Parts Catalog

Commercial Vehicle

ape City DLX P-L BS-III Step-II LAM HS

PIAGGIO VEHICLES PRIVATE LIMITED
Registered Office: Bund Garden Road ,Opp. Residency Club , Pune (India)

Print Date: 07-Apr-2022

PLATES INDEX

Sr No.	Plate Name	Plate No.	Page No.
1	Engine	1	1-2
2	CLUTCH COVER ASSEMBLY	2	3-4
3	CLUTCH ASSEMBLY	3	5-6
4	Lubrication Components	4	7-8
5	Complete Differential Gear	5	9-10
6	Differential Gear Group	6	11-12
7	Intake Fitting & Carburetor	7	13-16
8	Air Filter Assembly	8	17-18
9	Complete Crankcase	9	19-22
10	Gear Sector Assembly	10	23-24
11	Cylinder Head With I.P.	11	25-26
12	Crankshaft Assembly	12	27-28
13	Aircooling Circuit Components	13	29-30
14	Timing Group	14	31-32
15	Cylinder- Piston Group	15	33-34
16	Electric Starting Group	16	35-36
17	Speed Gear Group	17	37-38
18	Engine Support	18	39-42
19	FUEL TANK/FILTER/FUEL PIPES-PTL	19	43-44
20	FUEL TANK/FILTER/FUEL PIPES - GAS	20	45-46
21	Wind Shield/Glass/Beading	21	47-48
22	Main Frame/Battery Bkt/Jack Bkt	22	49-52
23	Inner Parts Of Cabin	23	53-54
24	REAR SUSPENSION	24	55-58
25	STEERING COLUMN AND FRONT SUSPENSION	25	59-62
26	Handle Bar And Control	26	63-66
27	Brake - Tandem Master Cylinder ,Brake Pipe And Hand Brakes	27	67-70
28	ELECTRICAL DEVICES	28	71-76
29	Front Fascia	29	77-80
30	PASSENGER AUTO RIKSHA BODY	30	81-86

Print Date: 07-Apr-2022

PLATES INDEX

Sr No.	Plate Name	Plate No.	Page No.
31	Wiring Harness	31	87-88
32	Front Brake Assembly	32	89-90
33	Rear Brake Assembly	33	91-92
34	Cables	34	93-94
35	LPG Kit	35	95-96
36	Two Stage LPG Regulator	36	97-98
37	Tools And Accessories	37	99-102
38	TOOL KIT	38	103-104
39	Carburetor Child Parts	7.1	105-106
40	LPG Kit for With filter solenoied valve	35.1	107-108

Print Date: 07-Apr-2022

PICTORIAL PLATES INDEX

PLATE-1 **Engine**

Page No. :1-2

PLATE-2 **CLUTCH COVER ASSEMBLY**

Page No. :3-4

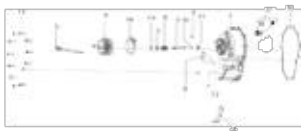

PLATE-3 **CLUTCH ASSEMBLY**

Page No. :5-6

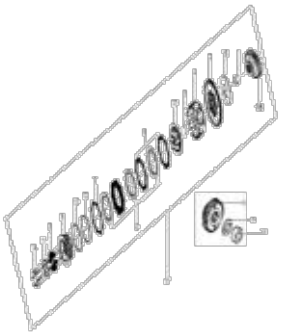

PLATE-4 **Lubrication Components**

Page No. :7-8

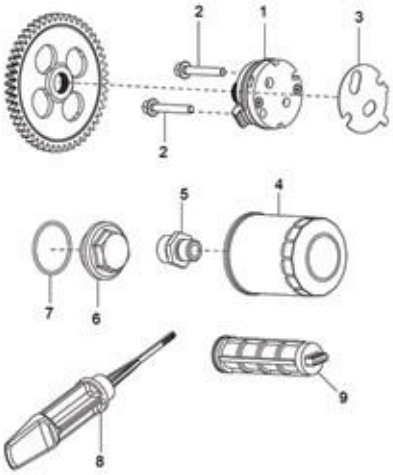

PLATE-5 **Complete Differential Gear**

Page No. :9-10

PLATE-6 **Differential Gear Group**

Page No. :11-12

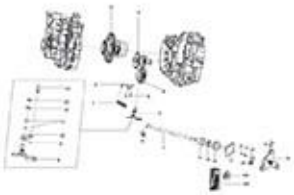

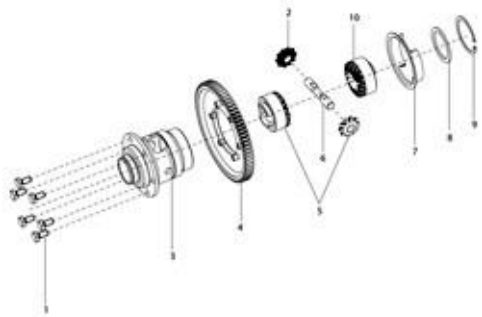

PLATE-7 Intake Fitting & Carburetor

Page No. :13-16

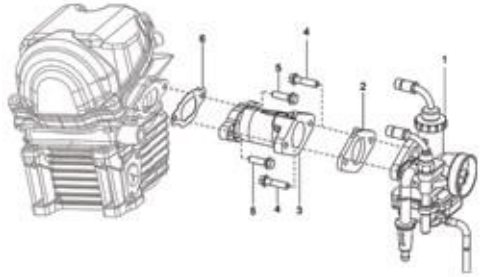

PLATE-8 Air Filter Assembly

Page No. :17-18

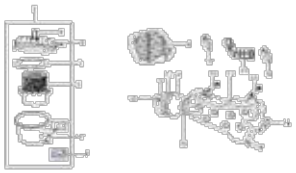

Print Date: 07-Apr-2022

PICTORIAL PLATES INDEX

PLATE-9 Complete Crankcase

Page No. :19-22

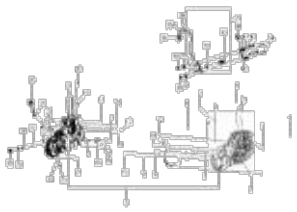

PLATE-10 Gear Sector Assembly

Page No. :23-24

PLATE-11 Cylinder Head With I.P.

Page No. :25-26

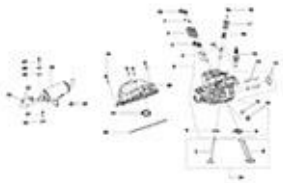

PLATE-12 Crankshaft Assembly

Page No. :27-28

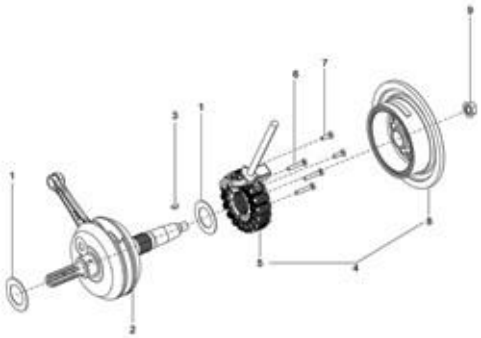

PLATE-13 Aircooling Circuit Components

Page No. :29-30

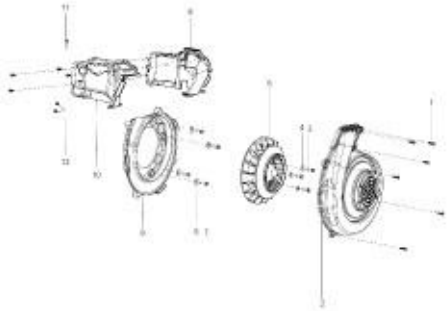

PLATE-14 Timing Group

Page No. :31-32

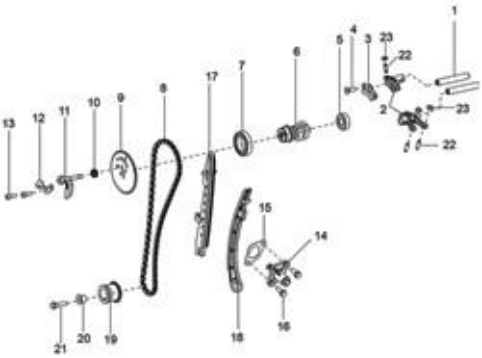

PLATE-15 Cylinder- Piston Group

PLATE-16 Electric Starting Group

Page No. :33-34

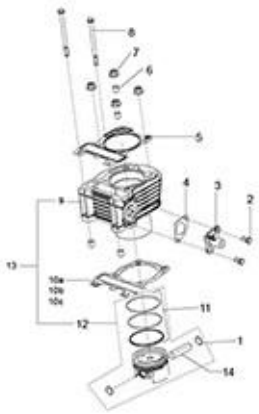

Page No. :35-36

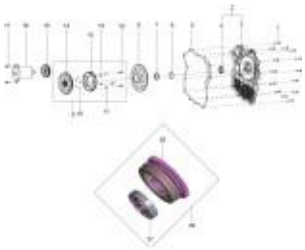

Print Date: 07-Apr-2022

PICTORIAL PLATES INDEX

PLATE-17 **Speed Gear Group**

Page No. :37-38

PLATE-18 **Engine Support**

Page No. :39-42

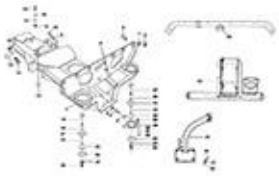

PLATE-19 **FUEL TANK/FILTER/FUEL PIPES-PTL**

Page No. :43-44

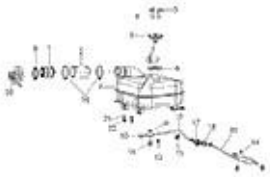

PLATE-20 **FUEL TANK/FILTER/FUEL PIPES - GAS**

Page No. :45-46

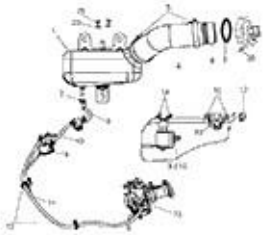

PLATE-21 **Wind Shield/Glass/Beading**

Page No. :47-48

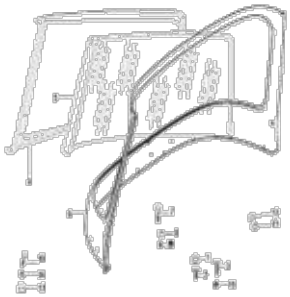

PLATE-22 **Main Frame/Battery Bkt/Jack Bkt**

Page No. :49-52

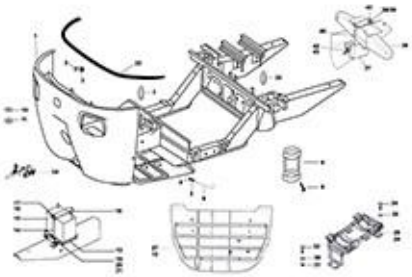

PLATE-23 **Inner Parts Of Cabin**

Page No. :53-54

PLATE-24 **REAR SUSPENSION**

Page No. :55-58

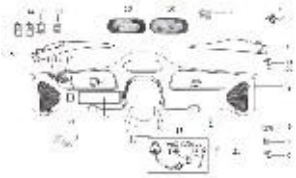

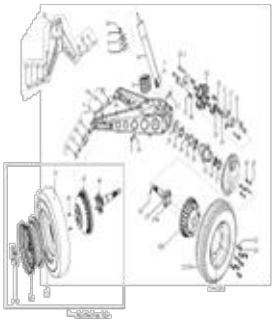

Print Date: 07-Apr-2022

PICTORIAL PLATES INDEX

PLATE-25 **STEERING COLUMN AND FRONT SUSPENSION**

Page No. :59-62

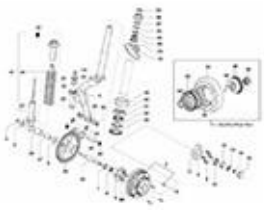

PLATE-26 **Handle Bar And Control**

Page No. :63-66

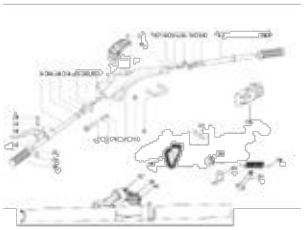

PLATE-27 **Brake - Tandem Master Cylinder ,Brake Pipe And Hand Brakes**

Page No. :67-70

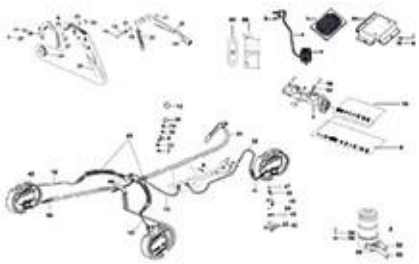

PLATE-28 **ELECTRICAL DEVICES**

Page No. :71-76

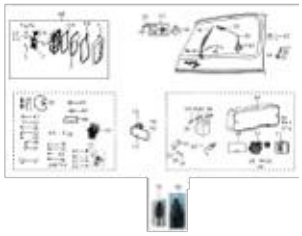

PLATE-29 **Front Fascia**

Page No. :77-80

PLATE-30 **PASSENGER AUTO RIKSHA BODY**

Page No. :81-86

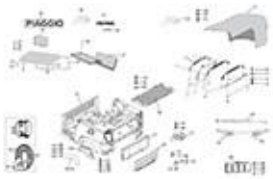

PLATE-31 **Wiring Harness**

Page No. :87-88

PLATE-32 **Front Brake Assembly**

Page No. :89-90

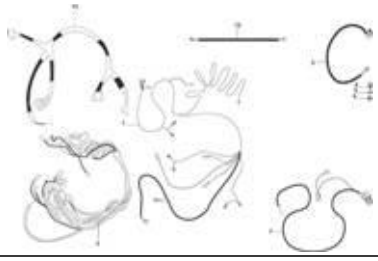

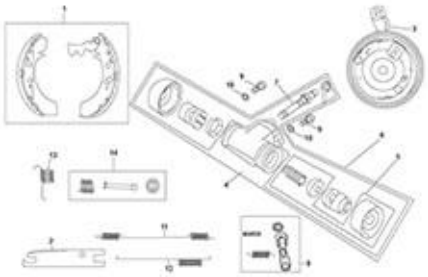

Print Date: 07-Apr-2022

PICTORIAL PLATES INDEX

PLATE-33 Rear Brake Assembly

Page No. :91-92

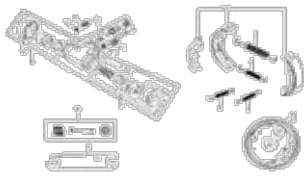

PLATE-34 Cables

Page No. :93-94

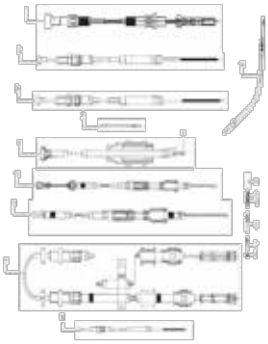

PLATE-35 LPG Kit

Page No. :95-96

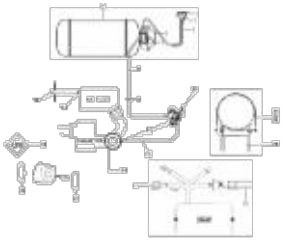

PLATE-36 Two Stage LPG Regulator

Page No. :97-98

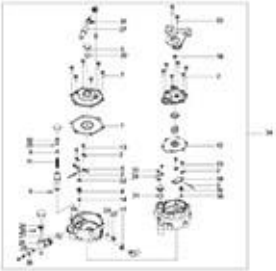

PLATE-37 Tools And Accessories

Page No. :99-102

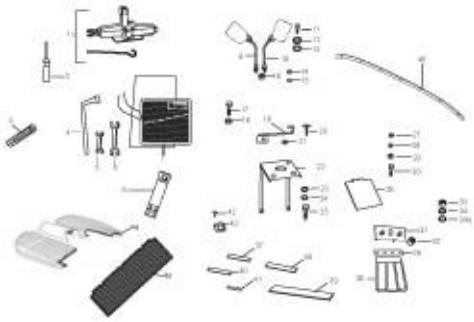

PLATE-38 TOOL KIT

Page No. :103-104

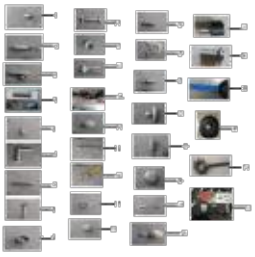

PLATE-7.1 Carburetor Child Parts

Page No. :105-106

PLATE-35.1 LPG Kit for With filter solenoied valve

Page No. :107-108

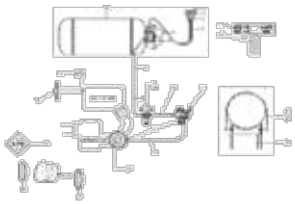

Print Date: 07-Apr-2022

PLATE-1
Engine

1

1

Print Date: 07-Apr-2022

PLATE-1

Engine

Fig. No.	Part No.	Description	Qty	Remarks
1	CM283917	ENG.200 4S/3V BSIII APE PAX PET EXP	1	PTL
2	CM283918	ENG.200 4S/3V BSIII APE PAX LPG EXP	1	LPG
3	CM283924	ENG.200 4S/3V BSIV APE PAX PETROL LAM	1	PETROL LAM (HS)
4	CM283925	ENG.200 4S/3V E2 APÃ? PAX LPG LAM	1	LPG LAM (HS)

2

Print Date: 07-Apr-2022

PLATE-2
CLUTCH COVER ASSEMBLY

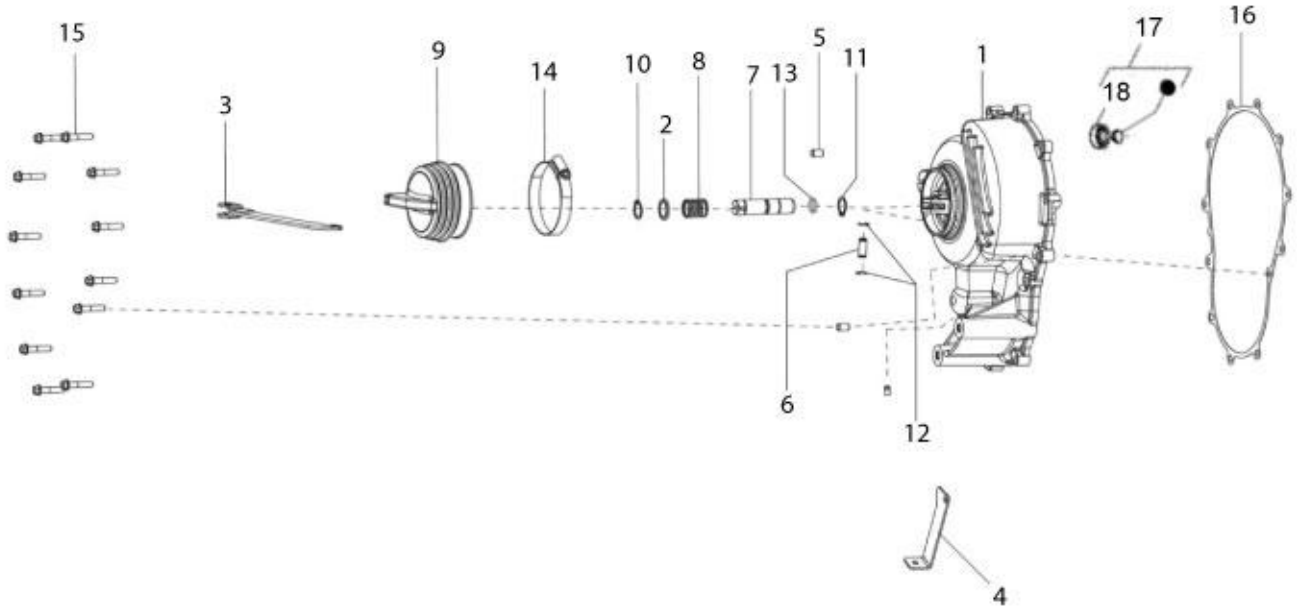
15
3
9
14
10
2
8
7
13
5
11
1
17
18
16
6
12
4

3

Print Date: 07-Apr-2022

PLATE-2
CLUTCH COVER ASSEMBLY

Fig. No.	Part No.	Description	Qty	Remarks
1	1A010136	CLUTCH COVER	1	
2	120164019	RETAINING PLATE	1	
3	127460010	LINK ASSLY - CLUTCH (IMPROVED)	1	
4	1A011461	SUPPORT BRACKET STARTER MOTOR CABLE	1	
5	1A000708	DOWEL (Ø7,5, H=12)	2	
6	127013013	PIN CLUTCH	1	
7	1A010548	PLUNGER SHAFT	1	
8	127185012	SPRING - CLUTCH COVER	1	
9	127012019	BELLOW CLUTCH ACTUATING	1	
10	842001600	CIRCLIP DIA.16(EXT)	1	
11	842001600	CIRCLIP DIA.16(EXT)	1	
12	843000809	CIRCLIP DIA.8(EXT) TYPE C	2	
13	B019220	O- RING (PLUNGER SHAFT)	1	
14	120170018	HOSE CLIP - CLUTCH COVER BELOW	1	
15	B018853	FLANGED HEXAGONAL HEAD SCREW M6X30	12	
16	1A011940	CLUTCH COVER GASKET	1	
17	SP1A010560	CLUTCH PRESSURE BUSH WITH I.P.	1	
18	478261	PULLEY SHAFT BEARING	1	

4

Print Date: 07-Apr-2022

PLATE-3
CLUTCH ASSEMBLY

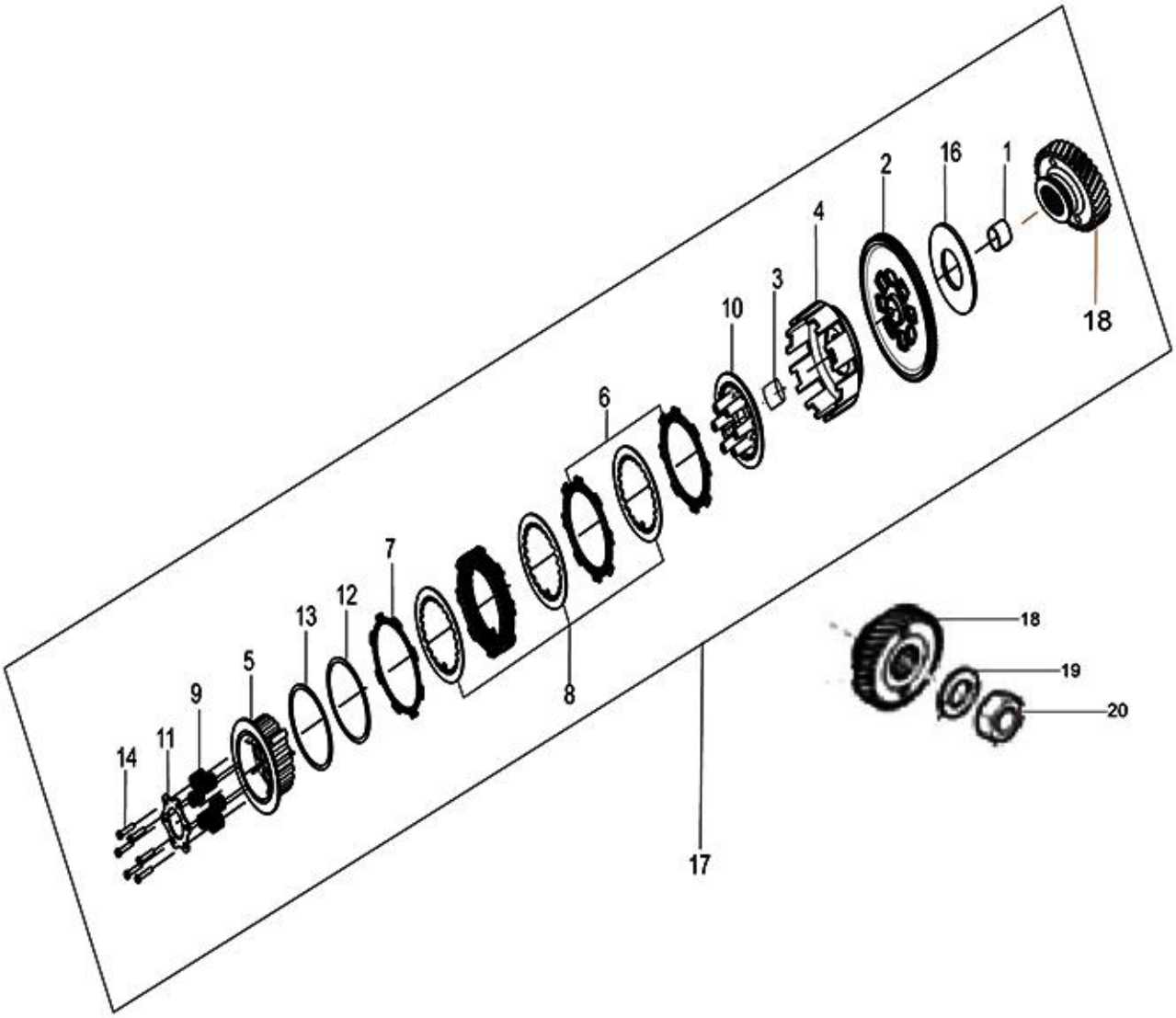
1
2
3
4
5
6
7
8
9
10
11
12
13
14
16
17
18
18
19
20

5

Print Date: 07-Apr-2022

PLATE-3
CLUTCH ASSEMBLY

Fig. No.	Part No.	Description	Qty	Remarks
1	1A010461	SPACER	1	
2	---	CLUTCH GEAR	1	Not Serviceable
3	1A010561	CLUTCH PRESSURE BUSH	1	
4	1A012150	HOUSING CLUTCH ASSY	1	
5	1A012152	HUB CLUTCH	1	
6	1A012153	FRICTION PLATE	6	
7	1A012154	RED FRICTION PLATE	1	
8	1A012155	PLATE CLUTCH	6	
9	1A012156	COMPRESSION SPRING	6	
10	1A012157	WHEEL CLUTCH	1	
11	1A012158	HOLDER CLUTCH	1	
12	1A012159	ANTI-JUDDER SPRING	1	
13	1A012160	ANTI-JUDDER WASHER	1	
14	1A012161	BOLT M5	6	
15	1A012151	PLATE CLUTCH ASSY	1	
16	B019420	CONICAL SPRING KNURLED WASHER	3	NS-Order on modi.assy.P/N.SP1A018746 INA
17	1A010119	CLUTCH ASSY	1	
18	1A010208	ENGINE GEAR	1	
19	B018464	BELLEVILLE SPRING	1	
20	1A012845	HEX. NUT M16X1.25	1	
21	KIT95131R	KIT CLUTCH PLATE SET FOR STEP-2 ENG. AF	1	Complete Clutch Plate Set (NI

6

Print Date: 07-Apr-2022

PLATE-4

Lubrication Components

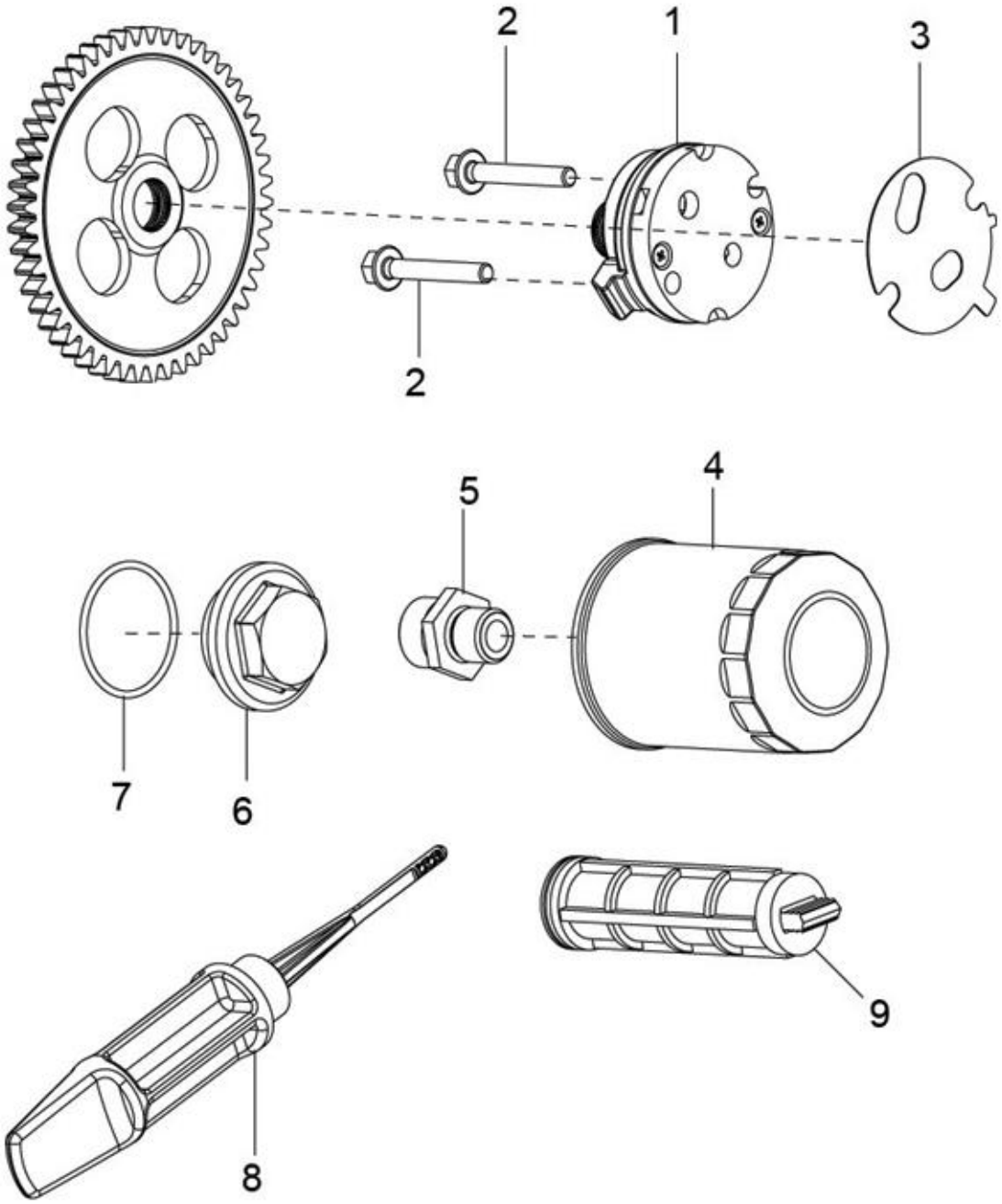
2
1
3
2
5
4
7
6
9
8

7

Print Date: 07-Apr-2022

PLATE-4

Lubrication Components

Fig. No.	Part No.	Description	Qty	Remarks
1	1A006877	OIL PUMP ASSY	1	
2	1A016737	FLANGED HEXAGONAL HEAD SCREW	2	
3	B015943	CRANKCASE/ OIL PUMP GASKET	1	
4	82635R	COMPLETE OIL FILTER	1	
5	1A009762	OIL FILTER SCREW	1	
6	B015598	OIL FILTER PLUG	1	
7	285536	O-RING GASKET 31.47X1.78	1	
8	1A007047	OIL DIPSTICK COMPLETE	1	
9	1A006812	COMPLETE INTAKE OIL FILTER	1	

8

Print Date: 07-Apr-2022

PLATE-5

Complete Differential Gear

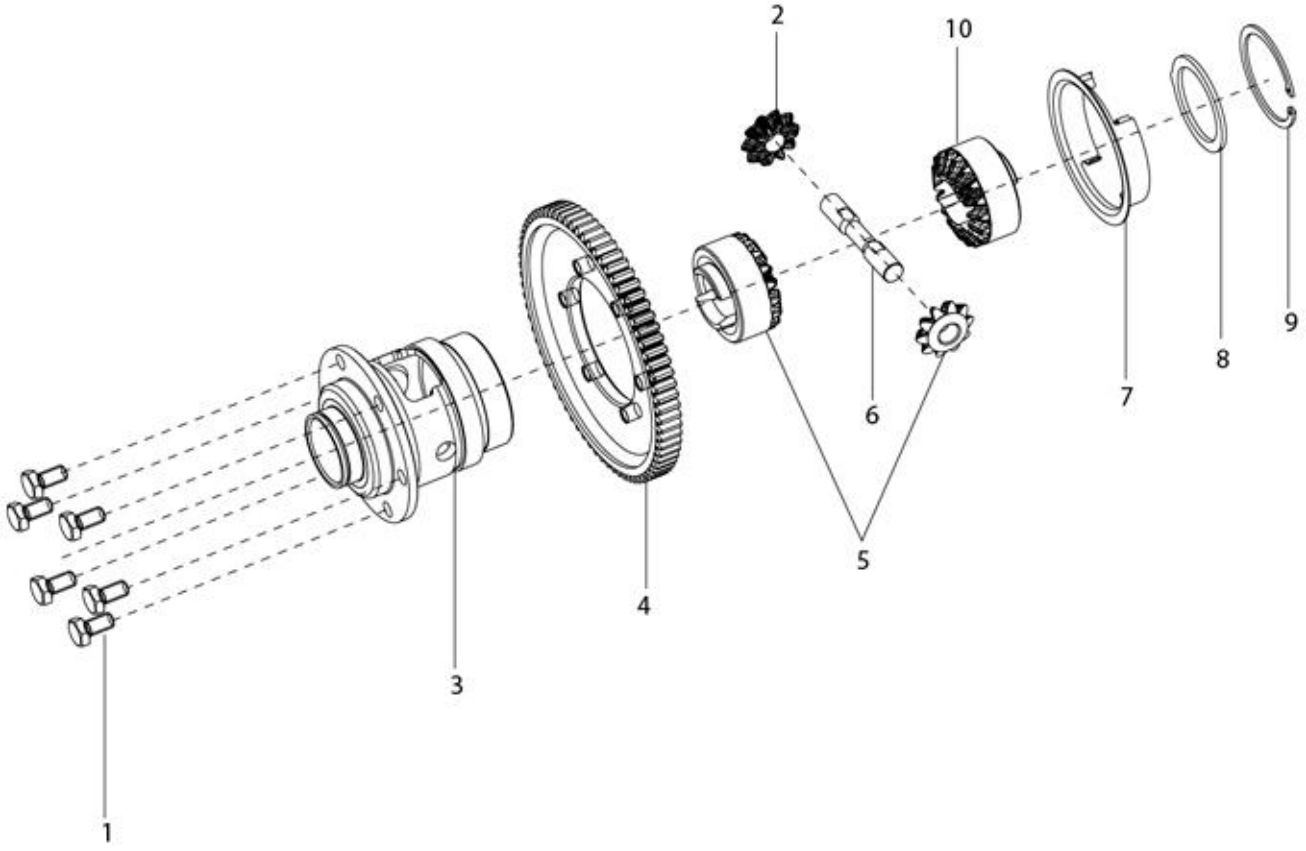
2
10
9
8
7
6
5
4
3
1

9

Print Date: 07-Apr-2022

PLATE-5

Complete Differential Gear

Fig. No.	Part No.	Description	Qty	Remarks
1	B016774	FLANGED HEXAGONAL SCREW M6X25	6	
2	NS-	NOT SERVICEABLE PART	3	Serviceable as Kit - 940028
3	288730	DIFFERENTIAL CAGE	1	
4	CM308301	DIFFERENTIAL CROWN -PTL/LPG	1	
4	CM308302	DIFFERENTIAL CROWN	1	LAM/HS (PTL&LPG)
5	940028	GEAR SUN AND DIFFERENTIAL GEAR	1	
6	132129	PIN	1	
7	132244	STOPPER THK=1.0	1	
8	220575	WASHER 65X3	1	
9	132134	CIRCLIP	2	
10	NS-	NOT SERVICEABLE PART	2	Serviceable as Kit - 940028

10

Print Date: 07-Apr-2022

PLATE-6

Differential Gear Group

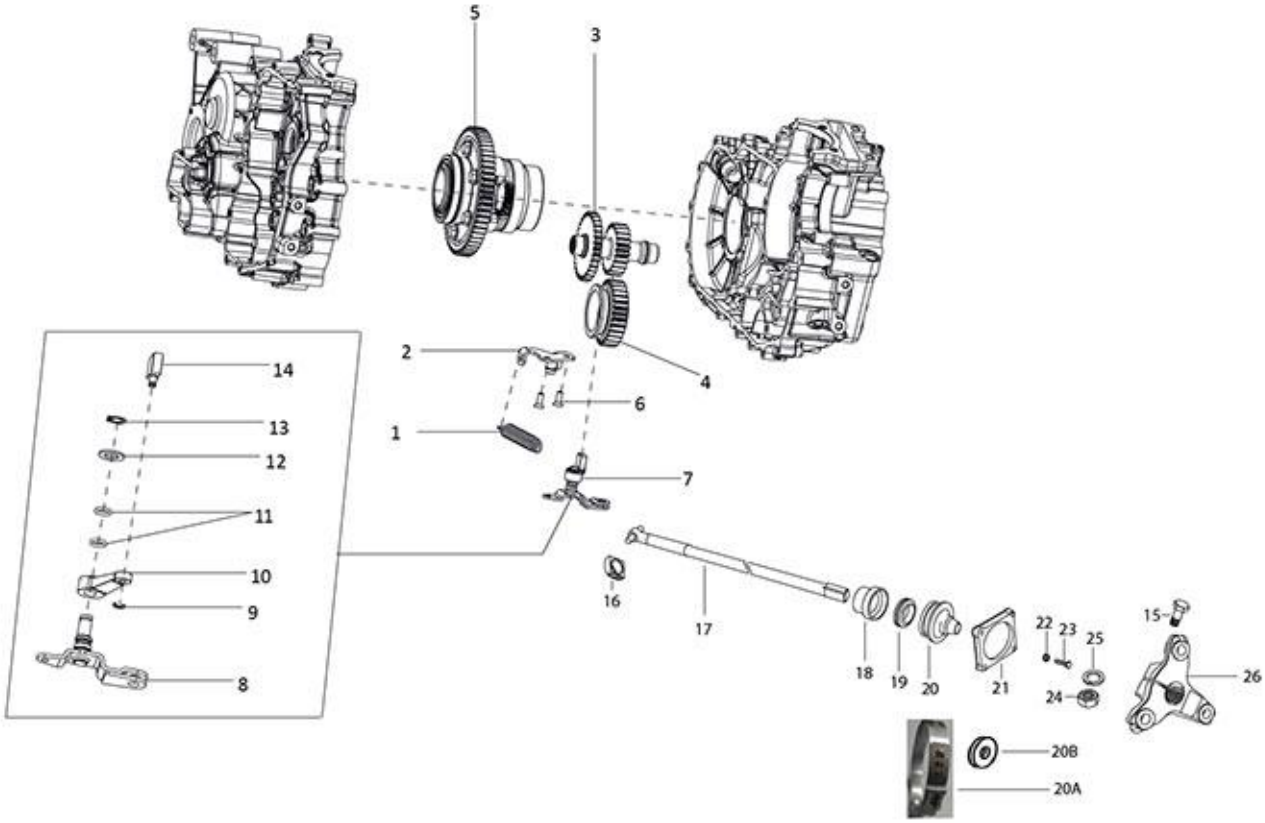
5
3
2
4
6
1
7
14
13
12
11
10
9
8
16
17
18
19
20
21
22
23
25
24
15
26
20B
20A

11

Print Date: 07-Apr-2022

PLATE-6

Differential Gear Group

Fig. No.	Part No.	Description	Qty	Remarks
1	127111011	REVERSE GEAR SPRING	1	
2	1A008804	REVERSE CABLE REACTION BRACKET	1	
3	1A006806	REVERSE GEAR -PTL/LPG	1	
3	1A008547	REVERSE GEAR- CNG	1	LAM/HS (PTL&LPG)
4	1A009779	SLIDING GEAR(PTL AND LPG)	1	PTL/LPG
4	1A010632	SLIDING GEAR	1	LAM/HS (PTL&LPG)
5	SPCM308401	COMPLETE DIFFERENTIAL GEAR- SPD	1	PTL/LPG
5	SPCM308402	COMPLETE DIFFERENTIAL GEAR	1	LAM/HS (PTL&LPG)
6	1A016964	CSK PHILIPS HEAD SCREW	2	
7	SP1A007579	COMPL. INVERTER LEVER SECTOR(BSIV)- SPD	1	
8	1A009093	INVERTER LEVER SECTOR WITH P.I.	1	
9	843000500	CIRCLIP DIA.5 (EXT) TYPE C	1	
10	1A007605	GEAR SHIFTER LEVER	1	
11	1A005176	O- RING	2	
12	1A007501	PLANE WASHER	1	
13	6410	CIRCLIP	1	
14	1A007051	SLIDER	1	
15	B024614	HEX HEAD BOLT M10X45 CL 10.9	2	
16	112867R	SLIDER BLOCK PROP. SHAFT	4	
17	B023940	PROP. SHAFT S/A	2	
18	113278	BRACKET RETAINER RING (41736)	2	
19	6C000312R	SEAL RING	2	
20	6C000016	BELLOW	2	
20A	6C000041	OTIKAR CLAMP FOR BELLOW	2	
20B	3056	PLAIN WASHER M6 OD12	6	
21	111356	COVER	2	
22	016406	SPRING WASHER	2	
23	31092	HEX. HD SCREW M6X25	2	
24	231370	SELF BREAKING NUT M10	2	
25	16410	SPRING WASHER	2	
26	111498	ELASTIC HUB	2	

12

Print Date: 07-Apr-2022

PLATE-7

Intake Fitting & Carburetor

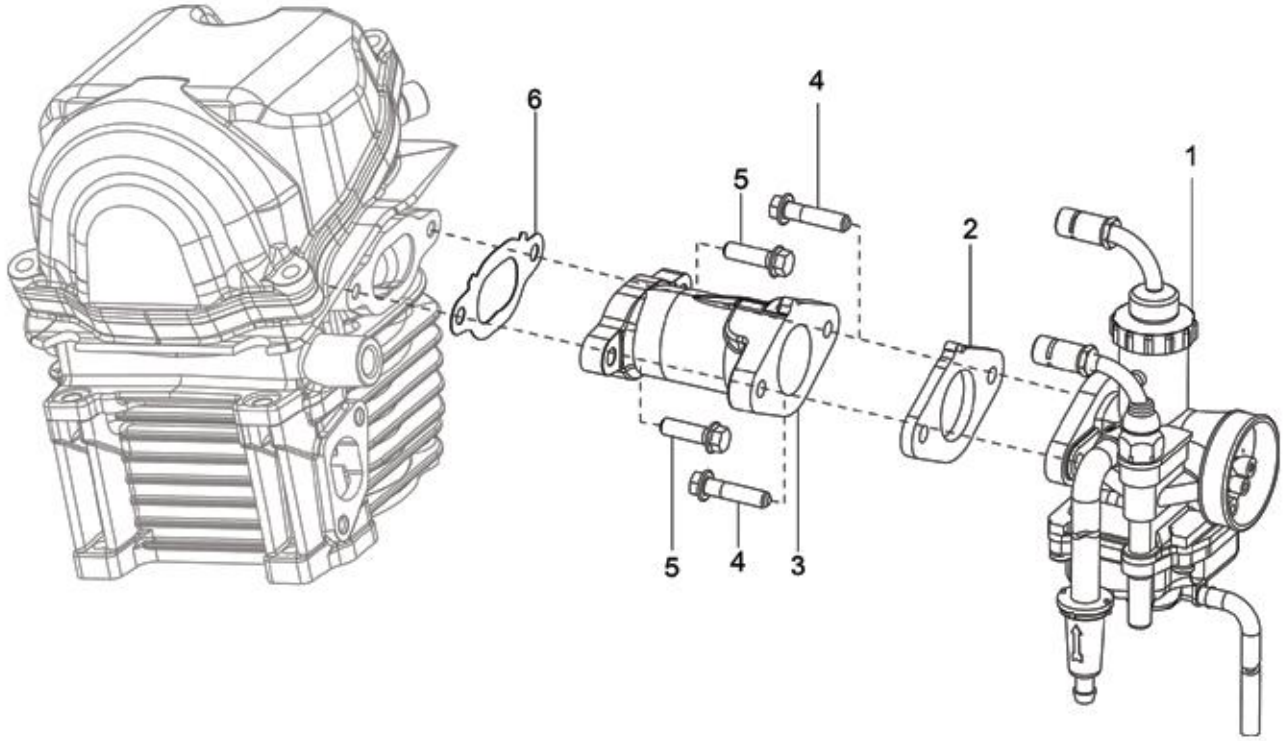
6
4
5
1
2
5
4
3

13

Print Date: 07-Apr-2022

PLATE-7

Intake Fitting & Carburetor

Fig. No.	Part No.	Description	Qty	Remarks
1	CM284101	CARBURETTOR UVD 22-PETROL	1	PTL
1	CM166102	CARBURETOR UVD 22-LPG	1	LPG
2	B015543	COMPLETE INTAKE FITTING SUPPORT	1	PTL
2	B016016	INTAKE FITTING GASKET WITH O-RING	1	CNG/LPG
3	1A009632	INTAKE FITTING-PLT	1	PTL
3	1A007409	INTAKE FITTING-LPG/CNG	1	LPG
4	B016774	FLANGED HEXAGONAL SCREW M6X25	2	
5	018639	SCREW M6X20	2	
6	B018442	INTAKE FITTING GASKET	1	
7	1A010091	COMPLETE FLOAT	1	PTL (N.I)
8	1A010092	COMPLETE BODY FLOAT CHAMBER	1	PTL (N.I)
9	1A010095	FLOAT CHAMBER GASKET	1	PTL (N.I)
10	1A010023	NEEDLE JET	1	PTL (N.I)
11	1A010024	NEEDLE JET HOLDER	1	PTL (N.I)
12	1A010088	MAXIMUM JET	1	PTL (N.I)
13	1A010089	MINIMUM JET	1	PTL (N.I)
14	1A010096	SCREW DRAIN	1	PTL (N.I)
15	1A010097	THROTTLE VALVE	1	PTL (N.I)
16	1A010098	JET NEEDLE	1	PTL (N.I)
17	1A010100	PISTON SPRING	1	PTL (N.I)
18	1A010090	VALVE COMPLETE FLOAT	1	PTL (N.I)
19	1A010101	TOP COMPLETE-PTL	1	PTL (N.I)
20	1A011914	KIT STARTER DEVICE	1	PTL (N.I)
21	1A010025	PILOT SCREW	1	PTL (N.I)
22	1A010026	PLANE WASHER	1	PTL (N.I)
23	1A010102	STOP SCREW AND SPRING	1	PTL (N.I)
24	B016823	FLOAT	1	LPG (N.I)
25	CM167902	DIFFUSER	1	LPG (N.I)
26	CM167708	MAXIMUM JET	1	LPG (N.I)
27	CM167802	PILOT JET (CNG/LPG)	1	LPG (N.I)
28	B016822	FLOAT CHAMBER BODY ASSY KIT	1	LPG (N.I)
29	B016827	THROTTLE VALVE	1	LPG (N.I)
30	B016829	SPRING (PV)	1	LPG (N.I)
31	B016834	FLOAT CHAMBER GASKET	1	LPG (N.I)
32	B016869	CABLE ADJUSTER KIT	2	LPG (N.I),UCAL Make carburetor

14

Print Date: 07-Apr-2022

PLATE-7

Intake Fitting & Carburetor

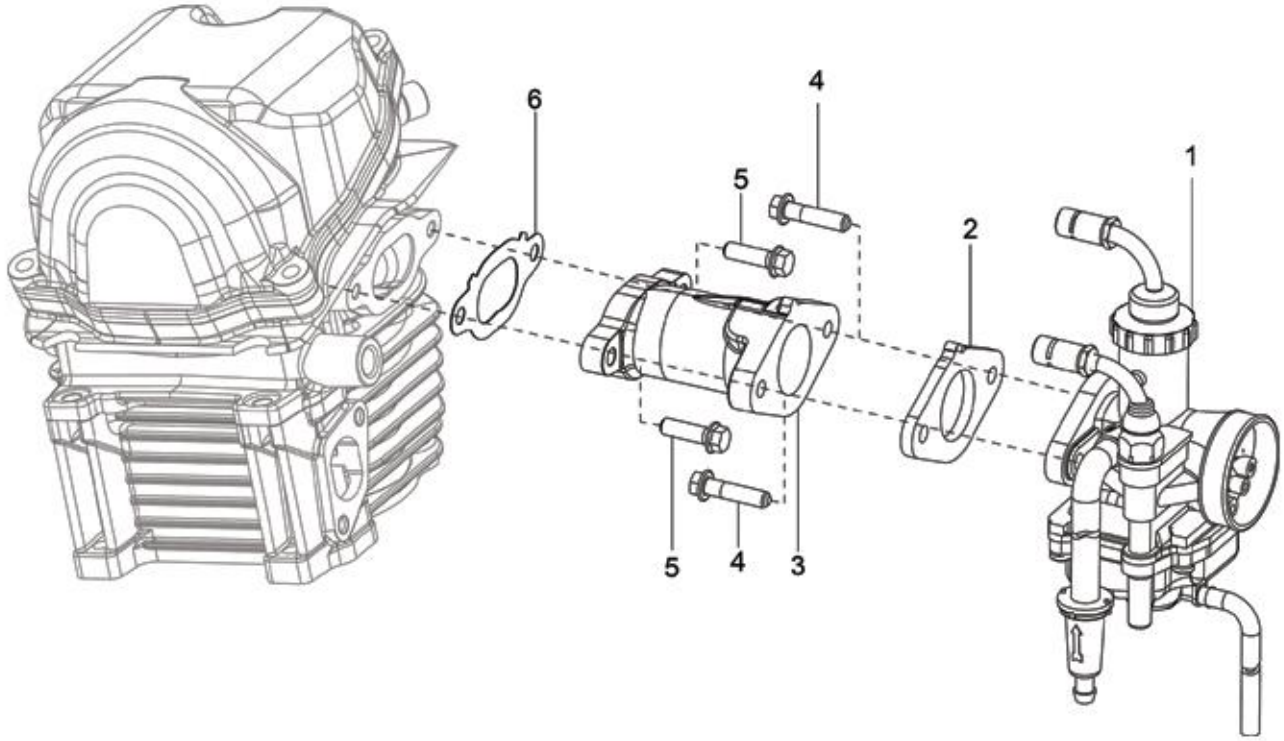
6
4
5
1
2
5
4
3

15

Print Date: 07-Apr-2022

PLATE-7

Intake Fitting & Carburetor

Fig. No.	Part No.	Description	Qty	Remarks
33	B017542	NEEDLE VALVE	1	LPG (N.I)
34	B016825	GAS VALVE COVER KIT	1	LPG (N.I),UCAL Make carburetor
35	1A000542	STARTER KIT	1	LPG (N.I)
36	B016828	IDLE ADJUSTER KIT	1	LPG (N.I),UCAL Make carburetor
37	1A007409	INTAKE FITTING-LPG/CNG	1	LPG (N.I)

16

Print Date: 07-Apr-2022

PLATE-8

Air Filter Assembly

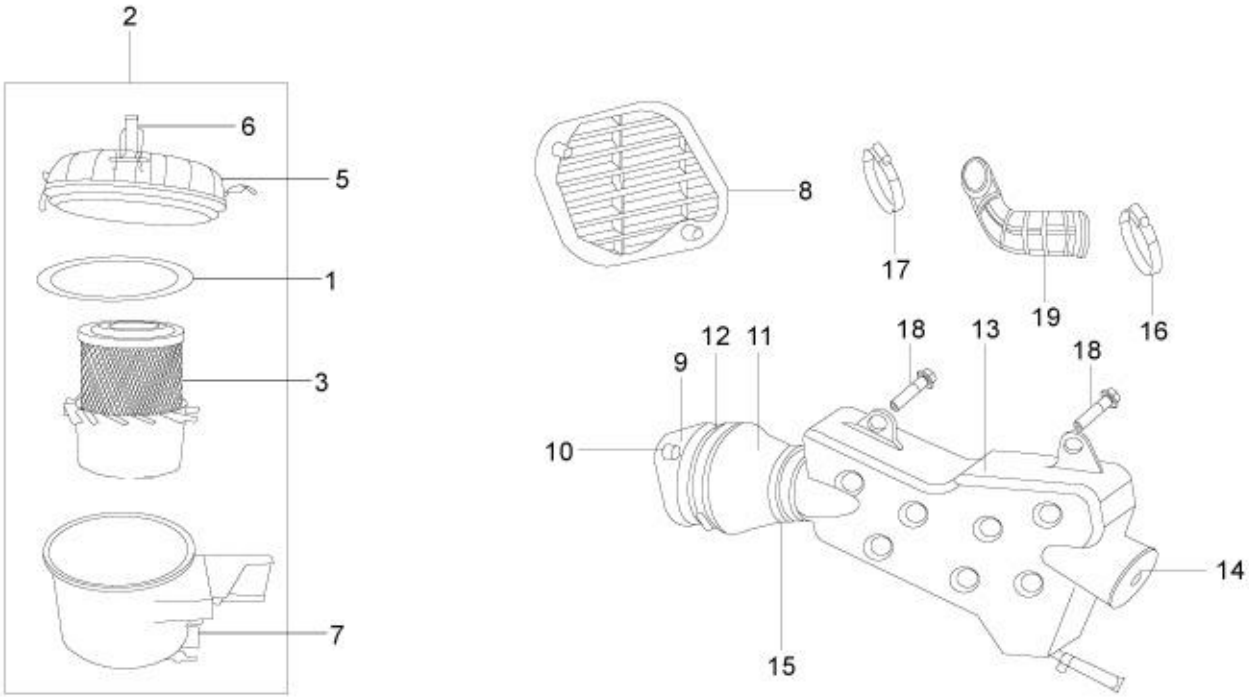
2
6
5
1
3
7
8
17
19
16
18
13
18
12
11
9
10
14
15

17

Print Date: 07-Apr-2022

PLATE-8

Air Filter Assembly

Fig. No.	Part No.	Description	Qty	Remarks
1	940072	AIR FILTER COVER GASKET	1	
2	6A000199	AIR FILTER ASSLY. (WITH MTG. BKT.)	1	PTL
2	B075971	AIR FILTER ASSLY. (WITH MTG. BKT.)- LPG	1	LPG
2	B073441	AIR FILTER ASSLY.W/O BKT	1	PTL/LPG
3	B076112	AIR FILTER ELEMENT	1	
4	940071	DUST VALVE	1	NI
5	940069	AIR FILTER COVER-(UG)	1	
6	920088	CLAMP	3	
7	1A007492	AIR RESTRICTOR	1	PTl
7	6A000200	AIR RESTRICTOR	1	HS PTL
8	B074971	INTAKE GRILL FOR SNORKEL SYSTEM	1	
9	B074970	ADAPTER FOR SNORKEL AIR INTAKE	1	
10	D9004159230	SCREW, W / WASHER	2	
11	1A006592	AIR CLEANER/VEHICLE MANIFOLD	1	
12	1A007153	HOSE CLAMP	1	
13	1A006593	PIPE COOL AIR INTAKE	1	
14	1A007634	DAMPING RING	1	LPG
15	1A007152	HOSE CLAMP	1	
16	1A007152	HOSE CLAMP	1	
17	604553	WORM CLIP	1	
18	645037	HEX HEAD SCREW M8 X 22 CL 8.8	3	
19	1A007489	AIR CLEANER/VEHICLE MANIFOLD	1	

18

Print Date: 07-Apr-2022

PLATE-9

Complete Crankcase

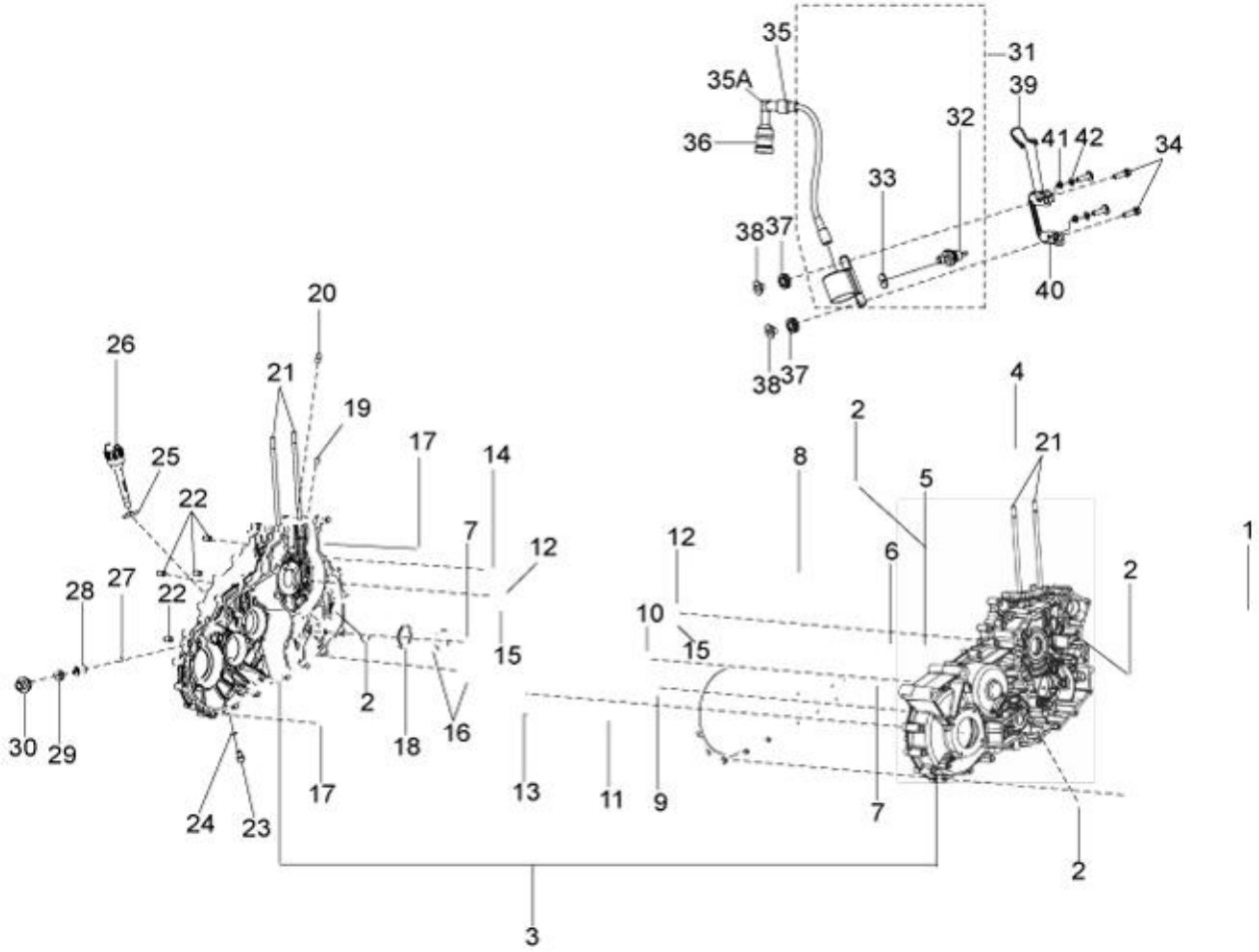
35
31
35A
39
32
36
41
42
34
33
38
37
40
38
37
20
26
21
19
4
2
17
14
21
25
8
5
22
7
12
12
6
1
28
27
22
2
10
15
15
2
18
16
30
29
17
13
11
9
7
24
23
2
3

19

Print Date: 07-Apr-2022

PLATE-9

Complete Crankcase

Fig. No.	Part No.	Description	Qty	Remarks
1	432142	HEXAGONAL RANGE HEAD SCREW (M6X35)	30	
2	1A011246	TAPER THREAD PLUG	4	
3	SP940097	COUPLED CRANKCASE WITH STUB BRG BSIV-SPD	1	
4	1A007774	DOWEL	1	
5	485655	SPRING FOR OIL PRESSURE VALVE	1	
6	829661	OIL PRES.VALVE	1	
7	B042486	BUSH	2	
8	1A006856	HALF-CRANKCASES GASKET	1	
9	1A007028	ROLLER BEARING	1	
10	884222808	NEEDLE BUSH 22X28X12	1	
11	7066R	RADIAL BALL BEARING	1	
12	1A007663R	CRANKSHAFT STUB UPPER HALF BEARING	2	Service on colorwise set KIT95007R/7Y/7B
13	111353	CIRCLIP	1	
14	878941	CONNECTION PIPE	1	
15	1A007664R	CRANKSHAFT STUB LOWER HALF BEARING	2	Service on colorwise set KIT95007R/7Y/7B
16	1A007026	BALL BEARING	2	
17	B015592	REFERENCE DOWEL (D.9,5 H=15)	2	
18	1A002685	SEAL RING 35X47X6	1	
19	1A000612	RETAINER SCREW - PRE COATED	1	
20	1A008823	PISTON COOLING JET	1	
21	B014755	STUD SCREW	4	
22	1A000708	DOWEL (Ø7,5, H=12)	4	
23	269755	SOCKET HEAD SCREW (M8X12)	1	
24	485703	WASHER	1	
25	127016015	DIPSTICK SEALING WASHER	1	
26	112898	OIL LEVEL ARM WITH PLUG	1	Old
26	1A007047	OIL DIPSTICK COMPLETE	1	
27	165121014	PIN	1	
28	117401	BUSH	1	
29	117402	OIL SEAL	1	
30	1A010720	SPEEDOMETER GEAR	1	
30a	1A008559	BUSH (SPEEDOMETER GEAR)	1	NI
31	1A001794	COMPLETE H.T.COIL	1	
32	1D001138	MINIMUM PRESSURE OIL SWITCH	1	
33	1A011500	WASHER	1	

20

Print Date: 07-Apr-2022

PLATE-9

Complete Crankcase

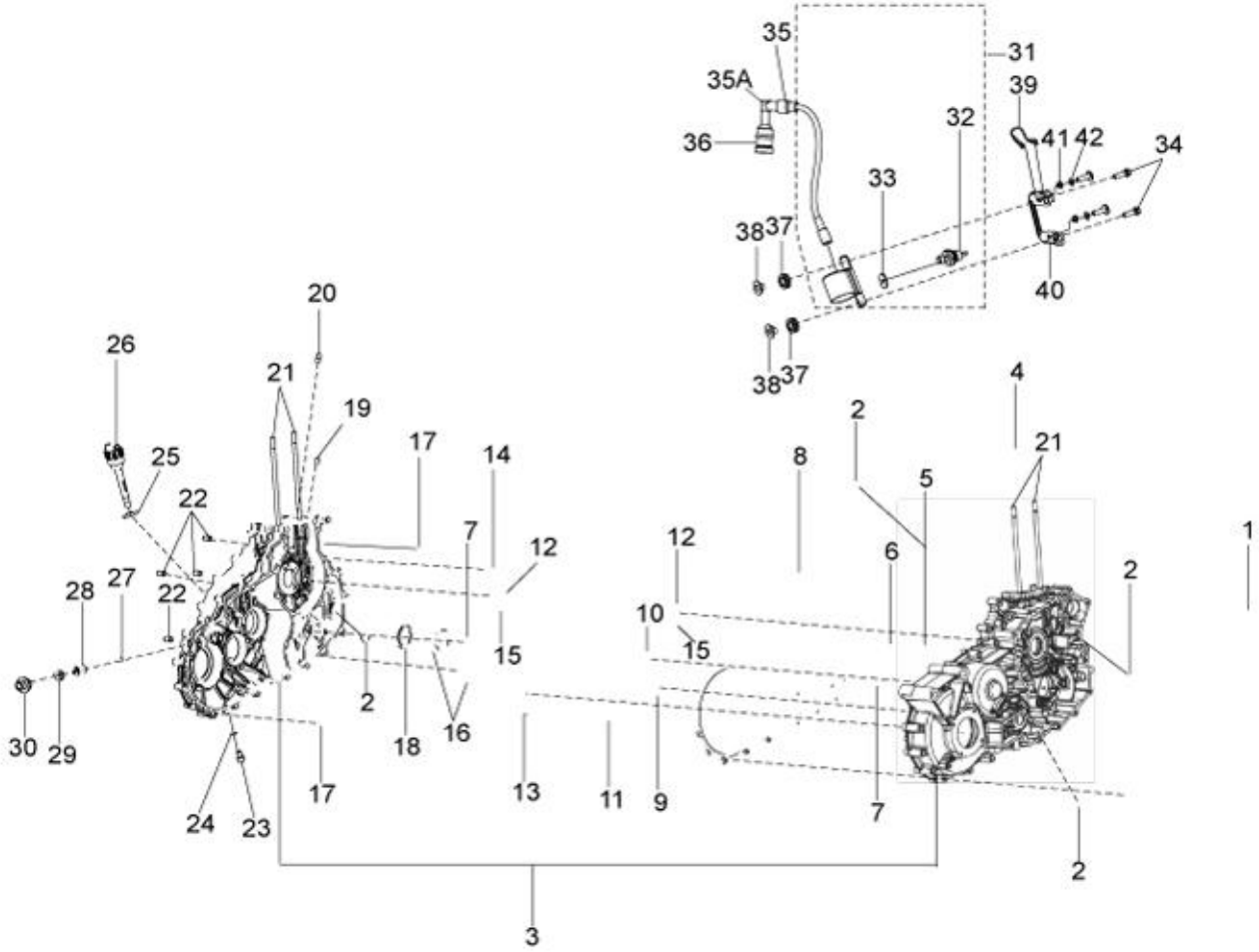
35
31
35A
39
32
36
41
42
34
33
38
37
40
38
37
20
26
21
19
4
2
17
14
21
25
8
5
22
7
12
12
6
1
28
27
22
2
10
15
15
2
30
29
18
16
17
13
11
9
7
24
23
2
3

21

Print Date: 07-Apr-2022

PLATE-9

Complete Crankcase

Fig. No.	Part No.	Description	Qty	Remarks
34	018639	SCREW M6X20	2	
35	642537	PROTECTION CAP	1	
35A	643149	SPARK PLUG CAP	1	
36	1A001795	SPARK PLUG PROTECTION COLLAR	1	
37	B014063	BUFFER DAMPER	2	
38	B014066	SPACER	2	
39	643156	GROUND WIRE	1	
40	B016552	COIL SUPPORT BRACKET WITH I.P.	1	
41	872816	FLANGED NUT	2	
42	013880	PLAIN WASHER	2	
43	KIT96028R	ENGINE GASKET SET APECITY BS3/4 STEP-2	1	NI
47	KIT95007R	CRANKSHAFT BEARING SET_RED COLOUR	1	Red color bearing set(consist Of sr no 12,15)
48	KIT95007Y	CRANKSHAFT BEARING SET_YELLOW COLOUR	1	Yellow color bearing set(consist. Of sr no 12,15)
49	KIT95007B	CRANKSHAFT BEARING SET_BLUE COLOUR	1	Blue color bearing set(consist. Of sr no 12,15)

22

Print Date: 07-Apr-2022

PLATE-10

Gear Sector Assembly

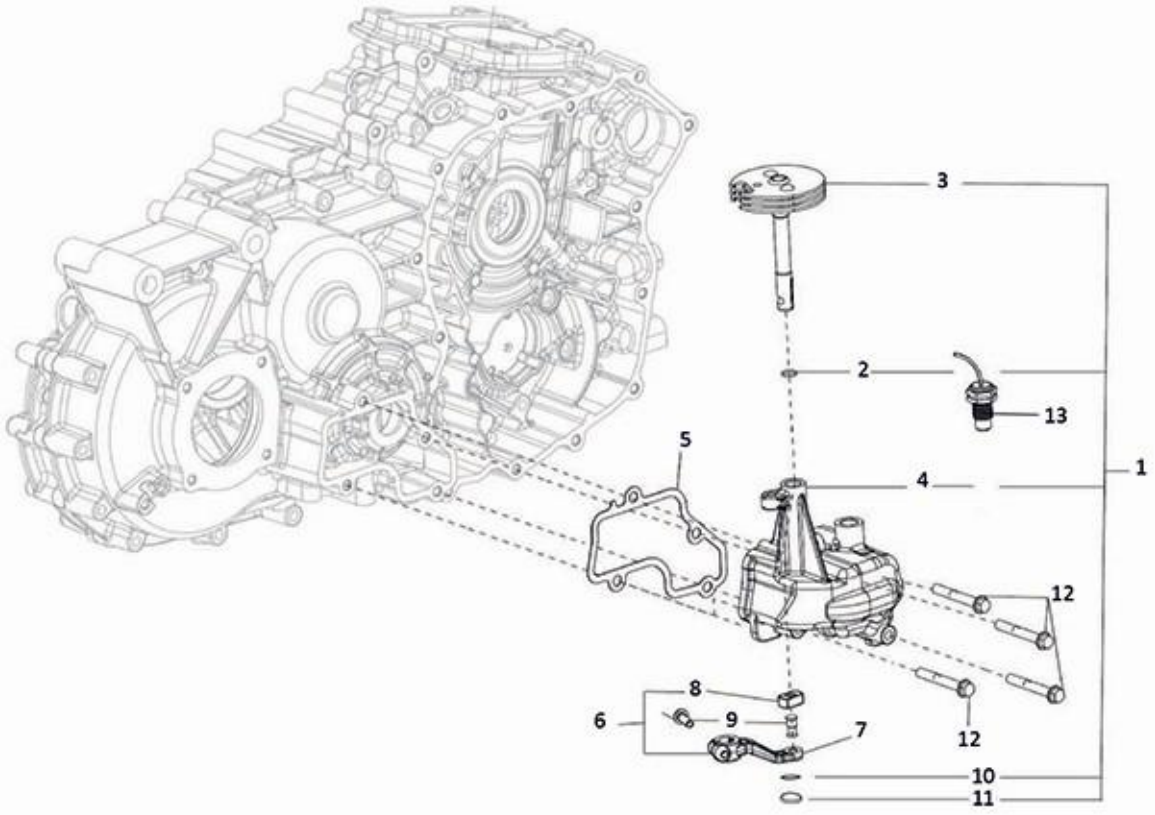
3
2
13
5
4
1
12
8
6
9
7
12
10
11

23

Print Date: 07-Apr-2022

PLATE-10

Gear Sector Assembly

Fig. No.	Part No.	Description	Qty	Remarks
1	SP1A011650	COMPLETE GEAR SHIFTER ASSY	1	
2	1A005178	O- RING	1	
3	1A010035	COMPLETE SECTOR WITH SHAFT	1	
4	1A012182	GEAR SHIFTER HOUSING	1	
5	1A012334	GASKET GEAR SHIFTER HOUSING	1	
6	SP1A007579	COMPL. INVERTER LEVER SECTOR(BSIV)- SPD	1	
7	1A012039	GEAR SHIFT LEVER	1	
8	1A010187	SLIDER BLOCK	1	
9	1A012011	PIN	1	
10	009101	SEEGER RING	1	
11	1A006701	LOCK WASHER	1	
12	B016611	FLANGED HEX. HEAD SCREW M6X45 CL10	4	
13	1A010016	NEUTRAL SWITCH	1	
14	1A012182	GEAR SHIFTER HOUSING	1	

24

Print Date: 07-Apr-2022

PLATE-11

Cylinder Head With I.P.

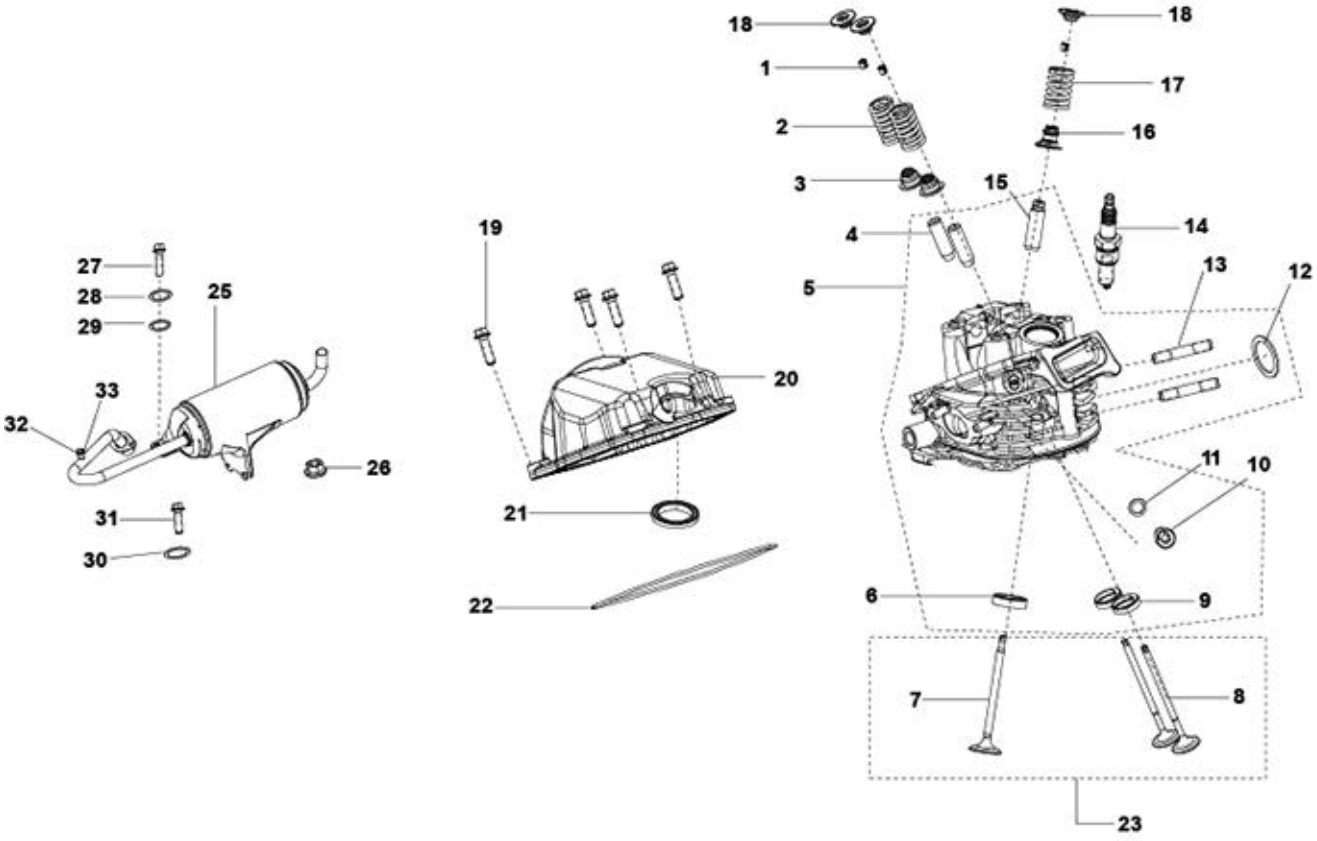
18
18
1
17
2
16
3
15
14
4
19
13
12
5
27
28
29
25
20
33
32
26
11
10
31
21
30
22
6
9
7
8
23

25

Print Date: 07-Apr-2022

PLATE-11

Cylinder Head With I.P.

Fig. No.	Part No.	Description	Qty	Remarks
1	B015288	HALF-CONE	3	
2	B014706	VALVE SPRING (INTAKE)	2	
3	843307	VALVE SEAL RING	2	
3A	1A012925	SLIDING WASHER	2	NI
4	NS	NOT SERVICEABLE	2	
5	SP1A012928	CYLINDER HEAD ASSY	1	
6	B017336	EXHAUST VALVE SEAT	1	
7	B017438	EXHAUST VALVE Ø22	1	
8	B014684	INTAKE VALVE Ø20	2	
9	B017230	INTAKE VALVE SEAT	2	
10	269755	SOCKET HEAD SCREW (M8X12)	1	
11	485703	WASHER	1	
12	434716	CYLINDER HEAD/MUFFLER GASKET	1	
13	B016368	SPECIAL STUD	2	
14	643367	SPARK PLUG	1	
15	NS	NOT SERVICEABLE	1	
16	83054R	VALVE SEAL RING	1	
17	B014705	VALVE SPRING (EXHAUST)	1	
18	B017456	UPPER CUP	3	
19	1A002691	FLANGED HEX HEAD SCREW M6X20 CL10	1	
20	1A006545	HEAD COVER	4	
21	B014732	SPARK PLUG HOLE GASKET	1	
22	B018533	CYLINDER HEAD COVER GASKET	1	
23	KIT1U000020	SET OF VALVES	1	
24	NS	NOT SERVICEABLE	1	
25	1A009706	COMPLETE MUFFLER	1	PTL/LPG
26	436947	FLANGED NUT M7X1 H=8	2	
27	30074	HEX HEAD BOLT M8 X 40 CL 8.8	2	
28	016408	SPRING WASHER	2	
29	3056	PLAIN WASHER M6 OD12	2	
30	016406	SPRING WASHER	2	
31	31089	HEX HEAD SCREW M6X18 CL 8.8	2	
32	433122	SCREW M10X6	1	
33	016195	WASHER	1	

26

Print Date: 07-Apr-2022

PLATE-12
Crankshaft Assembly

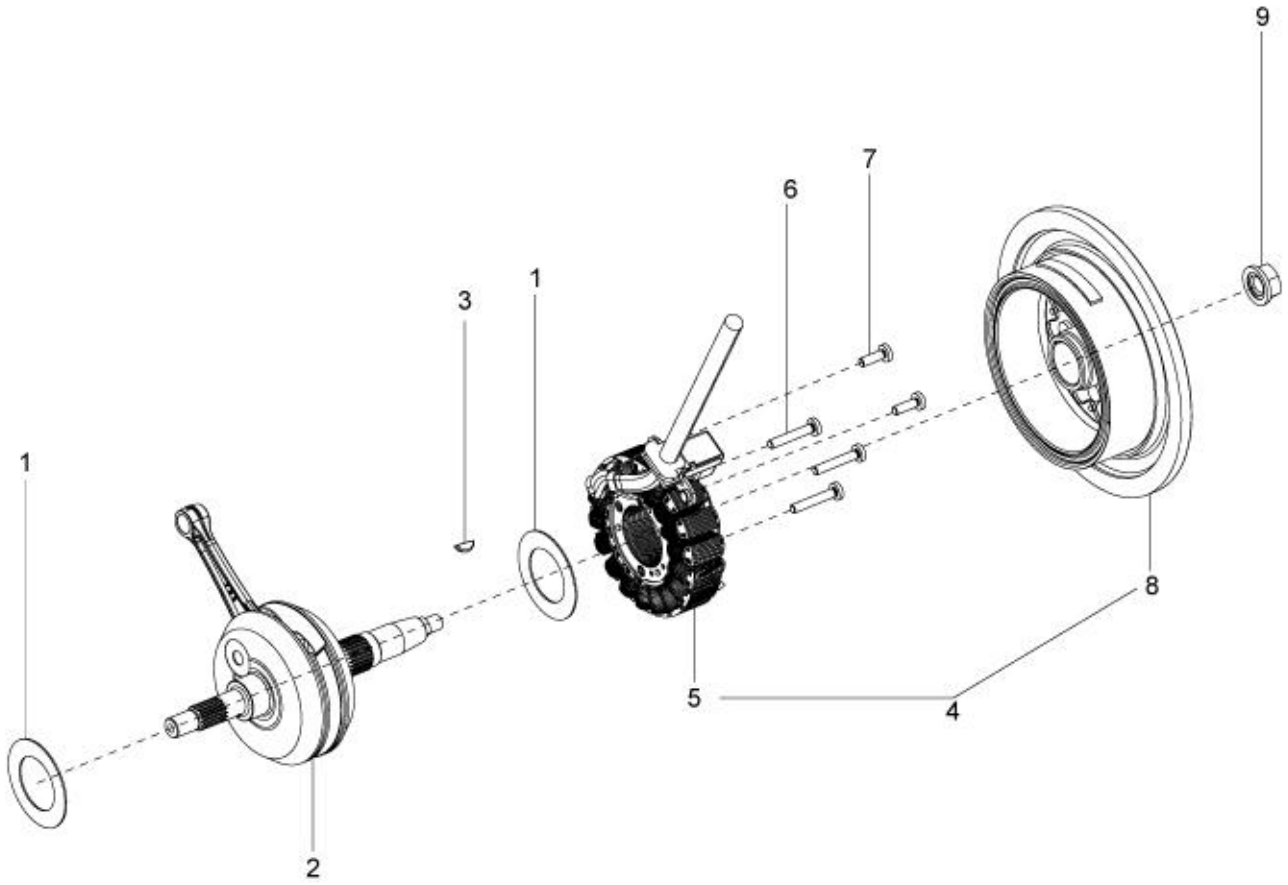
9
7
6
1
3
1
8
5
4
2

27

Print Date: 07-Apr-2022

PLATE-12

Crankshaft Assembly

Fig. No.	Part No.	Description	Qty	Remarks
1	B016144	WASHER	2	
2	1A010150	CRANKSHAFT ASSEMBLY	1	
3	000267	WOODRUFF KEY	1	
4	1D001847	COMPLETE A.C.GENERATOR	1	
5	1D001846	COMPLETE STATOR	1	
6	1A001073	TORX HEAD SCREW M5X16	3	
7	1A013159	TORX HEAD SCREW M5X22	2	
8	1A008672	ROTAR ASSY WITH HUB	1	NS
9	1A006988	NUT WITH SPRING WASHER	1	
10	1A006002	DOWEL	1	Not app. (NI)

28

Print Date: 07-Apr-2022

PLATE-13

Aircooling Circuit Components

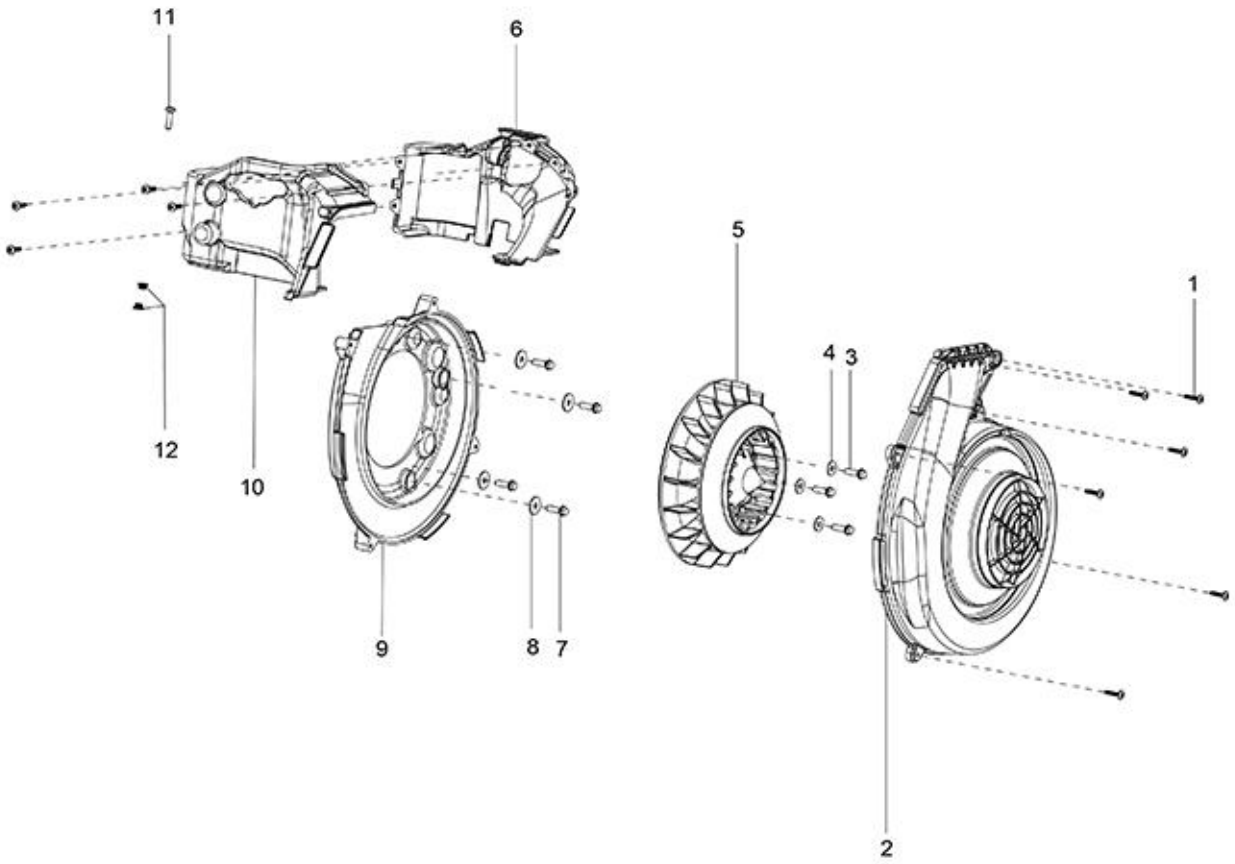
11
6
5
1
4
3
12
10
9
8
7
2

29

Print Date: 07-Apr-2022

PLATE-13

Aircooling Circuit Components

Fig. No.	Part No.	Description	Qty	Remarks
1	1A000024	SELF TAPPING SCREW (3X20)	10	
2	1A010001	FAN COVER	1	
3	1A002691	FLANGED HEX HEAD SCREW M6X20 CL10	3	
4	B019047	WASHER	3	
5	1A000831	ASSY FAN	1	
6	1A006740	SHROUD EXHAUST SIDE	1	
7	018639	SCREW M6X20	4	
8	B016192	WASHER 6.2X20X2	4	
9	1A006742	FAN COVER SUPPORT	1	
10	1A006743	COMPLETE SHROUD INTAKE SIDE	1	
11	B016620	SCREW WITH CYLINDRICAL HEAD M5X21	1	
12	B015312	KNURLED BUSH	2	

30

Print Date: 07-Apr-2022

PLATE-14

Timing Group

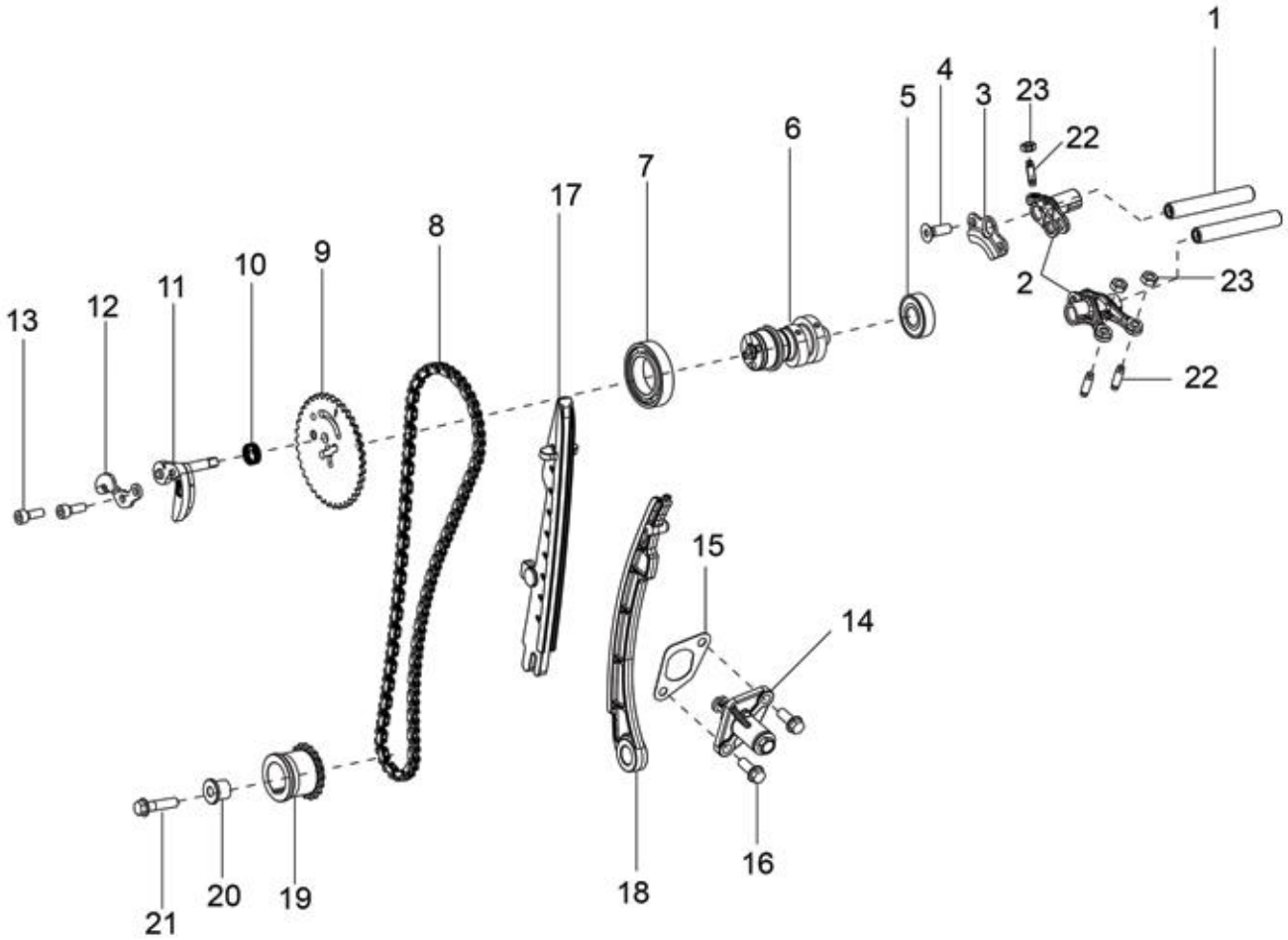
1
4
5
3
23
22
6
7
17
8
9
10
11
12
13
2
23
22
15
14
16
18
19
20
21

31

Print Date: 07-Apr-2022

PLATE-14

Timing Group

Fig. No.	Part No.	Description	Qty	Remarks
1	B017113	ROCKER ARM SHAFT	2	
2	1A013013	ROCKER ARM GROUP	1	
3	B014760	CAMSHAFT CONTAINMENT SHEET-STEEL	1	
4	B018946	COUNTERSUNK SCREW M6X18	1	
5	83040R	DEEP GROOVE BALL BEARING	1	
6	B017746	CAMSHAFT WITH I.P.	1	
7	83041R	DEEP GROOVE BALL BEARING	1	
8	1A015692	TIMING CHAIN SOUNDLESS TYPE	1	
9	1A002358	TIMING CROWN	1	
10	B015483	DECOMPRESSION SPRING	1	
11	SP1A006405	CENTRIFUGAL MASS WITH I.P.	1	
12	1A008397	CENTRIFUGAL MASS CONTAINMENT SHEET	1	
13	B018718	EXAG. SOCKET CYLIND.HEAD SCREW M5X14	2	
14	B017165	CHAIN TENSIONER DEVICE	1	
15	847928	CHAIN SUPPORT GASKET	1	
16	434541	SCREW	2	
17	1A006899	FIXED PAD	1	
18	1A006901	CHAIN TIGHTENING ROD	1	
19	1A007565	TIMING PINION	1	
20	485868	SPACER FOR CHAIN TIGHTNING ROD	1	
21	B016774	FLANGED HEXAGONAL SCREW M6X25	1	
22	B017323	VALVE ADJUSTMENT SCREW	3	
23	B017431	ROCKER ARM NUT	3	

32

Print Date: 07-Apr-2022

PLATE-15

Cylinder- Piston Group

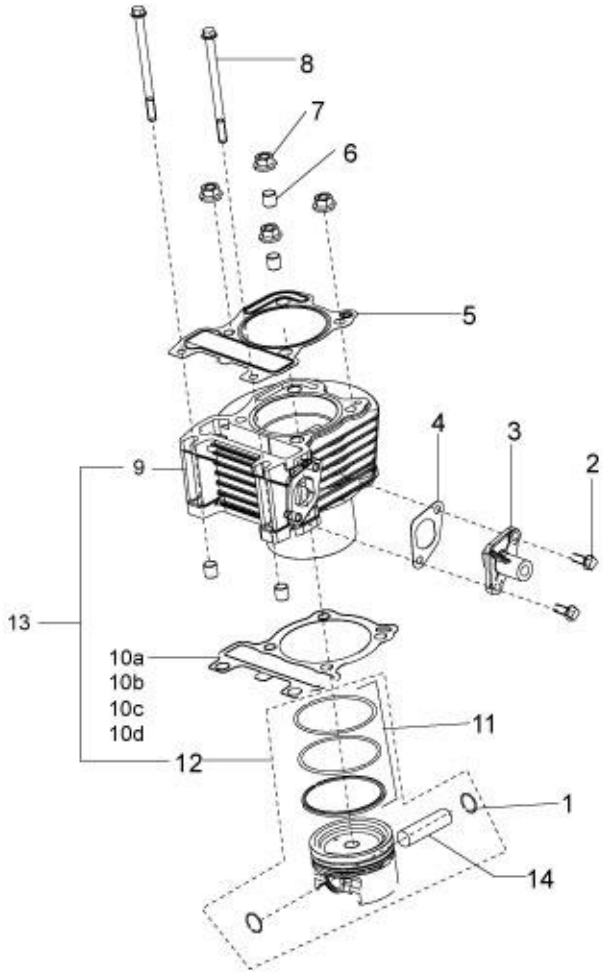
8
7
6
5
4
3
2
9
13
10a
10b
10c
10d
11
12
1
14

33

Print Date: 07-Apr-2022

PLATE-15

Cylinder- Piston Group

Fig. No.	Part No.	Description	Qty	Remarks
1	963486	CIRCLIP FOR PISTON WRIST	2	
2	434541	SCREW	2	
3	B017165	CHAIN TENSIONER DEVICE	1	
4	847928	CHAIN SUPPORT GASKET	1	
5	B014555	HEAD CYLINDER GASKET	1	
6	435571	REFERENCE DOWEL	4	
7	B016939	FLANGED NUT M8X1.25	4	
8	B018854	HEXAGONAL HEAD FLANGED SCREW M6X90	2	
9	KIT1U000025	BLOCK PISTON KIT	1	
10a	CM284001	CRANKCASE/CYLINDER GASKET (0.4)	1	LPG
10a.1	CM284002	CRANKCASE/CYLINDER GASKET (0.6)	1	LPG
10b	CM284003	CRANKCASE/CYLINDER GASKET (0.8)	1	LPG/PTL
10c	CM284004	CRANKCASE/CYLINDER GASKET (1.0)	1	PTL
10d	CM284005	CRANKCASE/CYLINDER GASKET (1.2)	1	PTL
11	1A009621R	PISTON RING GROUP	1	
12	KIT1U000024	PISTON ASSEMBLY	1	NS- Service under BP Kit
13	KIT1U000025	BLOCK PISTON KIT	1	
14	482335	PISTON PIN	1	

34

Print Date: 07-Apr-2022

PLATE-16

Electric Starting Group

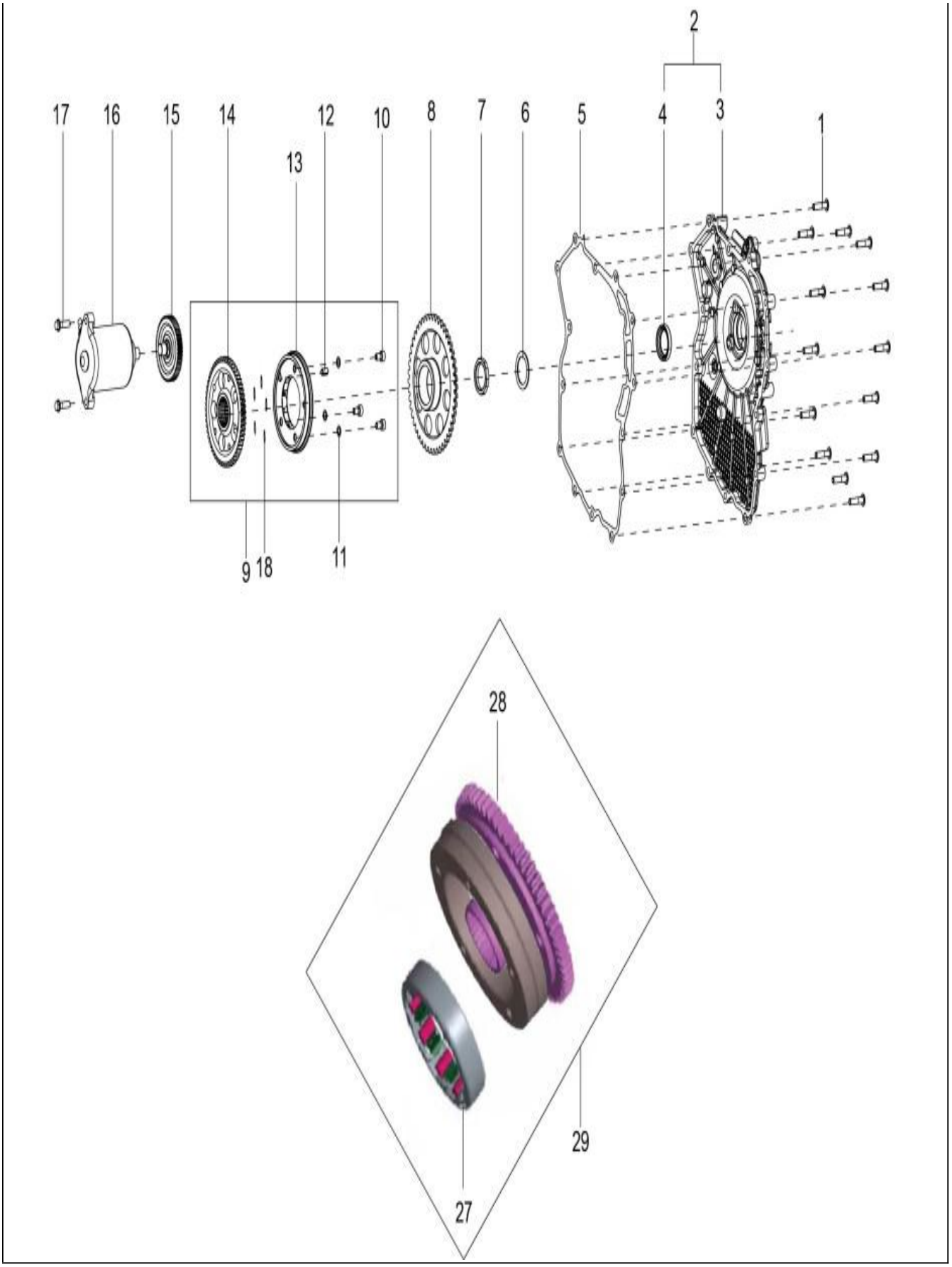
2
17
16
15
14
12
10
8
7
6
5
4
3
1
13
9
18
11
28
29
27

35

Print Date: 07-Apr-2022

PLATE-16

Electric Starting Group

Fig. No.	Part No.	Description	Qty	Remarks
1	B018853	FLANGED HEXAGONAL HEAD SCREW M6X30	14	
2	SP1A007045	STARTER COVER WITH I.P.	1	
3	1A006751	STARTER COVER	1	
4	B016120	SEAL RING 25X35X7	1	
5	1A006858	STARTER COVER GASKET	1	
6	B016148	WASHER	1	
7	1A021204	RING NUT	1	
8	1A018038	CROWN ELECTRIC STARTER WITH I.P.	1	
9	1D001846	COMPLETE STATOR	1	
10	1A000402	SOCKET HEAD SCREW	3	NS-Order on modi.assy.P/N.SP1A018746 INA
11	B019420	CONICAL SPRING KNURLED WASHER	3	NS-Order on modi.assy.P/N.SP1A018746 INA
12	1A000742	ELASTIC PIN	1	NS-Order on modi.assy.P/N.SP1A018746 INA
13	1A010696R	ONE WAY CLUTCH	1	NS-Order on modi.assy.P/N.SP1A018746 INA
14	1A008715	CUM CLUTCH HUB	1	NS-Order on modi.assy.P/N.SP1A018746 INA
15	B017189	ELECTRIC STARTER INTERMED GEAR WITH P.I.	1	
16	1D000425R	STARTER MOTOR	1	
17	B016774	FLANGED HEXAGONAL SCREW M6X25	2	
18	1A002661	PLANE SPRING - CLUTCH ASSY	5	Only for Ducati. Not app. for INA Clutch
18	1A014399	ONE WAY CLUTCH SPRING	1	Texspin one way clutch
19	1A009586	REAR BRACKET ASSY	1	NI
20	1A009587	BRUSH ASSLY KIT (+VE & -VE)	1	NI
21	1A009588	ARMATURE ASSLY	1	NI
22	1A009589	YOKE ASSLY	1	NI
23	1A009590	FRONT BRACKET ASSLY	1	NI
24	1A009591	HEXAG. HEAD SCREW	1	NI
25	1A009592	O-RING KIT	1	NI
26	1A009593	THRUST WASHER KIT	1	NI
27	1A020456	ONE WAY CLUTCH ASSY	1	NEW MODI. INA ONE WAY CLUTCH
28	1A018212	CUM CLUTCH HUB	1	NEW MODI. INA ONE WAY CLUTCH
29	SP41A020456	ONE WAY CLUTCH HUB ASSY - 230CC SPD	5	Consists of 27/28.

36

Print Date: 07-Apr-2022

PLATE-17

Speed Gear Group

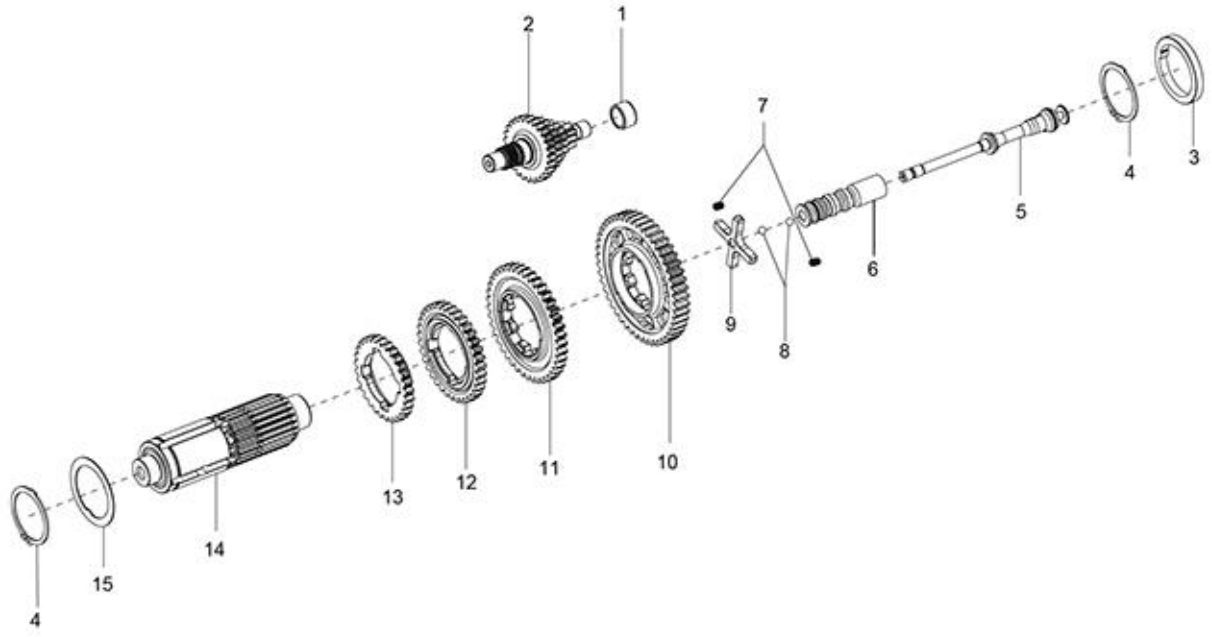
2
1
7
4
3
5
6
9
8
10
11
12
13
14
15
4

37

Print Date: 07-Apr-2022

PLATE-17

Speed Gear Group

Fig. No.	Part No.	Description	Qty	Remarks
1	122032014	INNER RING - CLUSTER GEAR	1	
2	1A011044	CLUSTER GEAR	1	
3	1A007029	LOCK WASHER	1	
4	009101	SEEGER RING	1	
5	1A012181	STEM	1	
6	1A012846	BUSH GEAR SHIFTER	1	
7	1A006970	SPRING	2	
8	002139	BALL	2	
9	1A010166	CROSS	1	
10	1A010160	SPEED GEAR 1ST	1	
11	1A010161	SPEED GEAR 2ND	1	
12	1A010162	SPEED GEAR 3RD	1	
13	1A011289	SPEED GEAR 4TH	1	
14	1A017112	SECONDARY GEAR SHAFT	1	
15	1A006115	LOCK WASHER	1	

38

Print Date: 07-Apr-2022

PLATE-18
Engine Support

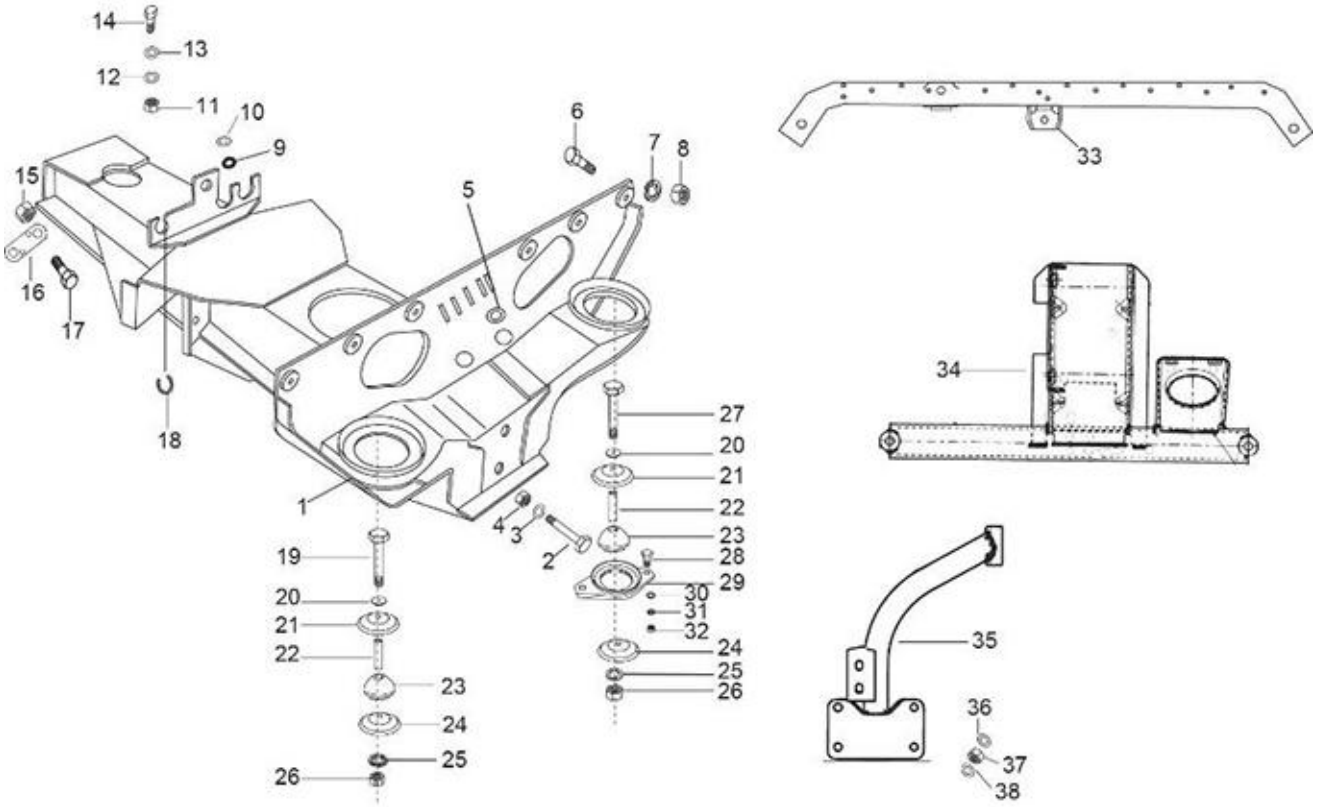
14
13
12
11
10
9
15
16
17
18
6
7
8
5
1
4
3
2
19
20
21
22
23
24
25
26
27
28
29
30
31
32
33
34
35
36
37
38

39

Print Date: 07-Apr-2022

PLATE-18

Engine Support

Fig. No.	Part No.	Description	Qty	Remarks
1	B075798	FRAME ASSY. SUSPENSION & ENGINE SUPPORT	1	
2	568689	HEX HEAD BOLT M10X100	2	
3	286328	PLAIN WASHER 20X10.2X2	2	
4	231370	SELF BREAKING NUT M10	2	
5	15478	GROMMET4	2	
6	31119	HEX HD SCREW M8 X 25	6	
7	016408	SPRING WASHER	6	
8	20108	HEX NUT M8	6	
9	178610	GROMMET	1	
10	016406	SPRING WASHER	2	
11	20108	HEX NUT M8	2	
12	016408	SPRING WASHER	2	
13	2383	PLAIN WASHER M20X8.5X2	2	
14	31119	HEX HD SCREW M8 X 25	2	
15	231370	SELF BREAKING NUT M10	2	
16	632299	PLATE	2	
16	632299	PLATE	1	
17	632247	HEX HDD SCREW M10X30 CC8.8	2	
18	568140	GROMMET	1	
19	604948	HEX.HDD BOLT M8 X 110 WITH POINTING	2	
20	2383	PLAIN WASHER M20X8.5X2	3	
21	569375	PLATE	3	
22	267065	SPACER FRONT	2	
23	265091	DUMPER ENGINE MTG.	2	
24	569244	PLATE	3	
25	016408	SPRING WASHER	3	
26	15335	HEX HD NUT M8	2	
27	272178	HEX. HDD BOLT M8 X 122 CL 10.9	1	
28	31154	HEX HDD SCREW M10X22 CL 8.8	2	
29	B003286	REAR AVM SUPPORT BKT. ASSY.	1	
30	286328	PLAIN WASHER 20X10.2X2	2	
31	16410	SPRING WASHER	2	
32	20108	HEX NUT M8	4	
33	B075595	CROSS MEMBER ENGINE MTG REAR	1	
34	B075459	FRT CROSS MEMBER ASSY. ENG. MTG.	1	

40

Print Date: 07-Apr-2022

PLATE-18
Engine Support

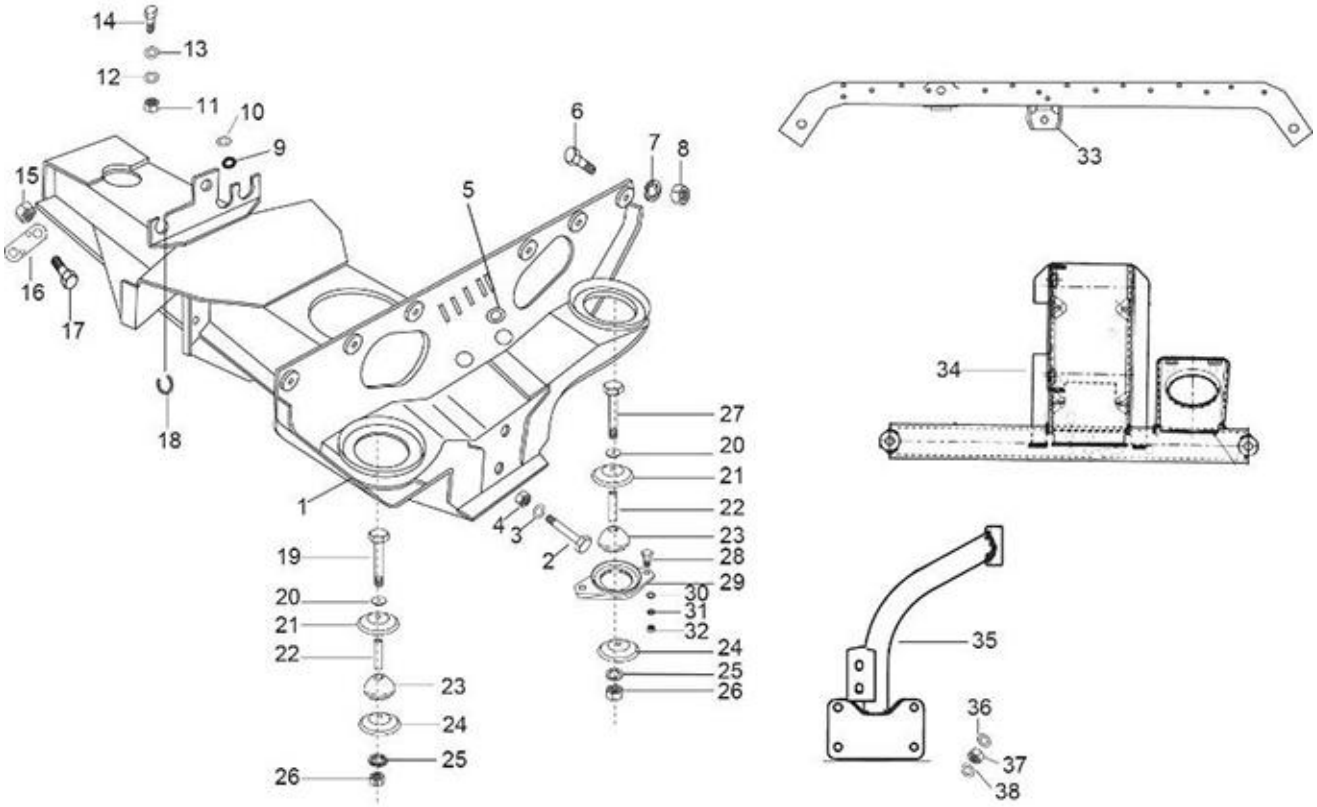
14
13
12
11
10
9
15
16
17
18
6
7
8
5
1
4
3
2
19
20
21
22
23
24
25
26
27
28
29
30
31
32
33
34
35
36
37
38

41

Print Date: 07-Apr-2022

PLATE-18
Engine Support

Fig. No.	Part No.	Description	Qty	Remarks
35	B075593	BKT SUB ASSLY ENGINE SUPPORT REAR	1	
36	286328	PLAIN WASHER 20X10.2X2	2	
37	20110	HEX NUT M10	4	
38	16410	SPRING WASHER	2	
39	B076295	PROTECTION BELLOW- GEAR CABLE	1	NI

42

Print Date: 07-Apr-2022

PLATE-19

FUEL TANK/FILTER/FUEL PIPES-PTL

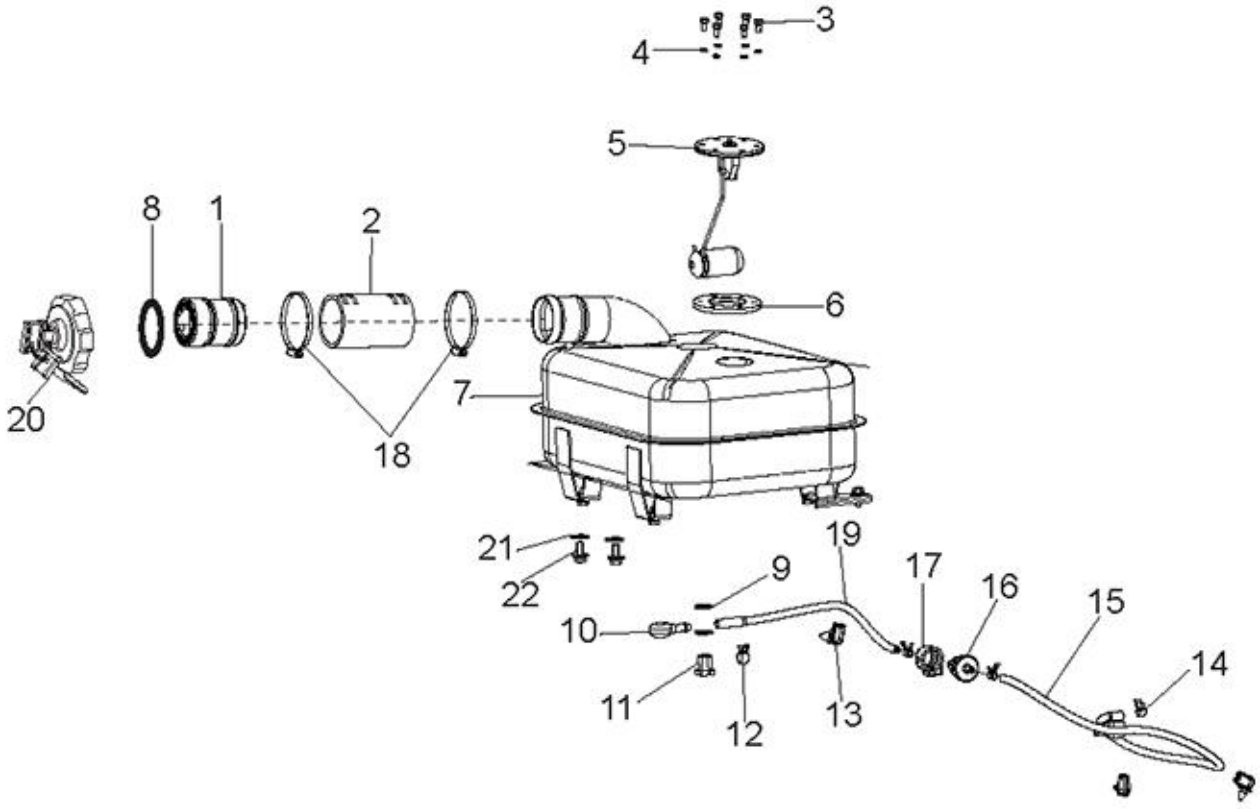
3
4
5
8
1
2
6
20
7
18
21
22
19
9
17
16
15
10
14
11
12
13

43

Print Date: 07-Apr-2022

PLATE-19

FUEL TANK/FILTER/FUEL PIPES-PTL

Fig. No.	Part No.	Description	Qty	Remarks
1	B003115	TUBE FUEL TANK FILLER ASSY	1	
2	NS	NOT SERVICEABLE	1	NS
3	31056	HEX HEAD SCREW M5 X 12 CL. 8.8	5	
4	16405	SPRING WASHER M5	5	
5	567878R	TANK UNIT	1	
6	925888	RUBBER GASKET FOR TANK UNIT	1	
7	B076903	FUEL TANK ASSLY WITH T.UNIT CITY DSL/PTL	1	
8	644299	COLLAR	1	
9	013880	PLAIN WASHER	2	
10	604908	BANJO	1	
11	604909	BANJO BOLT (M14X1.5)	1	
12	B003282	HOSE CLIP (DIA.7) (PETROL & CNG/LPG)	2	
13	216369	CLAMP	3	
14	B003282	HOSE CLIP (DIA.7) (PETROL & CNG/LPG)	3	
15	B076406	FUEL PIPE - FUEL FILTER TO CARBURATOR-PTL	1	
16	B074593	COMPACT FUEL STRAINER (3 L/H)	1	
17	B075790	FUEL FILTER SUPPORT	1	
18	B041853	HOSE CLIP (SIZE : 65A)	2	
19	B075336	FUEL PIPE -TANK TO FILTER-PTL	1	
20	B024168	P.T.CAP ASSLY WITH KEY	1	
21	16405	SPRING WASHER M5	6	
22	31056	HEX HEAD SCREW M5 X 12 CL. 8.8	6	

44

Print Date: 07-Apr-2022

PLATE-20

FUEL TANK/FILTER/FUEL PIPES - GAS

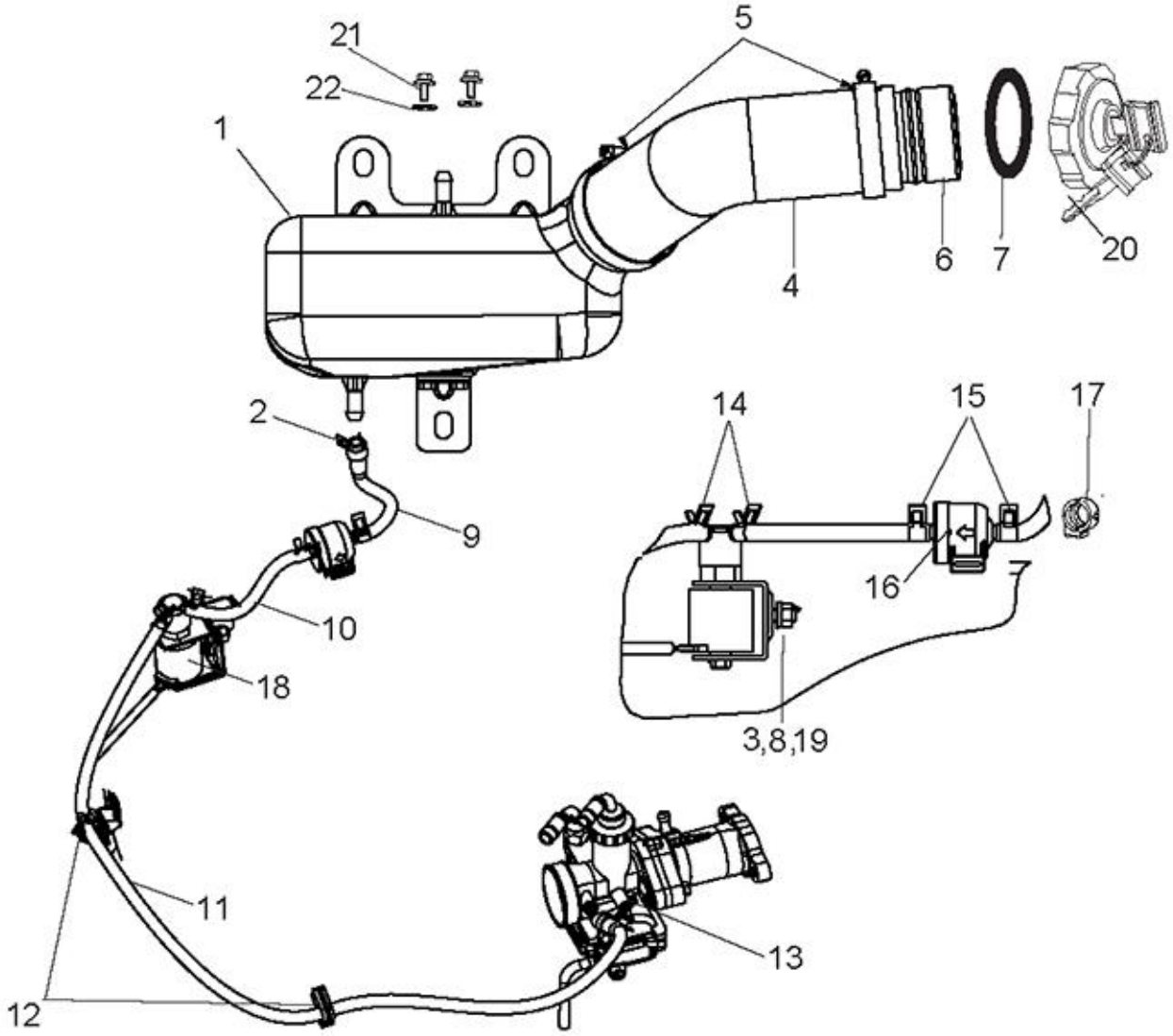
21
22
5
1
4
6
7
20
2
9
14
15
17
16
10
18
3,8,19
11
13
12

45

Print Date: 07-Apr-2022

PLATE-20

FUEL TANK/FILTER/FUEL PIPES - GAS

Fig. No.	Part No.	Description	Qty	Remarks
1	B042390	FUEL TANK ASSY. PLASTIC (LPG/CNG)	1	
2	B075707	SPRING BAND HOSE CLAMP (DIA 10	2	
3	3056	PLAIN WASHER M6 OD12	2	
4	B042378	NECK HOSEHOSE FUEL TANK	2	
5	B041853	HOSE CLIP (SIZE : 65A)	2	
6	B003115	TUBE FUEL TANK FILLER ASSY	1	
7	644299	COLLAR	1	
8	016406	SPRING WASHER	2	
9	B075337	FUEL PIPE-TANK TO SMALL FILTER-CITY PTL	1	
10	B074962	FUEL PIPE- SMALL FILTER TO SOLENOID	1	
11	B075796	FUEL PIPE - FUEL FILTER TO CARBURATOR-CNG/LPG	1	
11	B076406	FUEL PIPE - FUEL FILTER TO CARBURATOR-PTL	1	FOR LAM HS
12	216369	CLAMP	1	
13	B041852	SPRING BAND HOSE CLIP (DIA. 9.4)	2	
14	B041798	SPRING BAND HOSE CLAMP DIA 8.6	2	
15	B003282	HOSE CLIP (DIA.7) (PETROL & CNG/LPG)	2	
16	B074593	COMPACT FUEL STRAINER (3 L/H)	1	
17	B075790	FUEL FILTER SUPPORT	1	
18	B076732	PETROL SOLENOID BSIV	1	
19	20106	HEX NUT M6	2	
20	940125	P.T. CAP ASSLY WITH KEY	1	
21	661925	PHILIP PAN HEAD SCREW (M5 X 0.8 X 1.6)	4	
22	003054	PLAIN WASHER	4	

46

Print Date: 07-Apr-2022

PLATE-21

Wind Shield/Glass/Beading

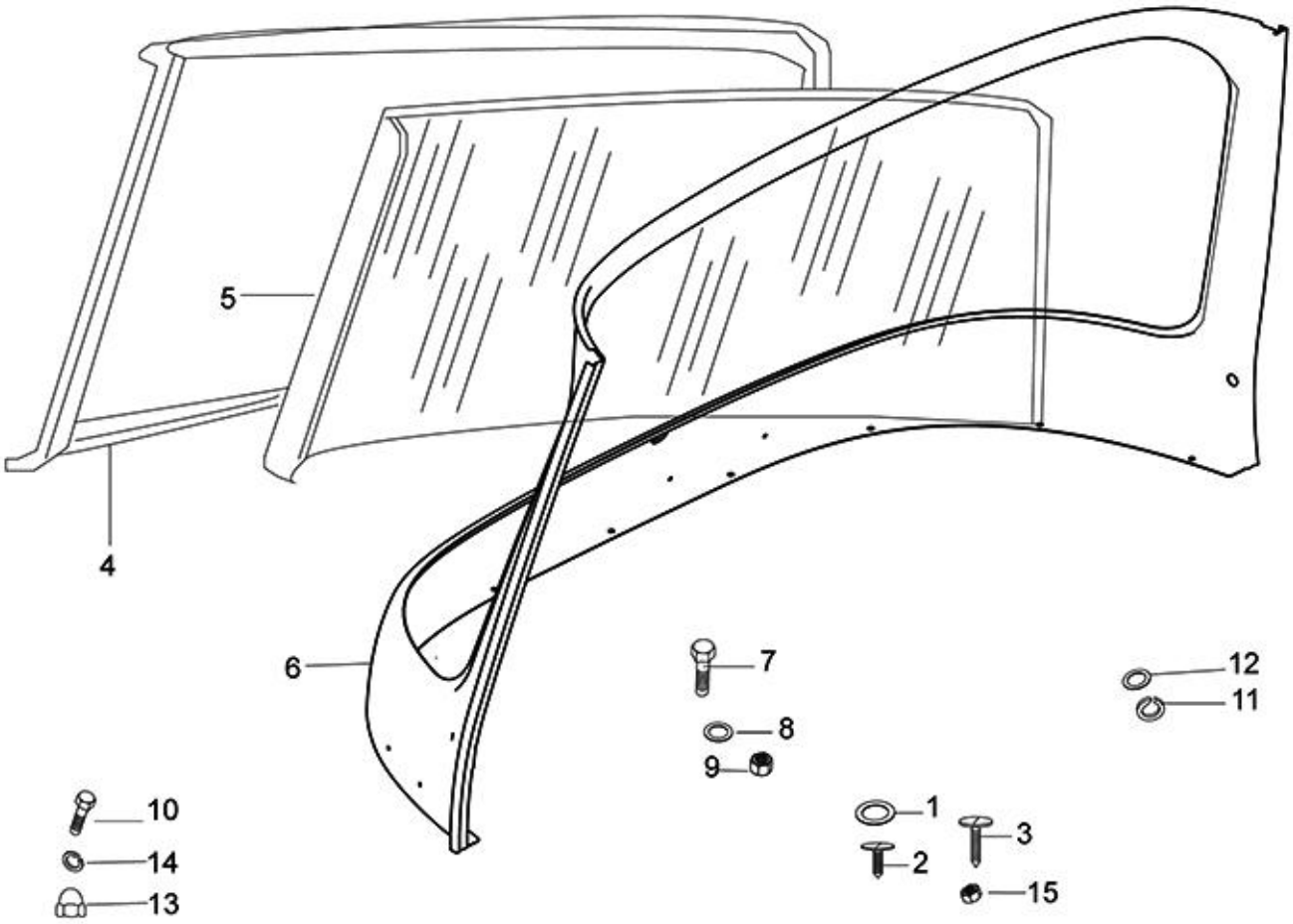
5
4
6
7
8
9
12
11
10
14
13
1
2
3
15

47

Print Date: 07-Apr-2022

PLATE-21

Wind Shield/Glass/Beading

Fig. No.	Part No.	Description	Qty	Remarks
1	16670	PLAIN WASHER 12X4.5X1	2	
2	568692	PAN SELF TAP SCREW 6SG X 16AB	2	
3	18630	PAN SELF TAP SCREW 6SG X 25AB	2	
4	B073626	WINDSHIELD PACKING	1	
5	B073601	LAMINATED WINSHIELD GLASS	1	E - Marked (Export)
6	B073602ED	WINDSCREEN FRAME (COMPLETE)	1	
7	B001386	HEX HEAD SCREW M5X20	9	
8	16405	SPRING WASHER M5	16	
9	20105	PLAIN NUT M5	20	
10	30242	SLOT CH. HD. SCREW	8	
11	808000826	PLAIN WASHER M8	2	
12	016408	SPRING WASHER	2	
13	568713	DOME NUT	8	
14	3055	PLAIN WASHER M5	8	
15	20104	HEX NUT M4	8	

48

Print Date: 07-Apr-2022

PLATE-22

Main Frame/Battery Bkt/Jack Bkt

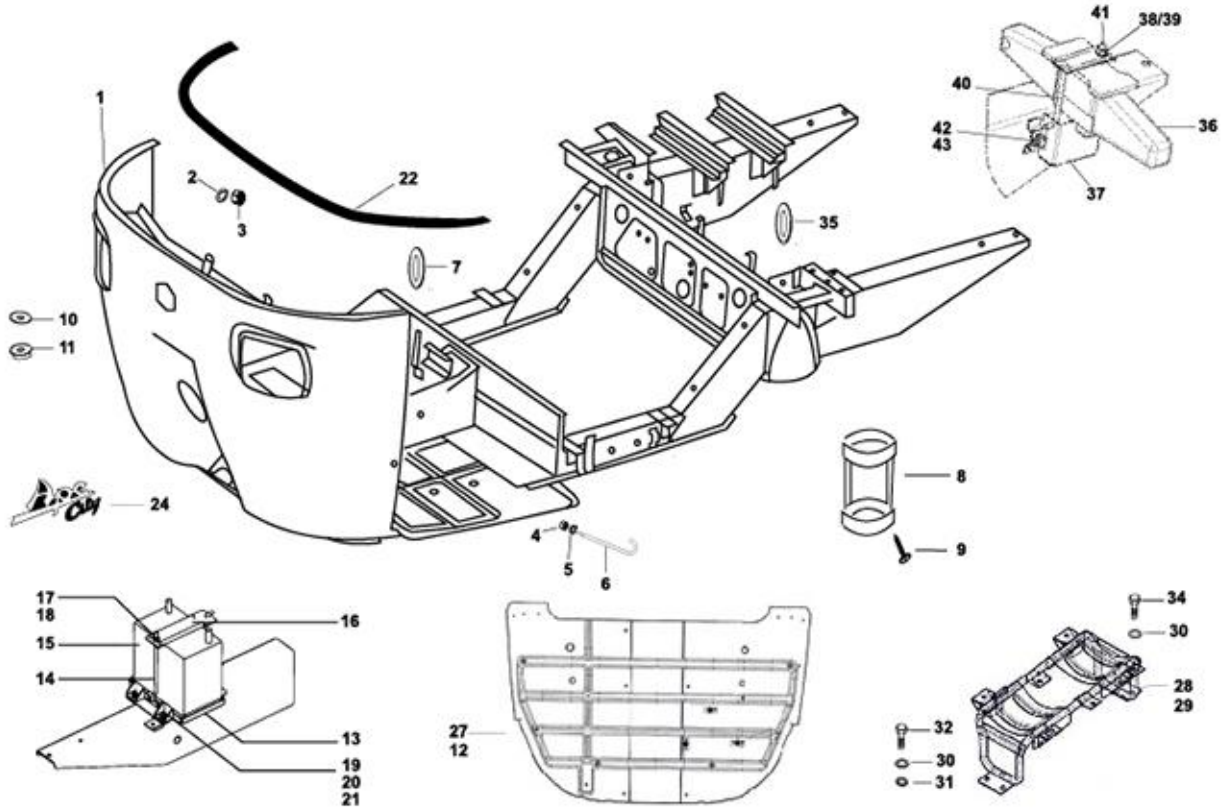
41
38/39
40
42
43
36
37
1
2
3
22
35
7
10
11
8
24
4
5
6
9
17
18
16
15
14
13
19
20
21
27
12
34
30
28
29
32
30
31

49

Print Date: 07-Apr-2022

PLATE-22

Main Frame/Battery Bkt/Jack Bkt

Fig. No.	Part No.	Description	Qty	Remarks
1	6B001698BW	MAIN FRAME ASSLY WITH IP-BSIV EXP_BW	1	PTL
1	6B001698CB	MAIN FRAME ASSLY WITH IP-BSIV EXP_CB	1	PTL
1	6B001748	MAIN FRAME ASSLY - BS4 LPG EX (W/O HSRP)	1	LPG
2	003054	PLAIN WASHER	5	
3	20104	HEX NUT M4	5	
4	20108	HEX NUT M8	1	
5	3058	PLAIN WASHER 15X8.4X1.5	1	
6	604954	TENSION ROD	1	
7	6D000099	GROMMET	1	
8	B041392	BOTTLE CARRIER STAND	1	
9	660168	PAN SELF TP. SCREW 10 SGX13AB	2	
10	B075979	GROMMET	2	
11	604756	HOSE CLIP	2	
12	B074150	CABIN FLOOR SUB-ASSY. (PET/ DLS)	1	Applicable FOR 20.6Lt. TANK
12	B076334	CABIN FLOOR SUB-ASSY. (LPG / CNG)	1	Applicable FOR 18LT TANK
13	616649	BATTERY TRAY	1	
14	632508	TENSION ROD ASSY. (BATTERY MOUNTING.)	1	
15	B006544	BATTERY 12V-35AH	1	
16	B003978	BATTERY HOLDING PLATE	1	
17	20108	HEX NUT M8	1	
18	3058	PLAIN WASHER 15X8.4X1.5	1	
19	016408	SPRING WASHER	1	
20	13861	PLAIN WASHER 20X8.2X2.5	4	
21	31118	SCREW M8X20	4	
22	B024474	BEADDING LINING	1	
23	604972	PIVOT GASKET-APE LOGO PLATE	1	Not applicable
24	B078919	APE CITY STICKER (FRONT PANEL)	1	
25	B074657	BEEDING DOME SIDE PILLAR (LPG/CNG)	1	
26	B074637	BEEDING DOME SIDE PILLAR (PET/DLS)	1	
27	B076334	CABIN FLOOR SUB-ASSY. (LPG / CNG)	1	
28	B078342	CYL. MTG. BKT 40LTR	2	Applicable FOR 20.6Lt. TANK
28	6B000850	CYLINDER SUPPORT BRACKET ASSLY	2	Applicable FOR 20.6Lt. TANK
28	B075616	PIPE STRUCTURED CYLINDER MTG ASSLY-LPG	1	Applicable FOR 18LT TANK
30	2383	PLAIN WASHER M20X8.5X2	4	
31	016408	SPRING WASHER	6	

50

Print Date: 07-Apr-2022

PLATE-22

Main Frame/Battery Bkt/Jack Bkt

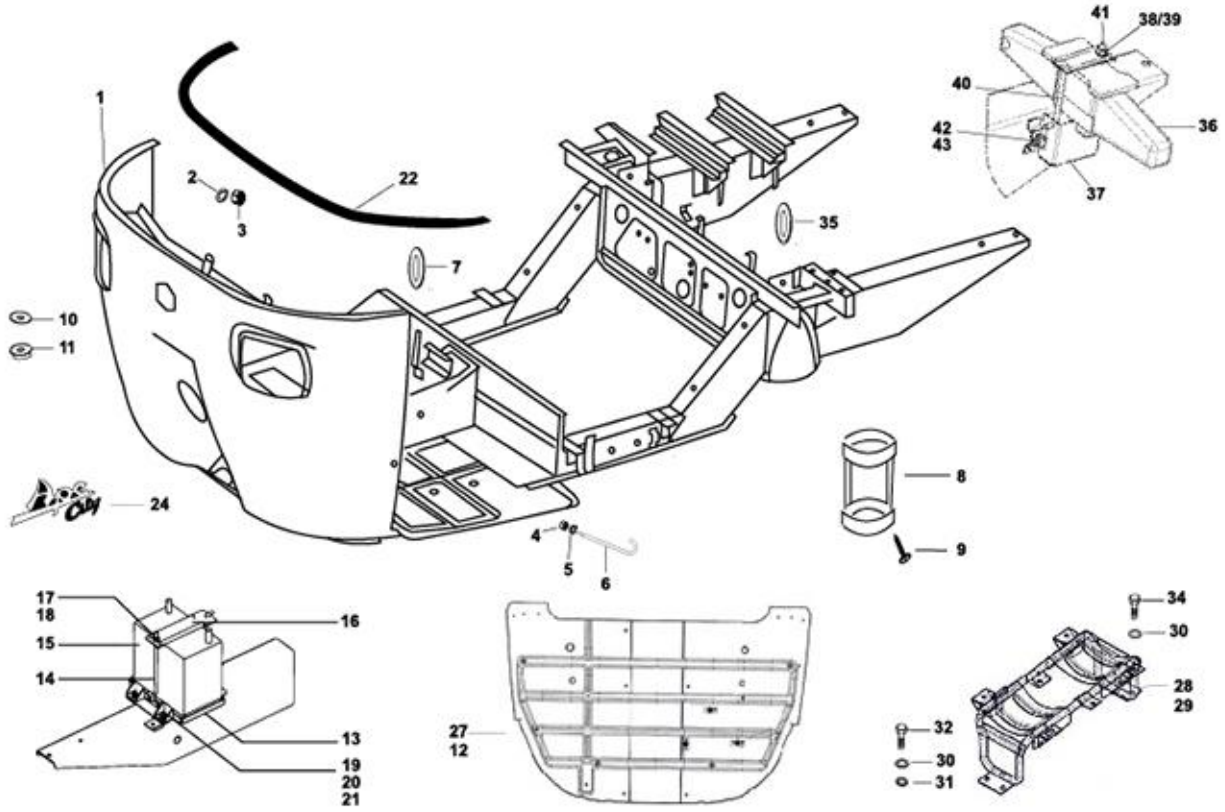
41
38/39
40
42
43
36
37
1
2
3
22
35
7
10
11
8
24
4
5
6
9
17
18
16
15
14
13
19
20
21
27
12
34
30
28
29
32
30
31

51

Print Date: 07-Apr-2022

PLATE-22

Main Frame/Battery Bkt/Jack Bkt

Fig. No.	Part No.	Description	Qty	Remarks
32	31118	SCREW M8X20	4	
33	3058	PLAIN WASHER 15X8.4X1.5	3	
34	31116	HEX HD. SCREW M8X16	2	
35	B075989	GROMMET FRT PART OF CENTRAL BEAM	1	
36	B076650R	JACK ASSLY	1	
37	B076012	JACK BOX	1	
38	13861	PLAIN WASHER 20X8.2X2.5	1	
39	20108	HEX NUT M8	1	
40	604953	TENSION ROD	1	
41	604954	TENSION ROD	1	
42	652562	HEX. SCREW M8 X 1.25 X 14 WITH SPRING WA	2	
43	2383	PLAIN WASHER M20X8.5X2	2	

52

Print Date: 07-Apr-2022

PLATE-23

Inner Parts Of Cabin

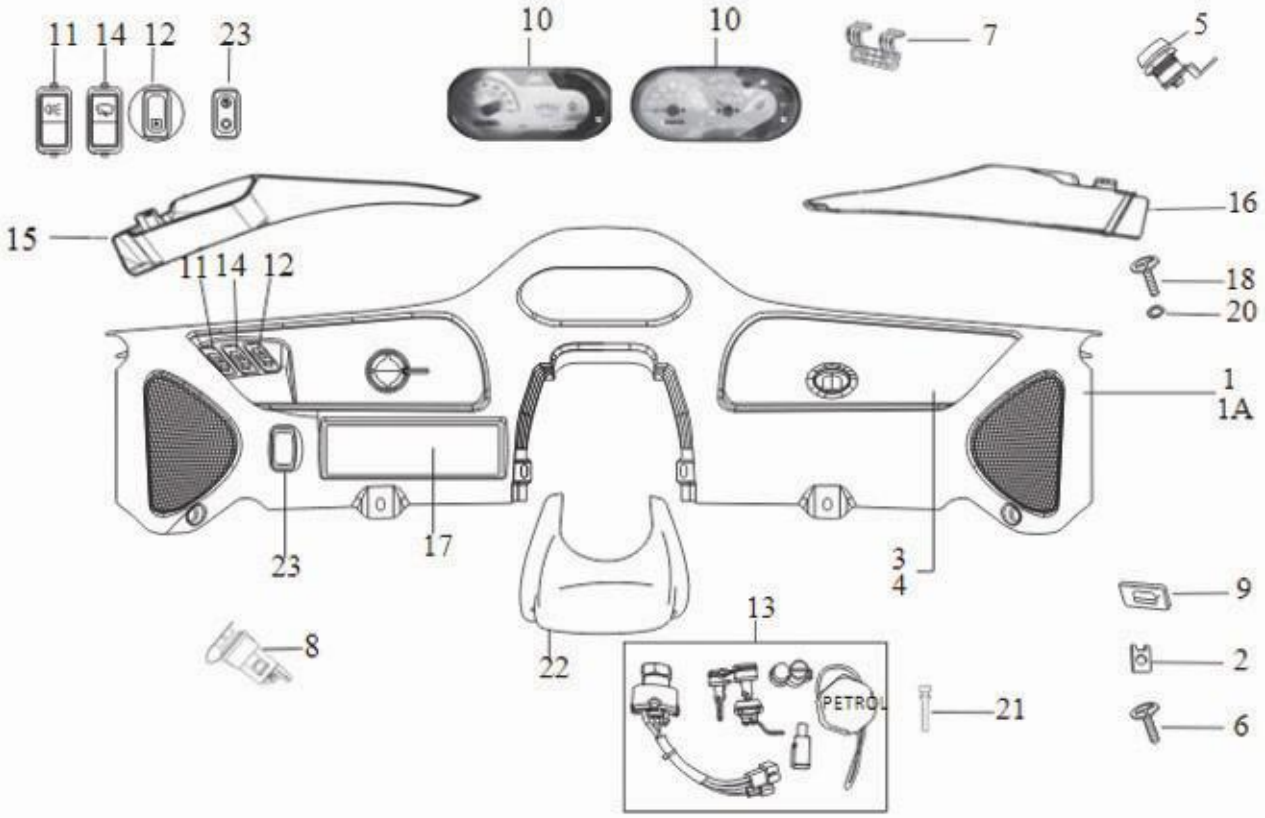
11
14
12
23
10
10
7
5
15
16
11
14
12
18
20
1
1A
23
17
3
4
9
13
8
22
2
PETROL
21
6

53

Print Date: 07-Apr-2022

PLATE-23

Inner Parts Of Cabin

Fig. No.	Part No.	Description	Qty	Remarks
1	B078153	DASHBOARD ASSLY COMPLETE(PET)	1	
1	B078152	DASHBOARD ASSLY (APE CITY) LPG DLX	1	
1A	B073809	DASH BOARD ASSY.	1	
2	8080	SPRING PLATE	4	
3	B073810	GLOVE BOX COVER	1	
4	568671	GASKET - GLOW BOX COVER (N.I.)	4	
5	B024169	GLOVE BOX LOCK WITH KEY	1	
6	660168	PAN SELF TP. SCREW 10 SGX13AB	4	
7	B073814	HINGE	1	
8	B074905	MOBILE CHARGER	1	
9	643691	BOLT LOCK PLATE	1	
10	B078033	INST.CLUST- CITY - (PETROL) SW/NEUTRAL	1	
10	B078078	INST.CLUST- CITY - (LPG) SW/NEUTRAL	1	
11	B073478R	SWITCH 3 POSITION	1	
12	B073481R	HAZARD WARNING SWITCH WITH CROWN CAP (12V)(VE)	1	
13	B078845	LOCK SET WITH KEYS (CITY-BSIV PTL)_EXP	1	
13	B076073	LOCK SET WITH KEYS (CITY-BSIV CNG/LPG)	1	
14	B073479R	WIPER MOTOR SWITCH/ SWITCH WIPER MOTOR	1	
15	B073815	UPPER COVER DASH BOARD - LH	1	
16	B073816	UPPER COVER DASH BOARD - RH	1	
17	B073812	UTILITY BOX	1	
18	B023976	CSK PHILIPS HEAD SCREW M5X15	8	
19	B074262	PIN	2	
20	6078	PLAIN WASHER 12 X 5.2 X 1	8	
21	B074275	RUBBER DAMPER	2	
22	B073811	STEERING COLUMN COVER	1	
23	B075732	FUEL CHANGE OVER SWITCH	1	

54

Print Date: 07-Apr-2022

PLATE-24
REAR SUSPENSION

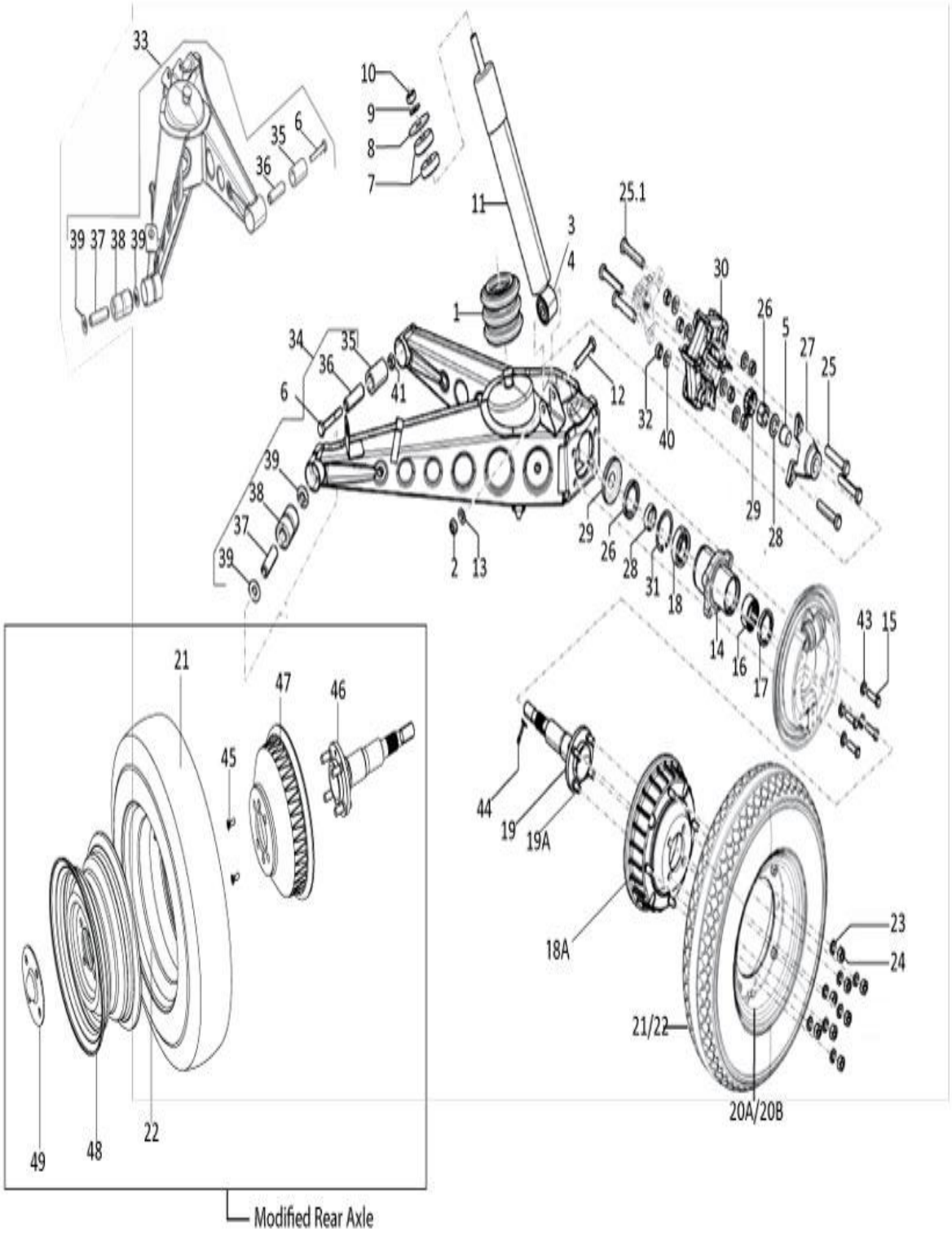
33
10
9
8
7
35
6
36
39 37 38 39
11
3
4
25.1
30
1
26
5
27
25
34
35
36
41
6
12
32
40
39
38
37
39
29
28
2 13
29
26
28
31
18
14
16
17
43 15
21
47
46
45
44
19
19A
18A
23
24
21/22
20A/20B
49
48
22
Modified Rear Axle

55

Print Date: 07-Apr-2022

PLATE-24
REAR SUSPENSION

Fig. No.	Part No.	Description	Qty	Remarks
1	B076290	RUBBER BUMPER	2	
2	231370	SELF BREAKING NUT M10	2	
3	157103	BUSH - SHOCK ABSORBER	2	
4	107827	SPACER	1	
5	128633	CONE	1	
6	643741	HEX HDD BOLT M10 X 80 CL 12.9	4	
7	157103	BUSH - SHOCK ABSORBER	4	
8	6066	PL WASHER 10.5X38X9	2	
9	16410	SPRING WASHER	2	
10	20110	HEX NUT M10	2	
11	B076292	SHOCK ABSORBER REAR - BSIV	2	
12	267068	HEX HEAD BOLT M10 X 60 CC 10.9	2	
13	286328	PLAIN WASHER 20X10.2X2	2	
14	6C000530	REAR WHEEL HUB	2	
15	B002486	BOLT M8 X 35 6G CL 12.9	8	
16	661282	NEEDLE ROLLER BEARING	2	
17	20359	SEAL RING	2	
18	243303R	DEEP GROVE BALL BRG-RR WH AXLE	2	
18A	B042438	BRAKE DRUM ASSY. COMPLETE	2	
19	B024374	REAR AXLE COMPLETE (APE CITY)	2	
19A	B001319	BOLT FOR AXLE	4	
20A	B074588R	WHEEL RIM ASSLY INNER - PAINTED	1	
20B	B074590R	WHEEL RIM OUTTER - PAINTED	1	
21	B001317	TYRE & TUBE ASSEMBLY	4	
21	B042879	TRIPLE PLUS TYRE AND TUBE ASSLY (E-MARK)	3	Egypt
22	B001315	TYRE (4.0 X 8,4 PR)	3	E-Marked Export
22	B042878	TRIPLE PLUS TYRE- 4X8 4PR (E-MARK)	3	Egypt
23	16410	SPRING WASHER	12	
24	20110	HEX NUT M10	12	
25	15594	HEX HDD BOLT M10 X 35	6	
25.1	B024373	ALLEN BOLT M10X65 CL 10.9	2	
26	21118	HEX NUT M18 X 1.5P	2	
27	587617	ELASTIC JOINT CONNECTION HUB (WHL - SIDE)	2	
28	661267	RING	2	
29	109892	PROTECTION CUP RR HUB	2	

56

Print Date: 07-Apr-2022

PLATE-24
REAR SUSPENSION

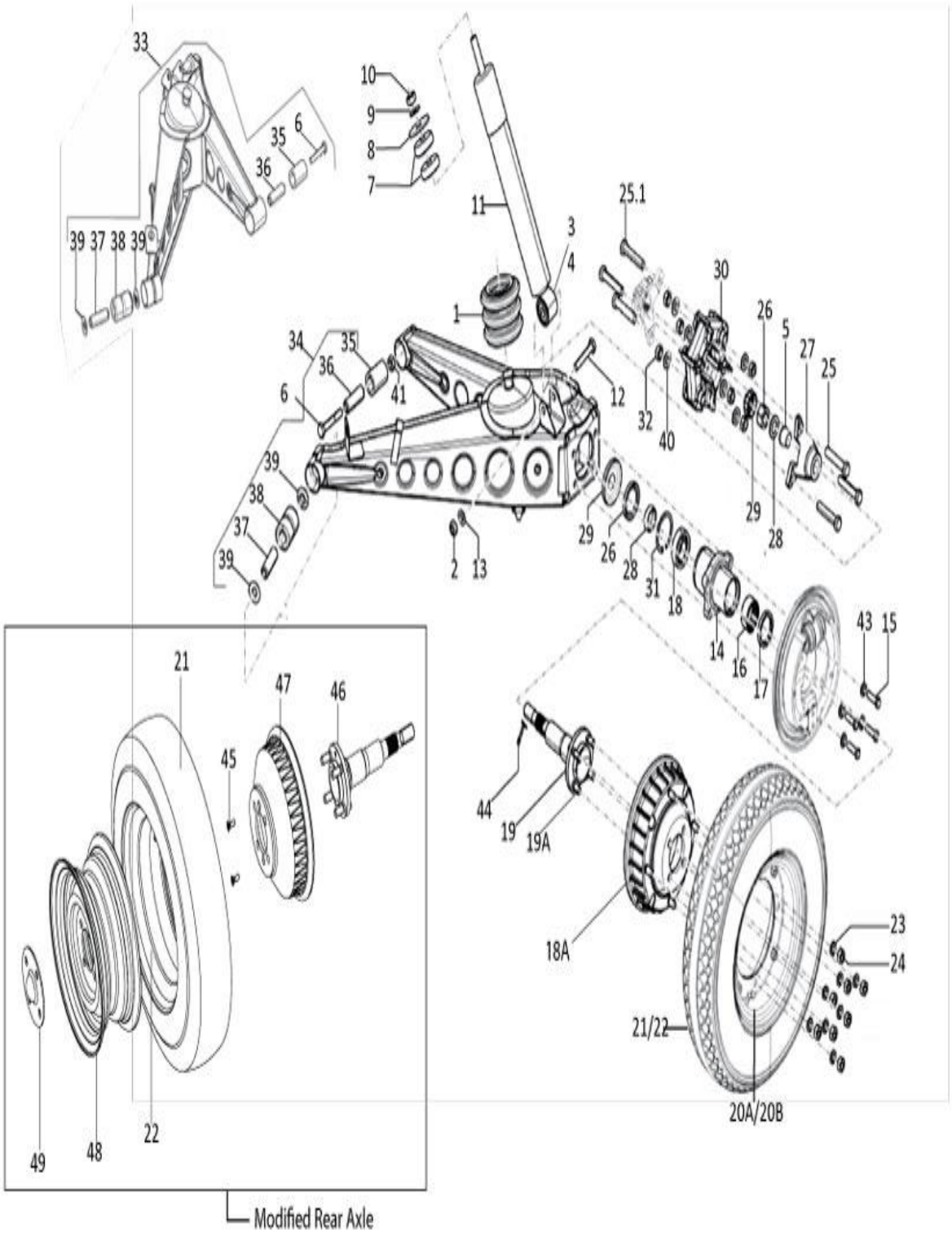
33
10
9
8
7
35
6
36
39 37 38 39
11
3
4
25.1
30
1
26
5
27
25
34
35
36
41
6
12
32
40
39
38
37
39
29
28
29
26
28
31
18
2
13
43
15
14
16
17
21
47
46
45
44
19
19A
18A
23
24
21/22
20A/20B
49
48
22
Modified Rear Axle

57

Print Date: 07-Apr-2022

PLATE-24
REAR SUSPENSION

Fig. No.	Part No.	Description	Qty	Remarks
30	604535	FLEXIBLE COUPLING	2	
31	6650	CIRCLIP DIA 50 (INT)	12	
32	231370	SELF BREAKING NUT M10	1	
33	B075807	ARM SUB ASSY. LH - REAR SUSPENSION	1	
34	B075808	ARM SUB ASSY. RH - REAR SUSPENSION	2	
35	226662	RING FOR ELASTIC SUPPORT	2	
36	226661	INTERNAL BUSH	2	
37	267065	SPACER FRONT	2	
38	226596	BUSH FRONT RING FOR ELASTIC SUPPORT	4	
39	661266	SHOULDER WASHER	14	
40	237246	SHIM WASHER 20X10.2X1	4	
41	231370	SELF BREAKING NUT M10	1	
42	3068	PLAIN WASHER	8	
43	016408	SPRING WASHER	2	
44	12790	SPLIT PIN	4	
45	812061656	CSK PHILIPS HEAD SCREW M6 X 16	2	Modified
46	B077458	REAR AXLE COMPLETE	2	Modified
47	B077245	BRAKE DRUM (CAST IRON)	2	Modified
48	6C000430	WHEEL RIM ASSY	2	Modified
49	B077481	WHEEL CAP	2	Modified

58

Print Date: 07-Apr-2022

PLATE-25

STEERING COLUMN AND FRONT SUSPENSION

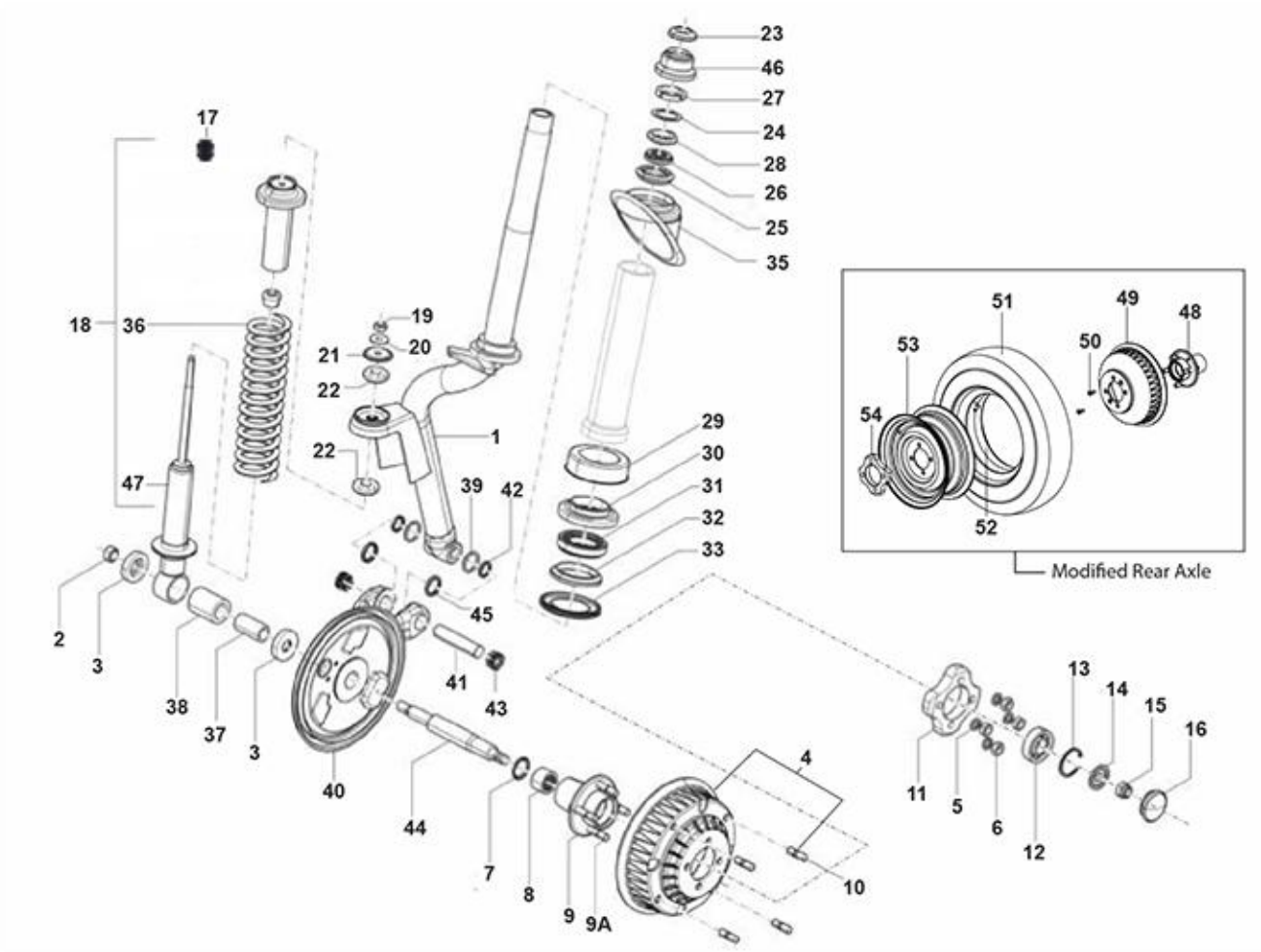
23
46
27
24
28
26
25
35
17
18
36
19
21
20
22
22
1
29
30
31
32
33
47
39
42
45
2
3
38
37
3
41
43
40
44
7
8
9
9A
4
10
11
5
6
12
13
14
15
16
51
49
48
53
50
54
52
Modified Rear Axle

59

Print Date: 07-Apr-2022

PLATE-25

STEERING COLUMN AND FRONT SUSPENSION

Fig. No.	Part No.	Description	Qty	Remarks
1	B073667SP	STEERING COLUMN ASSLY (NRB)-PAX UPGR SPD	1	
1	B075694	STEERING COLUMN WITH IP	1	
2	6C000609	NYLOCK NUT (M10 X 1.25)	1	Required For CKD vehicle
2	568095	NYLOCK NUT	1	
3	87067	PLAIN WASHER 30.5X14.3X2	1	
4	B042438	BRAKE DRUM ASSY. COMPLETE	1	
5	16410	SPRING WASHER	4	
6	20110	HEX NUT M10	4	
7	136434	OIL SEAL	1	
8	125289	NEEDLE BEARING, CRANKASE, FRONT WHEEL	1	
9	B077465	FRONT HUB S/A	1	
9A	B001301	BOLT FRONT HUB.	4	
10	B001323	STUD M10 - BRAKE DRUM	4	
11	B041181	SPACER DISC FRONT WHEEL MTG (ALUMIN)	1	
12	30209R	BALL BEARING FRONT WHEEL HUB	1	
13	567473	CIRCLIP DIA. 42 INT. (841004203)	1	
14	180431	COIN WASHER	1	
15	74521	NUT M14 X 1.5	1	
16	107871	CAP	1	
17	75708	SILENT BLOCK	1	
18	B073690	FRONT SHOCK ABSORBER	1	
19	20110	HEX NUT M10	1	
20	16410	SPRING WASHER	10	
21	6066	PL WASHER 10.5X38X9	1	
23	604758	PROTECTION	1	
24	108873	STOP WASHER FOR HOLDING	1	
25	567990	BEARING RACE UPPER BOTTOM	1	
26	567991	BEARING RACE UPPER TOP	1	
27	108874	SECURING RING NUT	1	
28	6C000190	UPPER BALL CAGE (VE)	1	
29	109064	DUST COVER	1	
30	567992	BEARING RACE LOWER TOP	1	
31	6C000191	LOWER BALL CAGE (VE)	1	
32	567993	BEARING RACE LOWER BOTTOM	1	
33	109066	WASHER WITH PROTECTION FOR BEARING	1	

60

Print Date: 07-Apr-2022

PLATE-25

STEERING COLUMN AND FRONT SUSPENSION

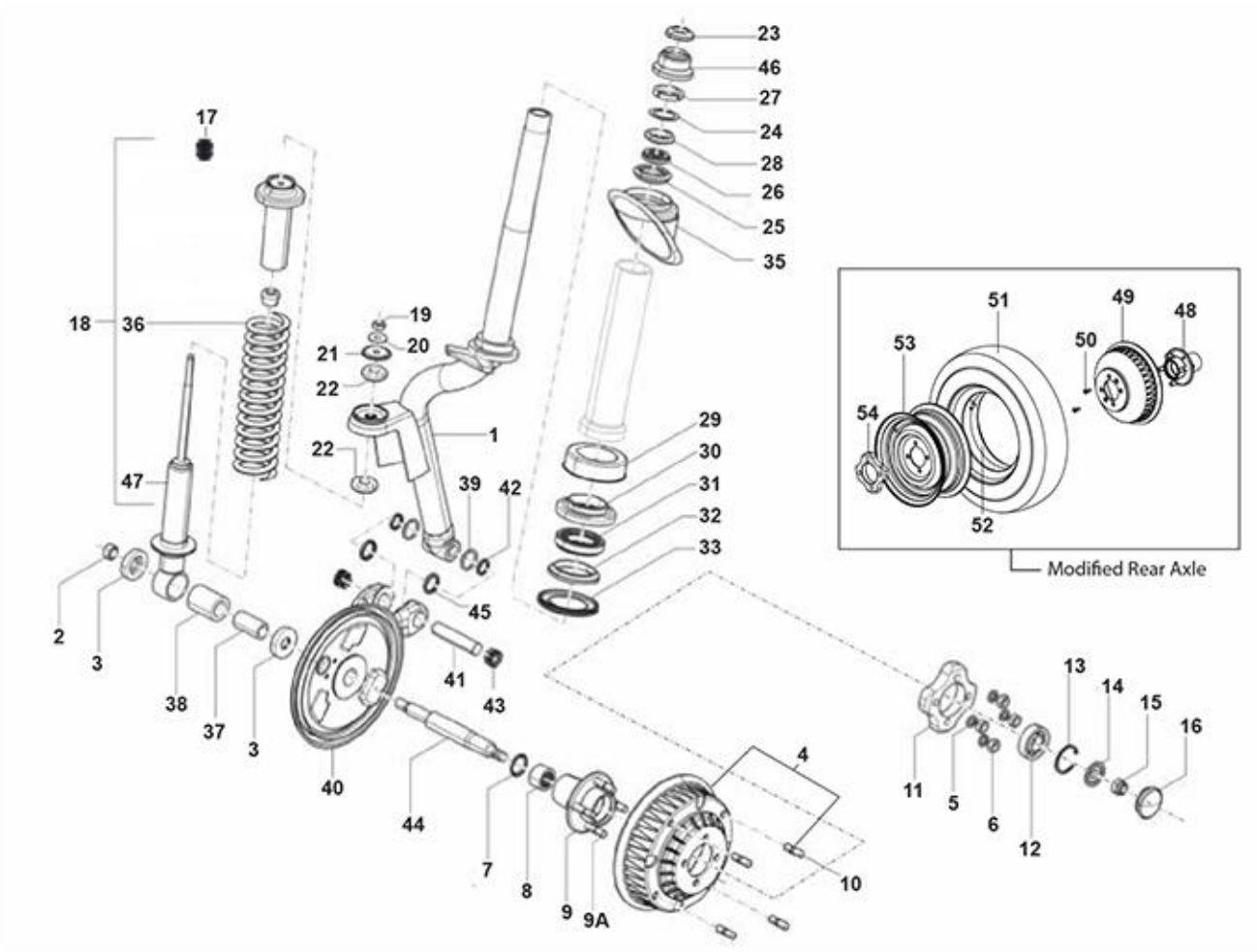
23
46
27
24
28
26
25
35
17
18
36
19
21
20
22
22
1
29
30
31
32
33
47
39
42
45
2
3
38
37
3
41
43
40
44
7
8
9
9A
4
10
11
5
6
12
13
14
15
16
51
49
48
53
50
54
52
Modified Rear Axle

61

Print Date: 07-Apr-2022

PLATE-25

STEERING COLUMN AND FRONT SUSPENSION

Fig. No.	Part No.	Description	Qty	Remarks
34	604759	RUBBER CAP STEERING COLUMN (N.I.)	4	
35	109265	SPLASH GUARD DUST COVER	1	
36	940066	SPRING SHOCK ABSORBER-UG / RING	1	
37	109117	RUBBER BUSH (FRT SHOCK ABSORBER) / RING	1	
38	566545	RUBBER BUSH (FRT SHOCK ABSORBER) - MODIFIED	1	
39	6733	O RING	2	
40	B024113	FRONT BRAKE ASSY.	1	
41	137235	STEERING PIN	1	
42	8771	OIL SEAL (18-24-4)	2	
43	107718	ROLLER BUSH	2	
44	643772R	FRONT WHEEL AXLE	1	
45	150579	RING FOR HOLDING TYPE J F101 17A	2	
46	604758	PROTECTION	1	
47	940065	SHOCK ABSORBER W/O SPRING	1	
48	B077465	FRONT HUB S/A	1	Modified
49	B077245	BRAKE DRUM (CAST IRON)	1	Modified
50	812061656	CSK PHILIPS HEAD SCREW M6 X 16	2	Modified
51	B001315	TYRE (4.0 X 8,4 PR)	1	Modified
52	B001316	INNER TUBE FOR TYRE 4.0 X 8 INCH	1	Modified
53	6C000430	WHEEL RIM ASSY	1	Modified
54	B077461	SPACER DISC FRONT WHEEL MTG (ALUMIN.)	1	Modified

62

Print Date: 07-Apr-2022

PLATE-26

Handle Bar And Control

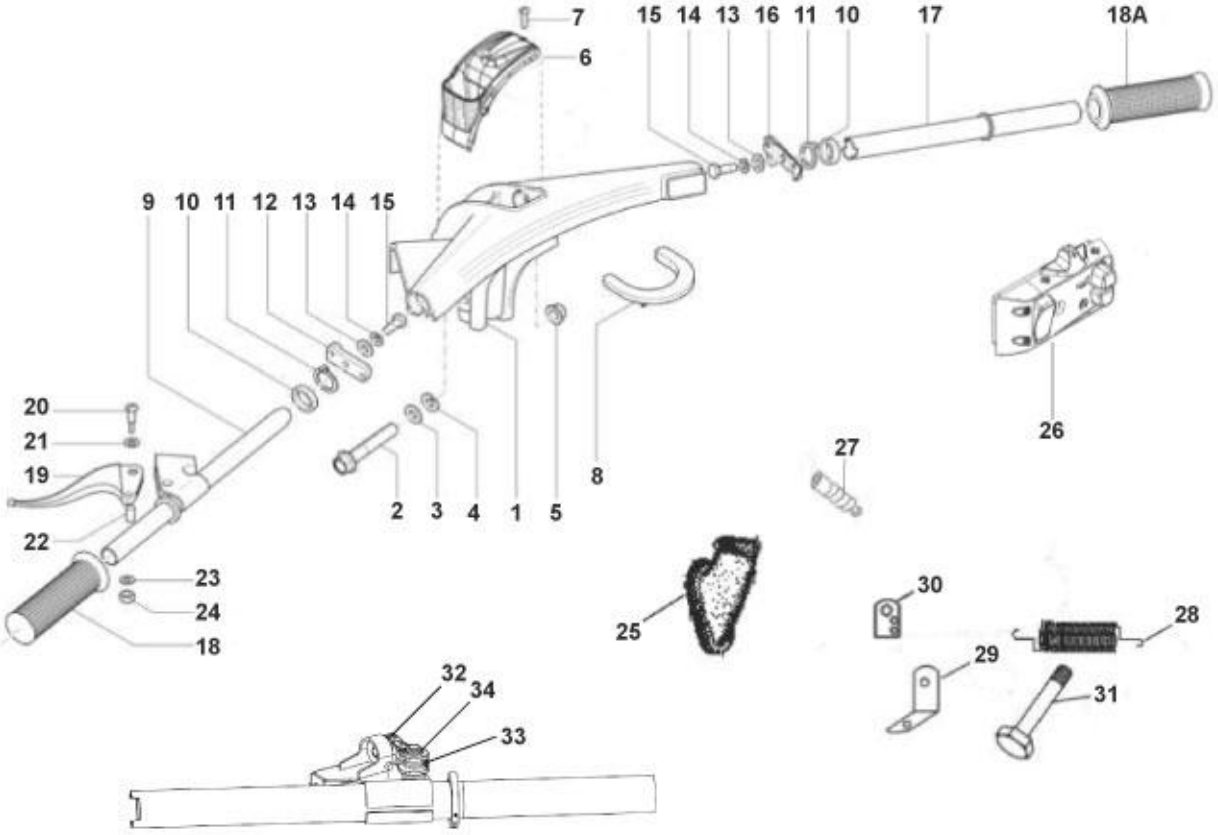
7
6
15 14 13 16 11 10
17
18A
9 10 11 12 13 14 15
20
21
19
22
23
24
18
2 3 4 1 5
8
27
26
25
30
28
29
31
32
34
33

63

Print Date: 07-Apr-2022

PLATE-26

Handle Bar And Control

Fig. No.	Part No.	Description	Qty	Remarks
1	B075687ED	HANDLE BAR BODY-ED	1	
2	30104	MOUNTING BOLT M10 X 75	1	
3	16626	PLAIN WASHER (18X10.5X2)	2	
4	16410	SPRING WASHER	1	
5	20110	HEX NUT M10	1	
6	B073817	COVER	1	
7	632158	CSK HEAD SCREW	1	
8	126902	PROTECTION COLLAR CABLE	1	
9	B078029	TUBE SUB ASSLY. GEAR CONTROL	1	
9	6A000193	TUBE SUB ASSLY. GEAR CONTROL WITH SPACER	1	For LAM HS - Service on 6A000197
9	6A000197	TUBE SUB ASSY WITH PARTS MODI	1	chassis cut off MBX0005AFXD843185
9A	B075313	SCREW FOR CLUTCH LEVER (NEW)	1	chassis cut off MBX0005AFXD843185
10	109404	WASHER OF RABBET(41737)	1	
11	60565	SPRING WASHER	1	
12	109775	GEAR CONTROL LEVER S/A	1	
13	3055	PLAIN WASHER M5	2	
14	016406	SPRING WASHER	2	
15	31089	HEX HEAD SCREW M6X18 CL 8.8	2	
16	109635	THROTTLE CONTROL LEVER WITH IP	1	
17	587902	ACCELERATOR TUBE ASSY.	1	
18	B073848	HANDLE BAR GRIP - LH	2	
18 A	B073849	HANDLE BAR GRIP - RH	1	
19	1E002770	LEVER CLUTCH CONTROL	1	ECN: 500000253294
20	B075313	SCREW FOR CLUTCH LEVER (NEW)	1	
21	16319	BENT SPRING WASHER	1	
22	125181	SPACER	1	
23	16620	PLAIN WASHER	1	
24	12138	NYLOCK NUT M6	1	
25	109227	PROTECTION GROMMET	1	
26	B073850R	HBS (ST. BUTTON) - CITY UPGRADE (NEW) _ALL NUOVO MODEL	1	
27	B076295	PROTECTION BELLOW- GEAR CABLE	2	
28	B006853	SPRING HANDLE BAR	1	
29	B074498	BRACKET	1	
30	B074040	PLATE SPRING MTG. HANDLE BAR	1	
31	30104	MOUNTING BOLT M10 X 75	1	

64

Print Date: 07-Apr-2022

PLATE-26

Handle Bar And Control

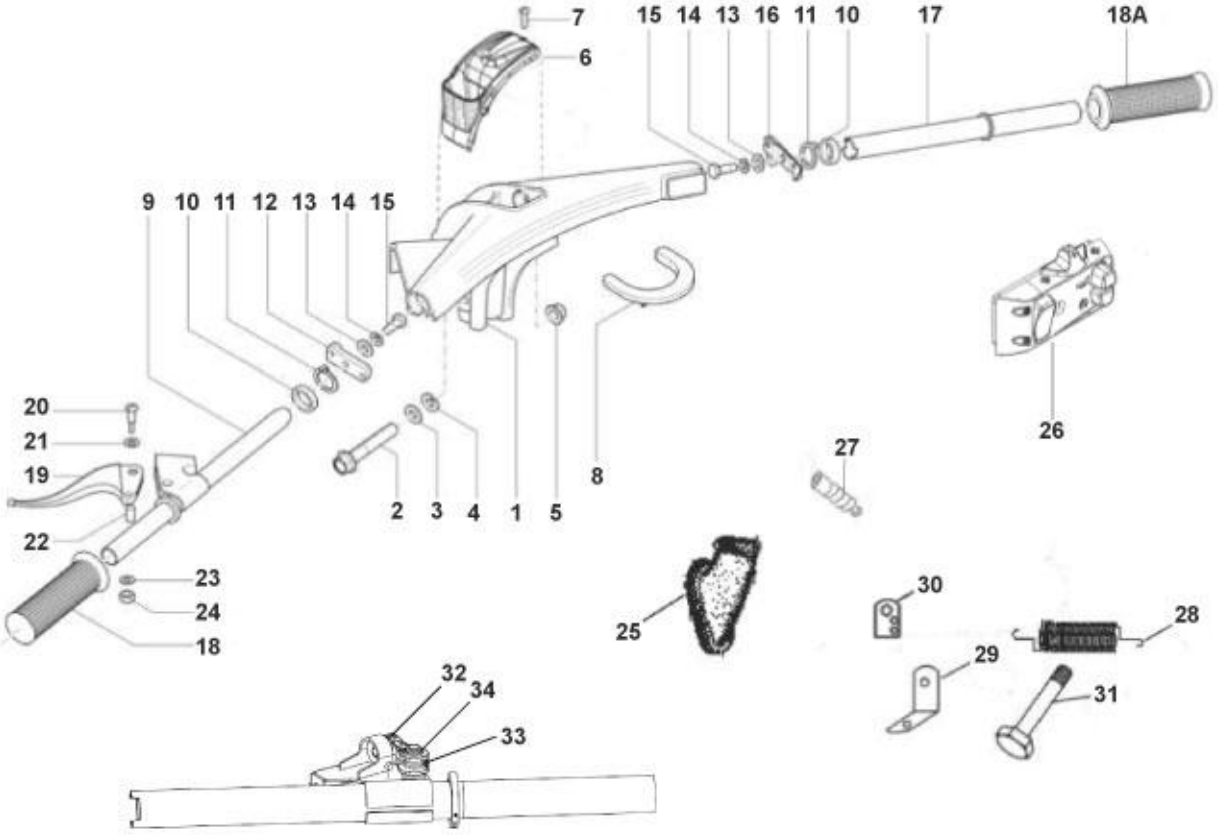
7
6
15 14 13 16 11 10
17
18A
9 10 11 12 13 14 15
20
21
19
22
23
24
18
2 3 4 1 5
8
27
26
25
30
28
29
31
32
34
33

65

Print Date: 07-Apr-2022

PLATE-26

Handle Bar And Control

Fig. No.	Part No.	Description	Qty	Remarks
32	1E002771	LEVER, CLUTCH SWITCH	1	
33	1E002772	SPRING TORSION	1	
34	6A000209	CIRCLIP FOR SHAFT ID 9.3	1	

66

Print Date: 07-Apr-2022

PLATE-27

Brake - Tandem Master Cylinder ,Brake Pipe And Hand Brakes

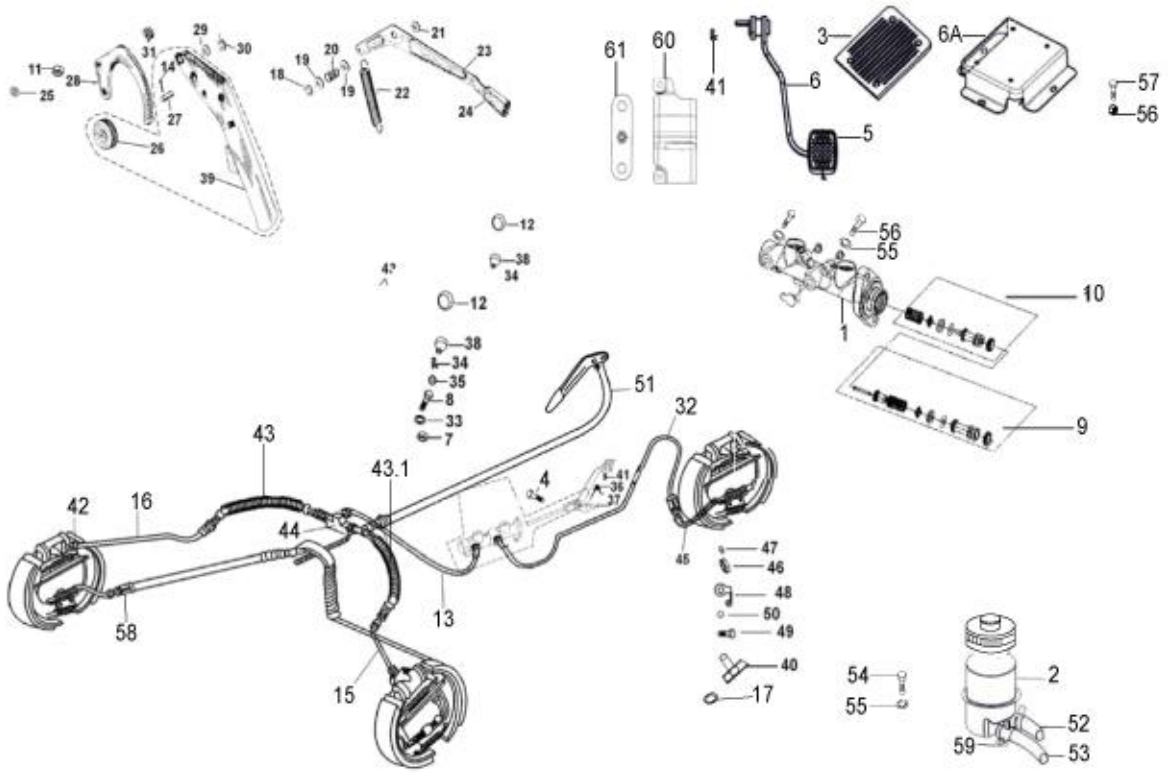
11
25
28
29
30
31
14
27
26
39
18
19
20
19
21
22
23
24
61
60
41
3
6
6A
5
57
56
12
38
34
12
38
34
35
8
33
7
51
32
43
43.1
4
41
36
37
42
16
44
45
47
46
48
50
49
40
17
58
13
15
56
55
1
10
9
54
55
2
52
59
53

67

Print Date: 07-Apr-2022

PLATE-27

Brake - Tandem Master Cylinder ,Brake Pipe And Hand Brakes

Fig. No.	Part No.	Description	Qty	Remarks
1	B075485	TMC ASSY.(19.05)	1	
2	B073788	BRAKE OIL TANK	1	
3	B074024	RUBBER MAT FOR FOOT REST	1	
4	652001	PIN	1	
5	567461	RUBBER PROTECTION FOR PEDAL	1	
6	6C000118	FOOT BRAKE PEDAL	2	
6A	B073538	FOOT REST	1	
7	20108	HEX NUT M8	2	
8	812061656	CSK PHILIPS HEAD SCREW M6 X 16	2	
9	940067	MAJOR KIT TMC (UG)	1	
10	940068	MINOR KIT TMC (UG)	1	
11	20106	HEX NUT M6	2	
12	B042693	CUP RETAINING SPRING (SPLIT TYPE)	2	
13	B075491	BRAKE BUNDY TUBE TMC TO REAR WHEEL	1	
14	567920	SPLIT PIN	3	
15	B075835	BRAKE BUNDY TUBE FOR LH REAR WHEEL	1	
16	B075836	BRAKE BUNDY TUBE FOR RH REAR WHEEL	1	
17	3055	PLAIN WASHER M5	1	
18	5969	CIRCLIP DIA 9 E TYPE	1	
19	6173	METALLIC PLAIN WASHER (808001026)	2	
20	108785	SPRING	1	
21	B042317	SPACER-RC LEVER	1	
22	567690	REVERSE GEAR COUPLING SPRING	1	
23	B076455	LEVER S/ASSLY. REVERSE	1	
24	604717	KNOB FOR R.C.	1	
25	016406	SPRING WASHER	2	
26	B075475	PULLEY FOR HAND BRAKE	1	
27	567899	CLEVIS PIN	1	
28	B042794	RATCHET , HAND BRAKE CONTROL	1	
29	016408	SPRING WASHER	1	
30	6411	EXT CIRCLIP DIA 11	1	
31	20108	HEX NUT M8	1	
32	B075490	BRAKE BUNDY TUBE TMC TO FRONT WHEEL	1	
33	016408	SPRING WASHER	2	
34	567920	SPLIT PIN	1	

68

Print Date: 07-Apr-2022

PLATE-27

Brake - Tandem Master Cylinder ,Brake Pipe And Hand Brakes

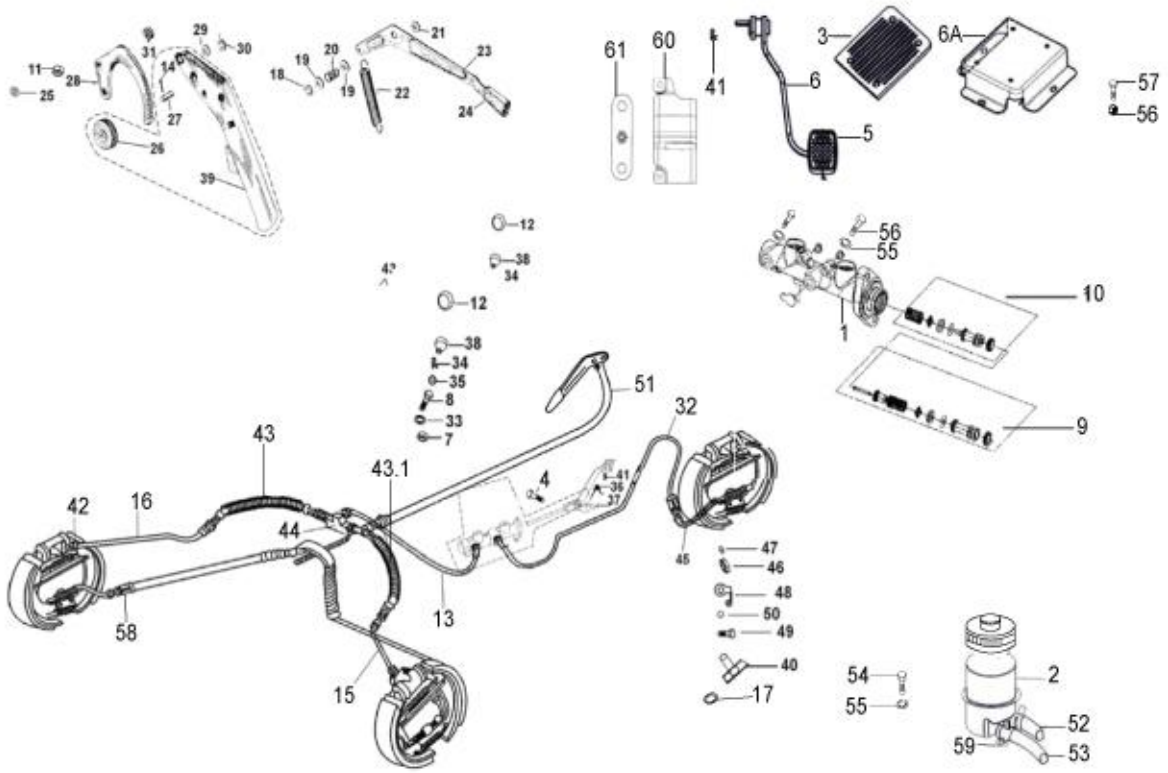
11
25
28
29
30
31
14
27
26
39
18
19
20
19
21
22
23
24
61
60
41
3
6A
6
5
57
56
12
38
34
12
38
34
35
8
33
7
51
32
43
43.1
4
41
36
37
42
16
44
45
47
46
48
50
49
40
17
58
13
15
54
55
2
52
59
53
56
55
1
10
9

69

Print Date: 07-Apr-2022

PLATE-27

Brake - Tandem Master Cylinder ,Brake Pipe And Hand Brakes

Fig. No.	Part No.	Description	Qty	Remarks
35	3058	PLAIN WASHER 15X8.4X1.5	1	
36	B073800	TORSIONAL SPRING	1	
37	229524	WASHER 21X14.3X2	1	
38	138237	CAP	1	
39	B075697	HAND BRAKE CONTROL ASSLY	1	
40	632056	HEX NUT M6	1	
41	568737	SPLIT PIN 4 X 25 (821 0425 2 2)	2	
42	136916	PLATE FOR RETAINING THE BRAKE FLEX. PIPE	3	
43	644814R	FLEXIBLE BRAKE HOSE	2	
43.1	B023786R	FLEXIBLE PIPE FOR REAR WHEEL BRAKE	2	
44	643692	THREE WAY UNION	1	
45	587624R	FLEXIBLE PIPING FOR FRONT WHEEL BRAKE R	1	
46	21216	HEX NUT M16 X 1.5	1	
47	48197	PL WASHER 24X16X1.5	13	
48	B003228	LOCK PLATE FRONT BRAKE HOSE	1	
49	661229	BANJO BOLT	1	
50	604910	COPPER WASHER FEED PUM	1	
51	B041774	PARKING BRAKE CABLE ASSY	1	
52	B075488	TUBE NO-1-BRAKE OIL TANK TO TMC	1	
53	B075489	TUBE NO-2 -BRAKE OIL TANK TO TMC	1	
54	B074999	HEX BOLT	2	NS
55	013880	PLAIN WASHER	4	
56	20104	HEX NUT M4	4	
57	31088	HEX HD SCREW M6 X 16 CL 8.8 (811061623)	4	
58	B076007	PIPE CLIP 1 WAY	6	
59	B075838	CLAMP	2	
60	B075949	TMC PROTECTIVE SHIELD	1	
61	B075950	TMC SHIELD MTG. BKT.	1	
62	B075700	CLIP (14.5)	1	

70

Print Date: 07-Apr-2022

PLATE-28
ELECTRICAL DEVICES

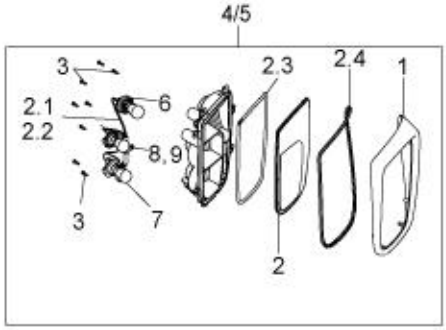
4/5
3
2.1
2.2
6
8,9
3
7
2.3
2.4
1
2

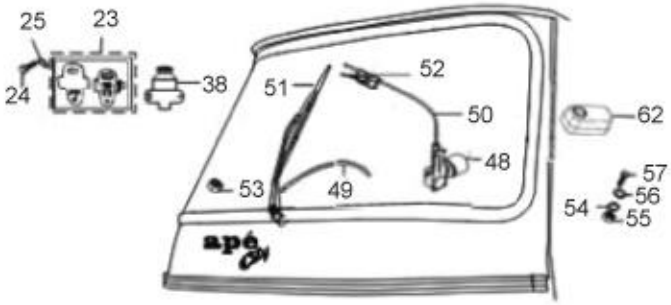
25
23
24
38
51
52
50
62
48
53
49
57
56
54
55

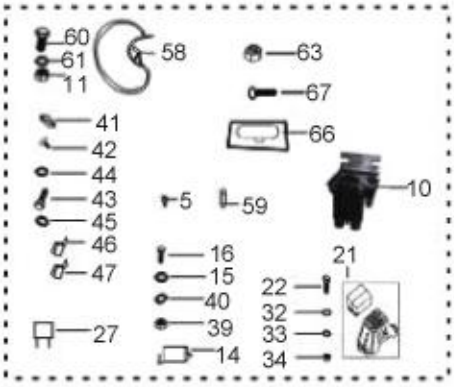
60
61
11
58
63
67
41
42
44
43
45
46
47
66
10
5
59
16
15
40
39
14
21
22
32
33
34
27

18
19
13

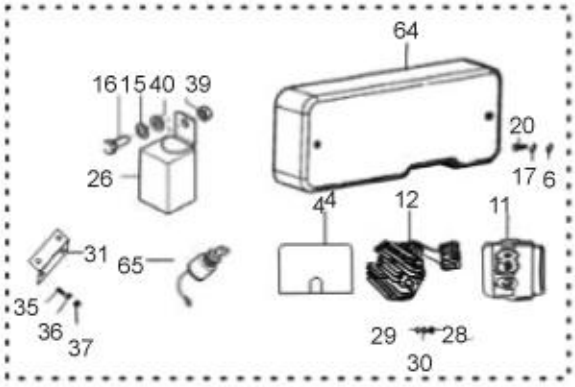
64
16
15
40
39
20
26
17
6
4
12
11
31
65
35
36
37
29
28
30

70
69

71

Print Date: 07-Apr-2022

PLATE-28
ELECTRICAL DEVICES

Fig. No.	Part No.	Description	Qty	Remarks
1	6D000423	OUTER BEZEL WITH RUBBER BEADING LH	1	BLACK
1	6D000432	OUTER BEZEL WITH RUBBER BEADING RH	1	BLACK
1	6D000387	OUTER BEZEL WITH RUBBER BEADING RH	1	PULSER GREY
1	6D000388	OUTER BEZEL WITH RUBBER BEADING LH	1	PULSER GREY
2	6D000420	COMPLETE LENS LH	1	
2	6D000421	COMPLETE LENS RH	1	
2.1	6D000424	WIRE ASSY (WITHOUT REVERSE)	2	
2.2	6D000435	WIRE ASSY(WITH REVERSE)	2	
2.3	6D000426	GASKET INBUILT LENS AND HOUSING	2	
2.4	6D000437	RUBBER BEADING	2	Under Development
3	6D000425	SCREW 3.5X10	16	
4	B073492	PLASTIC COVER-ELECTRICAL CLUSTER	1	
5	604557	FUSE (10A)	6	
6	3055	PLAIN WASHER M5	1	
7	925584	BULB 12 V 21W CLEAR (PARKING AND INDICATOR)	2	
7	567700	BULB 10/5W (STOP LIGHT)	2	
7	6D000429	BULB 12V PY21W	2	
7.1	6D000427	BULB 12V P21/5W	2	
7.2	6D000428	BULB 12V P21W	2	
8	B076209	TAIL LAMP _ASSLY _LH CITY	1	Bazel- Black Colour
8	6D000199	TAIL LAMP ASSLY LH WITH/OUT REVERSE FUCTION	1	EXPORT
9	B076210	TAIL LAMP _ASSLY _RH CITY	1	Bazel- Black Colour
10	587671R	4 ST RELAY SOLENOID	1	
11	1A009251	CDI - PETROL	1	PTL
11	1A009352	CDI - LPG	1	LPG
11	1D000510	ELECTRONIC STARTER UNIT	1	for LAM(HS)PTL
11	1D001418	ELECTRONIC STARTER UNIT(LAM) - PURPLE COLOUR	1	for LAM (HS)_LPG
12	1D000671R	VOLTAGE REGULATOR	1	
13	6B000140	LICENSE/NUMBER PLATE BLACK COLOUR EXP	1	
14	B023727R	CONTACTOR	1	
15	12546	PLAIN WASHER / MULTI TOOTH LOCK WASHER M5	1	
16	31057	HEX HEAD SCREW M5 X 14 CL 8.8	1	
17	568721	SPRING WASHER M4	2	
18	639088	TAIL LAMP	1	E - Marked (Export)
19	71633	STOP AND PARKING BULB 12V 10/5 W	1	

72

Print Date: 07-Apr-2022

PLATE-28
ELECTRICAL DEVICES

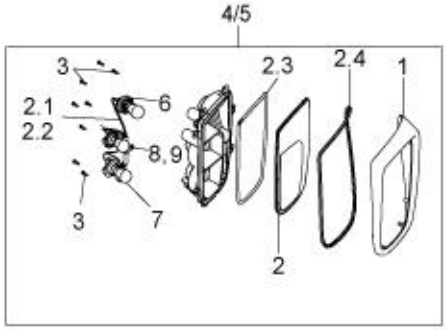
4/5
3
2.1
2.2
6
8,9
3
7
2.3
2.4
1
2

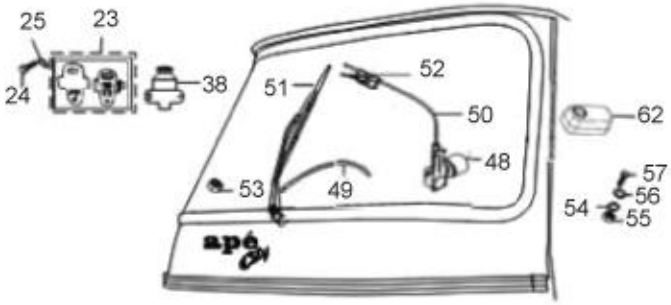
25
23
24
38
51
52
50
62
48
53
49
57
56
54
55

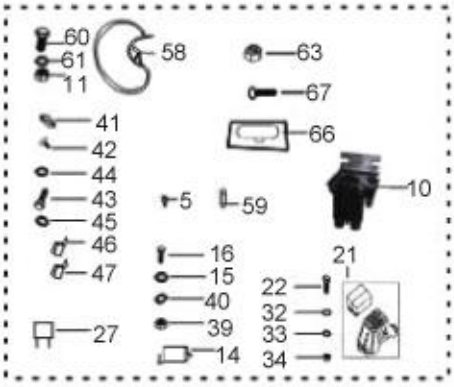
60
61
11
58
63
67
41
42
44
43
45
46
47
66
10
5
59
16
15
40
39
14
21
22
32
33
34
27

18
19
13

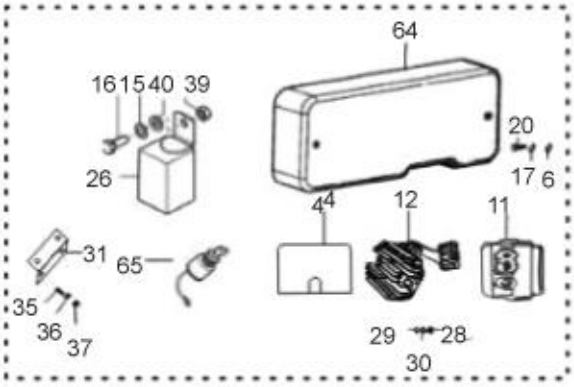
64
16
15
40
39
20
26
17
6
4
12
11
31
65
35
36
37
29
28
30

70
69

73

Print Date: 07-Apr-2022

PLATE-28
ELECTRICAL DEVICES

Fig. No.	Part No.	Description	Qty	Remarks
20	8451	PAN SELF TP SCREW 6 SGX13 AB	2	
21	567581	FOUR POLE FUSE BOX	1	
22	31058	HEX HEAD SCREW M5 X 16 CC8.8	2	
23	567498R	BRAKE/REVERSE LIGHT SW (INTEGRAL CAP)-PAV	2	
24	15996	PHIL RD HD SCREW M4X12	2	
25	003054	PLAIN WASHER	2	
26	B023727R	CONTACTOR	1	
27	567706	FUSE 30 A	1	
28	12136	NUT / NYLOCK NUT M5	2	
29	6078	PLAIN WASHER 12 X 5.2 X 1	2	
30	16405	SPRING WASHER M5	2	
31	B075693	MTG BKT ONE WAY FUSE - HOLDER	1	
32	3055	PLAIN WASHER M5	2	
32	6078	PLAIN WASHER 12 X 5.2 X 1	2	
33	6965	SPRING WASHER DIA 5	2	
34	20105	PLAIN NUT M5	2	
35	31058	HEX HEAD SCREW M5 X 16 CC8.8	22	
36	6965	SPRING WASHER DIA 5	2	
37	20105	PLAIN NUT M5	2	
38	567498R	BRAKE/REVERSE LIGHT SW (INTEGRAL CAP)-PAV	21	
39	20105	PLAIN NUT M5	1	
40	3055	PLAIN WASHER M5	1	
41	B075693	MTG BKT ONE WAY FUSE - HOLDER	1	
42	568692	PAN SELF TAP SCREW 6SG X 16AB	1	
43	31088	HEX HD SCREW M6 X 16 CL 8.8 (811061623)	1	
44	3056	PLAIN WASHER M6 OD12	1	
45	016406	SPRING WASHER	1	
46	680166	SAFETY STARTER RELAY	1	
47	B023727R	CONTACTOR	1	
48	B073685	WIPER MOTOR ASSY. WITH MTG. BKT.	1	
49	B073821	BUNDY TUBE OUTER (UP)	1	
50	B073682	WIPER BUNDY - MOTOR TO WHEEL BOX	1	
51	B073600	WIPER ARM & BLADE ASSY	1	
52	569197	WHEEL BOX ASSY. (MOD.)	1	
53	569165	DOME NUT	1	

74

Print Date: 07-Apr-2022

PLATE-28
ELECTRICAL DEVICES

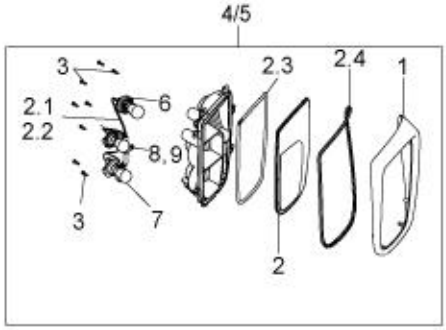
4/5
3
2.1
2.2
6
8,9
3
7
2.3
2.4
1
2

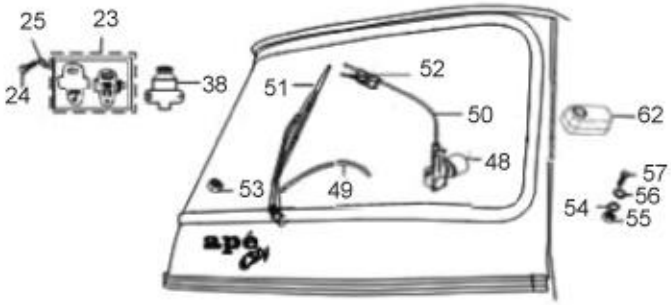
25
23
24
38
51
52
50
62
48
53
49
57
56
54
55

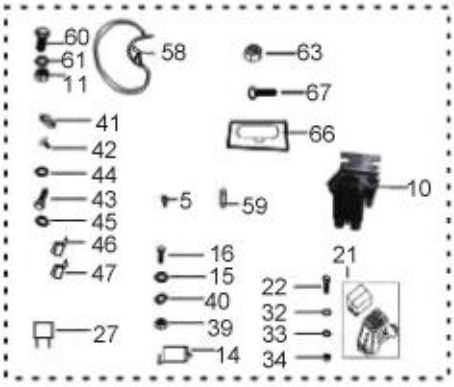
60
61
11
58
63
67
41
42
44
43
45
46
47
66
10
5
59
16
15
40
39
14
21
22
32
33
34
27

18
19
13

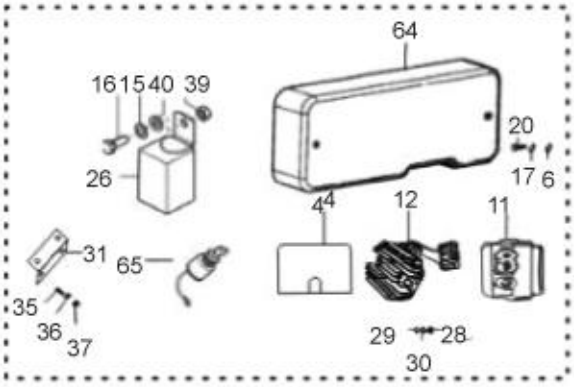
64
16
15
40
39
20
26
17
6
4
12
11
31
65
35
36
37
29
28
30

70
69

75

Print Date: 07-Apr-2022

PLATE-28
ELECTRICAL DEVICES

Fig. No.	Part No.	Description	Qty	Remarks
54	016406	SPRING WASHER	1	
55	20106	HEX NUT M6	6	
56	3056	PLAIN WASHER M6 OD12	6	
57	31088	HEX HD SCREW M6 X 16 CL 8.8 (811061623)	6	
58	B078212	BATTERY CABLE +VE-BATT. TO 4ST (CITY)	1	
59	925786	ECU - FUSE (2A) (N.I)	1	LPG/CNG
60	31088	HEX HD SCREW M6 X 16 CL 8.8 (811061623)	2	
61	016406	SPRING WASHER	2	
62	B073715	CABIN LAMP	1	
63	20106	HEX NUT M6	2	
64	B073492	PLASTIC COVER-ELECTRICAL CLUSTER	1	
65	B024532	KEY IGNITION SWITCH W/COUPLER (PAVNA)	1	
66	B074491	ENGINE COMPARTMENT LAMP WITH PIGTAIL (UP)	1	
67	B074539	PHILIPS COUNTER HEAD SCREW	2	
68	B076308	RUBBER SPACER (LIGHT RAGISTRATION LAMP)	1	
69	640762	PUSH BUTTON REVERSE	1	
70	642032	PUSH BUTTON-CLUTCH	1	

76

Print Date: 07-Apr-2022

PLATE-29
Front Fascia

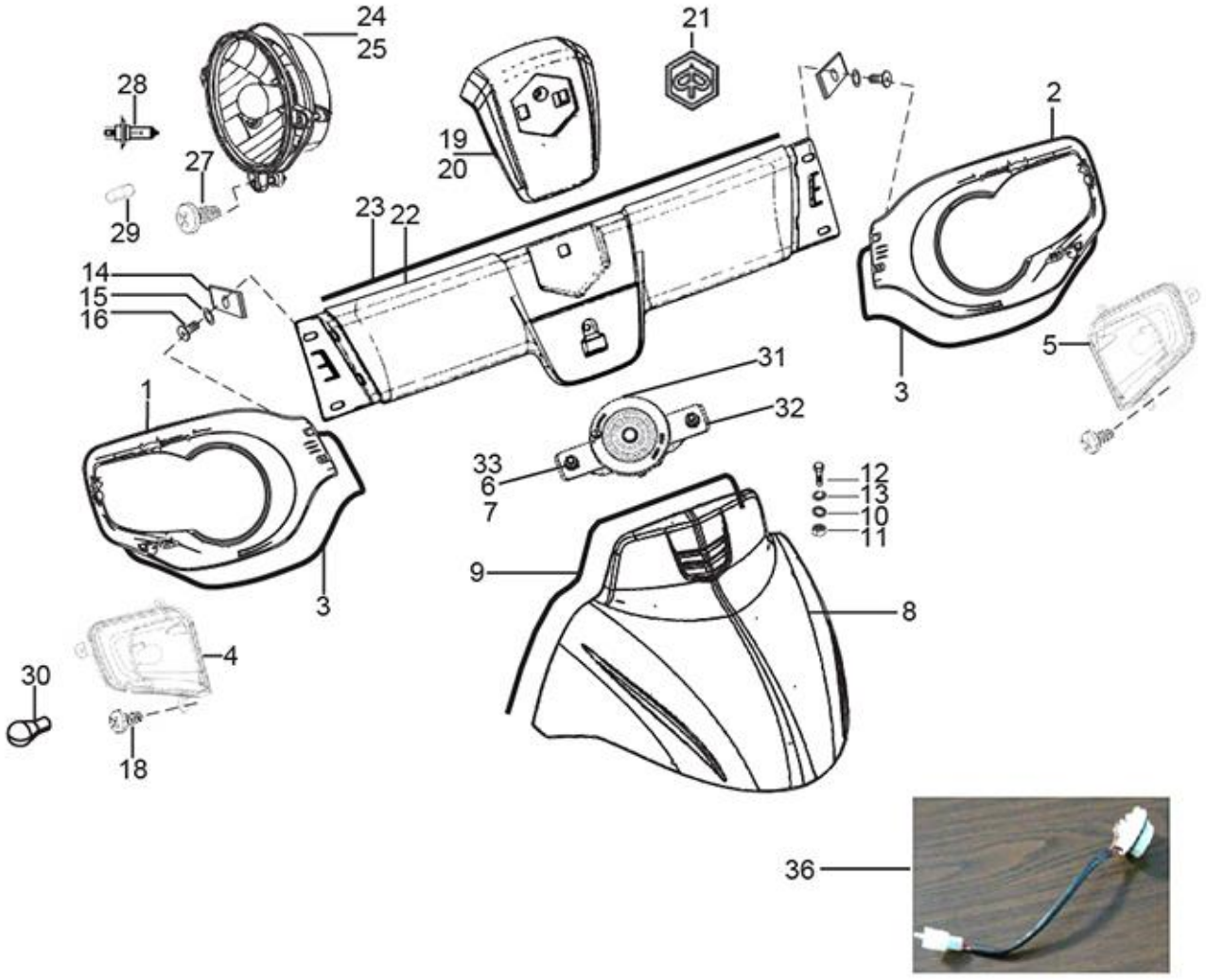
24
25
21
28
19
20
2
27
29
23
22
14
15
16
5
31
1
32
3
33
6
7
12
13
10
11
9
8
3
4
30
18
36

77

Print Date: 07-Apr-2022

PLATE-29

Front Fascia

Fig. No.	Part No.	Description	Qty	Remarks
1	B074434	BEZEL_HEADLAMP BLINKER (RH)	1	E - Marked (Export)
2	B074433	BEZEL_HEADLAMP BLINKER (LH)	1	E - Marked (Export)
3	B073969	HL BEZEL BEADING	2	
4	6D000146R	FRONT DIRECTION INDICATORS RH	1	E - Marked (Export)
4A	B078272	BLINKER HOUSING (RH)-(HOUSING + GLASS)	1	
5	6D000145R	FRONT DIRECTION INDICATORS LH	1	E - Marked (Export)
5A	B078274	BLINKER HOUSING (LH)-(HOUSING + GLASS)	1	
6	3056	PLAIN WASHER M6 OD12	4	
7	20106	HEX NUT M6	4	
8	B073882WR	FRONT MUDGUARD - PAINTED-WR	1	
8	B073882BW	FRONT MUDGUARD - PAINTED-BW	1	
8	B073882GY	FRONT MUDGUARD - PAINTED - GY	1	
8	B073882CB	FRONT MUDGUARD - PAINTED -CB	1	
8	B073882EG	FRONT MUDGUARD - PAINTED - EG	1	
8	B073882NB	FRONT MUDGUARD - PAINTED - NB	1	
8	B073882BL	FRONT MUDGUARD - PAINTED - BL	1	
9	B074063	GASKET FOR FRONT MUDGUARD	1	
10	013880	PLAIN WASHER	8	
11	20106	HEX NUT M6	4	
12	31089	HEX HEAD SCREW M6X18 CL 8.8	4	
13	78307	BENT SPRING WASHER M6	4	
14	8080	SPRING PLATE	4	
15	3055	PLAIN WASHER M5	10	
16	660168	PAN SELF TP. SCREW 10 SGX13AB	5	
17	157716	SCREW ANCHORE	8	
18	B074539	PHILIPS COUNTER HEAD SCREW	4	
19	B073875	LOGO SUPPORT - NOT PAINTED	1	
20	B073875SL	LOGO SUPPORT - PAINTED	1	
21	B076120	HEXAGONAL EMBLEM	1	
22	B073872	CENTRAL FACIA	1	
23	B073970	CENTRAL FACIA BEADING UPPER	1	
24	6D000143R	HEAD LAMP ASSLY LH - NUOVO	1	E - Marked (Export)
25	6D000144R	HEAD LAMP ASSLY - RH (NUOVO)	1	E - Marked (Export)
26	119735	PROTECTION SECURING SPRING/SPR. FOR PROTECTION	2	
27	15900	HEAD LAMP SECURING SCREW/PAN SELF TAP SCREW	6	

78

Print Date: 07-Apr-2022

PLATE-29
Front Fascia

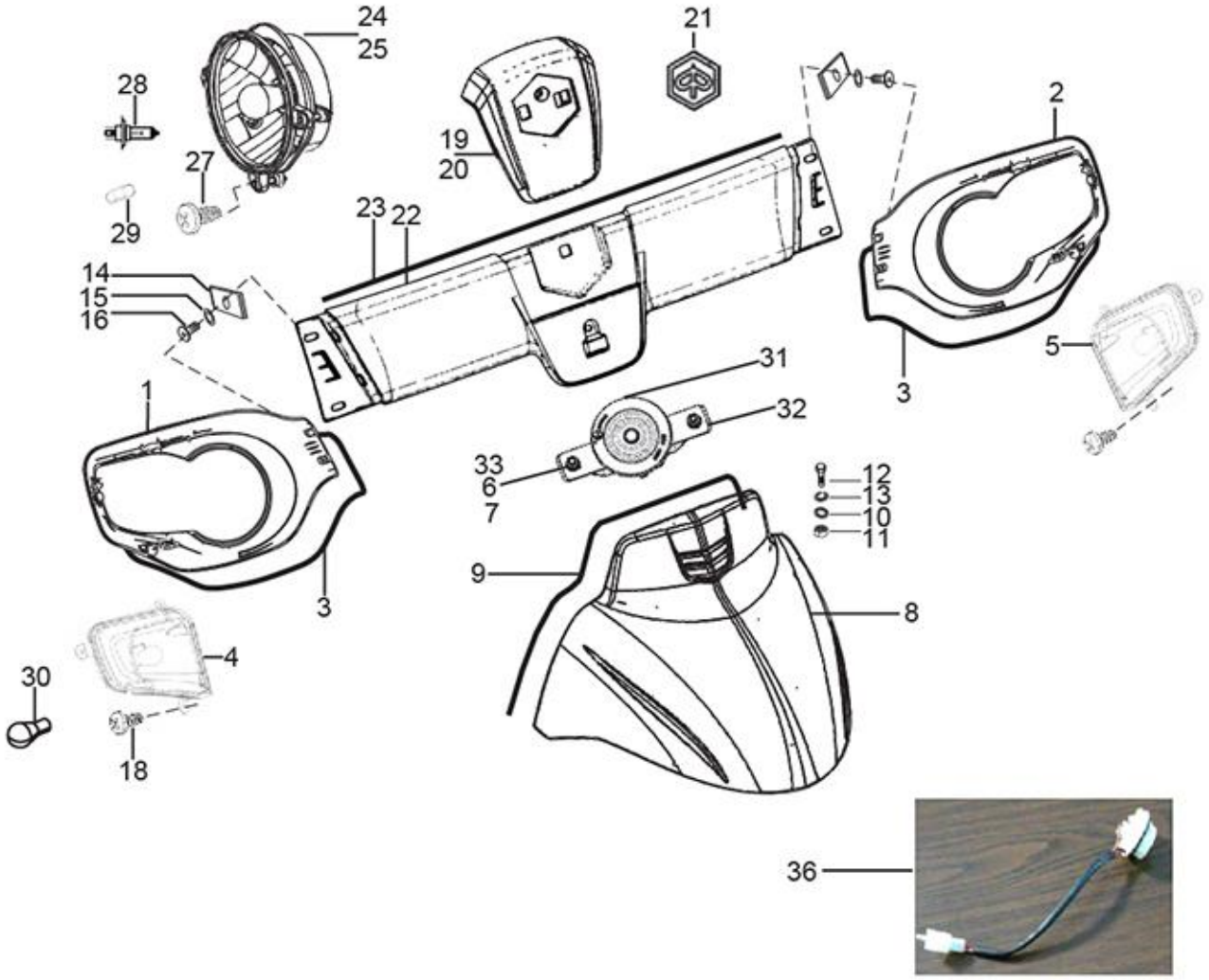
24
25
21
28
19
20
2
27
29
23
22
14
15
16
5
31
1
32
3
33
6
7
12
13
10
11
9
8
3
4
30
18
36

79

Print Date: 07-Apr-2022

PLATE-29

Front Fascia

Fig. No.	Part No.	Description	Qty	Remarks
28	B078286R	HS1_BULB (12 V _35/35W	2	
29	567593	BULB 12V 5W / LAMP 4W	2	
30	925581	INDICATOR LIGHT BULB 12V 21W AMBER COLOUR	2	
31	B074033	HORN ASSLY(DIA 70)	1	E - Marked (Export)
32	B073953	HORN MTG. BKT S/A	1	
33	016406	SPRING WASHER	4	
34	3056	PLAIN WASHER M6 OD12	4	
35	20106	HEX NUT M6	4	
36	940162	BULB HOLDER WITH PIGTAILS	2	

80

Print Date: 07-Apr-2022

PLATE-30

PASSENGER AUTO RIKSHA BODY

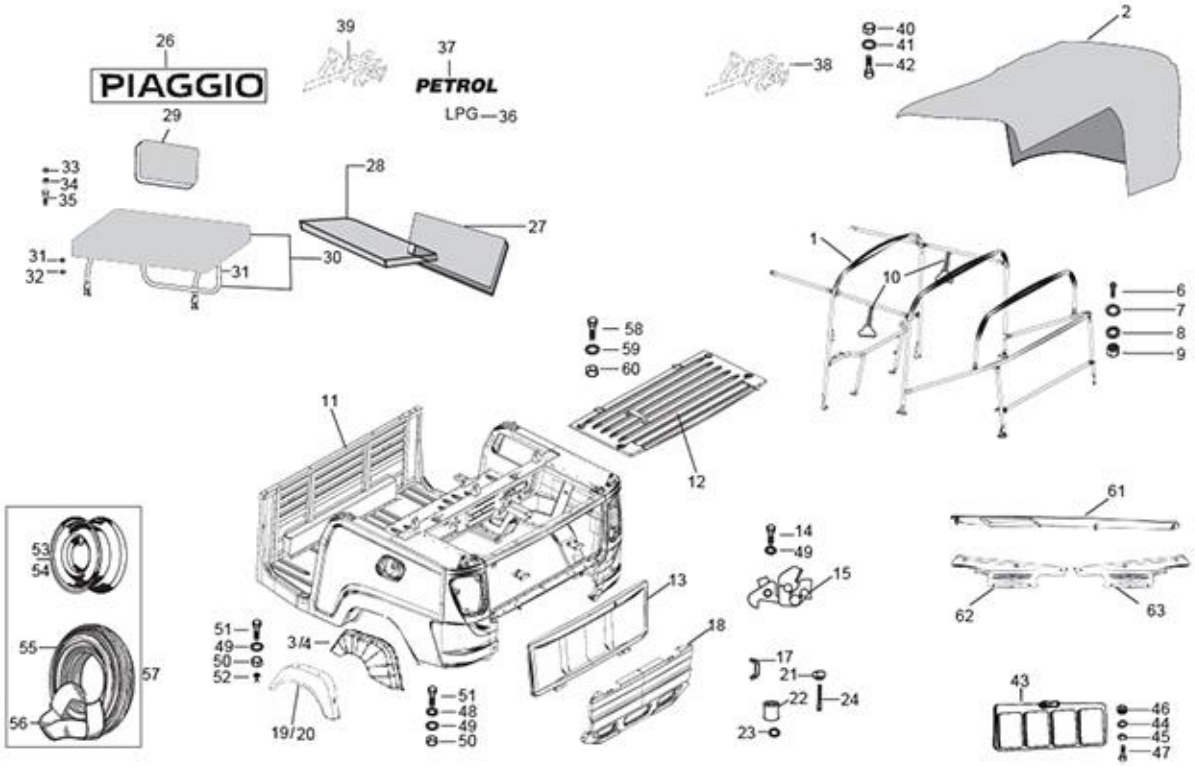
26
PIAGGIO
39
37
PETROL
LPG—36
38
40
41
42
2
29
33
34
35
28
27
31
32
30
31
1
10
6
7
8
9
58
59
60
11
12
61
53
54
55
57
56
14
49
15
13
62
63
51
49
50
52
3/4
18
17
21
22
24
23
19/20
51
48
49
50
43
46
44
45
47

81

Print Date: 07-Apr-2022

PLATE-30

PASSENGER AUTO RIKSHA BODY

Fig. No.	Part No.	Description	Qty	Remarks
1	KIT95125R	APE CITY DLX BSVI HOOD STRUCTURE	1	Applicable for Export
1	KIT96048R	KIT HOOD FRAME ASSLY CITY DLX EXPORT AND UPPER STRIP	1	Applicable for P&C Export
1	KIT96035R	KIT HOOD FRAME ASSLY_APE CITY DLX BS-IV	1	Applicable for Domestic
2	B076258	SOFT TOP ASSLY COLOUR BLACK (CLOSE) BSIV	1	Applicable for Domestic
2	B076260	SOFT TOP ASSLY YELLOW COLOUR (CLOSE) BSIV	1	Applicable for Domestic
2	6B002468R	SOFT TOP ASSEMBLY - FR	1	for Export P/N Comn for all Colour Code
2	B076265	SOFT TOP ASSLY COLOUR GREEN (CLOSE) BSIV	1	
2	B076267	SOFT TOP ASSLY COLOUR WHITE (CLOSE)BSIV	1	
2	B076269	SOFT TOP ASSLY BROWN COLOUR (CLOSE) BSIV	1	
2	6B002949	SOFT TOP ASSEMBLY (BLACK)	1	For Exp.-Black
2	6B002950	SOFT TOP ASSEMBLY (YELLOW-BLACK INNER)	1	For Exp.-Yellow
2	6B002951	SOFT TOP ASSEMBLY (GREY)	1	For Exp.-Grey
2	6B002952	SOFT TOP ASSEMBLY (GREEN)	1	For Exp.-Green
2	6B002953	SOFT TOP ASSEMBLY (WHITE)	1	For Exp.-White
2	6B002954	SOFT TOP ASSEMBLY (BROWN)	1	For Exp.-Brown
3	B041397	COVER INNER MUDGAURD RH	1	
4	B041398	COVER INNER MUDGAURD LH	1	
5	3055	PLAIN WASHER M5	4	
6	31088	HEX HD SCREW M6 X 16 CL 8.8 (811061623)	22	
7	3056	PLAIN WASHER M6 OD12	22	
8	016406	SPRING WASHER	22	
9	632056	HEX NUT M6	22	
10	B073598	HANDLE CANOPY STRAP	1	
11	B075560BL	PASS.BODY APE CITY DLX BSIV PTL-BL	1	
11	B075560CB	PASS.BODY APE CITY DLX BSIV PTL-CB	1	
11	B075560EG	PASS.BODY APE CITY DLX BSIV PTL-EG	1	
11	B075560GY	PASS.BODY APE CITY DLX BSIV PTL-GY	1	
11	B075560WR	PASS.BODY APE CITY DLX BSIV PTL-WR	1	
11	B075560NB	PASS.BODY APE CITY DLX BSIV PTL-NB	1	
11	B075500	PASS.BODY APE CITY DLX BSIV (CNG/LPG)-BL	1	
11	B075500CB	PASS.BODY APE CITY DLX BSIV (CNG/LPG)-CB	1	
11	B075500EG	PASS.BODY APE CITY DLX BSIV (CNG/LPG)-EG	1	
11	B075500GY	PASS.BODY APE CITY DLX BSIV (CNG/LPG)-GY	1	
11	B075500WR	PASS.BODY APE CITY DLX BSIV (CNG/LPG)-WR	1	
11	B075500NB	PASS.BODY APE CITY DLX BSIV (CNG/LPG)-NB	1	

82

Print Date: 07-Apr-2022

PLATE-30
PASSENGER AUTO RIKSHA BODY

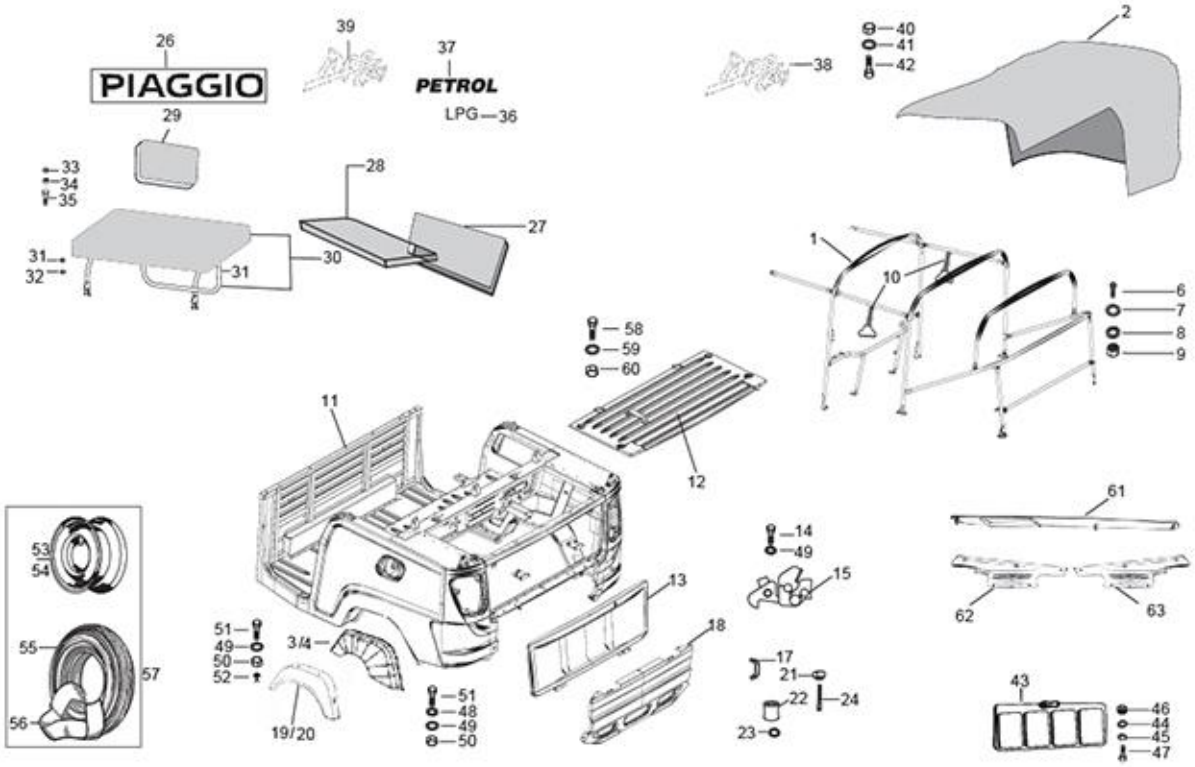
26
PIAGGIO
39
37
PETROL
LPG — 36
38
40
41
42
2
29
33
34
35
28
27
31
32
31
30
1
10
6
7
8
9
58
59
60
11
12
61
53
54
55
57
56
14
49
15
13
62
63
51
49
50
52
3/4
18
17
21
22
24
23
19/20
51
48
49
50
43
46
44
45
47

83

Print Date: 07-Apr-2022

PLATE-30

PASSENGER AUTO RIKSHA BODY

Fig. No.	Part No.	Description	Qty	Remarks
12	B075724ED	ENGINE COMP DOOR ASSLY	1	
12	B075562ED	ENGINE COMP DOOR ASSLY (CNG/LPG)	1	
13	B075531ED	TAIL GATE ASSY.	1	
14	645037	HEX HEAD SCREW M8 X 22 CL 8.8	7	
15	B076069	LATCH-TAIL GATE	1	
16	3058	PLAIN WASHER 15X8.4X1.5	4	
17	B076069	LATCH-TAIL GATE	2	
18	B077970ED	ASSLY VISUAL BARRIER BSIV	1	
19	B073853	RR MUDGUARD RH	1	
20	B073852	MUDGUARD REAR LH	1	
21	B001423	KNOB REAR DOOR	2	NOT APPLICABLE
22	B079308	RUBBER STOPPER TAIL GATE	2	
23	16670	PLAIN WASHER 12X4.5X1	2	
24	B001402	SCREW FOR DOOR KNOB	2	
25	12790	SPLIT PIN	2	
26	B078925	PIAGGIO STICKER (VISUAL BARRIER	1	
27	B024512	PASSENGER BACKREST	1	
28	B024516	PASS DRIVER SEAT ASSY (CNG/LPG)	1	
29	B074594	DRIVER BACK REST ASSY	1	
30	B075614	DRIVER SEAT ASSY COMPLETE	1	
31	016408	SPRING WASHER	6	
32	3058	PLAIN WASHER 15X8.4X1.5	6	
33	2383	PLAIN WASHER M20X8.5X2	4	
34	20108	HEX NUT M8	2	
35	31119	HEX HD SCREW M8 X 25	2	
36	B041584	STICKER FOR LPG	1	
37	B003652	PLATE PETROL	1	
38	B078919	APE CITY STICKER (FRONT PANEL)	1	
39	B078924	APE CITY STICKER (TAILGATE)	1	
40	20108	HEX NUT M8	2	
41	116831	PLAIN METALLIC WASHER (826000828)	4	
42	30072	HEX HEAD BOLT M8 X 35	2	
43	B041054	MUD FLAP FRONT	1	
44	013880	PLAIN WASHER	4	
45	016406	SPRING WASHER	4	

84

Print Date: 07-Apr-2022

PLATE-30

PASSENGER AUTO RIKSHA BODY

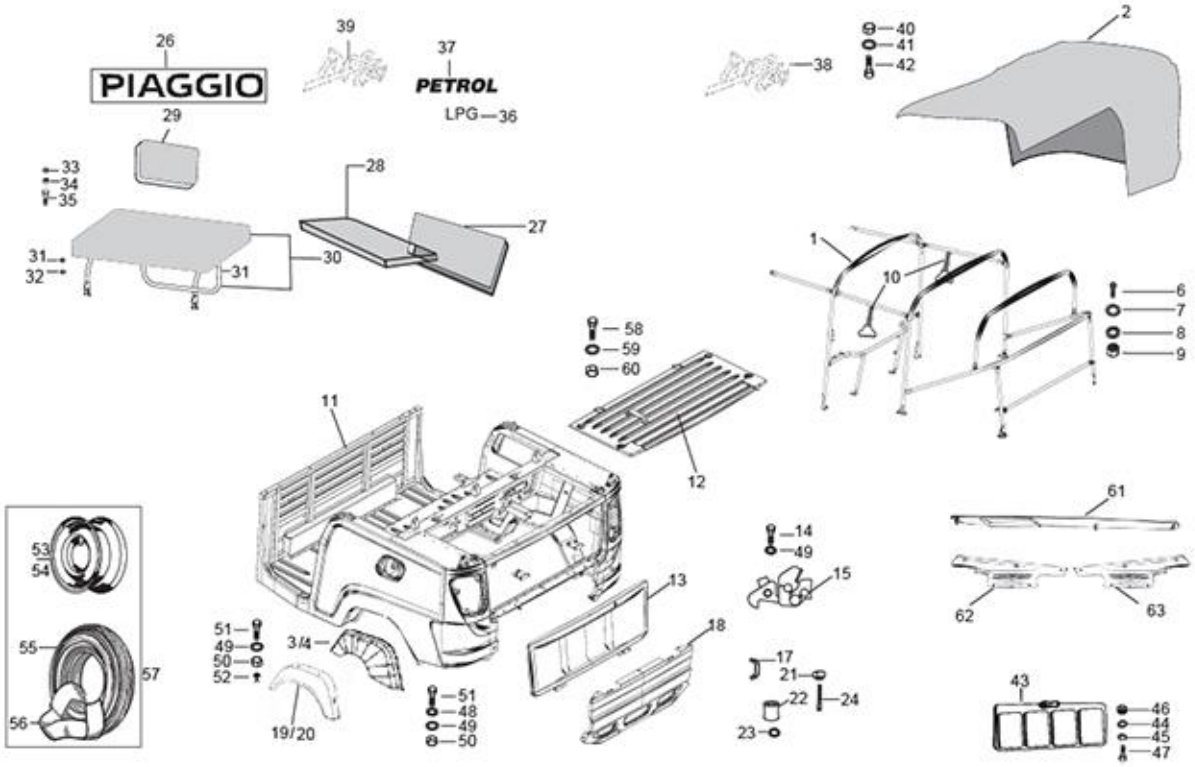
26
PIAGGIO
39
37
PETROL
LPG — 36
38
40
41
42
2
29
33
34
35
28
27
31
32
30
31
1
10
6
7
8
9
58
59
60
11
12
61
53
54
55
57
56
14
49
15
13
62
63
51
49
50
52
3/4
18
17
21
22
24
23
19/20
51
48
49
50
43
46
44
45
47

85

Print Date: 07-Apr-2022

PLATE-30

PASSENGER AUTO RIKSHA BODY

Fig. No.	Part No.	Description	Qty	Remarks
46	20106	HEX NUT M6	4	
47	31088	HEX HD SCREW M6 X 16 CL 8.8 (811061623)	4	
48	013880	PLAIN WASHER	8	
49	16405	SPRING WASHER M5	8	
50	20106	HEX NUT M6	8	
51	31088	HEX HD SCREW M6 X 16 CL 8.8 (811061623)	5	
52	604603	RIVET	5	
53	B074588R	WHEEL RIM ASSLY INNER - PAINTED	1	
54	B074590R	WHEEL RIM OUTTER - PAINTED	1	
55	B001315	TYRE (4.0 X 8,4 PR)	4	
56	B001316	INNER TUBE FOR TYRE 4.0 X 8 INCH	4	
57	B001317	TYRE & TUBE ASSEMBLY	4	
58	31116	HEX HD. SCREW M8X16	2	
59	3058	PLAIN WASHER 15X8.4X1.5	2	
60	20108	HEX NUT M8	2	
61	B075952	COVER PLASTIC PLATE PASS BODY	1	NOT APPLICABLE
62	B075984	FOOT STEP COVER RH	1	
63	B075985	FOOT STEP COVER LH	1	

86

Print Date: 07-Apr-2022

PLATE-31
Wiring Harness

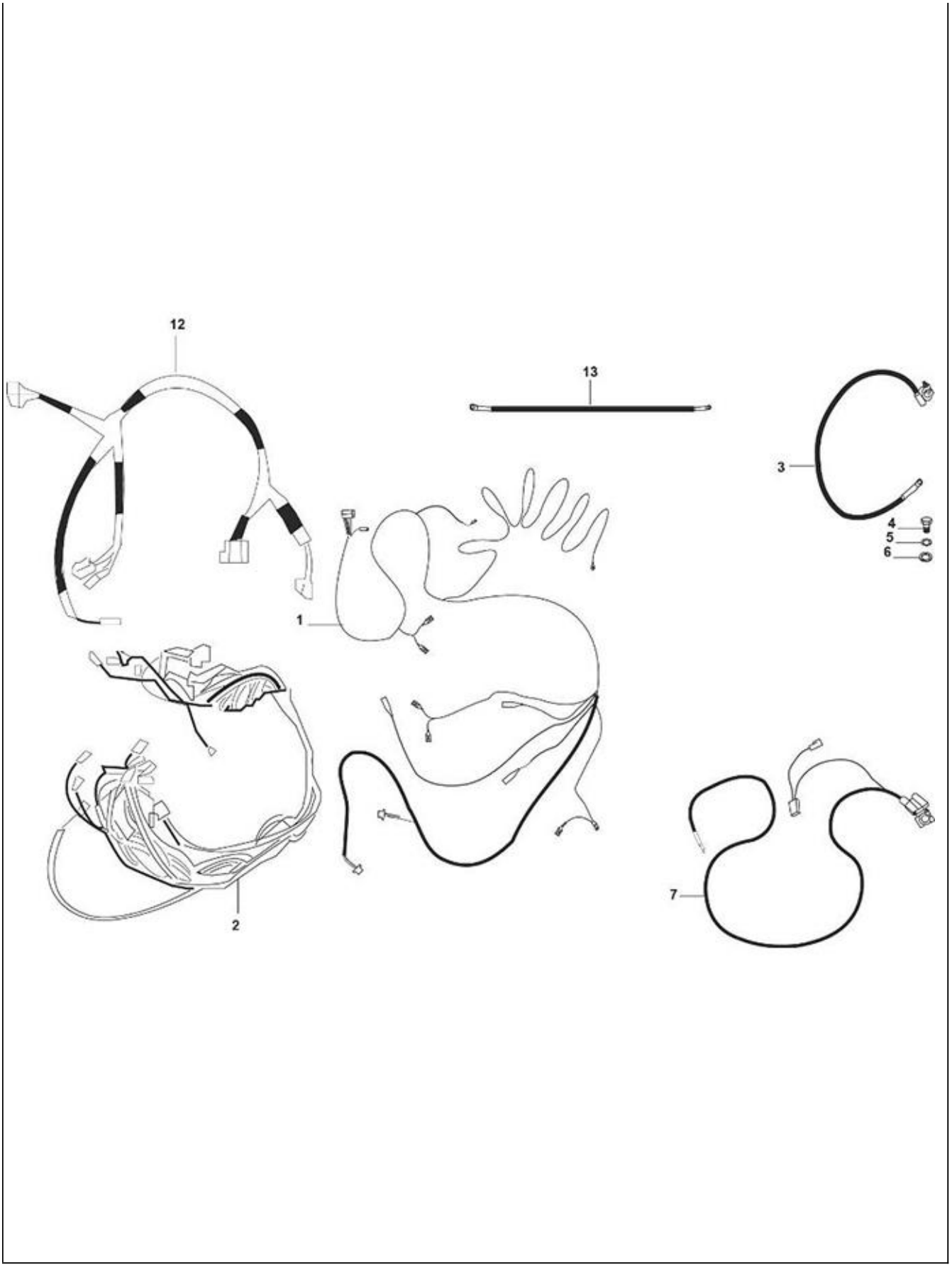
12
13
3
4
5
6
1
2
7

87

Print Date: 07-Apr-2022

PLATE-31

Wiring Harness

Fig. No.	Part No.	Description	Qty	Remarks
1	B077685	MAIN_WHS _CITY DLX _PETROL (NEUTRAL SW)	1	PTL
1	B077691	MAIN_WHS_CITY DLX_LPG (NEUTRAL SW)	1	LPG
2	B077754	W/HS INST. PANEL_CITY PETROL(NEUTRAL)	1	PTL
2	B077755	W/HS INST.PANEL_CITY GAS(NEUTRAL)	1	LPG
3	B042063	BATTERY CABLE NEGATIVE	1	
4	31088	HEX HD SCREW M6 X 16 CL 8.8 (811061623)	1	
5	3056	PLAIN WASHER M6 OD12	1	
6	016406	SPRING WASHER	1	
7	B078213	BATTERY +VE CABLE-CUT STARTER MOTOR (LPG/CNG)	1	
7	B078212	BATTERY CABLE +VE-BATT. TO 4ST (CITY)	1	
8	B003110R	PIG TAIL FUEL TANK	1	PTL
9	B075178R	PIG TAIL CABIN LAMP (PASS UPGRADE)	1	
10	B075327	GAS KIT W/ HS- LPG- (RH SHIFT) (FOR SNORKEL VEH.)	1	LPG
11	B078003	GAS KIT W/ HS- LPG- PAX 200- (RH SHIFT)	1	LPG
12	B075443	WHS ENGINE (CITY 200) UPGRADE	1	
13	1D001894	GROUND WIRE	1	
14	B075108	ADAPTOR PIGTAIL -ACCESSORIES(3WH)	1	

88

Print Date: 07-Apr-2022

PLATE-32

Front Brake Assembly

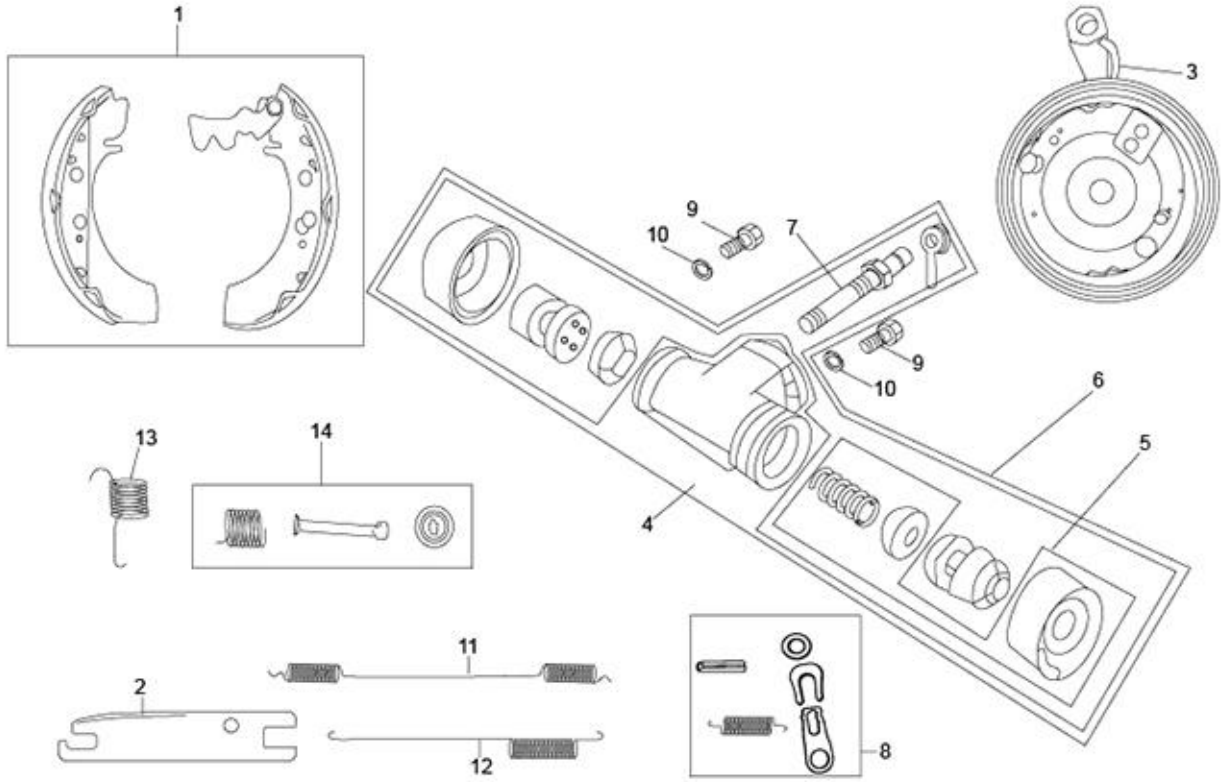
1
3
9
10
7
9
10
6
5
13
14
4
11
2
12
8

89

Print Date: 07-Apr-2022

PLATE-32

Front Brake Assembly

Fig. No.	Part No.	Description	Qty	Remarks
1	KIT95033	FRONT BRAKE LINERS KIT	1	
2	B003008	STRUT FRONT	1	
3	B024113	FRONT BRAKE ASSY.	1	
4	B003017	WHEEL CYLINDER ASSY.	1	
5	B003325	MINOR KIT WHEEL CYLINDER	1	
6	B003324	MAJOR KIT WHEEL CYLINDER	1	
7	B003300	BLEEDER SCREW	1	
8	B006509	CLIP & PIN KIT	1	
9	63440	BOLT M6X12	2	
10	12536	SPRING WASHER	2	
11	B003004	SHOE RETURN SPRING (UPPER)	1	
12	B003003	SHOE RETURN SPRING (LOWER)	1	
13	B003002	STRUT SPRING	1	
14	KIT95036	SHOE HOLD DOWN KIT	1	

90

Print Date: 07-Apr-2022

PLATE-33

Rear Brake Assembly

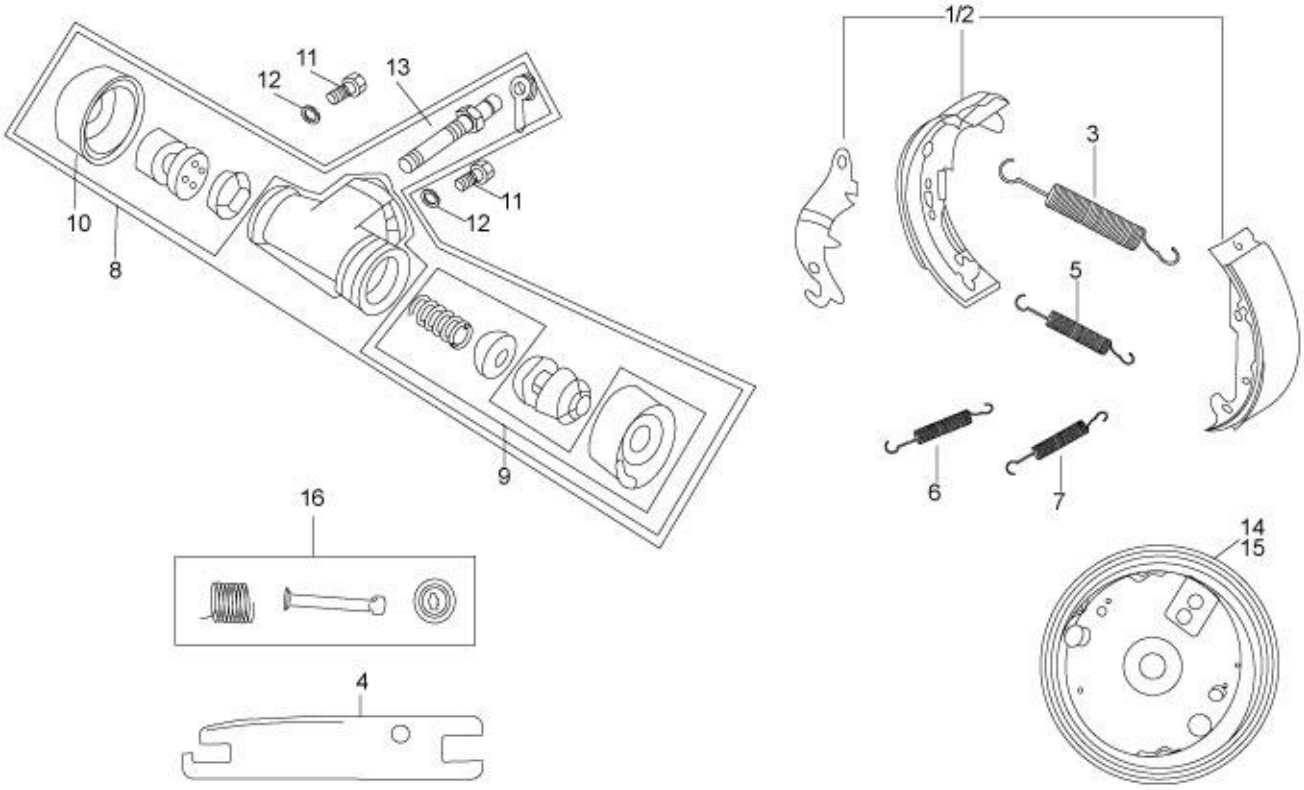
1/2
11
12
13
3
11
12
10
8
5
9
6
7
16
14
15
4

91

Print Date: 07-Apr-2022

PLATE-33

Rear Brake Assembly

Fig. No.	Part No.	Description	Qty	Remarks
1	B003330	REAR BRAKE SHOE KIT LH	1	
2	B003331	REAR BRAKE SHOE KIT RH (NI)	1	
3	B003004	SHOE RETURN SPRING (UPPER)	2	
4	B003012	STRUT REAR	2	
5	B003003	SHOE RETURN SPRING (LOWER)	2	
6	B003011	STRUT SPRING RH	1	
7	B003002	STRUT SPRING	1	
8	B003014	WHEEL CYLINDER ASSY. DIA.25.4 MM	1	
9	925574	MINOR KIT WHL CYL. RR	1	
10	B003328	MAJOR KIT WHEEL CYLINDER	1	
11	B002486	BOLT M8 X 35 6G CL 12.9	4	
12	12536	SPRING WASHER	4	
13	B003300	BLEEDER SCREW	2	
14	B001228	BRAKE PLATE ASSY. RH	1	
15	B001225	BRAKE PLATE ASSY. LH (N.I.)	1	
16	B003327	SHOE HOLD DOWN KIT	1	

92

Print Date: 07-Apr-2022

PLATE-34

Cables

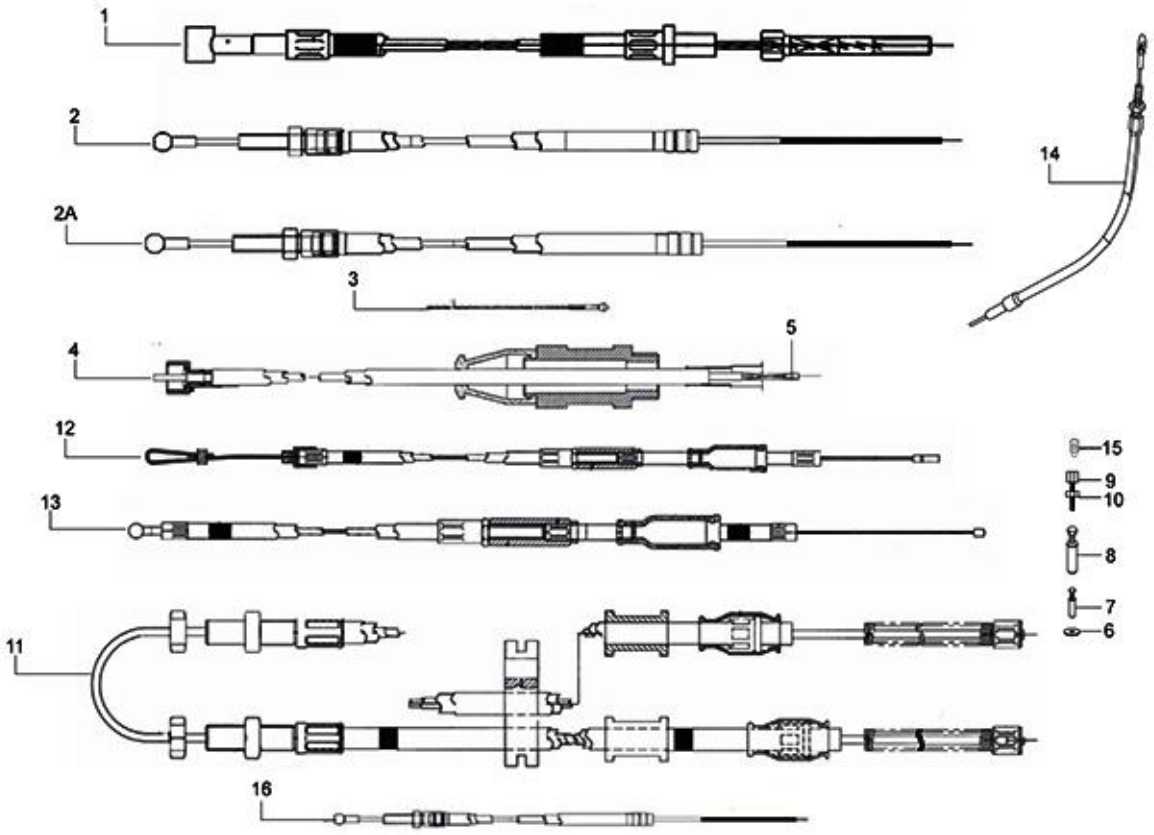
1
2
2A
3
4
5
12
13
11
16
14
15
9
10
8
7
6

93

Print Date: 07-Apr-2022

PLATE-34
Cables

Fig. No.	Part No.	Description	Qty	Remarks
1	B075566	CLUTCH CONTROL TRANSMISSION ASSLY.	1	
2	B073469	CABLE,GEAR CONTROL ASSLY NO.2	1	
2A	B075716	CABLE,GEAR CONTROL ASSLY -WHITE	1	
3	6A000068	INNER GEAR CONTROL CABLE (BLACK/WHITE)	2	
4	B076208	SPEEDO CABLE	1	
5	6A001834	FLEXIBLE TRANSMISSION CABLE WITH WASHER	1	Speedo Inner for B076208
7	B076078	SCREW TERMINAL ASSLY(REVERSE CABLE)	1	
8	B076364	SCREW TERMINAL ASSY. - GEAR CONTROL	2	
9	197071	ADJUSTER SCREW M6	2	
10	20106	HEX NUT M6	2	
11	B041774	PARKING BRAKE CABLE ASSY	1	
12	B075565	CABLE ASSLY CHOKE CONTROL	1	PTL
12	B042566	CHOKE CONTROL CABLE ASSY	1	LPG
13	B042356	ACCELERATOR CABLE WITH JONT (NEW)	1	
14	B076036	ASSLY REVERSE GEAR CONTROL CABLE	1	
14a	6A000070	REVERSE GEAR INNER CABLE	1	
15	1A008804	REVERSE CABLE REACTION BRACKET	1	
16	B076036	ASSLY REVERSE GEAR CONTROL CABLE	1	
17	B075960	COVER REVERSE GEAR CONTROL	1	NI

94

Print Date: 07-Apr-2022

PLATE-35
LPG Kit

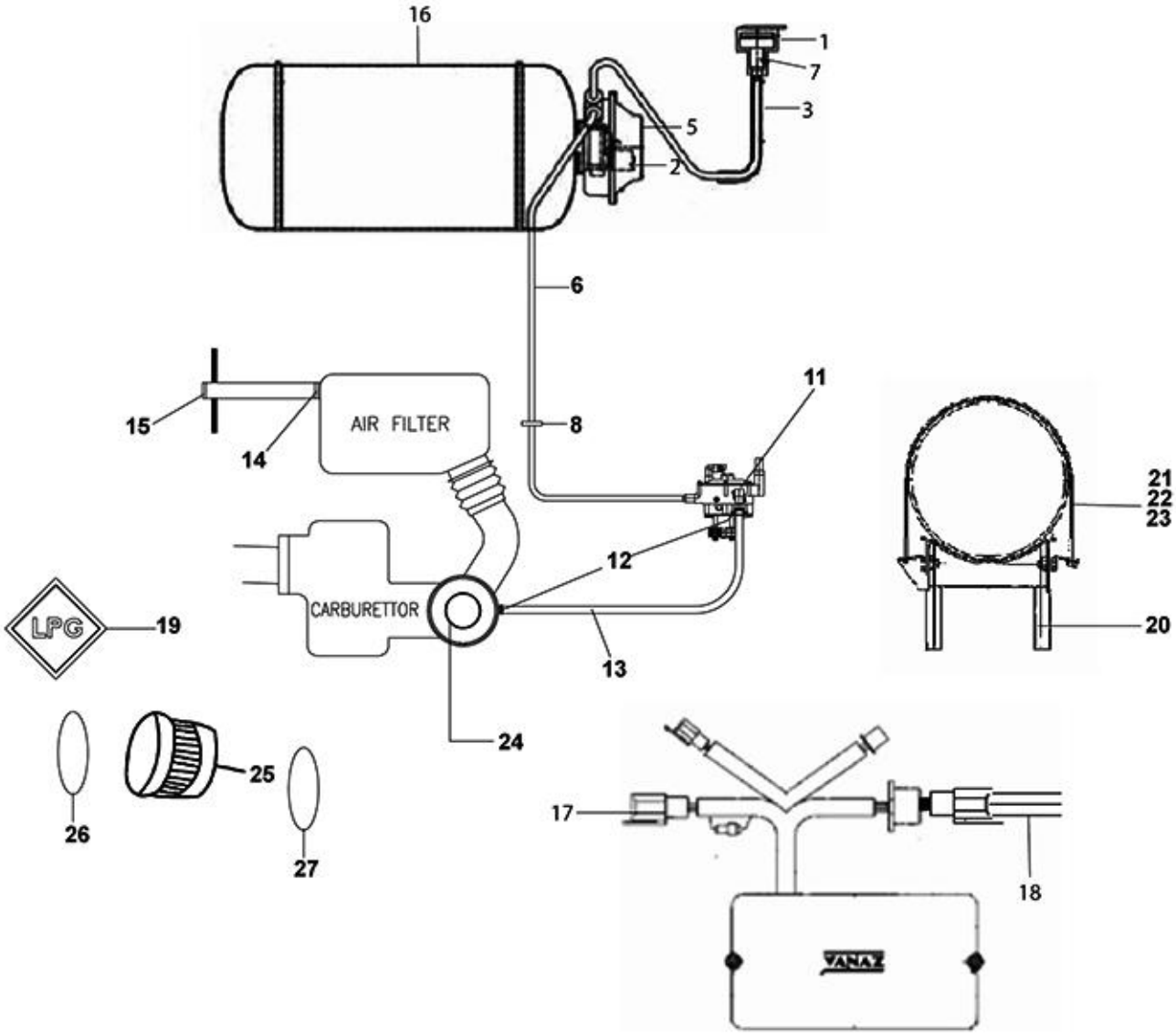
16
1
7
3
5
2
6
15
14
AIR FILTER
8
11
21
22
23
12
CARBURETTOR
LPG
19
20
13
24
25
26
27
17
18
VANAZ

95

Print Date: 07-Apr-2022

PLATE-35
LPG Kit

Fig. No.	Part No.	Description	Qty	Remarks
1	925743	FILLER CONNECTOR WITH CAP	1	
2	B075426	MULTIFUNCTION VALVE VANAZ	1	
3	B041491	VENT HOSE ASSY - 1	1	
4	B073085	LPG FLEX. HOSE ASSY. - FOR REFUELING	1	NI
5	B073084	SEAL BOX	6	
6	B077879	LPG FLEXIBLE HOSE ASSY (MFV TO FSV)	1	
7	929925	HOUSING ASSEMBLY FOR FILLER CONNECTOR	2	
8	B024147	CLIP	2	
9	940091	CONTENT GAUGE LPG (ZERO DEGREE)	1	NI
10	B076201	CYLINDER COVER - RH-COMMON CNG/LPG	1	NI
11	B024153	2 STAGE LPG REGULATOR	1	
12	B042199	CLIP	1	
13	B042750	HOSE REGULATOR TO CARBURETTOR	1	
14	B041090	RESTRACTOR FOR AIR FILTER-SNORKEL LPG	1	
15	940064	COIL ASSEMBLY-LPG(K-0440-03-I-170)	1	
16	B073024	LPG CYLINDER	1	Applicable FOR 18LT TANK
16	6A000124	LPG CYLINDER- 20.6 LTR	1	Applicable FOR 20.6Lt. TANK
17	B075861	ECU	1	
18	B075327	GAS KIT W/ HS- LPG- (RH SHIFT) (FOR SNORKEL VEH.)	1	
19	643882	STICKER(VANAZ PT NO K-0401-13)	1	
20	B075616	PIPE STRUCTURED CYLINDER MTG ASSLY-LPG	2	
21	B075622	RUBBER STRAP	2	Applicable FOR 18LT TANK
21	6A000216	STRAP CYLINDER MTG	2	Applicable FOR 20.6Lt. TANK
22	632184	RUBBER STRAP UPPER	2	
23	B079362	RUBBER PAD BOTTOM	2	Applicable FOR 20.6Lt. TANK
23	632185	LOWER STRAPS ASSY.	2	Applicable FOR 18LT TANK
24	B076437	MIXER ASSLY LPG	1	
25	925737	FILTER ELEMENT(K-0301-12-050)	1	
26	929949	O RING	1	
27	929948	O RING	1	
28	B076200	CYLINDER COVER - CENTRAL-COMMON CNG/LPG	1	NI,LPG

96

Print Date: 07-Apr-2022

PLATE-36

Two Stage LPG Regulator

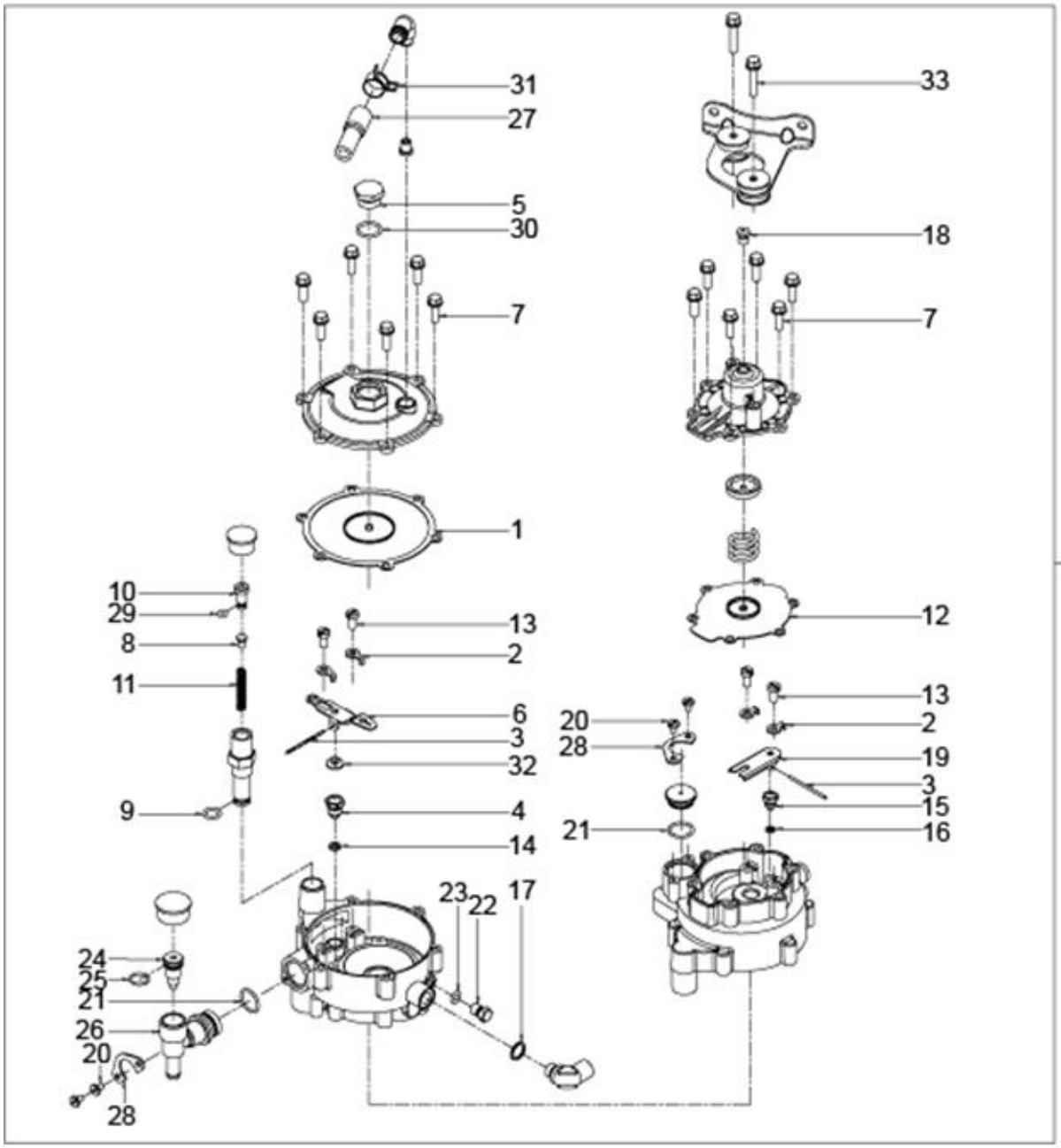
31
27
5
30
7
1
10
29
8
11
9
13
2
6
3
32
4
14
23
22
17
24
25
21
26
20
28
33
18
7
12
13
2
20
28
19
3
15
21
16
34

97

Print Date: 07-Apr-2022

PLATE-36

Two Stage LPG Regulator

Fig. No.	Part No.	Description	Qty	Remarks
1	932207	DIAPHRAGM SUB ASSY.	1	
2	932208	WASHER	4	
3	932210	LEVER PIN	1	
4	932263	SEAT	1	
5	932229	PLUG	1	
6	932209	LEVER SUB ASSY	1	
7	932232	FLANGE SCREW	12	
8	932212	SPRING GUIDE	1	
9	925781	O RING	1	
10	932226	IDLE SCREW	1	
11	932264	SPRING	1	
12	932215	DIAPHRAGM SUB ASSY.	1	
13	661909	CHEESE HEAD SCREW	4	
14	932214	WASHER	1	
15	932218	SEAT	1	
16	932219	WASHER	1	
17	920008	WASHER	1	
18	932230	BREATHER-I	1	
19	932217	LEVER SUB ASSY.	1	
20	932220	CHEESE HEAD SCREW	1	
21	932221	O RING	1	
22	932222	PLUG	1	
23	925783	O RING	1	
24	932225	FLOW ADJUSTING SCREW	1	
25	932242	ORING	1	
26	932224	FLOW CONTROL BODY	1	
27	932227	BREATHER HOSE	1	
28	932228	CLAMP	2	
29	932240	O RING	1	
30	932231	O RING	1	
31	932270	CLIP	1	
32	925768	PAD	1	
33	932255	FLANGE SCREW	1	
34	B076438	2 STAGE LPG REGULATOR	1	

98

Print Date: 07-Apr-2022

PLATE-37

Tools And Accessories

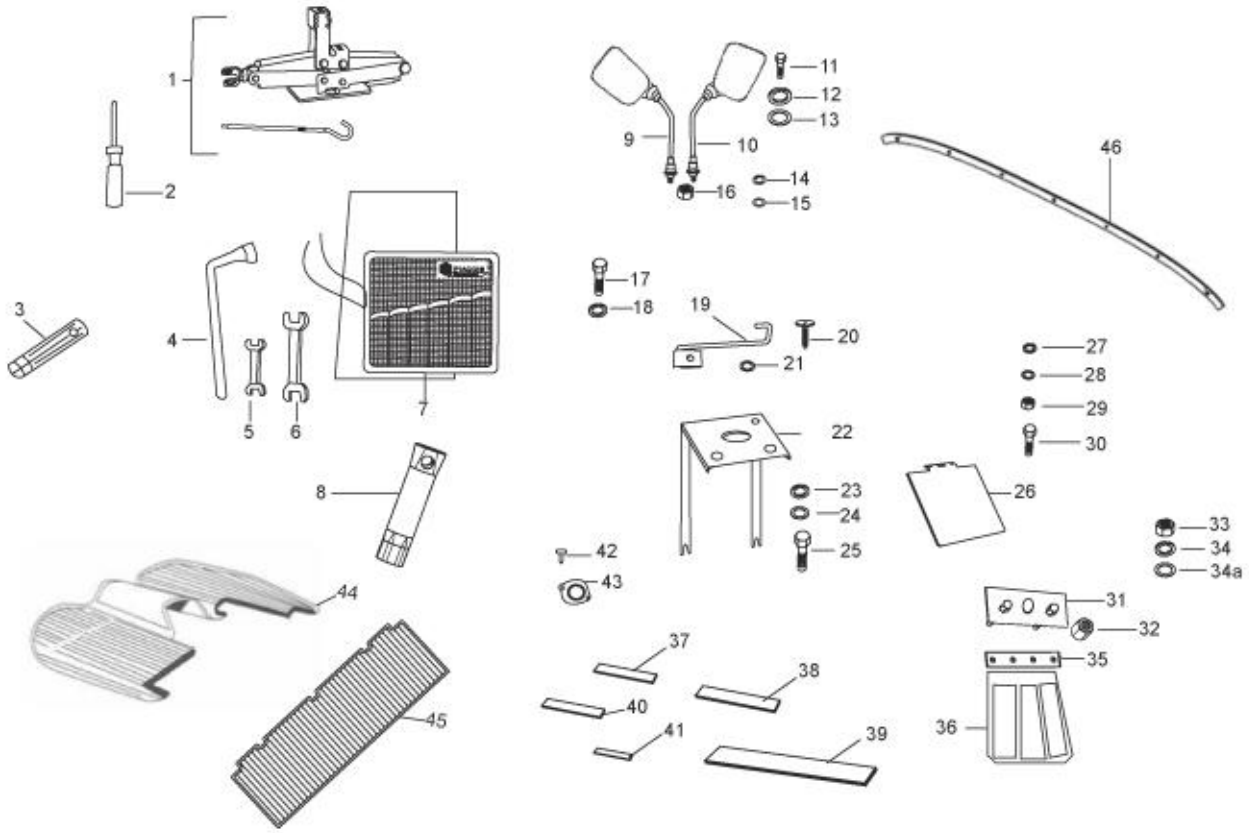
1
2
3
4
5
6
7
8
9
10
11
12
13
14
15
16
17
18
19
20
21
22
23
24
25
26
27
28
29
30
31
32
33
34
34a
35
36
37
38
39
40
41
42
43
44
45
46

99

Print Date: 07-Apr-2022

PLATE-37

Tools And Accessories

Fig. No.	Part No.	Description	Qty	Remarks
1	B076650R	JACK ASSLY	1	
2	567458	SCREW DRIVER (-)&(+) 80	1	
3	B041787	SPARK PLUG SPANNER	1	
4	B076142	L TYPE SPANNER - A/F 16	1	
5	567454	DOUBLE END SPANNER7/8	1	
6	567456	DOUBLE END SPANNER 12/14	1	
7	B041876	TOOL BAG	1	
8	B041787	SPARK PLUG SPANNER	1	
9	B073665	REAR VIEW MIRROR LH	1	
10	B073666	REAR VIEW MIRROR RH	1	
11	31118	SCREW M8X20	2	
12	016408	SPRING WASHER	6	
13	3058	PLAIN WASHER 15X8.4X1.5	20	
14	016408	SPRING WASHER	4	
15	3058	PLAIN WASHER 15X8.4X1.5	4	
16	20108	HEX NUT M8	4	
17	31116	HEX HD. SCREW M8X16	1	
18	016408	SPRING WASHER	1	
19	B001887	STOPPER ASSLY.	2	
20	15911	PAN SELF TAP SCREW 8SG X 16 AB	2	
21	16670	PLAIN WASHER 12X4.5X1	1	
22	B002334	FARE METER MTG. BKT.	1	NOT APPLICABLE FOR THIS MODEL
23	016408	SPRING WASHER	4	NOT APPLICABLE FOR THIS MODEL
24	3058	PLAIN WASHER 15X8.4X1.5	4	NOT APPLICABLE FOR THIS MODEL
25	31118	SCREW M8X20	4	NOT APPLICABLE FOR THIS MODEL
26	643661	LICENSE PLATE MTG. BKT.	4	
27	13861	PLAIN WASHER 20X8.2X2.5	1	
28	12540	SPRING WASHER M8	2	
29	20108	HEX NUT M8	2	
30	30072	HEX HEAD BOLT M8 X 35	2	
31	B002208	STRAP WITH PIN SPARE WHEEL MTG.	1	
32	20108	HEX NUT M8	2	
33	20106	HEX NUT M6	12	
34	016406	SPRING WASHER	12	
34a	013880	PLAIN WASHER	12	

100

Print Date: 07-Apr-2022

PLATE-37

Tools And Accessories

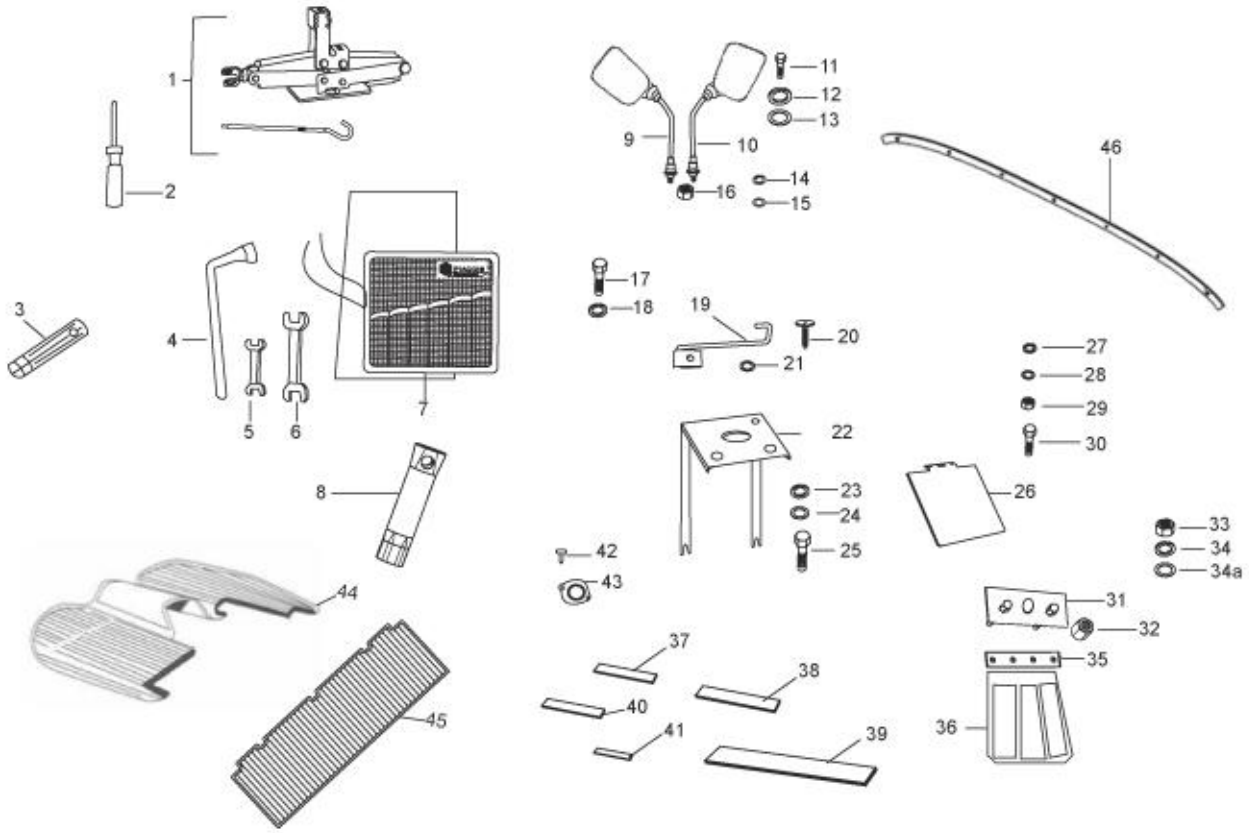
1
2
3
4
5
6
7
8
9
10
11
12
13
14
15
16
17
18
19
20
21
22
23
24
25
26
27
28
29
30
31
32
33
34
34a
35
36
37
38
39
40
41
42
43
44
45
46

101

Print Date: 07-Apr-2022

PLATE-37

Tools And Accessories

Fig. No.	Part No.	Description	Qty	Remarks
35	B001788	CLAMP MUDFLAP REAR	2	
36	B001789	MUDFLAP MUDGAURD REAR	2	
37	B024474	BEADDING LINING	2	
38	B024474	BEADDING LINING	1	
39	B006792	BEADING (INSULATION ENG. COMP. COVER)	2	
40	B074637	BEEDING DOME SIDE PILLAR (PET/DLS)	2	
41	B074657	BEEDING DOME SIDE PILLAR (LPG/CNG)	2	
42	8451	PAN SELF TP SCREW 6 SGX13 AB	4	
43	B003076	COVER SHOCKER MTG. HOLE	2	
44	B074060	FRONT CARPET (PETROL)	1	
44	B076410	CARPET CABIN FRONT - LPG	1	
45	B075986	CARPET PASSENGER FOOT REST	1	
46	B073603	UPPER STRIP CANPOY MTG	1	
47	B078316	LATERAL PROFILE	2	NI

102

Print Date: 07-Apr-2022

PLATE-38
TOOL KIT

1	9	17	25
2	10	18	26
3	11	19	27
4	12	20	28
5	13	21	29
6	14	22	30
7	15	23	31
8	16	24	

103

Print Date: 07-Apr-2022

PLATE-38
TOOL KIT

Fig. No.	Part No.	Description	Qty	Remarks
1	441025	CLUSTER GEAR NR BEARING PRESS.	1	
2	441026	CLUSTER GEAR NR BEARING REMOVAL	1	
3	441027	MAIN SHAFT NR BEARING PRESSING.	1	
4	441028	OIL SEAL ON MAIN SHAFT BALL BRG PRESSING.	1	
5	441029	TAPPET SETTING TOOL.	1	
6	441030	OIL PUMP DRIVING GEAR HOLDING TOOL.	1	
7	441031	PISTON TDC LOCATION.	1	
8	441032	HEX NUT ON CRANKSHAFT HOLDING TOOL.	1	
9	441033	OIL FILTER REMOVING & FITTING TOOL.	1	
10	441034	SELETION OF BP KIT GASKET.	1	
11	441035	RING FITMENT ON PISTION.	1	
12	441036	PISTON ASSLY HOLDING TOOL.	1	
13	441037	BP KIT COMPRESSION (PISTON RING). TOOL.	1	
14	441038	PINON SHAFT BALL BEARING PRESSING TOOL.	1	
15	441041	SPARK PLUG REMOVAL TOOL.	1	
16	441042	MAGNETO ROTOR HOLDING TOOL.	1	
17	441043	CRANK SHAFT HOLDING TOOL.	1	
18	441044	PINION SHAFT FITTING TOOL.	1	
19	441045	STEERING COLUMN LOCKNUT TIGHTING TOOL.	1	
20	441046	VALVE SPRING COMPRESSOR TOOL.	1	
21	441047	MAGNETO ROTOR PULLER.	1	
22	925704	IDLER GEAR BUSH PRESSING TOOL. (1T).	1	
23	925406	IDLER GEAR BUSH REMOVAL TOOL. (1T).	1	
24	926009	DIFFERENTAIL CAGE BALL BRG PRESSING (1T).	1	
25	920209	CLUTCH ASSLY HOLDING TOOL (1T).	1	
26	920401	DIFFERENTIAL GEAR ASSLY REMOVAL (1T).	1	
27	SST96030	STATOR SUPPORT PLATE OIL SEAL PRESSING DOLLEY	1	
28	SST96031	CLUSTER SHAFT OIL SEAL PREESING DOLLEY	1	
29	SST96032	PRIMARY GEAR HOLDING TOOLS	1	
30	SST96033	SPEEDO WORM GEAR REMOVAL TOOLS	1	
31	SST96034	CLUCTH HOLDING TOOLS STEP 2 BSIV	1	

104

Print Date: 07-Apr-2022

PLATE-7.1

Carburetor Child Parts

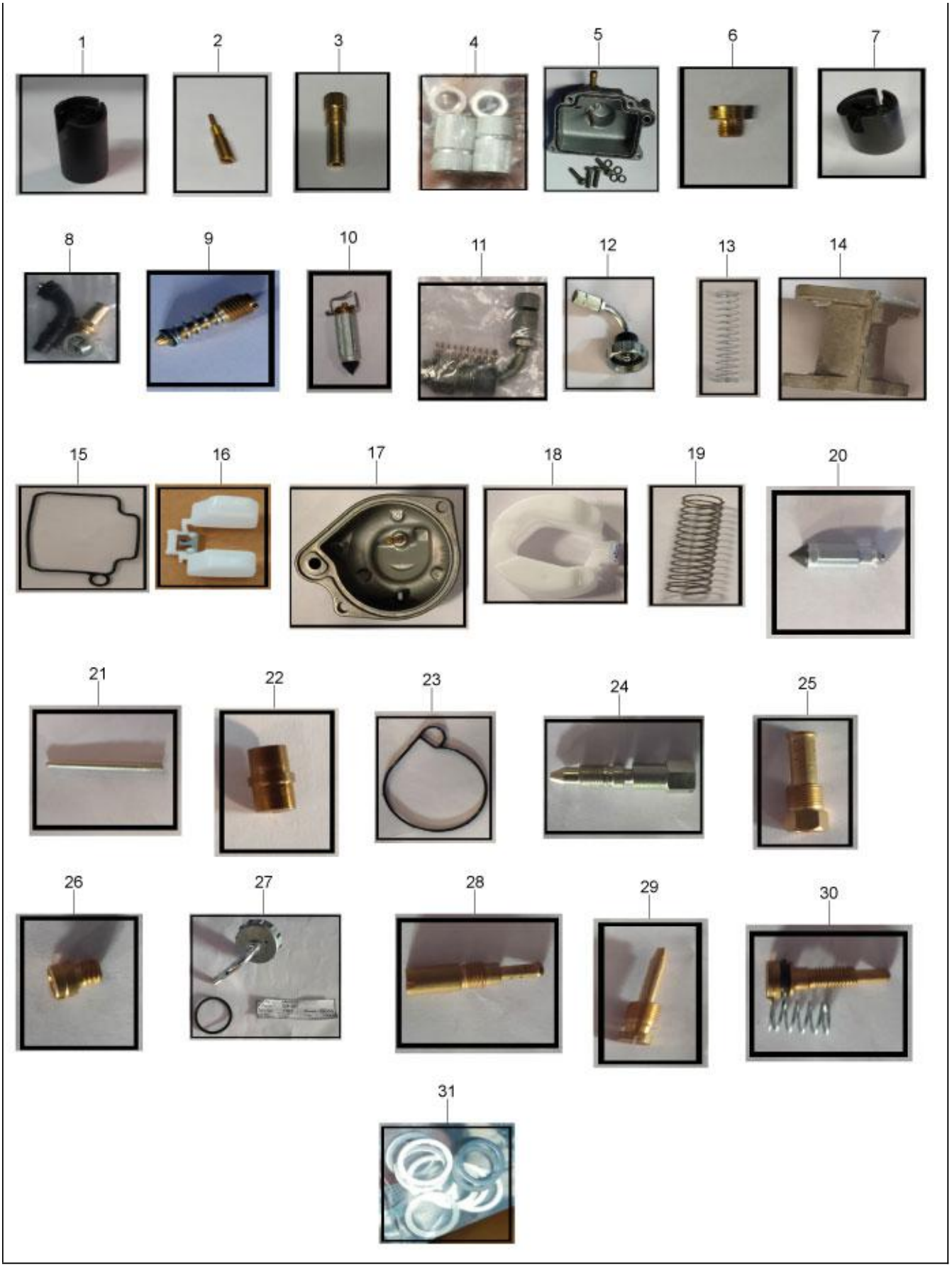
1
2
3
4
5
6
7
8
9
10
11
12
13
14
15
16
17
18
19
20
21
22
23
24
25
26
27
28
29
30
31

105

Print Date: 07-Apr-2022

PLATE-7.1

Carburetor Child Parts

Fig. No.	Part No.	Description	Qty	Remarks
1	B016827	THROTTLE VALVE	1	LPG
2	CM167802	PILOT JET (CNG/LPG)	1	LPG
3	CM167902	DIFFUSER	1	LPG
4	B016869	CABLE ADJUSTER KIT	2	LPG,UCAL Make carburetor
5	B016822	FLOAT CHAMBER BODY ASSY KIT	1	LPG,UCAL Make carburetor
6	CM167708	MAXIMUM JET	1	LPG
7	1A010097	THROTTLE VALVE	1	PTL
8	1A011914	KIT STARTER DEVICE	1	PTL
9	B016828	IDLE ADJUSTER KIT	1	LPG, UCAL Make carburetor
10	B017542	NEEDLE VALVE	1	LPG
11	1A000542	STARTER KIT	1	LPG, UCAL Make carburetor
12	B016825	GAS VALVE COVER KIT	1	LPG, UCAL Make carburetor
13	B016829	SPRING (PV)	1	LPG
14	1A007409	INTAKE FITTING-LPG/CNG	1	LPG
15	B016834	FLOAT CHAMBER GASKET	1	LPG
16	B016823	FLOAT	1	LPG
17	1A010092	COMPLETE BODY FLOAT CHAMBER	1	PTL
18	1A010091	COMPLETE FLOAT	1	PTL
19	1A010100	PISTON SPRING	1	PTL
20	1A010090	VALVE COMPLETE FLOAT	1	PTL
21	1A010098	JET NEEDLE	1	PTL
22	1A010023	NEEDLE JET	1	PTL
23	1A010095	FLOAT CHAMBER GASKET	1	PTL
24	1A010096	SCREW DRAIN	1	PTL
25	1A010024	NEEDLE JET HOLDER	1	PTL
26	1A010088	MAXIMUM JET	1	PTL
27	1A010101	TOP COMPLETE-PTL	1	PTL
28	1A010089	MINIMUM JET	1	PTL
29	1A010025	PILOT SCREW	1	PTL
30	1A010102	STOP SCREW AND SPRING	1	PTL
31	1A010026	PLANE WASHER	1	PTL

106

Print Date: 07-Apr-2022

PLATE-35.1

LPG Kit for With filter solenoied valve

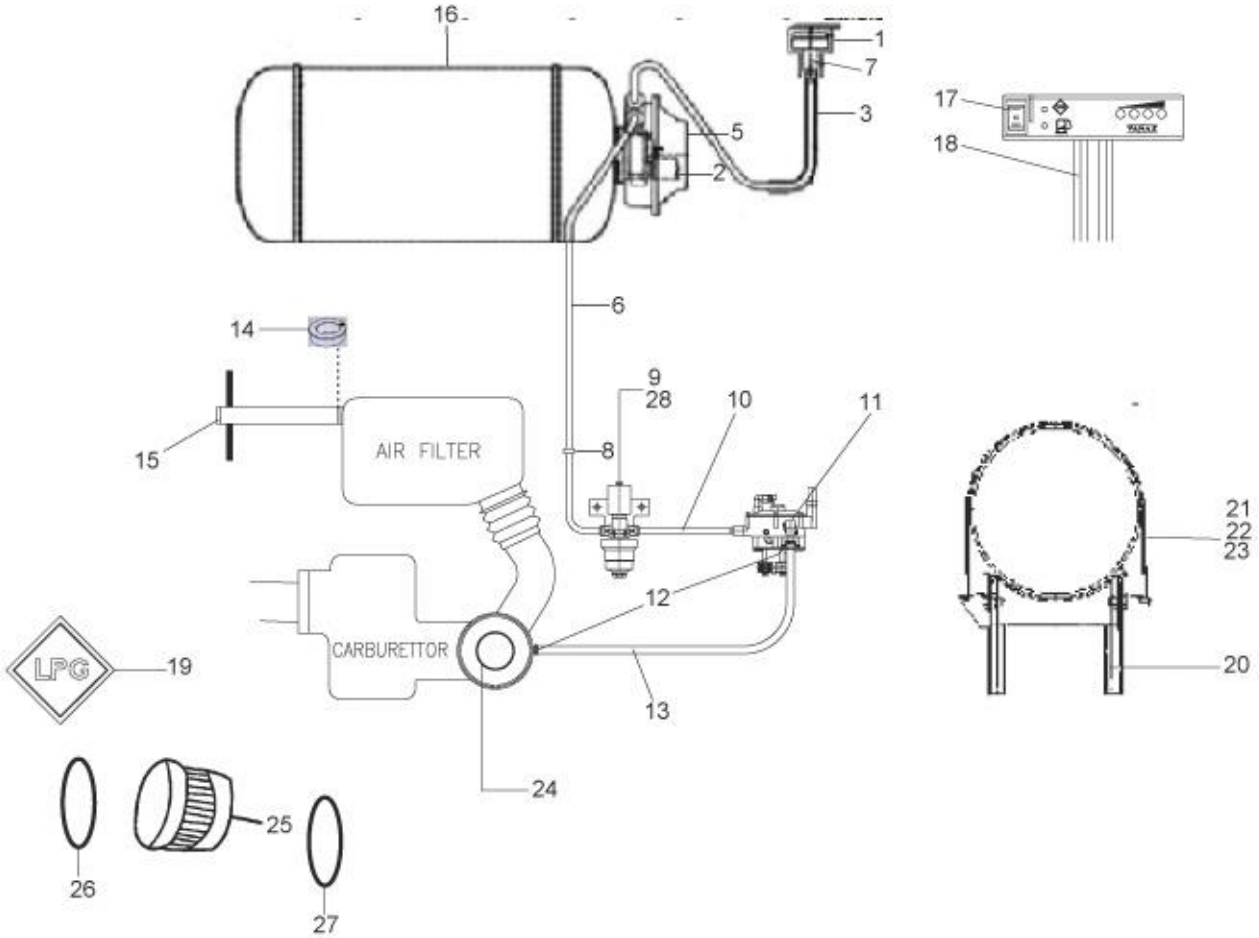
16
1
7
3
5
2
17
18
6
14
9
28
10
11
15
AIR FILTER
8
21
22
23
12
CARBURETTOR
LPG
19
13
20
24
25
26
27

107

Print Date: 07-Apr-2022

PLATE-35.1

LPG Kit for With filter solenoied valve

Fig. No.	Part No.	Description	Qty	Remarks
1	925743	FILLER CONNECTOR WITH CAP	1	
2	B075426	MULTIFUNCTION VALVE VANAZ	1	Applicable FOR 18LT TANK
2	6A000158	MULTI FUNCTION VALVE, 20.6LTR LPG CYL.	1	Applicable FOR 20.6Lt. TANK
3	B041491	VENT HOSE ASSY - 1	1	
3A	B073085	LPG FLEX. HOSE ASSY. - FOR REFUELING	1	
4	B073084	SEAL BOX	6	
5	B073084	SEAL BOX	1	
6	B074851	LPG FLEXIBLE HOSE ASSY (MFV TO FSV)	1	
7	929925	HOUSING ASSEMBLY FOR FILLER CONNECTOR	2	
8	932306	LPG FLEXIBLE HOSE ASSY -FROM FSV TO LPR	2	
9	B075636	FILTER SOLENOID VALVE (LPG)	1	
10	932306	LPG FLEXIBLE HOSE ASSY -FROM FSV TO LPR	1	
11	B076438	2 STAGE LPG REGULATOR	1	Applicable FOR 18LT TANK
11	6A000810	2 STAGE LPG REGULATOR	1	Applicable FOR 20.6Lt. TANK
12	B042199	CLIP	1	
13	B042750	HOSE REGULATOR TO CARBURETTOR	1	
14	B041090	RESTRACTOR FOR AIR FILTER-SNORKEL LPG	1	
15	940064	COIL ASSEMBLY-LPG(K-0440-03-I-170)	1	
16	6A000124	LPG CYLINDER- 20.6 LTR	1	Applicable FOR 20.6Lt. TANK
16	B073024	LPG CYLINDER	1	Applicable FOR 18LT TANK
17	B075861	ECU	1	
18	B075327	GAS KIT W/ HS- LPG- (RH SHIFT) (FOR SNORKEL VEH.)	1	
19	643882	STICKER(VANAZ PT NO K-0401-13)	1	
20	B041782	ASSY CENTRAL BRACKET	2	
21	B075622	RUBBER STRAP	2	
22	632184	RUBBER STRAP UPPER	2	
23	632185	LOWER STRAPS ASSY.	2	
24	B024164	MIXER ASSEMBLY-LPG	1	Applicable FOR 20.6Lt. TANK
24	B076437	MIXER ASSLY LPG	1	Applicable FOR 18LT TANK
25	925737	FILTER ELEMENT(K-0301-12-050)	1	
26	929949	O RING	1	
27	929948	O RING	1	
28	920012	SOLENOID SWITCH (MFV)	1	
29	940091	CONTENT GAUGE LPG (ZERO DEGREE)	1	NI

108

Print Date: 07-Apr-2022

PARTS INDEX

ape City DLX P-L BS-III Step-II LAM HS

109

Print Date: 07-Apr-2022

PART NO	BLOCK	PART NO	BLOCK	PART NO	BLOCK
---	PLATE-3	016408	PLATE-27	127013013	PLATE-2
000267	PLATE-12	016408	PLATE-30	127016015	PLATE-9
002139	PLATE-17	018639	PLATE-7	127111011	PLATE-6
003054	PLATE-20	018639	PLATE-9	127185012	PLATE-2
003054	PLATE-22	018639	PLATE-13	127460010	PLATE-2
003054	PLATE-28	107718	PLATE-25	12790	PLATE-24
009101	PLATE-10	107827	PLATE-24	12790	PLATE-30
009101	PLATE-17	107871	PLATE-25	128633	PLATE-24
013880	PLATE-37	108785	PLATE-27	132129	PLATE-5
013880	PLATE-9	108873	PLATE-25	132134	PLATE-5
013880	PLATE-19	108874	PLATE-25	132244	PLATE-5
013880	PLATE-27	109064	PLATE-25	136434	PLATE-25
013880	PLATE-29	109066	PLATE-25	136916	PLATE-27
013880	PLATE-30	109117	PLATE-25	137235	PLATE-25
013880	PLATE-30	109227	PLATE-26	138237	PLATE-27
016195	PLATE-11	109265	PLATE-25	13861	PLATE-37
016406	PLATE-37	109404	PLATE-26	13861	PLATE-22
016406	PLATE-11	109635	PLATE-26	13861	PLATE-22
016406	PLATE-18	109775	PLATE-26	150579	PLATE-25
016406	PLATE-20	109892	PLATE-24	15335	PLATE-18
016406	PLATE-26	111353	PLATE-9	15478	PLATE-18
016406	PLATE-27	111356	PLATE-6	15594	PLATE-24
016406	PLATE-28	111498	PLATE-6	157103	PLATE-24
016406	PLATE-28	112867R	PLATE-6	157103	PLATE-24
016406	PLATE-28	112898	PLATE-9	157716	PLATE-29
016406	PLATE-29	113278	PLATE-6	15900	PLATE-29
016406	PLATE-6	116831	PLATE-30	15911	PLATE-37
016406	PLATE-30	117401	PLATE-9	15996	PLATE-28
016406	PLATE-30	117402	PLATE-9	16319	PLATE-26
016406	PLATE-31	119735	PLATE-29	16405	PLATE-19
016408	PLATE-37	120164019	PLATE-2	16405	PLATE-19
016408	PLATE-37	120170018	PLATE-2	16405	PLATE-21
016408	PLATE-37	12136	PLATE-28	16405	PLATE-28
016408	PLATE-37	12138	PLATE-26	16405	PLATE-30
016408	PLATE-11	122032014	PLATE-17	16410	PLATE-18
016408	PLATE-18	125181	PLATE-26	16410	PLATE-18
016408	PLATE-18	125289	PLATE-25	16410	PLATE-24
016408	PLATE-18	12536	PLATE-33	16410	PLATE-24
016408	PLATE-21	12536	PLATE-32	16410	PLATE-25
016408	PLATE-22	12540	PLATE-37	16410	PLATE-25
016408	PLATE-22	12546	PLATE-28	16410	PLATE-26
016408	PLATE-24	126902	PLATE-26	16410	PLATE-6
016408	PLATE-27	127012019	PLATE-2	165121014	PLATE-9

110

Print Date: 07-Apr-2022

PART NO	BLOCK	PART NO	BLOCK	PART NO	BLOCK
16620	PLATE-26	1A006899	PLATE-14	1A009593	PLATE-16
16626	PLATE-26	1A006901	PLATE-14	1A009621R	PLATE-15
16670	PLATE-37	1A006970	PLATE-17	1A009632	PLATE-7
16670	PLATE-21	1A006988	PLATE-12	1A009706	PLATE-11
16670	PLATE-30	1A007026	PLATE-9	1A009762	PLATE-4
178610	PLATE-18	1A007028	PLATE-9	1A009779	PLATE-6
180431	PLATE-25	1A007029	PLATE-17	1A010001	PLATE-13
18630	PLATE-21	1A007047	PLATE-9	1A010016	PLATE-10
197071	PLATE-34	1A007047	PLATE-4	1A010023	PLATE-7
1A000024	PLATE-13	1A007051	PLATE-6	1A010023	PLATE-7.1
1A000402	PLATE-16	1A007152	PLATE-8	1A010024	PLATE-7
1A000542	PLATE-7.1	1A007152	PLATE-8	1A010024	PLATE-7.1
1A000542	PLATE-7	1A007153	PLATE-8	1A010025	PLATE-7
1A000612	PLATE-9	1A007409	PLATE-7	1A010025	PLATE-7.1
1A000708	PLATE-9	1A007409	PLATE-7.1	1A010026	PLATE-7
1A000708	PLATE-2	1A007409	PLATE-7	1A010026	PLATE-7.1
1A000742	PLATE-16	1A007489	PLATE-8	1A010035	PLATE-10
1A000831	PLATE-13	1A007492	PLATE-8	1A010088	PLATE-7
1A001073	PLATE-12	1A007501	PLATE-6	1A010088	PLATE-7.1
1A001794	PLATE-9	1A007565	PLATE-14	1A010089	PLATE-7
1A001795	PLATE-9	1A007605	PLATE-6	1A010089	PLATE-7.1
1A002358	PLATE-14	1A007634	PLATE-8	1A010090	PLATE-7
1A002661	PLATE-16	1A007663R	PLATE-9	1A010090	PLATE-7.1
1A002685	PLATE-9	1A007664R	PLATE-9	1A010091	PLATE-7.1
1A002691	PLATE-11	1A007774	PLATE-9	1A010091	PLATE-7
1A002691	PLATE-13	1A008397	PLATE-14	1A010092	PLATE-7
1A005176	PLATE-6	1A008547	PLATE-6	1A010092	PLATE-7.1
1A005178	PLATE-10	1A008559	PLATE-9	1A010095	PLATE-7
1A006002	PLATE-12	1A008672	PLATE-12	1A010095	PLATE-7.1
1A006115	PLATE-17	1A008715	PLATE-16	1A010096	PLATE-7
1A006545	PLATE-11	1A008804	PLATE-34	1A010096	PLATE-7.1
1A006592	PLATE-8	1A008804	PLATE-6	1A010097	PLATE-7
1A006593	PLATE-8	1A008823	PLATE-9	1A010097	PLATE-7.1
1A006701	PLATE-10	1A009093	PLATE-6	1A010098	PLATE-7
1A006740	PLATE-13	1A009251	PLATE-28	1A010098	PLATE-7.1
1A006742	PLATE-13	1A009352	PLATE-28	1A010100	PLATE-7
1A006743	PLATE-13	1A009586	PLATE-16	1A010100	PLATE-7.1
1A006751	PLATE-16	1A009587	PLATE-16	1A010101	PLATE-7
1A006806	PLATE-6	1A009588	PLATE-16	1A010101	PLATE-7.1
1A006812	PLATE-4	1A009589	PLATE-16	1A010102	PLATE-7
1A006856	PLATE-9	1A009590	PLATE-16	1A010102	PLATE-7.1
1A006858	PLATE-16	1A009591	PLATE-16	1A010119	PLATE-3
1A006877	PLATE-4	1A009592	PLATE-16	1A010136	PLATE-2

111

Print Date: 07-Apr-2022

PART NO	BLOCK	PART NO	BLOCK	PART NO	BLOCK
1A010150	PLATE-12	1A013159	PLATE-12	20108	PLATE-18
1A010160	PLATE-17	1A014399	PLATE-16	20108	PLATE-18
1A010161	PLATE-17	1A015692	PLATE-14	20108	PLATE-18
1A010162	PLATE-17	1A016737	PLATE-4	20108	PLATE-22
1A010166	PLATE-17	1A016964	PLATE-6	20108	PLATE-22
1A010187	PLATE-10	1A017112	PLATE-17	20108	PLATE-22
1A010208	PLATE-3	1A018038	PLATE-16	20108	PLATE-27
1A010461	PLATE-3	1A018212	PLATE-16	20108	PLATE-27
1A010548	PLATE-2	1A020456	PLATE-16	20108	PLATE-30
1A010561	PLATE-3	1A021204	PLATE-16	20108	PLATE-30
1A010632	PLATE-6	1D000425R	PLATE-16	20108	PLATE-30
1A010696R	PLATE-16	1D000510	PLATE-28	20110	PLATE-18
1A010720	PLATE-9	1D000671R	PLATE-28	20110	PLATE-24
1A011044	PLATE-17	1D001138	PLATE-9	20110	PLATE-24
1A011246	PLATE-9	1D001418	PLATE-28	20110	PLATE-25
1A011289	PLATE-17	1D001846	PLATE-12	20110	PLATE-25
1A011461	PLATE-2	1D001846	PLATE-16	20110	PLATE-26
1A011500	PLATE-9	1D001847	PLATE-12	20359	PLATE-24
1A011914	PLATE-7	1D001894	PLATE-31	21118	PLATE-24
1A011914	PLATE-7.1	1E002770	PLATE-26	21216	PLATE-27
1A011940	PLATE-2	1E002771	PLATE-26	216369	PLATE-19
1A012011	PLATE-10	1E002772	PLATE-26	216369	PLATE-20
1A012039	PLATE-10	20104	PLATE-21	220575	PLATE-5
1A012150	PLATE-3	20104	PLATE-22	226596	PLATE-24
1A012151	PLATE-3	20104	PLATE-27	226661	PLATE-24
1A012152	PLATE-3	20105	PLATE-21	226662	PLATE-24
1A012153	PLATE-3	20105	PLATE-28	229524	PLATE-27
1A012154	PLATE-3	20105	PLATE-28	231370	PLATE-18
1A012155	PLATE-3	20105	PLATE-28	231370	PLATE-18
1A012156	PLATE-3	20106	PLATE-34	231370	PLATE-24
1A012157	PLATE-3	20106	PLATE-37	231370	PLATE-24
1A012158	PLATE-3	20106	PLATE-20	231370	PLATE-24
1A012159	PLATE-3	20106	PLATE-27	231370	PLATE-6
1A012160	PLATE-3	20106	PLATE-28	237246	PLATE-24
1A012161	PLATE-3	20106	PLATE-28	2383	PLATE-18
1A012181	PLATE-17	20106	PLATE-29	2383	PLATE-18
1A012182	PLATE-10	20106	PLATE-29	2383	PLATE-22
1A012182	PLATE-10	20106	PLATE-29	2383	PLATE-22
1A012334	PLATE-10	20106	PLATE-30	2383	PLATE-30
1A012845	PLATE-3	20106	PLATE-30	243303R	PLATE-24
1A012846	PLATE-17	20108	PLATE-37	265091	PLATE-18
1A012925	PLATE-11	20108	PLATE-37	267065	PLATE-18
1A013013	PLATE-14	20108	PLATE-37	267065	PLATE-24

112

Print Date: 07-Apr-2022

PART NO	BLOCK	PART NO	BLOCK	PART NO	BLOCK
267068	PLATE-24	3058	PLATE-30	441031	PLATE-38
269755	PLATE-9	3068	PLATE-24	441032	PLATE-38
269755	PLATE-11	31056	PLATE-19	441033	PLATE-38
272178	PLATE-18	31056	PLATE-19	441034	PLATE-38
285536	PLATE-4	31057	PLATE-28	441035	PLATE-38
286328	PLATE-18	31058	PLATE-28	441036	PLATE-38
286328	PLATE-18	31058	PLATE-28	441037	PLATE-38
286328	PLATE-18	31088	PLATE-27	441038	PLATE-38
286328	PLATE-24	31088	PLATE-28	441041	PLATE-38
288730	PLATE-5	31088	PLATE-28	441042	PLATE-38
30072	PLATE-37	31088	PLATE-28	441043	PLATE-38
30072	PLATE-30	31088	PLATE-30	441044	PLATE-38
30074	PLATE-11	31088	PLATE-30	441045	PLATE-38
30104	PLATE-26	31088	PLATE-30	441046	PLATE-38
30104	PLATE-26	31088	PLATE-31	441047	PLATE-38
30209R	PLATE-25	31089	PLATE-11	478261	PLATE-2
30242	PLATE-21	31089	PLATE-26	48197	PLATE-27
3055	PLATE-21	31089	PLATE-29	482335	PLATE-15
3055	PLATE-26	31092	PLATE-6	485655	PLATE-9
3055	PLATE-27	31116	PLATE-37	485703	PLATE-9
3055	PLATE-28	31116	PLATE-22	485703	PLATE-11
3055	PLATE-28	31116	PLATE-30	485868	PLATE-14
3055	PLATE-28	31118	PLATE-37	566545	PLATE-25
3055	PLATE-29	31118	PLATE-37	567454	PLATE-37
3055	PLATE-30	31118	PLATE-22	567456	PLATE-37
3056	PLATE-11	31118	PLATE-22	567458	PLATE-37
3056	PLATE-20	31119	PLATE-18	567461	PLATE-27
3056	PLATE-28	31119	PLATE-18	567473	PLATE-25
3056	PLATE-28	31119	PLATE-30	567498R	PLATE-28
3056	PLATE-29	31154	PLATE-18	567498R	PLATE-28
3056	PLATE-29	432142	PLATE-9	567581	PLATE-28
3056	PLATE-6	433122	PLATE-11	567593	PLATE-29
3056	PLATE-30	434541	PLATE-14	567690	PLATE-27
3056	PLATE-31	434541	PLATE-15	567700	PLATE-28
3058	PLATE-37	434716	PLATE-11	567706	PLATE-28
3058	PLATE-37	435571	PLATE-15	567878R	PLATE-19
3058	PLATE-37	436947	PLATE-11	567899	PLATE-27
3058	PLATE-22	441025	PLATE-38	567920	PLATE-27
3058	PLATE-22	441026	PLATE-38	567920	PLATE-27
3058	PLATE-22	441027	PLATE-38	567990	PLATE-25
3058	PLATE-27	441028	PLATE-38	567991	PLATE-25
3058	PLATE-30	441029	PLATE-38	567992	PLATE-25
3058	PLATE-30	441030	PLATE-38	567993	PLATE-25

113

Print Date: 07-Apr-2022

PART NO	BLOCK	PART NO	BLOCK	PART NO	BLOCK
568095	PLATE-25	632056	PLATE-27	661925	PLATE-20
568140	PLATE-18	632056	PLATE-30	6650	PLATE-24
568671	PLATE-23	632158	PLATE-26	6733	PLATE-25
568689	PLATE-18	632184	PLATE-35	680166	PLATE-28
568692	PLATE-21	632184	PLATE-35.1	6965	PLATE-28
568692	PLATE-28	632185	PLATE-35	6965	PLATE-28
568713	PLATE-21	632185	PLATE-35.1	6A000068	PLATE-34
568721	PLATE-28	632247	PLATE-18	6A000070	PLATE-34
568737	PLATE-27	632299	PLATE-18	6A000124	PLATE-35
569165	PLATE-28	632299	PLATE-18	6A000124	PLATE-35.1
569197	PLATE-28	632508	PLATE-22	6A000158	PLATE-35.1
569244	PLATE-18	63440	PLATE-32	6A000193	PLATE-26
569375	PLATE-18	639088	PLATE-28	6A000197	PLATE-26
587617	PLATE-24	640762	PLATE-28	6A000199	PLATE-8
587624R	PLATE-27	6410	PLATE-6	6A000200	PLATE-8
587671R	PLATE-28	6411	PLATE-27	6A000209	PLATE-26
587902	PLATE-26	642032	PLATE-28	6A000216	PLATE-35
5969	PLATE-27	642537	PLATE-9	6A000810	PLATE-35.1
604535	PLATE-24	643149	PLATE-9	6A001834	PLATE-34
604553	PLATE-8	643156	PLATE-9	6B000140	PLATE-28
604557	PLATE-28	643367	PLATE-11	6B000850	PLATE-22
604603	PLATE-30	643661	PLATE-37	6B001698BW	PLATE-22
604717	PLATE-27	643691	PLATE-23	6B001698CB	PLATE-22
604756	PLATE-22	643692	PLATE-27	6B001748	PLATE-22
604758	PLATE-25	643741	PLATE-24	6B002468R	PLATE-30
604758	PLATE-25	643772R	PLATE-25	6B002949	PLATE-30
604759	PLATE-25	643882	PLATE-35	6B002950	PLATE-30
604908	PLATE-19	643882	PLATE-35.1	6B002951	PLATE-30
604909	PLATE-19	644299	PLATE-19	6B002952	PLATE-30
604910	PLATE-27	644299	PLATE-20	6B002953	PLATE-30
604948	PLATE-18	644814R	PLATE-27	6B002954	PLATE-30
604953	PLATE-22	645037	PLATE-8	6C000016	PLATE-6
604954	PLATE-22	645037	PLATE-30	6C000041	PLATE-6
604954	PLATE-22	652001	PLATE-27	6C000118	PLATE-27
604972	PLATE-22	652562	PLATE-22	6C000190	PLATE-25
60565	PLATE-26	660168	PLATE-22	6C000191	PLATE-25
6066	PLATE-24	660168	PLATE-23	6C000312R	PLATE-6
6066	PLATE-25	660168	PLATE-29	6C000430	PLATE-24
6078	PLATE-23	661229	PLATE-27	6C000430	PLATE-25
6078	PLATE-28	661266	PLATE-24	6C000530	PLATE-24
6078	PLATE-28	661267	PLATE-24	6C000609	PLATE-25
616649	PLATE-22	661282	PLATE-24	6D000099	PLATE-22
6173	PLATE-27	661909	PLATE-36	6D000143R	PLATE-29

114

Print Date: 07-Apr-2022

PART NO	BLOCK	PART NO	BLOCK	PART NO	BLOCK
6D000144R	PLATE-29	87067	PLATE-25	932222	PLATE-36
6D000145R	PLATE-29	872816	PLATE-9	932224	PLATE-36
6D000146R	PLATE-29	8771	PLATE-25	932225	PLATE-36
6D000199	PLATE-28	878941	PLATE-9	932226	PLATE-36
6D000387	PLATE-28	884222808	PLATE-9	932227	PLATE-36
6D000388	PLATE-28	920008	PLATE-36	932228	PLATE-36
6D000420	PLATE-28	920012	PLATE-35.1	932229	PLATE-36
6D000421	PLATE-28	920088	PLATE-8	932230	PLATE-36
6D000423	PLATE-28	920209	PLATE-38	932231	PLATE-36
6D000424	PLATE-28	920401	PLATE-38	932232	PLATE-36
6D000425	PLATE-28	925406	PLATE-38	932240	PLATE-36
6D000426	PLATE-28	925574	PLATE-33	932242	PLATE-36
6D000427	PLATE-28	925581	PLATE-29	932255	PLATE-36
6D000428	PLATE-28	925584	PLATE-28	932263	PLATE-36
6D000429	PLATE-28	925704	PLATE-38	932264	PLATE-36
6D000432	PLATE-28	925737	PLATE-35	932270	PLATE-36
6D000435	PLATE-28	925737	PLATE-35.1	932306	PLATE-35.1
6D000437	PLATE-28	925743	PLATE-35	932306	PLATE-35.1
7066R	PLATE-9	925743	PLATE-35.1	940028	PLATE-5
71633	PLATE-28	925768	PLATE-36	940064	PLATE-35
74521	PLATE-25	925781	PLATE-36	940064	PLATE-35.1
75708	PLATE-25	925783	PLATE-36	940065	PLATE-25
78307	PLATE-29	925786	PLATE-28	940066	PLATE-25
808000826	PLATE-21	925888	PLATE-19	940067	PLATE-27
8080	PLATE-23	926009	PLATE-38	940068	PLATE-27
8080	PLATE-29	929925	PLATE-35	940069	PLATE-8
812061656	PLATE-24	929925	PLATE-35.1	940071	PLATE-8
812061656	PLATE-25	929948	PLATE-35	940072	PLATE-8
812061656	PLATE-27	929948	PLATE-35.1	940091	PLATE-35
82635R	PLATE-4	929949	PLATE-35	940091	PLATE-35.1
829661	PLATE-9	929949	PLATE-35.1	940125	PLATE-20
83040R	PLATE-14	932207	PLATE-36	940162	PLATE-29
83041R	PLATE-14	932208	PLATE-36	963486	PLATE-15
83054R	PLATE-11	932209	PLATE-36	B001225	PLATE-33
842001600	PLATE-2	932210	PLATE-36	B001228	PLATE-33
842001600	PLATE-2	932212	PLATE-36	B001301	PLATE-25
843000500	PLATE-6	932214	PLATE-36	B001315	PLATE-24
843000809	PLATE-2	932215	PLATE-36	B001315	PLATE-25
843307	PLATE-11	932217	PLATE-36	B001315	PLATE-30
8451	PLATE-37	932218	PLATE-36	B001316	PLATE-25
8451	PLATE-28	932219	PLATE-36	B001316	PLATE-30
847928	PLATE-14	932220	PLATE-36	B001317	PLATE-24
847928	PLATE-15	932221	PLATE-36	B001317	PLATE-30

115

Print Date: 07-Apr-2022

PART NO	BLOCK	PART NO	BLOCK	PART NO	BLOCK
B001319	PLATE-24	B006544	PLATE-22	B016829	PLATE-7
B001323	PLATE-25	B006792	PLATE-37	B016834	PLATE-7.1
B001386	PLATE-21	B006853	PLATE-26	B016834	PLATE-7
B001402	PLATE-30	B014063	PLATE-9	B016869	PLATE-7.1
B001423	PLATE-30	B014066	PLATE-9	B016869	PLATE-7
B001788	PLATE-37	B014555	PLATE-15	B016939	PLATE-15
B001789	PLATE-37	B014684	PLATE-11	B017113	PLATE-14
B001887	PLATE-37	B014705	PLATE-11	B017165	PLATE-14
B002208	PLATE-37	B014706	PLATE-11	B017165	PLATE-15
B002334	PLATE-37	B014732	PLATE-11	B017189	PLATE-16
B002486	PLATE-33	B014755	PLATE-9	B017230	PLATE-11
B002486	PLATE-24	B014760	PLATE-14	B017323	PLATE-14
B003002	PLATE-33	B015288	PLATE-11	B017336	PLATE-11
B003002	PLATE-32	B015312	PLATE-13	B017431	PLATE-14
B003003	PLATE-33	B015483	PLATE-14	B017438	PLATE-11
B003003	PLATE-32	B015543	PLATE-7	B017456	PLATE-11
B003004	PLATE-33	B015592	PLATE-9	B017542	PLATE-7.1
B003004	PLATE-32	B015598	PLATE-4	B017542	PLATE-7
B003008	PLATE-32	B015943	PLATE-4	B017746	PLATE-14
B003011	PLATE-33	B016016	PLATE-7	B018442	PLATE-7
B003012	PLATE-33	B016120	PLATE-16	B018464	PLATE-3
B003014	PLATE-33	B016144	PLATE-12	B018533	PLATE-11
B003017	PLATE-32	B016148	PLATE-16	B018718	PLATE-14
B003076	PLATE-37	B016192	PLATE-13	B018853	PLATE-16
B003110R	PLATE-31	B016368	PLATE-11	B018853	PLATE-2
B003115	PLATE-19	B016552	PLATE-9	B018854	PLATE-15
B003115	PLATE-20	B016611	PLATE-10	B018946	PLATE-14
B003228	PLATE-27	B016620	PLATE-13	B019047	PLATE-13
B003282	PLATE-19	B016774	PLATE-7	B019220	PLATE-2
B003282	PLATE-19	B016774	PLATE-14	B019420	PLATE-16
B003282	PLATE-20	B016774	PLATE-16	B019420	PLATE-3
B003286	PLATE-18	B016774	PLATE-5	B023727R	PLATE-28
B003300	PLATE-33	B016822	PLATE-7.1	B023727R	PLATE-28
B003300	PLATE-32	B016822	PLATE-7	B023727R	PLATE-28
B003324	PLATE-32	B016823	PLATE-7	B023786R	PLATE-27
B003325	PLATE-32	B016823	PLATE-7.1	B023940	PLATE-6
B003327	PLATE-33	B016825	PLATE-7.1	B023976	PLATE-23
B003328	PLATE-33	B016825	PLATE-7	B024113	PLATE-25
B003330	PLATE-33	B016827	PLATE-7.1	B024113	PLATE-32
B003331	PLATE-33	B016827	PLATE-7	B024147	PLATE-35
B003652	PLATE-30	B016828	PLATE-7.1	B024153	PLATE-35
B003978	PLATE-22	B016828	PLATE-7	B024164	PLATE-35.1
B006509	PLATE-32	B016829	PLATE-7.1	B024168	PLATE-19

116

Print Date: 07-Apr-2022

PART NO	BLOCK	PART NO	BLOCK	PART NO	BLOCK
B024169	PLATE-23	B042750	PLATE-35.1	B073848	PLATE-26
B024373	PLATE-24	B042794	PLATE-27	B073849	PLATE-26
B024374	PLATE-24	B042878	PLATE-24	B073850R	PLATE-26
B024474	PLATE-37	B042879	PLATE-24	B073852	PLATE-30
B024474	PLATE-37	B073024	PLATE-35	B073853	PLATE-30
B024474	PLATE-22	B073024	PLATE-35.1	B073872	PLATE-29
B024512	PLATE-30	B073084	PLATE-35	B073875	PLATE-29
B024516	PLATE-30	B073084	PLATE-35.1	B073875SL	PLATE-29
B024532	PLATE-28	B073084	PLATE-35.1	B073882BL	PLATE-29
B024614	PLATE-6	B073085	PLATE-35	B073882BW	PLATE-29
B041054	PLATE-30	B073085	PLATE-35.1	B073882CB	PLATE-29
B041090	PLATE-35	B073441	PLATE-8	B073882EG	PLATE-29
B041090	PLATE-35.1	B073469	PLATE-34	B073882GY	PLATE-29
B041181	PLATE-25	B073478R	PLATE-23	B073882NB	PLATE-29
B041392	PLATE-22	B073479R	PLATE-23	B073882WR	PLATE-29
B041397	PLATE-30	B073481R	PLATE-23	B073953	PLATE-29
B041398	PLATE-30	B073492	PLATE-28	B073969	PLATE-29
B041491	PLATE-35	B073492	PLATE-28	B073970	PLATE-29
B041491	PLATE-35.1	B073538	PLATE-27	B074024	PLATE-27
B041584	PLATE-30	B073598	PLATE-30	B074033	PLATE-29
B041774	PLATE-34	B073600	PLATE-28	B074040	PLATE-26
B041774	PLATE-27	B073601	PLATE-21	B074060	PLATE-37
B041782	PLATE-35.1	B073602ED	PLATE-21	B074063	PLATE-29
B041787	PLATE-37	B073603	PLATE-37	B074150	PLATE-22
B041787	PLATE-37	B073626	PLATE-21	B074262	PLATE-23
B041798	PLATE-20	B073665	PLATE-37	B074275	PLATE-23
B041852	PLATE-20	B073666	PLATE-37	B074433	PLATE-29
B041853	PLATE-19	B073667SP	PLATE-25	B074434	PLATE-29
B041853	PLATE-20	B073682	PLATE-28	B074491	PLATE-28
B041876	PLATE-37	B073685	PLATE-28	B074498	PLATE-26
B042063	PLATE-31	B073690	PLATE-25	B074539	PLATE-28
B042199	PLATE-35	B073715	PLATE-28	B074539	PLATE-29
B042199	PLATE-35.1	B073788	PLATE-27	B074588R	PLATE-24
B042317	PLATE-27	B073800	PLATE-27	B074588R	PLATE-30
B042356	PLATE-34	B073809	PLATE-23	B074590R	PLATE-24
B042378	PLATE-20	B073810	PLATE-23	B074590R	PLATE-30
B042390	PLATE-20	B073811	PLATE-23	B074593	PLATE-19
B042438	PLATE-24	B073812	PLATE-23	B074593	PLATE-20
B042438	PLATE-25	B073814	PLATE-23	B074594	PLATE-30
B042486	PLATE-9	B073815	PLATE-23	B074637	PLATE-37
B042566	PLATE-34	B073816	PLATE-23	B074637	PLATE-22
B042693	PLATE-27	B073817	PLATE-26	B074657	PLATE-37
B042750	PLATE-35	B073821	PLATE-28	B074657	PLATE-22

117

Print Date: 07-Apr-2022

PART NO	BLOCK	PART NO	BLOCK	PART NO	BLOCK
B074851	PLATE-35.1	B075614	PLATE-30	B076073	PLATE-23
B074905	PLATE-23	B075616	PLATE-35	B076078	PLATE-34
B074962	PLATE-20	B075616	PLATE-22	B076112	PLATE-8
B074970	PLATE-8	B075622	PLATE-35	B076120	PLATE-29
B074971	PLATE-8	B075622	PLATE-35.1	B076142	PLATE-37
B074999	PLATE-27	B075636	PLATE-35.1	B076200	PLATE-35
B075108	PLATE-31	B075687ED	PLATE-26	B076201	PLATE-35
B075178R	PLATE-31	B075693	PLATE-28	B076208	PLATE-34
B075313	PLATE-26	B075693	PLATE-28	B076209	PLATE-28
B075313	PLATE-26	B075694	PLATE-25	B076210	PLATE-28
B075327	PLATE-35	B075697	PLATE-27	B076258	PLATE-30
B075327	PLATE-35.1	B075700	PLATE-27	B076260	PLATE-30
B075327	PLATE-31	B075707	PLATE-20	B076265	PLATE-30
B075336	PLATE-19	B075716	PLATE-34	B076267	PLATE-30
B075337	PLATE-20	B075724ED	PLATE-30	B076269	PLATE-30
B075426	PLATE-35	B075732	PLATE-23	B076290	PLATE-24
B075426	PLATE-35.1	B075790	PLATE-19	B076292	PLATE-24
B075443	PLATE-31	B075790	PLATE-20	B076295	PLATE-18
B075459	PLATE-18	B075796	PLATE-20	B076295	PLATE-26
B075475	PLATE-27	B075798	PLATE-18	B076308	PLATE-28
B075485	PLATE-27	B075807	PLATE-24	B076334	PLATE-22
B075488	PLATE-27	B075808	PLATE-24	B076334	PLATE-22
B075489	PLATE-27	B075835	PLATE-27	B076364	PLATE-34
B075490	PLATE-27	B075836	PLATE-27	B076406	PLATE-19
B075491	PLATE-27	B075838	PLATE-27	B076406	PLATE-20
B075500	PLATE-30	B075861	PLATE-35	B076410	PLATE-37
B075500CB	PLATE-30	B075861	PLATE-35.1	B076437	PLATE-35
B075500EG	PLATE-30	B075949	PLATE-27	B076437	PLATE-35.1
B075500GY	PLATE-30	B075950	PLATE-27	B076438	PLATE-36
B075500NB	PLATE-30	B075952	PLATE-30	B076438	PLATE-35.1
B075500WR	PLATE-30	B075960	PLATE-34	B076455	PLATE-27
B075531ED	PLATE-30	B075971	PLATE-8	B076650R	PLATE-37
B075560BL	PLATE-30	B075979	PLATE-22	B076650R	PLATE-22
B075560CB	PLATE-30	B075984	PLATE-30	B076732	PLATE-20
B075560EG	PLATE-30	B075985	PLATE-30	B076903	PLATE-19
B075560GY	PLATE-30	B075986	PLATE-37	B077245	PLATE-24
B075560NB	PLATE-30	B075989	PLATE-22	B077245	PLATE-25
B075560WR	PLATE-30	B076007	PLATE-27	B077458	PLATE-24
B075562ED	PLATE-30	B076012	PLATE-22	B077461	PLATE-25
B075565	PLATE-34	B076036	PLATE-34	B077465	PLATE-25
B075566	PLATE-34	B076036	PLATE-34	B077465	PLATE-25
B075593	PLATE-18	B076069	PLATE-30	B077481	PLATE-24
B075595	PLATE-18	B076069	PLATE-30	B077685	PLATE-31

118