Parts Catalog

Commercial Vehicle

Ape_E-Xtra_LDxPlus_EV_FX

PIAGGIO VEHICLES PRIVATE LIMITED
Registered Office: Bund Garden Road ,Opp. Residency Club , Pune (India)

Print Date: 07-Apr-2022

PLATES INDEX

Sr No.	Plate Name	Plate No.	Page No.
1	POWERPACK ASSLY & Mountings	1	1-2
2	PowerPack Assly Muff Cup & Its Mountings	2	3-4
3	FIXED BATTERY , & CHARGER AMARON (NMC)	3	5-6
4	E-BOX ASSLY	4	7-8
5	E-BOX CABLES, BATTERY CABLES ,RELAY & DC-DC CONVERTOR	5	9-10
6	WIRING HARNESS & TAIL LAMP ASSLY & AUXILIARY BATTERY	6	11-14
7	SWITCHES	7	15-16
8	DASHBOARD & SWITCHES	8	17-18
9	HANDLE BAR	9	19-22
10	FRONT & REAR MUDGUARD	10	23-24
11	HEAD LAMP & BEZEL ASSY, LOGO & SUPPORT	11	25-26
12	STICKERS	12	27-28
13	Main frame Assly & Cargo Body & Mirror	13	29-32
14	DOORS, TOOLS AND WHEELS	14	33-38
15	TOOLS AND WHEELS	15	39-40
16	Windshield /Glass/ Seats/ Carpets/Mirrors &Engine Door.	16	41-42
17	WINDSCREEN WIPER	17	43-44
18	SELECTORS - SWITCHES - BUTTONS	18	45-46
19	STEERING COLUMN & FRONT SUSPENSION	19	47-50
20	REAR SUSPENSION - SHOCK ABSORBER/S & ENGINE SUPPORT	20	51-54
21	MUF CUP & DRIVE SHAFT & BELLOW	21	55-56
22	BRAKE - TANDEM MASTER CYLINDER, BRAKE PIPE AND HAND BRAKES	22	57-60
23	FRONT BRAKE ASSEMBLY SELF ADJUSTING (DIA 180 X 40 MM)	23	61-62
24	REAR BRAKE ASSEMBLY SELF ADJUSTING (DIA 180 X 40 MM)	24	63-64

Print Date: 07-Apr-2022

PICTORIAL PLATES INDEX

PLATE-1 **POWERPACK ASSLY & Mountings**

Page No. :1-2

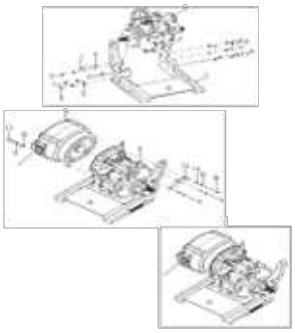

PLATE-2 **PowerPack Assly Muff Cup & Its Mountings**

Page No. :3-4

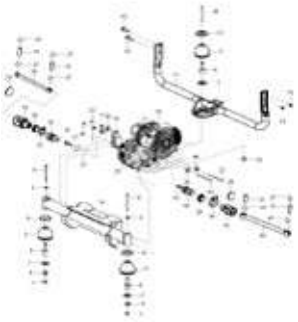

PLATE-3 **FIXED BATTERY , & CHARGER AMARON (NMC)**

Page No. :5-6

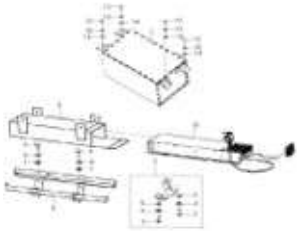

PLATE-4 **E-BOX ASSLY**

Page No. :7-8

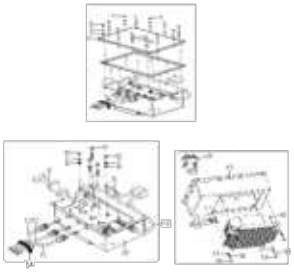

PLATE-5 **E-BOX CABLES, BATTERY CABLES ,RELAY & DC-DC CONVERTOR**

Page No. :9-10

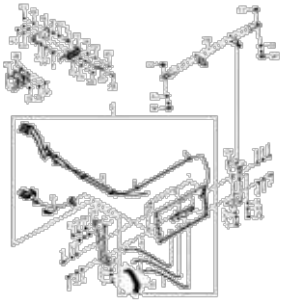

PLATE-6 **WIRING HARNESS & TAIL LAMP ASSLY & AUXILIARY BATTERY**

Page No. :11-14

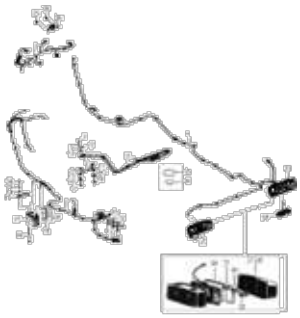

PLATE-7 **SWITCHES**

Page No. :15-16

PLATE-8 **DASHBOARD & SWITCHES**

Page No. :17-18

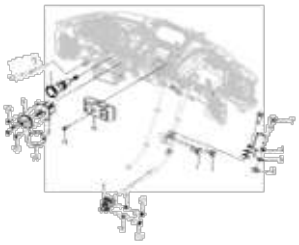

Print Date: 07-Apr-2022

PICTORIAL PLATES INDEX

PLATE-9 **HANDLE BAR**

Page No. :19-22

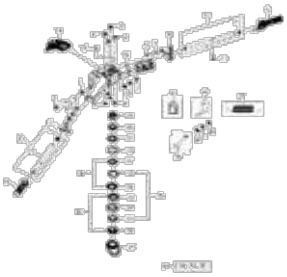

PLATE-10 **FRONT & REAR MUDGUARD**

Page No. :23-24

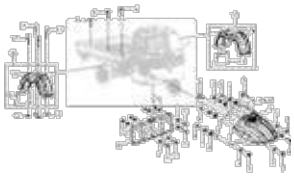

PLATE-11 **HEAD LAMP & BEZEL ASSY, LOGO & SUPPORT**

Page No. :25-26

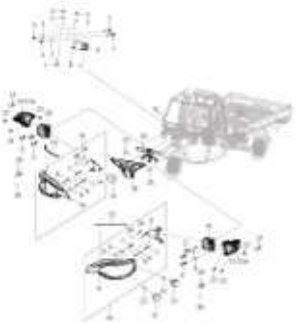

PLATE-12 **STICKERS**

Page No. :27-28

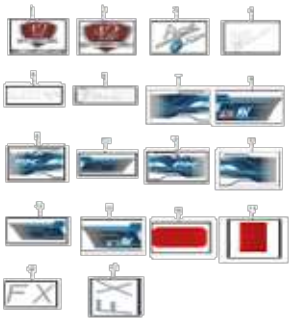

PLATE-13 **Main frame Assly & Cargo Body & Mirror**

Page No. :29-32

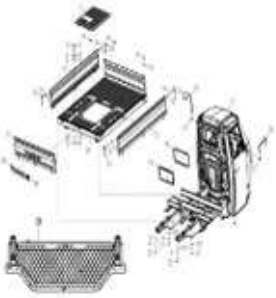

PLATE-14 **DOORS, TOOLS AND WHEELS**

Page No. :33-38

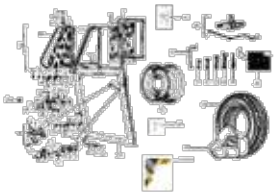

PLATE-15 **TOOLS AND WHEELS**

Page No. :39-40

PLATE-16 **Windshield /Glass/ Seats/ Carpets/Mirrors &Engine Door.**

Page No. :41-42

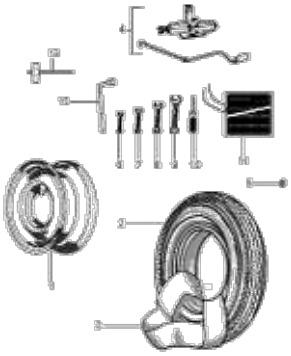

Print Date: 07-Apr-2022

PICTORIAL PLATES INDEX

PLATE-17 WINDSCREEN WIPER

Page No. :43-44

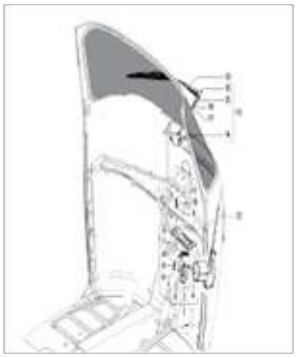

PLATE-18 SELECTORS - SWITCHES - BUTTONS

Page No. :45-46

PLATE-19 STEERING COLUMN & FRONT SUSPENSION

Page No. :47-50

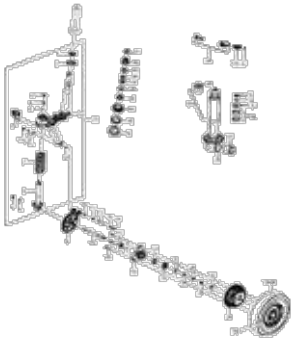

PLATE-20 REAR SUSPENSION - SHOCK ABSORBER/S & ENGINE SUPPORT

Page No. :51-54

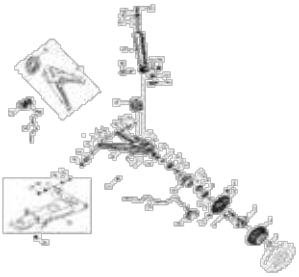

PLATE-21 MUF CUP & DRIVE SHAFT & BELLOW

Page No. :55-56

PLATE-22 BRAKE - TANDEM MASTER CYLINDER, BRAKE PIPE AND HAND BRAKES

Page No. :57-60

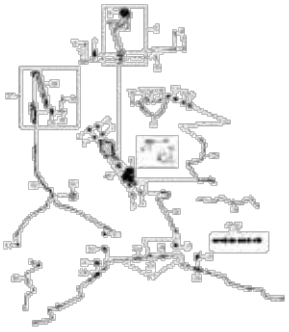

PLATE-23 FRONT BRAKE ASSEMBLY SELF ADJUSTING (DIA 180 X 40 MM)

Page No. :61-62

PLATE-24 REAR BRAKE ASSEMBLY SELF ADJUSTING (DIA 180 X 40 MM)

Page No. :63-64

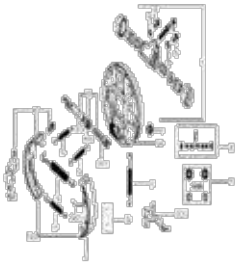

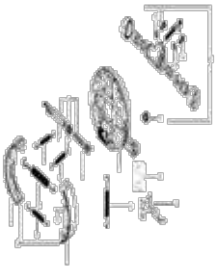

Print Date: 07-Apr-2022

PLATE-1

POWERPACK ASSLY & Mountings

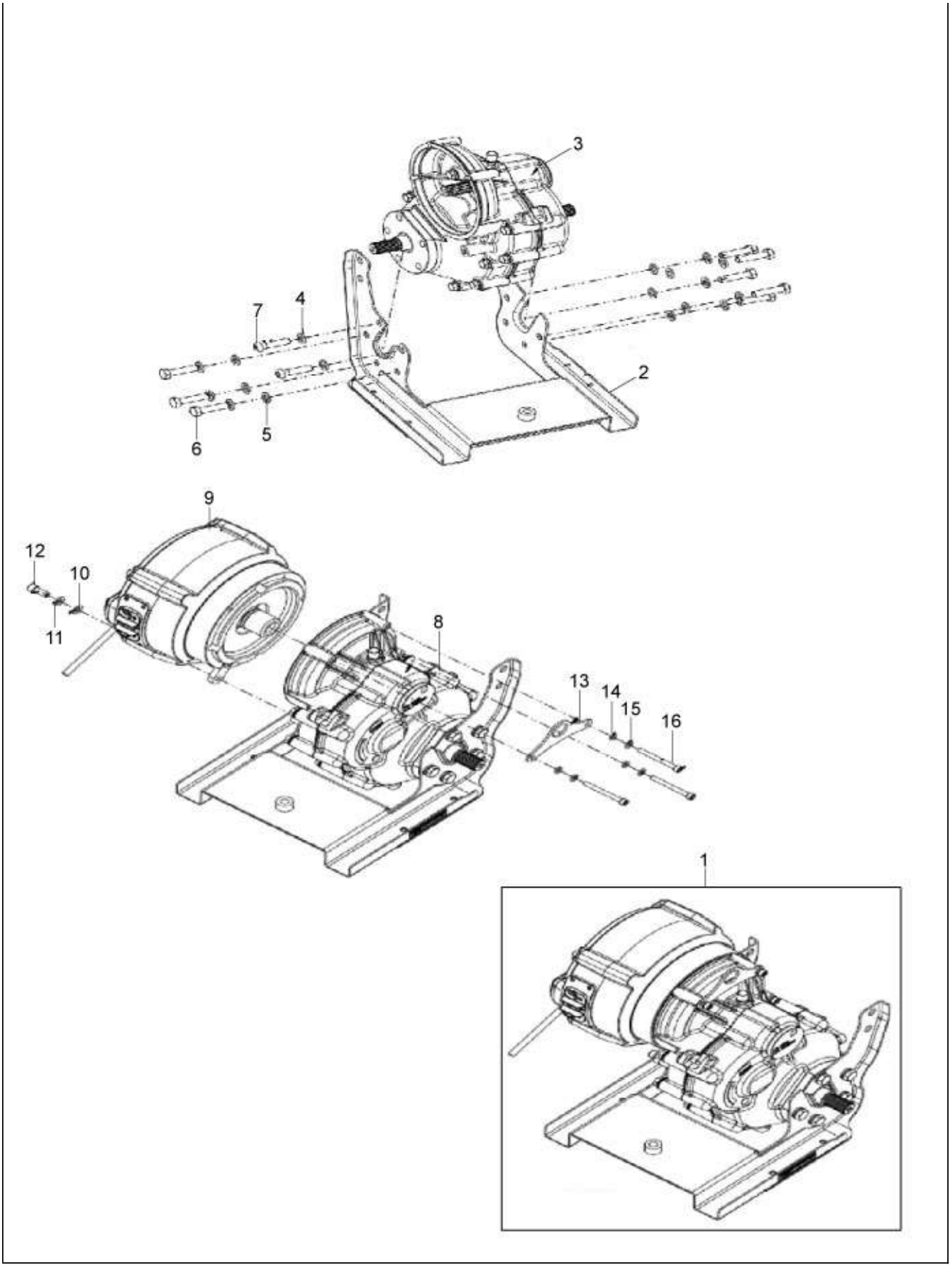
3
7
4
2
6
5
9
12
10
11
8
13
14
15
16
1

1

Print Date: 07-Apr-2022

PLATE-1

POWERPACK ASSLY & Mountings

Fig. No.	Part No.	Description	Qty	Remarks
1	6A001498	EV POWER PACK ASSLY. KIT (	1	
1	6A001877	EV POWER PACK ASSLY. KIT	1	App. From cha. cutoff MBX0007ZNZG121046
2	6A001421	ELECTRIC MOTOR MTG. BKT.	1	
3	6A001554	GEAR BOX	1	
4	16410	SPRING WASHER	10	
5	286328	PLAIN WASHER 20X10.2X2	8	
6	6C000420	HEXA BOLT M10X1.5X40	8	
7	6C000421	BUTTON HEAD M10X1.5X40	2	
8	6A001555	TRANSMISSION ASSLY	1	
9	6D000799	TRACTION MOTOR	1	
9	6A001879	TRACTION MOTOR	1	App. From cha. cutoff MBX0007ZNZG121046
10	6C000422	PLAIN WASHER M8 8.8 NI-PLATED 8U	1	
11	6C000423	SPRING WASHER M8 8.8 NI-PLATED 8U	1	
12	6C000425	ALLEN BOLT	1	
13	6A001689	LIFT HOOK	3	
14	3058	PLAIN WASHER 15X8.4X1.5	3	
15	16408	SPRING WASHER M8	1	
16	6C000424	ALLEN HEAD M6X1.0X50 HFT 8.8 ZN-FE BI 8U	1	

2

Print Date: 07-Apr-2022

PLATE-2

PowerPack Assly Muff Cup & Its Mountings

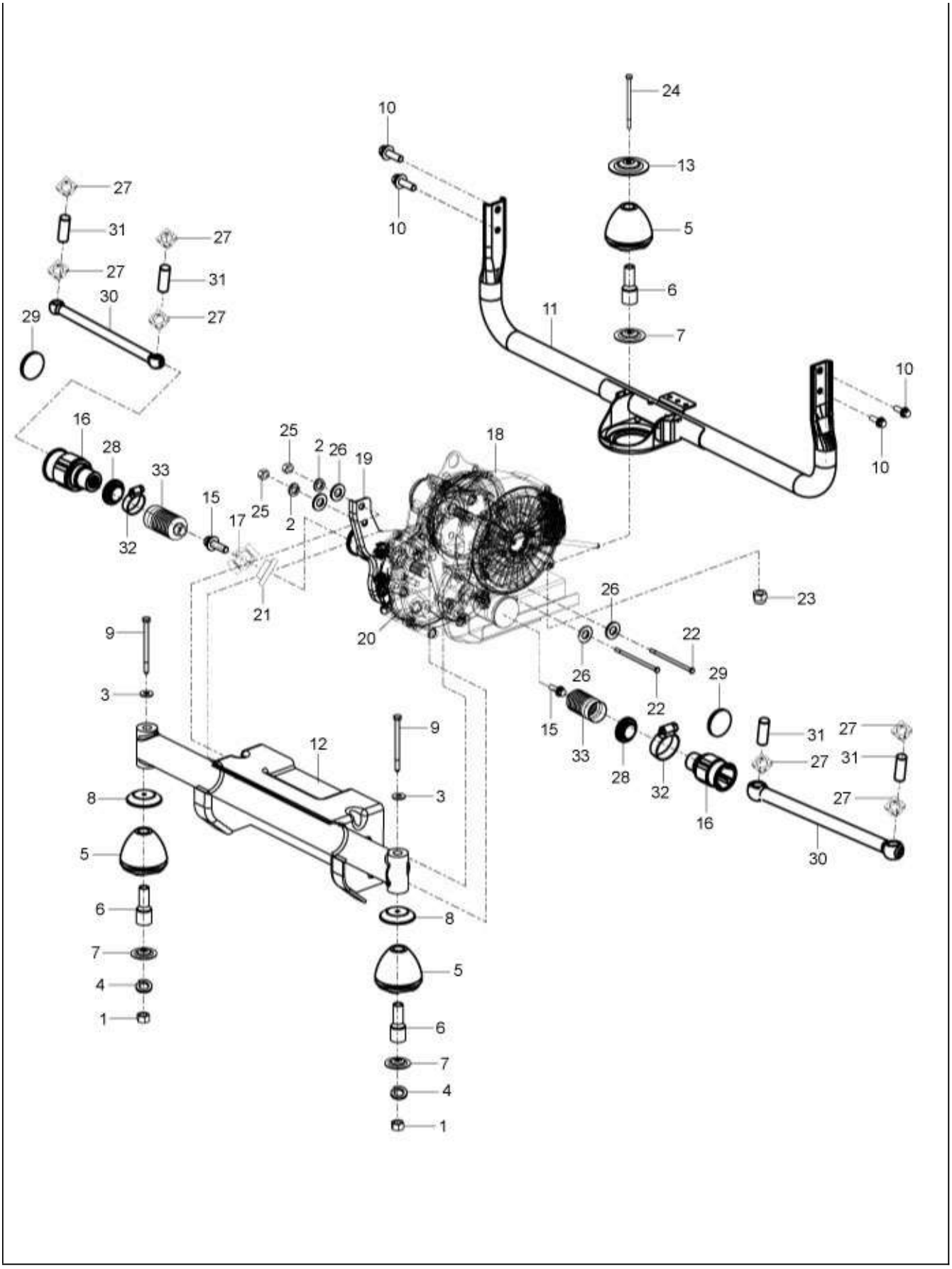
24
10
13
10
5
27
31
27
31
27
6
30
11
29
27
7
10
16
25
2
26
19
18
28
33
15
25
2
17
10
32
21
20
23
26
22
9
26
29
3
22
15
31
27
9
12
33
27
31
28
32
3
27
8
16
5
30
6
8
7
5
4
1
6
7
4
1

3

Print Date: 07-Apr-2022

PLATE-2

PowerPack Assly Muff Cup & Its Mountings

Fig. No.	Part No.	Description	Qty	Remarks
1	15335	HEX HD NUT M8	2	
2	16410	SPRING WASHER	2	
3	2383	PLAIN WASHER M20X8.5X2	2	
4	16408	SPRING WASHER M8	2	
5	265091	DUMPER ENGINE MTG.	3	
6	569241	SPACER	3	
7	569244	PLATE	3	
8	569377	PLATE	2	
9	604948	HEX.HDD BOLT M8 X 110 WITH POINTING	2	
10	645038	HEX HEAD SCREW M8 X 30 CL8.8	4	
11	6A001417	REAR CROSS MEMBER ASSLY. MOTOR MTG.	1	
12	6C000156	POWERPACK MTG ASSLY FRONT	1	
13	569375	PLATE	1	
14	6A001498	EV POWER PACK ASSLY. KIT (	1	
14	6A001877	EV POWER PACK ASSLY. KIT	1	App. From cha. cutoff MBX0007ZNZG121046
15	31118	SCREW M8X20	2	
16	6C000580	MUFF CUP	2	
17	6C000316	LOCK PLATE ASSLY	2	
18	6A001490	MOTOR ASSLY.	1	
18	6A001878	MOTOR ASSLY.	1	App. From cha. cutoff MBX0007ZNZG121046
19	6A001421	ELECTRIC MOTOR MTG. BKT.	2	
20	6A001554	GEAR BOX	1	
21	6C000632	RUBBER WASHER	2	
22	6C000241	HEX HD BOLT M10X210 CL 10.9	2	
23	B008292	HEX NUT M8 X 10.4 THK (NYLOCK)	1	
24	272178	HEX. HDD BOLT M8 X 122 CL 10.9	1	
25	231370	SELF BREAKING NUT M10	2	
26	286328	PLAIN WASHER 20X10.2X2	4	
27	6C000319	SLIDING BLOCK	8	
28	6C000525	RUBBER WASHER	2	
29	6C000632	RUBBER WASHER	2	
30	6C000578	PROPELLER SHAFT S/A	1	
31	113099	PIVOT	4	
32	612459	WORM TYPE HOSE CLIP SIZE 16	2	
33	6C000255	BELLOW	2	

4

Print Date: 07-Apr-2022

PLATE-3

FIXED BATTERY , & CHARGER AMARON (NMC)

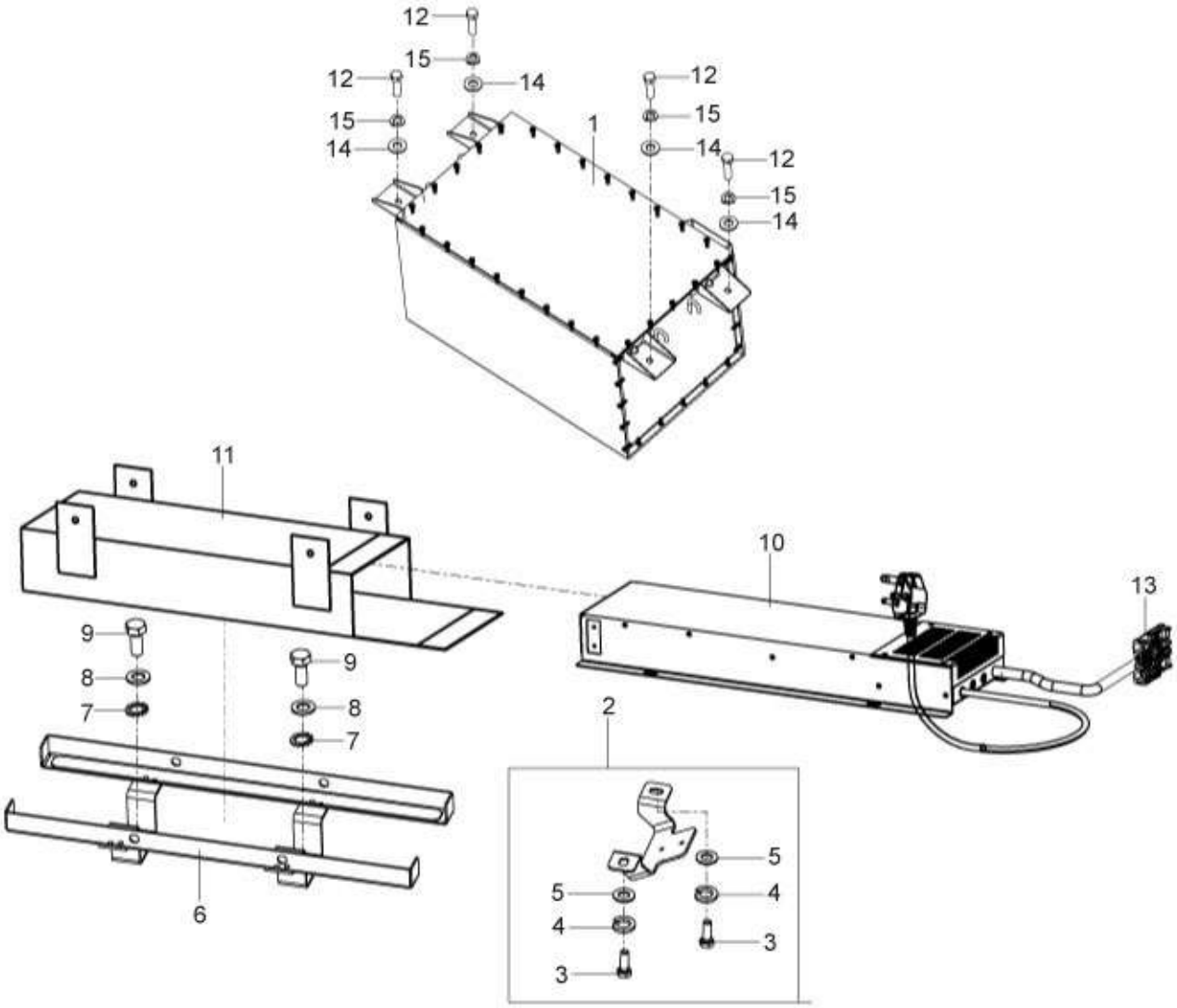
12
15
14
1
11
10
13
9
8
7
2
5
4
3
6

5

Print Date: 07-Apr-2022

PLATE-3

FIXED BATTERY , & CHARGER AMARON (NMC)

Fig. No.	Part No.	Description	Qty	Remarks
1	6D000769	BATTERY , AMARON (NMC)	1	
2	6D000839	BKT, CHARGER CONN ASSLY	1	
3	31089	HEX HEAD SCREW M6X18 CL 8.8	1	
4	16406	SPRING WASHER M6 OD12	1	
5	3056	PLAIN WASHER M6 OD12	1	
6	6D000988	BRACKET CHARGER MOUNTING, ASSLY	1	
7	12540	SPRING WASHER M8	2	
8	3058	PLAIN WASHER 15X8.4X1.5	2	
9	6C000774	HEX BOLT M8X1.25	2	
10	6D000770	BATTERY CHARGER	1	only for Dom. Market.(India)
11	6D001002	CHARGER BAG	1	
12	645038	HEX HEAD SCREW M8 X 30 CL8.8	4	
13	B041567	CYLINDERICAL HEADED SCREW(M4 X 22)	1	
14	808000826	PLAIN WASHER M8	4	
15	16408	SPRING WASHER M8	4	

6

Print Date: 07-Apr-2022

PLATE-4
E-BOX ASSLY

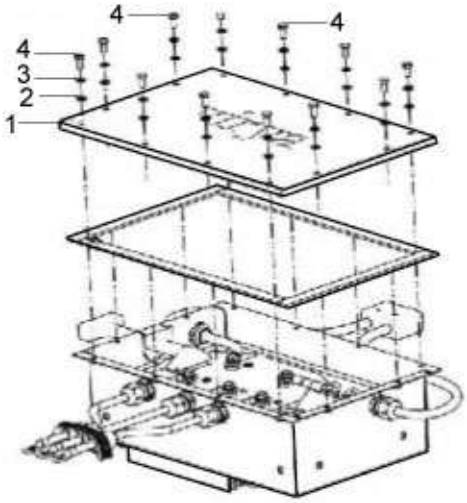
4
4
4
3
2
1

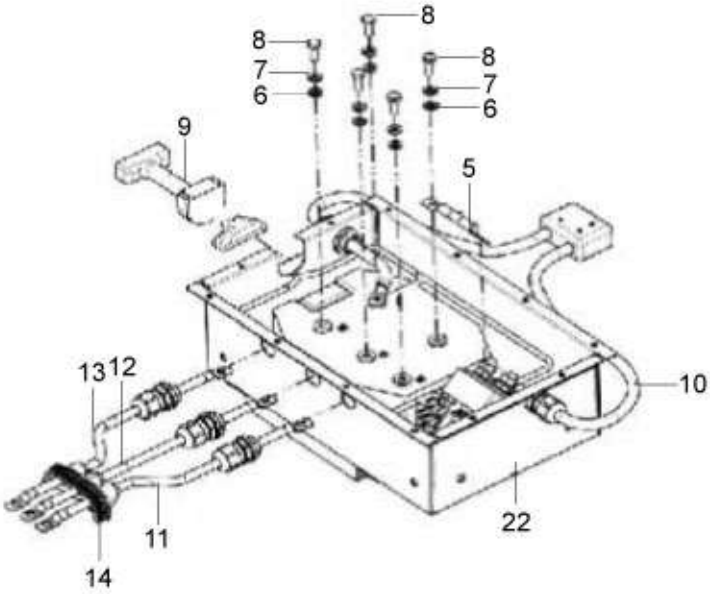
8
8
7
6
8
7
6
9
5
13
12
10
11
22
14

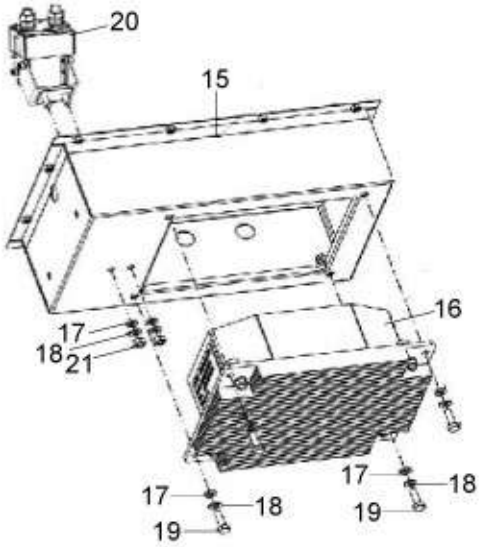
20
15
16
17
18
21
17
18
19
17
18
19

7

Print Date: 07-Apr-2022

PLATE-4
E-BOX ASSLY

Fig. No.	Part No.	Description	Qty	Remarks
1	6D000523	E-BOX COVER	1	
2	3055	PLAIN WASHER M5	12	
3	16405	SPRING WASHER M5	12	
4	20105	PLAIN NUT M5	12	
5	6D000520	CABLE LINK 66MM	1	
6	6D000966	PLAIN WASHER M6 SS	5	
7	6D000967	SPRING WASHER M6 SS	5	
8	6D000968	HEX BOLT M6X1.0X16 SS	5	
9	6D000939	PIGTAIL E-BOX E-CARGO	1	
9	6D001164	PIGTAIL, E-BOX	1	App. From cha. cutoff MBX0007ZNZG121046
10	6D000805	E-BOX TO BATTERY CABLE WITH GLAND	1	
11	6D000884	MOTOR ASSY CABLE U 600MM	1	
11	6D001195	MOTOR ASSY CABLE U 510MM	1	App. From cha. Cutoff MBX0007ZNZG121046
12	6D000885	MOTOR ASSY CABLE V 560MM	1	
12	6D001196	MOTOR ASSY CABLE V 470MM	1	App. From cha. Cutoff MBX0007ZNZG121046
13	6D000886	MOTOR ASSY CABLE W 530MM	1	
13	6D001197	MOTOR ASSY CABLE W 460MM	1	App. From cha. Cutoff MBX0007ZNZG121046
14	6D000463	RUBBER SEAL MOTOR	1	
15	6D000794	E-BOX ASSLY	1	
15	6D001194	E-BOX ASSLY	1	App. From cha. cutoff MBX0007ZNZG121046
16	6D000965	TCU ASSY	1	
17	3056	PLAIN WASHER M6 OD12	6	
18	016406	SPRING WASHER	6	
19	6D000528	HEXA BOLT M6X1.0X20	4	
20	6D000522	CONTRACTOR ASSY	1	
21	30089	PLAIN NUT M6	2	
22	6D000794	E-BOX ASSLY	1	
22	6D001194	E-BOX ASSLY	1	App. From cha. cutoff MBX0007ZNZG121046

8

Print Date: 07-Apr-2022

PLATE-5

E-BOX CABLES, BATTERY CABLES ,RELAY & DC-DC CONVERTOR

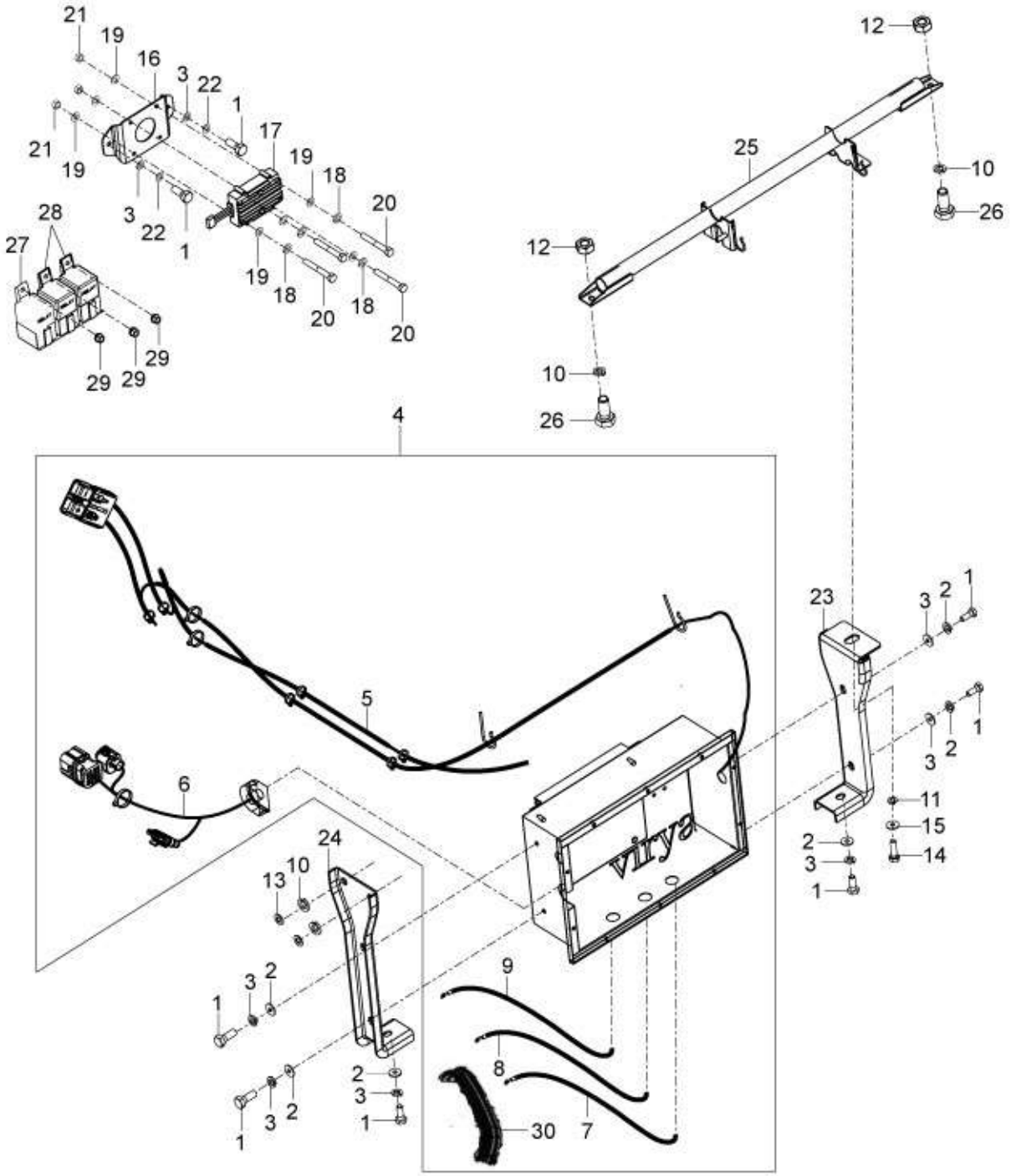
21
19
16
3
22
1
17
19
18
20
28
27
29
12
25
10
26
4
5
6
23
24
13
9
8
7
30
11
15
14
virya

9

Print Date: 07-Apr-2022

PLATE-5

E-BOX CABLES, BATTERY CABLES ,RELAY & DC-DC CONVERTOR

Fig. No.	Part No.	Description	Qty	Remarks
1	31088	HEX HD SCREW M6 X 16 CL 8.8 (811061623)	8	
2	660032	PLAIN WASHER 6.2 X 18 X 2 (SS)	6	
3	16406	SPRING WASHER M6 OD12	8	
4	6D000794	E-BOX ASSLY	1	
5	6D000805	E-BOX TO BATTERY CABLE WITH GLAND	1	
6	6D000939	PIGTAIL E-BOX E-CARGO	1	
7	6D000884	MOTOR ASSY CABLE U 600MM	1	
7	6D001195	MOTOR ASSY CABLE U 510MM	1	App. From cha. Cutoff MBX0007ZNZG121046
8	6D000885	MOTOR ASSY CABLE V 560MM	1	
8	6D001196	MOTOR ASSY CABLE V 470MM	1	App. From cha. Cutoff MBX0007ZNZG121046
9	6D000886	MOTOR ASSY CABLE W 530MM	1	
9	6D001197	MOTOR ASSY CABLE W 460MM	1	App. From cha. Cutoff MBX0007ZNZG121046
10	16408	SPRING WASHER M8	2	
11	16410	SPRING WASHER	1	
12	20108	HEX NUT M8	2	
13	3058	PLAIN WASHER 15X8.4X1.5	2	
14	31154	HEX HDD SCREW M10X22 CL 8.8	1	
15	286328	PLAIN WASHER 20X10.2X2	1	
16	6C000228	DC DC CONVERTOR MTG BKT	1	
17	6D000378	DC-DC CONVERTER	1	
18	16405	SPRING WASHER M5	4	
19	3055	PLAIN WASHER M5	8	
20	6C000334	HEX HD SCREW M6X16 CL 8.8 (811061623)	4	
21	20105	PLAIN NUT M5	4	
22	3056	PLAIN WASHER M6 OD12	2	
23	6C000359	E-BOX MTG BKT-2 RH ASSLY	1	
24	6C000360	E-BOX MTG BKT-2 LH ASSLY	1	
25	6D000858	BKT, E-BOX MTG TUBE ASSLY	1	
26	31121	HEX.HEAD SCREW M8X28 CL 8.8	2	
27	6D000485	20A POWER RELAY	1	
28	6D000917	POWER RELAY NC TYPE W/ RESISTOR 20A	2	
29	20105	PLAIN NUT M5	3	
30	6D000463	RUBBER SEAL MOTOR	1	

10

Print Date: 07-Apr-2022

PLATE-6

WIRING HARNESS & TAIL LAMP ASSLY & AUXILIARY BATTERY

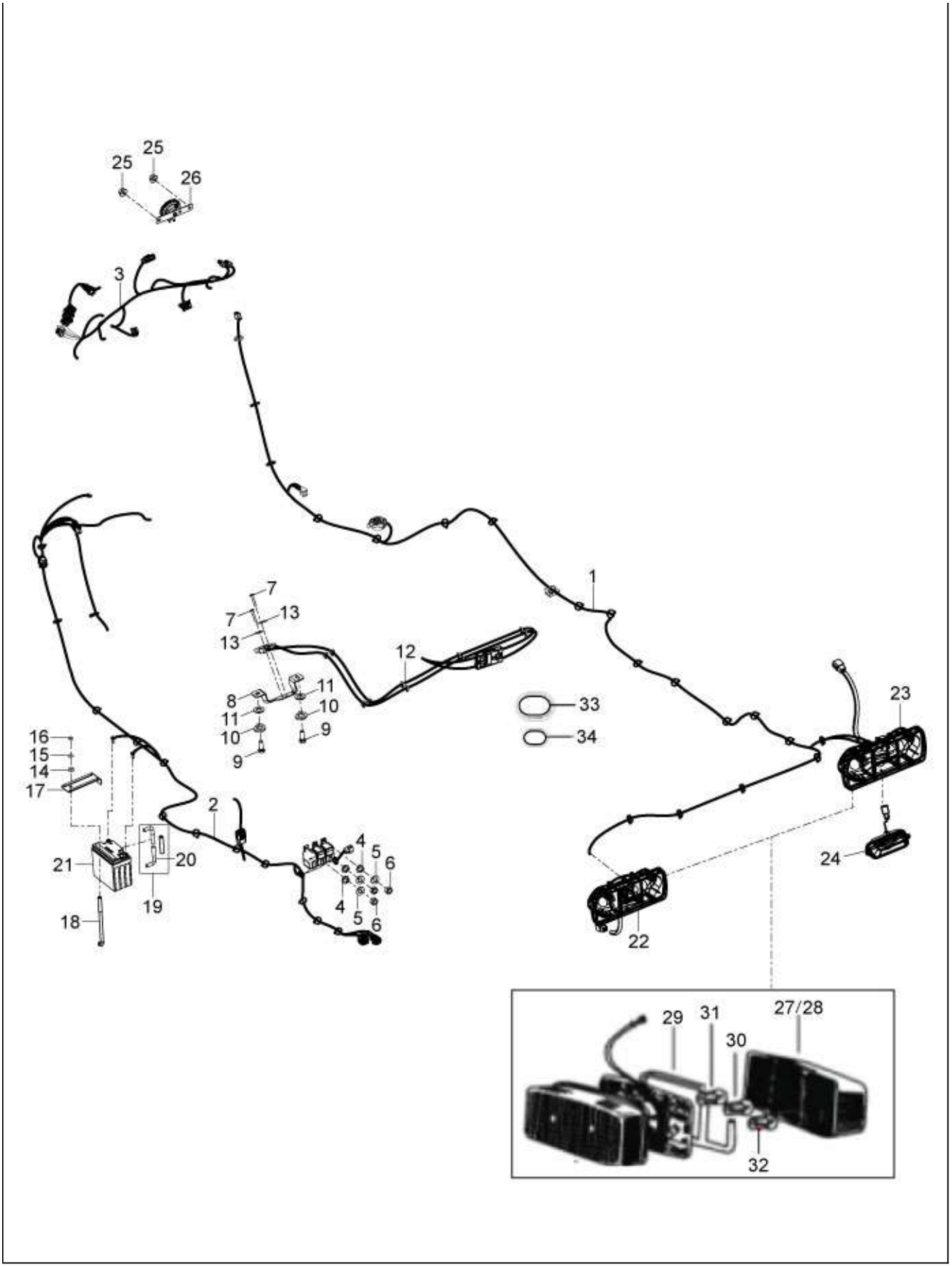
25
25
26
3
1
7
7
13
13
12
8
11
11
10
10
9
9
33
34
23
16
15
14
17
2
21
20
19
18
4
5
6
4
5
6
24
22
29
31
27/28
30
32

11

Print Date: 07-Apr-2022

PLATE-6

WIRING HARNESS & TAIL LAMP ASSLY & AUXILIARY BATTERY

Fig. No.	Part No.	Description	Qty	Remarks
1	6D000806	WIRING HARNESS,TAIL LAMP	1	
2	6D000807	WIRING HARNESS,MAIN	1	
3	6D000809	WIRING HARNESS, IP	1	
4	16405	SPRING WASHER M5	1	
5	3055	PLAIN WASHER M5	1	
6	20105	PLAIN NUT M5	1	
7	B074327	BOLT	2	
8	6D000839	BKT, CHARGER CONN ASSLY	1	
9	31089	HEX HEAD SCREW M6X18 CL 8.8	2	
10	16406	SPRING WASHER M6 OD12	2	
11	3056	PLAIN WASHER M6 OD12	2	
12	6D000834	CHARGER CABLE	1	
13	3054	PLAIN WASHER	2	
14	16408	SPRING WASHER M8	1	
15	20108	HEX NUT M8	1	
16	2383	PLAIN WASHER M20X8.5X2	1	
17	6D000355	BATTERY HOLDING PLATE	1	
18	6D000361	TENSION ROD	1	
19	6D000362	TENSION ROD ASSEMBLY	1	
20	6D000360	TENSION ROD	2	
21	6D000363	ORDINARY BATTERY 12V	1	
22	6D000899R	TAIL LAMP ASSY(LH) WITH REVERSE LIGHT	1	
23	6D000900R	TAIL LAMP ASSLY,RH	1	
24	6D001020	REGISTRATION PLATE LAMP	1	
25	261323	NUT	2	
26	B074033	HORN ASSLY(DIA 70)	1	
27	920083	TAIL LAMP LENSE LH WITH HARDWARE & GASKET	1	
28	920084	TAIL LAMP LENSE RH WITH HARDWARE & GASKET	1	
29	920081	TAIL LAMP ASSY. GASKET	2	
30	181746	INDICATOR BULB 12V 10W	2	
30	925581	INDICATOR LIGHT BULB 12V 21W AMBER COLOUR	2	
31	567700	BULB 10/5W (STOP LIGHT)	2	
32	181747	REVERSE LAMP BULB 12V 5W	2	
33	6D000370	GROMMET(70X 50 MM) FOR W/HS	1	
34	6D000251	GROMMET(60 X 80 MM) FOR W/HS	1	

12

Print Date: 07-Apr-2022

PLATE-6

WIRING HARNESS & TAIL LAMP ASSLY & AUXILIARY BATTERY

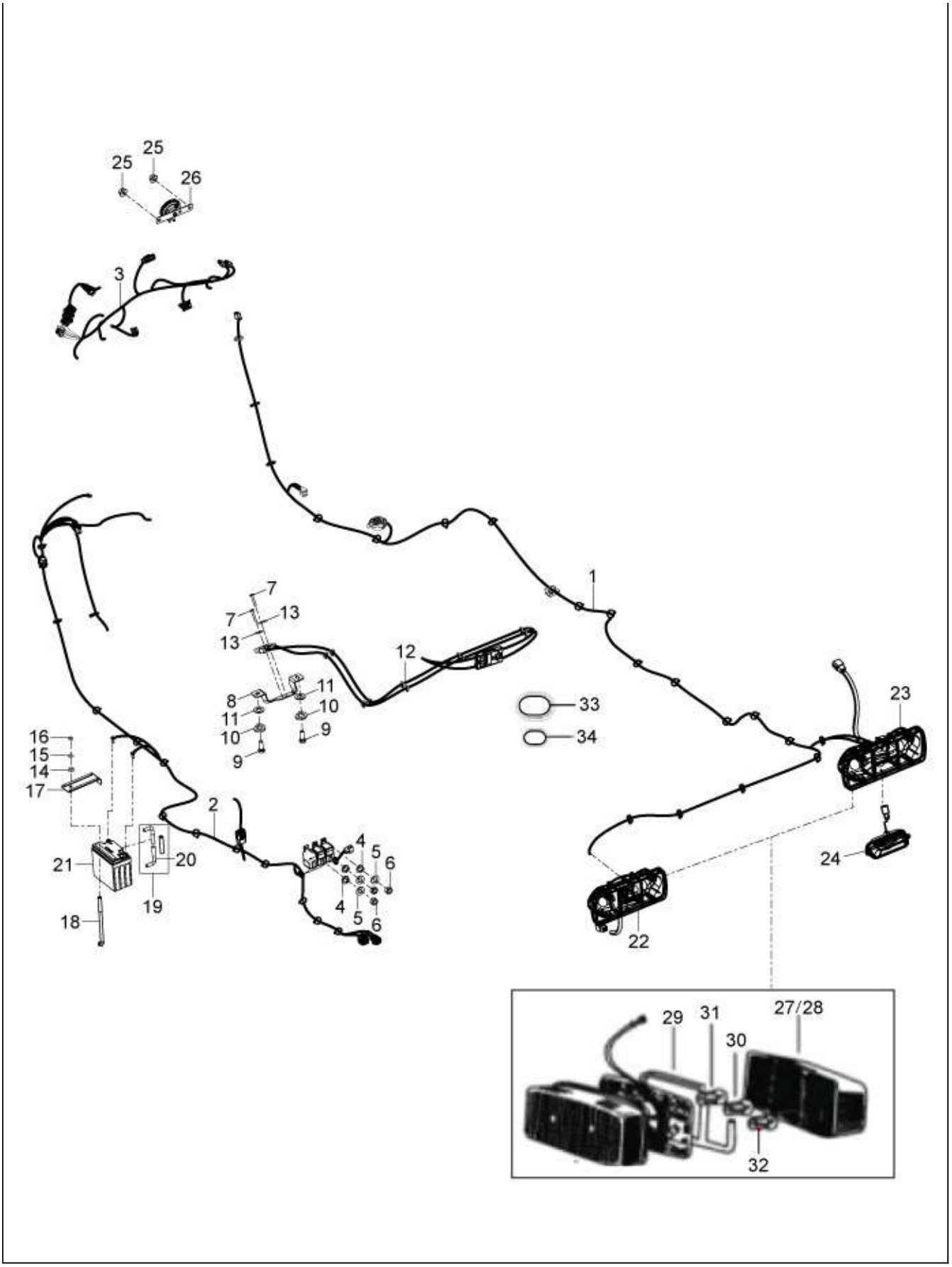
25
25
26
3
1
7
7
13
13
12
8
11
11
10
10
9
9
33
34
23
16
15
14
17
2
21
20
19
18
4
5
6
4
5
6
24
22
29
31
27/28
30
32

13

Print Date: 07-Apr-2022

PLATE-6

WIRING HARNESS & TAIL LAMP ASSLY & AUXILIARY BATTERY

Fig. No.	Part No.	Description	Qty	Remarks
35	6D001133	PIGTAIL,DC DC CONVERTER	1	NI
36	6D000808	PIGTAIL, E-BOX	1	NI

14

Print Date: 07-Apr-2022

PLATE-7
SWITCHES

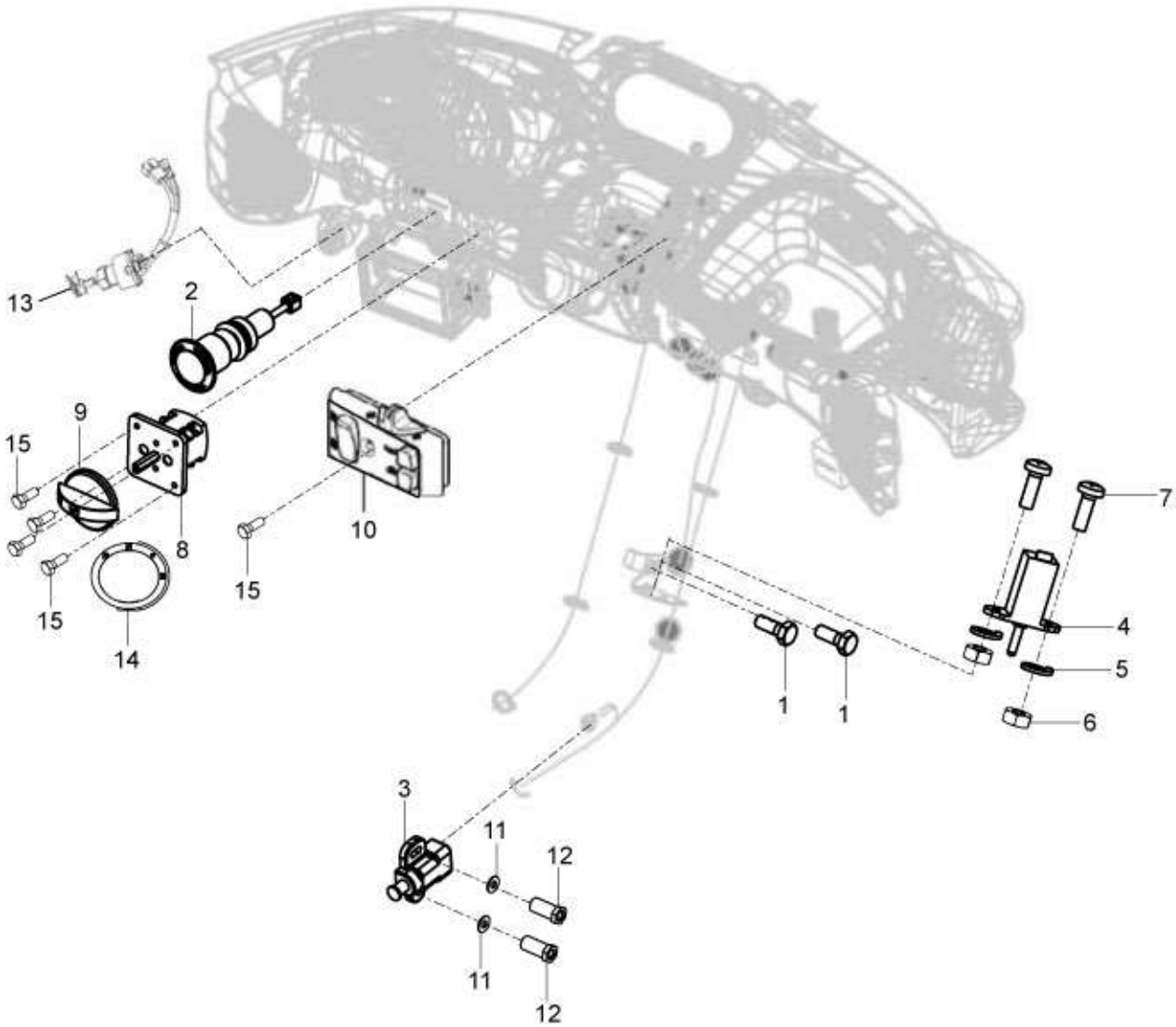
13
2
9
15
8
15
14
15
10
7
4
5
6
1
1
3
11
12
11
12

15

Print Date: 07-Apr-2022

PLATE-7
SWITCHES

Fig. No.	Part No.	Description	Qty	Remarks
1	31088	HEX HD SCREW M6 X 16 CL 8.8 (811061623)	2	
2	6D000365	SWITCH, EMERGENCY	1	
3	567498R	BRAKE/REVERSE LIGHT SW (INTEGRAL CAP)-PAV	1	
4	6D000366	POTENTIOMETER, BRAKE	1	
5	16404	SPRING WASHER M4	2	
6	20104	HEX NUT M4	2	
7	15996	PHIL RD HD SCREW M4X12	2	
8	6D000364	SWITCH, RNFB	1	
9	6B001798	FNRB SWITCH KNOB	1	
10	B073366R	HANDLE BAR SWITCH ASSLY-NEW	1	
11	6078	PLAIN WASHER 12 X 5.2 X 1	2	
12	B074568	SCREW TERMINAL	2	
13	6D001108	IGNITION SWITCH	1	Single Coupler
13	B024532	KEY IGNITION SWITCH W/COUPLER (PAVNA)	1	Double Coupler
14	6D000369	DECAL, RNFB	1	
15	15640	SCREW SECURING SWITCH	5	

16

Print Date: 07-Apr-2022

PLATE-8
DASHBOARD & SWITCHES

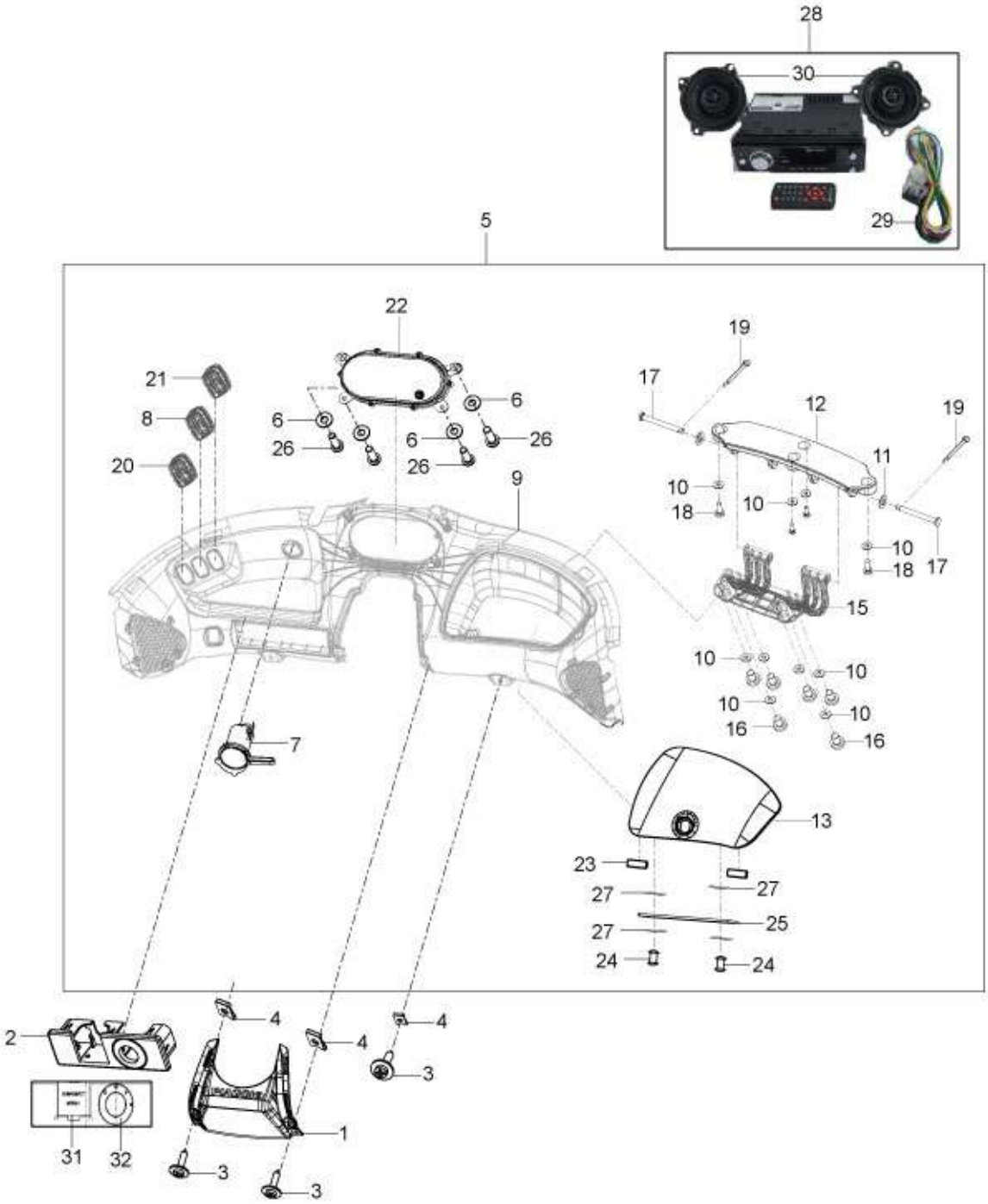
28
30
29
5
22
19
21
17
12
19
8
6
6
6
26
26
26
11
20
9
10
18
10
10
18
17
15
10
10
10
10
16
16
7
13
23
27
27
27
25
24
24
2
4
4
4
3
1
31
32
3
3

17

Print Date: 07-Apr-2022

PLATE-8

DASHBOARD & SWITCHES

Fig. No.	Part No.	Description	Qty	Remarks
1	6B001813	STEERING COLUMN COVER	1	
2	6B001791	EMERG. & FNRB SWITCH MTG COVER ASSLY	1	
3	660168	PAN SELF TP. SCREW 10 SGX13AB	7	
4	8080	SPRING PLATE	7	
5	6B002663	COMPLETE DASHBOARD ASSEMBLY	1	
6	6078	PLAIN WASHER 12 X 5.2 X 1	4	
7	B074905	MOBILE CHARGER	1	
8	B073479R	WIPER MOTOR SWITCH/ SWITCH WIPER MOTOR	1	
9	6B002665	DASHBOARD WITH GLOVE BOX COVER SUB ASSLY	1	
10	16670	PLAIN WASHER 12X4.5X1	7	
11	3055	PLAIN WASHER M5	2	
12	B073813	HINGE MTG. BKT.	1	
13	B073810	GLOVE BOX COVER	1	
14	6G000131	LOCK SET (APE 501 EV CARGO FX)	1	NI
15	B073814	HINGE	1	
16	B074261	PHIL RD HD SCREW M4	4	
17	B074262	PIN	2	
18	15996	PHIL RD HD SCREW M4X12	4	
19	567920	SPLIT PIN	2	
20	B073478R	SWITCH 3 POSITION	1	
21	B073481R	HAZARD WARNING SWITCH WITH CROWN CAP (12V)(VE)	1	
22	6D000367	INSTRUMENT CLUSTER	1	
23	B074275	RUBBER DAMPER	2	
24	567893	POP RIVET 4 X 9.5	2	
25	643691	BOLT LOCK PLATE	1	
26	661925	PHILIP PAN HEAD SCREW (M5 X 0.8 X 1.6)	4	
27	3054	PLAIN WASHER	4	
28	KIT6D000952	KIT ELECTRONIC AUDIO SYSTEM AND PIGTAIL	1	
29	6D000948	PIGTAIL, MUSIC SYSTEM	1	
30	6D000952	ELECTRONIC AUDIO SYSTEM	1	
31	6B001793	EMERGENCY SWITCH FLAP COVER ASSLY	1	
32	6C000568	RNFB STICKER	1	

18

Print Date: 07-Apr-2022

PLATE-9
HANDLE BAR

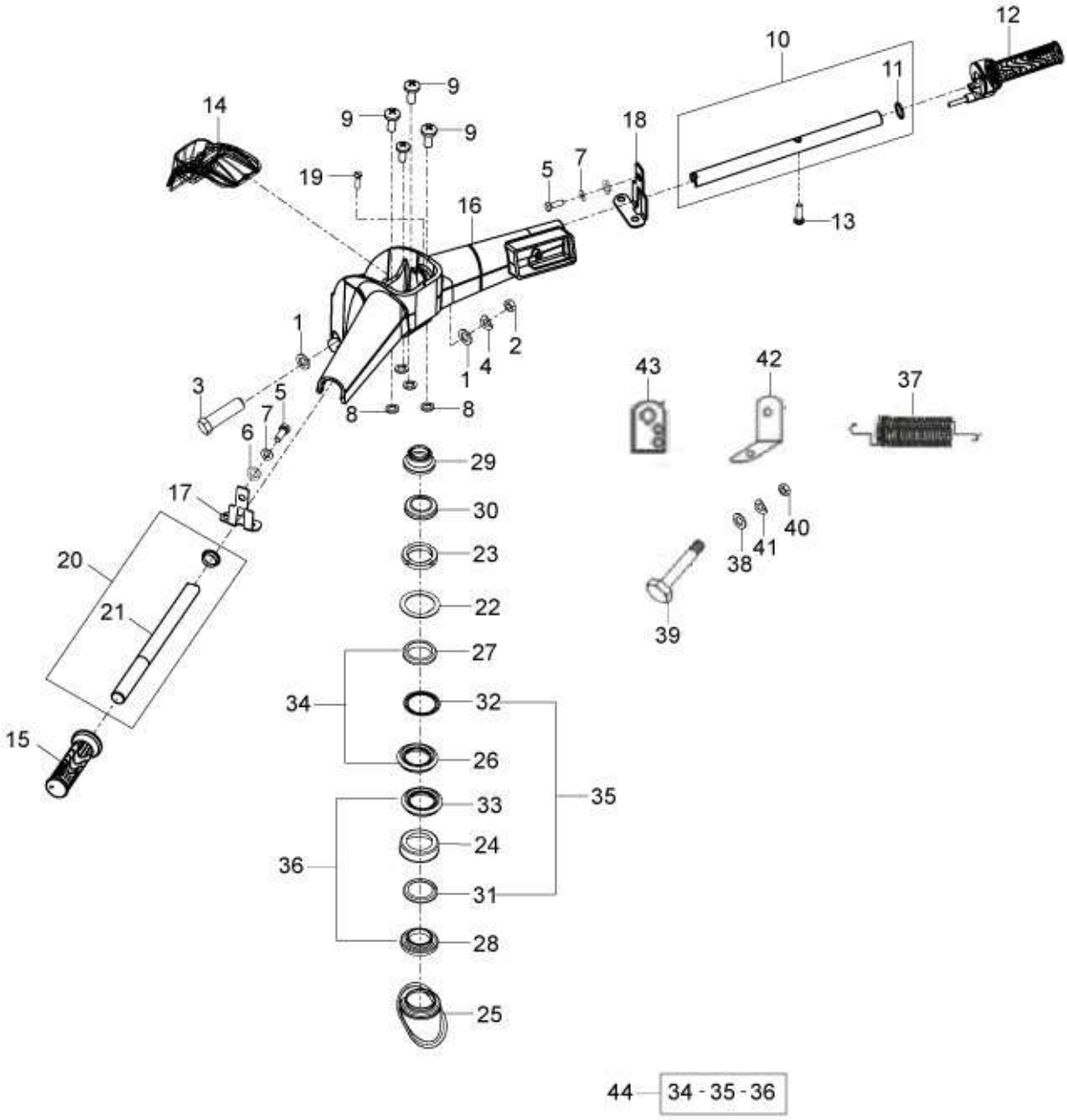
12
10
11
9
14
9
9
18
19
5
7
16
13
1
2
4
1
43
42
37
3
5
7
8
8
6
29
17
30
40
41
38
20
23
21
22
39
27
34
32
15
26
35
33
24
36
31
28
25
44
34 - 35 - 36

19

Print Date: 07-Apr-2022

PLATE-9
HANDLE BAR

Fig. No.	Part No.	Description	Qty	Remarks
1	16626	PLAIN WASHER (18X10.5X2)	2	
2	20110	HEX NUT M10	1	
3	30104	MOUNTING BOLT M10 X 75	1	
4	B041653	SPRING WASHER	1	
5	31089	HEX HEAD SCREW M6X18 CL 8.8	2	
6	16406	SPRING WASHER M6 OD12	2	
7	3056	PLAIN WASHER M6 OD12	2	
8	16405	SPRING WASHER M5	4	
9	6C000269	CYLINDRICAL HEAD SCREW WITH CROSS SLOT	4	
10	6C000265	TUBE FOR HANDLE BAR	1	
11	6C000268	PLAIN WASHER	1	
12	6D000405	ELECTRONIC HAND THROTTLE	1	
13	661925	PHILIP PAN HEAD SCREW (M5 X 0.8 X 1.6)	1	
14	6C000453	COVER HANDLE BAR TOP	1	
15	B073848	HANDLE BAR GRIP - LH	1	
16	6C000280ED	HANDLEBAR E-CITY-ED	1	
17	B078970	ACCELERATOR TUBE SUPPORT BKT LH	1	
18	B079248	ACCELERATOR TUBE SUPPORT BKT RH	1	
19	632158	CSK HEAD SCREW	1	
20	B078956	ACCELERATOR TUBE ASSLY	1	
21	B078957	LH TUBE WITH ENDPIECE ASSLY	1	
22	108873	STOP WASHER FOR HOLDING	1	
23	108874	SECURING RING NUT	1	
24	109064	DUST COVER	1	
25	109265	SPLASH GUARD DUST COVER	1	
26	567990	BEARING RACE UPPER BOTTOM	1	
27	567991	BEARING RACE UPPER TOP	1	
28	567992	BEARING RACE LOWER TOP	1	
29	604758	PROTECTION	1	
30	604759	RUBBER CAP STEERING COLUMN (N.I.)	1	
31	6C000191	LOWER BALL CAGE (VE)	1	
32	6C000190	UPPER BALL CAGE (VE)	1	
33	567993	BEARING RACE LOWER BOTTOM	1	
34	KIT95021R	STEERING CONE SET (UPPER)	1	
35	KIT96033R	MODIFIED BALL KIT FOR 3WH (WHITE)	1	

20

Print Date: 07-Apr-2022

PLATE-9
HANDLE BAR

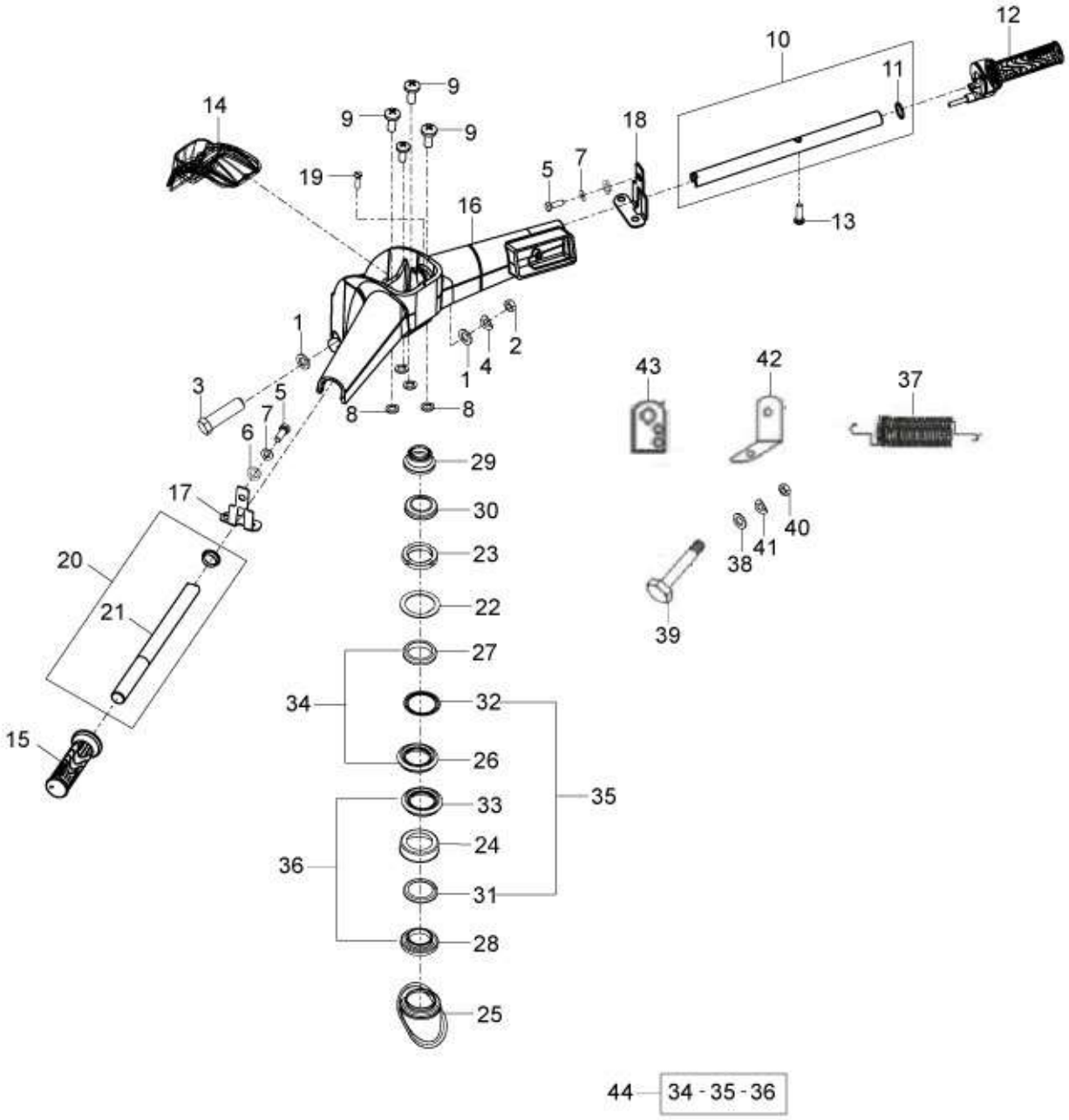
12
10
11
9
14
9
9
18
19
5
7
16
13
1
2
4
1
43
42
37
3
5
7
8
8
6
29
17
30
40
41
38
20
23
21
22
39
27
34
32
15
26
35
33
24
36
31
28
25
44
34 - 35 - 36

21

Print Date: 07-Apr-2022

PLATE-9
HANDLE BAR

Fig. No.	Part No.	Description	Qty	Remarks
36	KIT95022R	STEERING CONE SET (LOWER)	1	
37	B006853	SPRING HANDLE BAR	1	
38	13880	METALIC PLAIN WASHER	1	
39	31092	HEX. HD SCREW M6X25	1	
40	20106	HEX NUT M6	1	
41	16406	SPRING WASHER M6 OD12	1	
42	B074040	PLATE SPRING MTG. HANDLE BAR	1	
43	B074498	BRACKET	1	
44	KIT96016R	KIT OF STEERING CONE & BALL KIT	1	COSIST OF SR NO. 34,35,&36

22

Print Date: 07-Apr-2022

PLATE-10
FRONT & REAR MUDGUARD

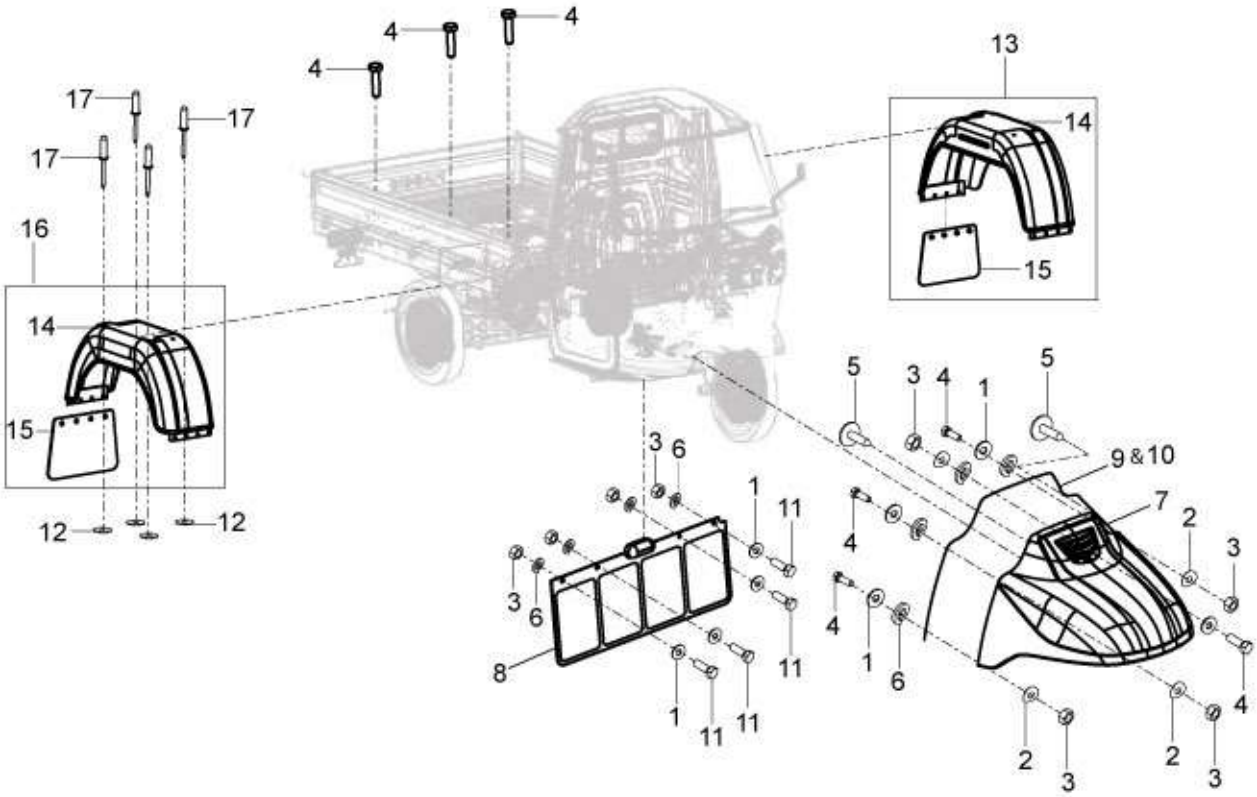
4
4
4
13
17
17
17
14
16
15
14
15
12
12
5
3
4
1
5
9&10
3
6
1
11
7
2
3
4
3
6
4
1
6
8
11
1
11
11
2
3
2
3
4

23

Print Date: 07-Apr-2022

PLATE-10

FRONT & REAR MUDGUARD

Fig. No.	Part No.	Description	Qty	Remarks
1	13880	METALIC PLAIN WASHER	8	
2	78307	BENT SPRING WASHER M6	8	
3	20106	HEX NUT M6	8	
4	31092	HEX. HD SCREW M6X25	12	
5	660168	PAN SELF TP. SCREW 10 SGX13AB	2	
6	16406	SPRING WASHER M6 OD12	4	
7	6B002645	FRONT MUDGARD	1	
8	116103	MUD FLAP FRONT	1	
9	B076801	FRONT MUDGUARD RUBBER BEADING	1	
10	B076802	FRONT MUDGUARD PARTITION RUBBER BEADING	1	
11	31088	HEX HD SCREW M6 X 16 CL 8.8 (811061623)	4	
12	16603	PLAIN WASHER (METALLIC)	8	
13	6B002646	REAR MUDGUARD & MUDFLAP S/A LH	1	NS
14	6B002644	REAR MUDGUARD	2	
15	142424	MUDFLAP FOR RR MUDGUARD	2	
16	6B002647	REAR MUDGUARD & MUDFLAP S/A RH	1	NS
17	604603	RIVET	8	

24

Print Date: 07-Apr-2022

PLATE-11

HEAD LAMP & BEZEL ASSY, LOGO & SUPPORT

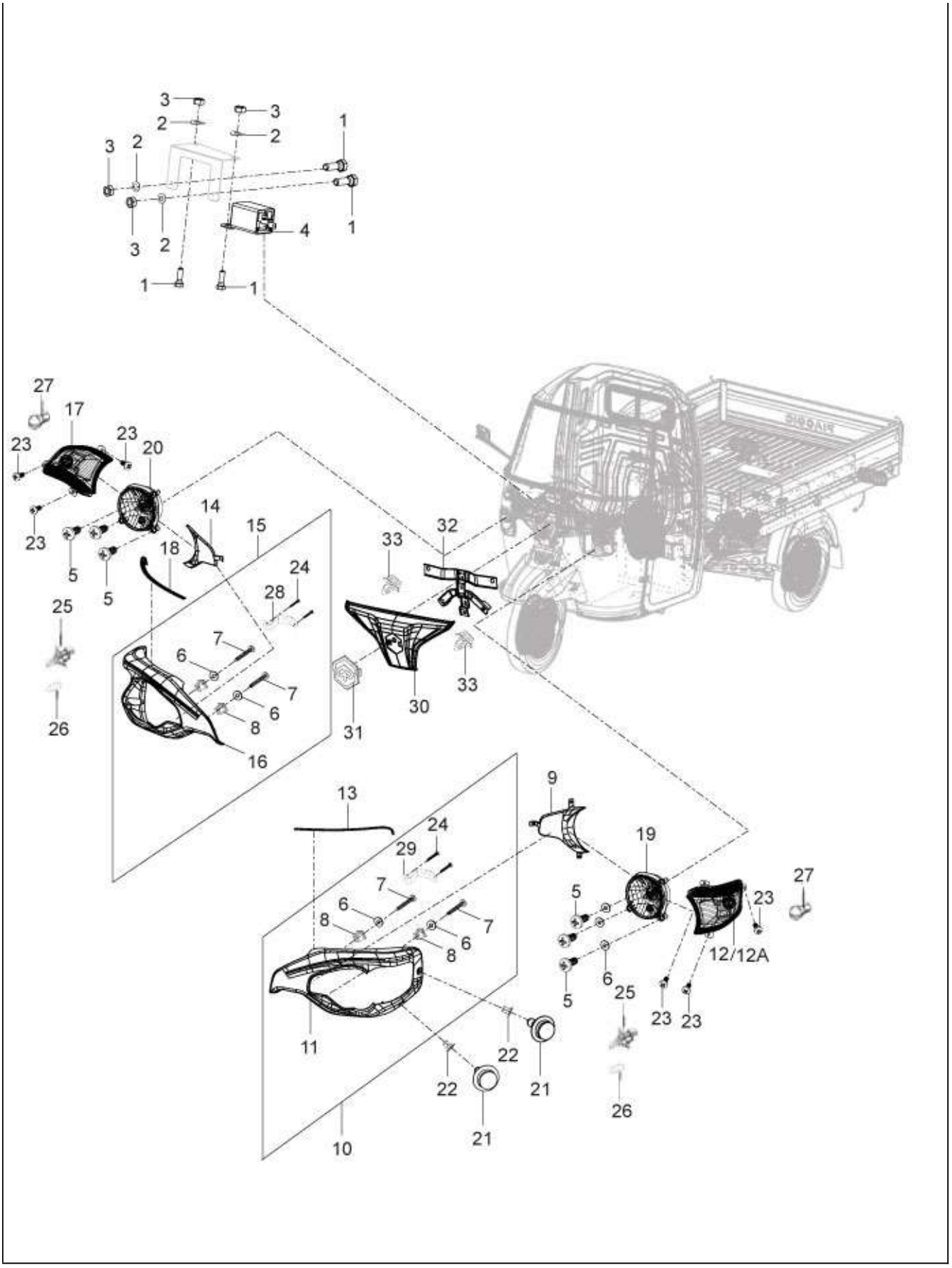
3
2
3
2
1
3
2
1
3
2
4
1
1
27
17
23
23
20
23
14
15
23
5
5
18
24
28
25
7
6
7
6
8
26
16
33
32
33
30
31
13
9
24
29
19
7
6
8
7
6
8
5
23
27
12/12A
6
5
25
23
23
11
22
21
22
21
26
10

25

Print Date: 07-Apr-2022

PLATE-11

HEAD LAMP & BEZEL ASSY, LOGO & SUPPORT

Fig. No.	Part No.	Description	Qty	Remarks
1	31058	HEX HEAD SCREW M5 X 16 CC8.8	4	
2	6965	SPRING WASHER DIA 5	4	
3	20105	PLAIN NUT M5	4	
4	6D000305	FLASHER RELAY (BG LI-IN)	1	
5	15900	HEAD LAMP SECURING SCREW/PAN SELF TAP SCREW	6	
6	16670	PLAIN WASHER 12X4.5X1	10	
7	18630	PAN SELF TAP SCREW 6SG X 25AB	4	
8	157716	SCREW ANCHORE	4	
9	6B003007	SIDE PROFILE LH	1	
10	6B002587	HEADLAMP BEZEL ASSEMBLY LH	1	
11	6B002582	HEADLAMP BEZEL LH	1	
12	6D000145R	FRONT DIRECTION INDICATORS LH	1	
12A	B078274	BLINKER HOUSING (LH)-(HOUSING + GLASS)	1	
13	6B002757	HEADLAMP BEZEL BEADING	2	
14	6B003008	SIDE PROFILR RH	1	
15	6B002588	HEAD LAMP BEZEL ASSLY. RH	1	
16	6B002583	HEAD LAMP BEZEL RH	1	
17	6D000146R	FRONT DIRECTION INDICATORS RH	1	
17A	B078272	BLINKER HOUSING (RH)-(HOUSING + GLASS)	1	
18	6B002757	HEADLAMP BEZEL BEADING	1	
19	6D000539	HEADLAMP WITH BLUE VISION - LH	1	
20	6D000540	HEADLAMP WITH BLUE VISION - RH	1	
21	B076605	PIN	4	
22	B076606	GROMMET	4	
23	661925	PHILIP PAN HEAD SCREW (M5 X 0.8 X 1.6)	6	
24	D9004159230	SCREW, W / WASHER	6	
25	B078286R	HS1_BULB (12 V _35/35W	2	
26	567593	BULB 12V 5W / LAMP 4W	2	
27	925581	INDICATOR LIGHT BULB 12V 21W AMBER COLOUR	2	
28	6B002792	HEAD LAMP BEZEL MTG BRACKET	1	
29	6B002796	HEAD LAMP BEZEL MTG BRACKET	1	
30	6B003006	LOGO SUPPORT- SILVER	1	Painted
31	B076120	HEXAGONAL EMBLEM	1	
32	6B002586	LOGO SUPPORT BRACKET	1	
33	6B002827	LOGO SUPPORT MTG. CLIP	2	

26

Print Date: 07-Apr-2022

PLATE-12
STICKERS

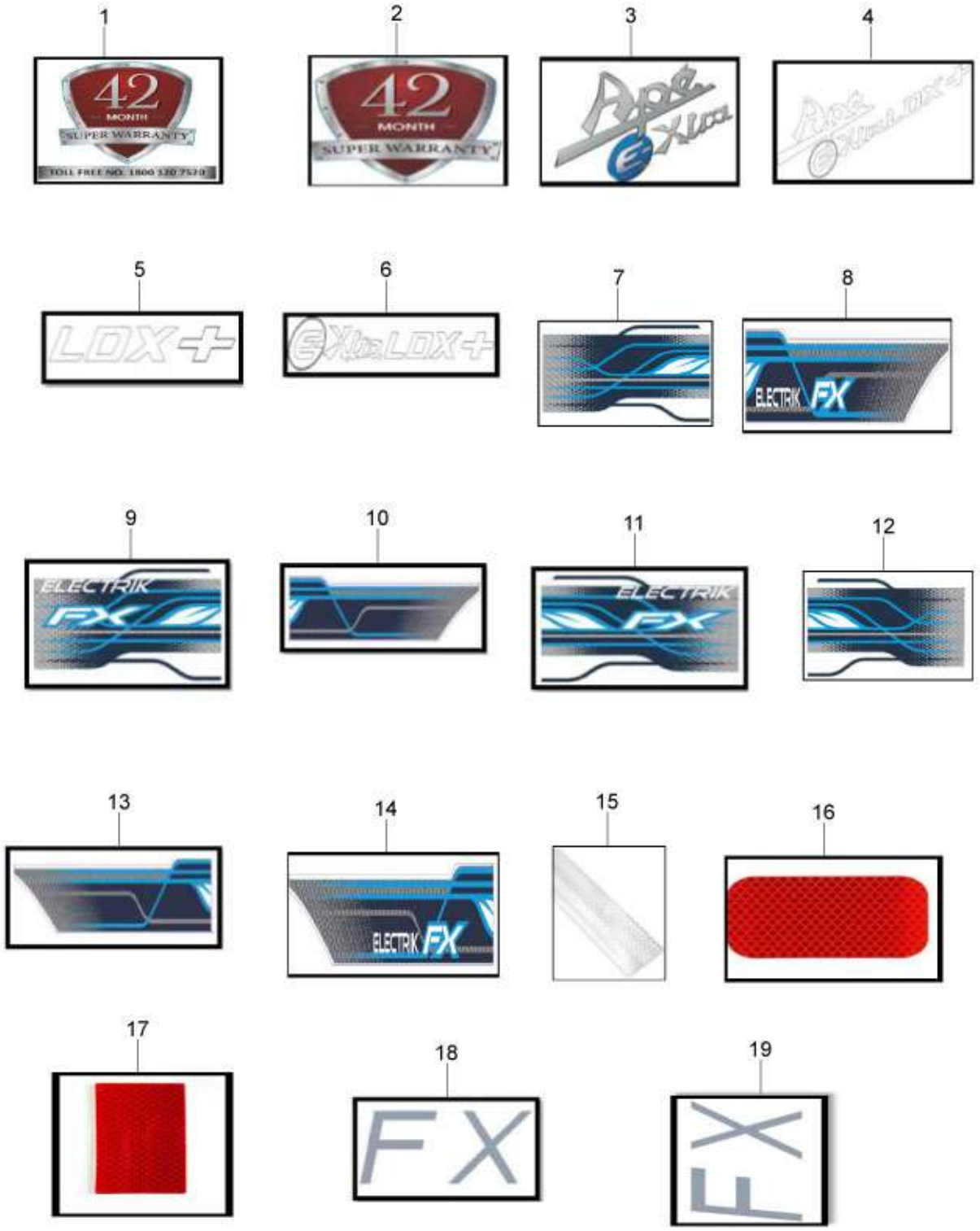
1
42
MONTH
SUPER WARRANTY
TOLL FREE NO. 1800 120 7570
2
42
MONTH
SUPER WARRANTY
3
4
5
LDX+
6
LDX+
7
8
ELECTRIK FX
9
ELECTRIK
FX
10
11
ELECTRIK
FX
12
13
14
ELECTRIK FX
15
16
17
18
FX
19
FX

27

Print Date: 07-Apr-2022

PLATE-12
STICKERS

Fig. No.	Part No.	Description	Qty	Remarks
1	6B002791	42 MONTH SUPER WARRANTY STICKER	1	
2	6B000249	42 MONTH SUPER WARRENTY STICKER	1	
3	6B002573	APE E XTRA LDX - BADGE	1	
4	6B002603	APE E-XTRA LDX PLUS BADGE	1	
5	6B002574	E XTRA LDX STICKER	1	
6	6B002604	E-XTRA LDX PLUS STICKER	1	
7	6B002565	LH DOOR DECAL	1	
8	6B002624	LH SIDE WALL DECAL (BLUE)	1	
9	6B002931	LH DOOR DECAL (FX)	1	
10	6B002937	LH SIDE WALL DECAL	1	
11	6B002932	RH DOOR DECAL (FX)	1	
12	6B002566	RH DOOR DECAL (BLUE)	1	
13	6B002938	RH SIDE WALL DECAL	1	
14	6B002625	RH SIDE WALL DECAL (BLUE)	1	
15	6B002528	WHITE REFLECTIVE TAPE	2	
16	6B002540	RED REFLECTIVE TAPE	2	
17	6B002544	RED REFLECTIVE TAPE	1	
18	6H000146	STICKER FX	1	
19	6H000159	STICKER FX	1	

28

Print Date: 07-Apr-2022

PLATE-13

Main frame Assly & Cargo Body & Mirror

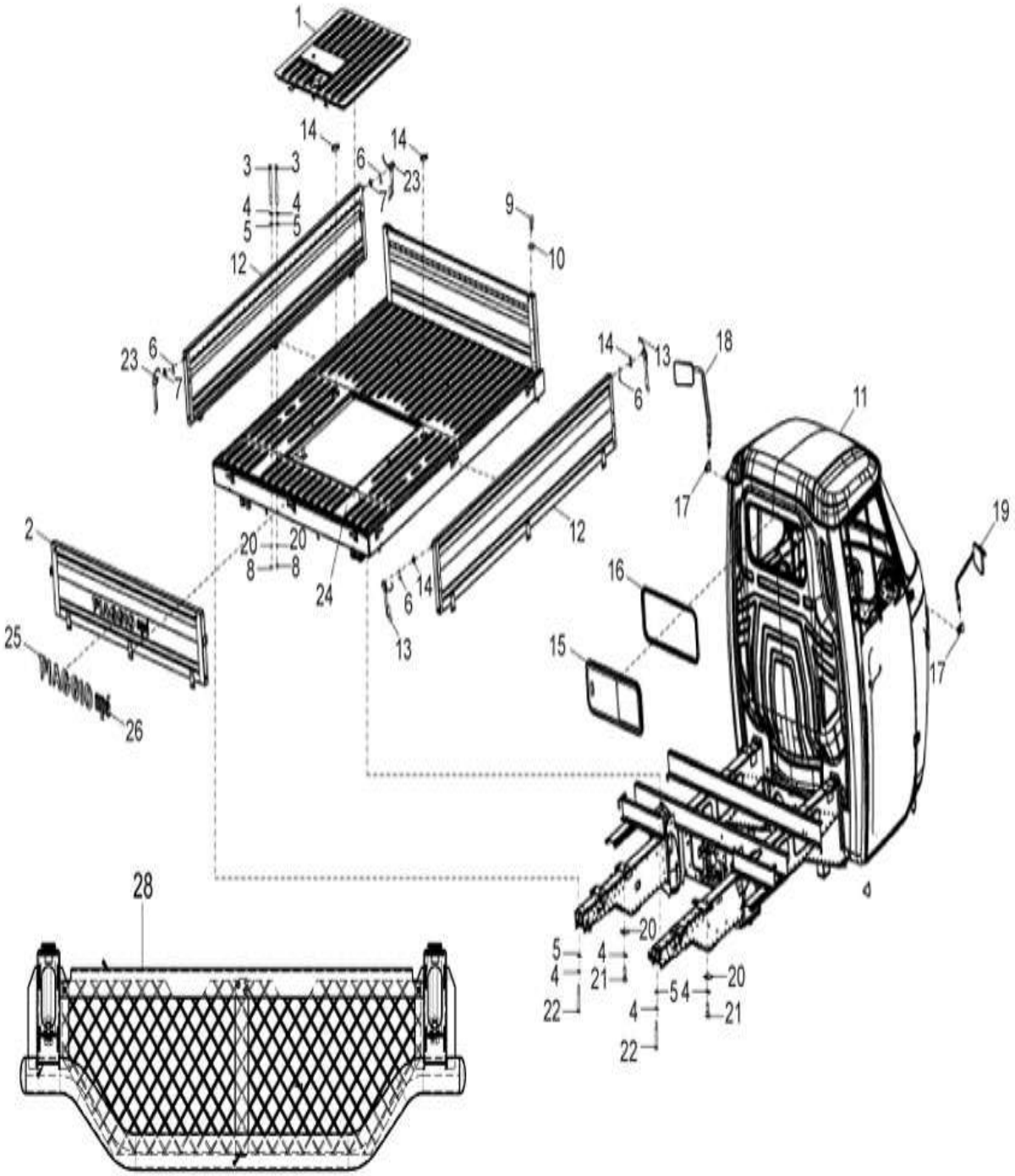
1
14
14
3
3
6
23
7
4
4
5
5
9
10
12
23
6
7
14
13
18
6
11
17
19
2
20
20
8
8
24
12
16
6
14
13
15
17
25
26
28
20
5
4
4
21
22
20
54
21
4
22

29

Print Date: 07-Apr-2022

PLATE-13

Main frame Assly & Cargo Body & Mirror

Fig. No.	Part No.	Description	Qty	Remarks
1	660207ED	ENGINE INSPECTION DOOR 501 CNG/LPG	1	
2	B042505ED	TAIL GATE PANEL DTL 501 PICK UP/LD-CED	1	LDX+
3	B076205	HEAD BOLT (M8 X 85)	2	
4	16408	SPRING WASHER M8	4	
5	808000826	PLAIN WASHER M8	4	
6	12778	SPLIT PIN 3 X 20	3	
7	3057	PL. WASHER 13 X 7 X 1	3	
8	20108	HEX NUT M8	2	
9	31089	HEX HEAD SCREW M6X18 CL 8.8	4	
10	16406	SPRING WASHER M6 OD12	4	
11	6B002620NB	MAIN FRAME WITH CABIN DOORS_E-CARGO_FX_NB	1	LDX+
11	6B002620GY	MAIN FRAME WITH CABIN DOORS_E-CARGO_FX_GY	1	LDX+
11	6B002620LB	MAIN FRAME WITH CABIN DOORS_E-CARGO_FX_LB	1	LDX+
12	6B000089ED	SIDE PANEL ASSLY (DTL) -CED	2	LDX+
13	128805ED	RH LEVER FOR CLAMPING THE SIDE PANEL CED	2	
14	3058	PLAIN WASHER 15X8.4X1.5	6	
15	6B001067	SLIDING WINDOW ASSY	1	
16	6B001073	BEADING	1	
17	643613	REAR VIEW MIRROR ATTACHMENT	2	
18	6B001495R	LEFT REAR-VIEW MIRROR (D+3)	1	
19	6B001496R	RIGHT REAR-VIEW MIRROR (D+3)	1	
20	604785	SUPPORT PLATE	4	
21	30072	HEX HEAD BOLT M8 X 35	2	
22	B076205	HEAD BOLT (M8 X 85)	2	
23	128804ED	LH LEVER FOR CLAMPING THE SIDE PANEL CED	2	
24	6B002629NB	CARGO BODY ASSLY_APE E-CARGO_FX-NB	1	LDX+
24	6B002629GY	CARGO BODY ASSLY_APE E-CARGO_FX-GY	1	LDX+
24	6B002629LB	CARGO BODY ASSLY_APE E-CARGO_FX-LB	1	LDX+
24.A	6B002782ED	PLATFORM ASSLY.APE 501 E-XTRA FX-ED	1	NI,Without Panel
24.A	6B002782GY	PLATFORM ASSLY.APE 501 E-XTRA FX-GY	1	NI,Without Panel
24.A	6B002782LB	PLATFORM ASSLY.APE 501 E-XTRA FX-LB	1	NI,Without Panel
24.A	6B002782NB	PLATFORM ASSLY.APE 501 E-XTRA FX-NB	1	NI,Without Panel
25	662323	PIAGGIO TAIL GATE (YESHSHREE) STICKER FOR LIGHT COLOUR SHADE	1	Not Appicable
26	660175	APE STICKER FOR ROLLED BACK PANEL-RED	1	Not Appicable
27	661262	YELLOW REFLECTIVE TAPE	1	NI

30

Print Date: 07-Apr-2022

PLATE-13

Main frame Assly & Cargo Body & Mirror

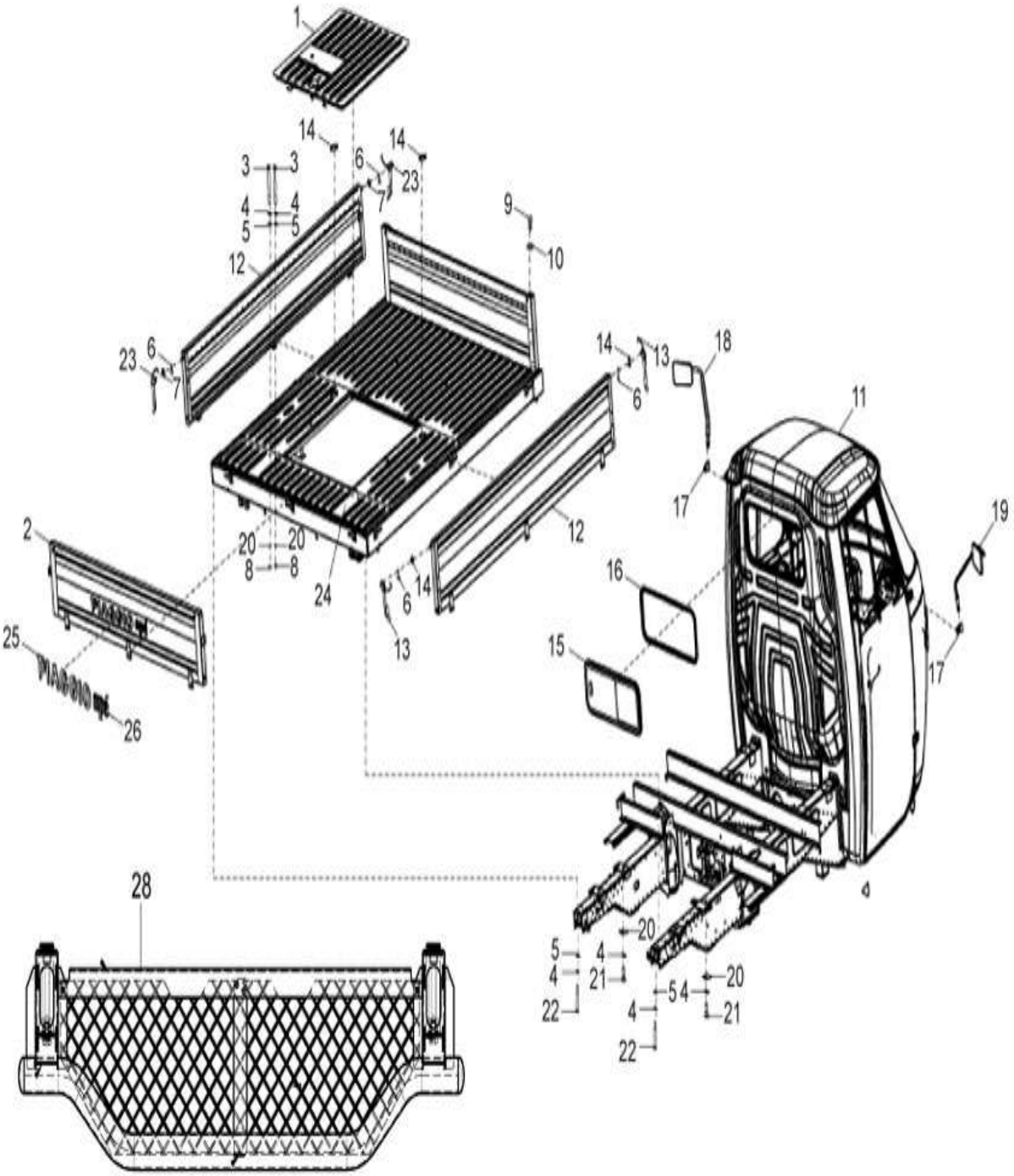
1
14
14
3
3
6
23
7
4
4
5
5
9
10
12
23
6
7
14
13
18
6
11
17
19
2
20
20
8
8
24
12
16
6
14
13
25
15
17
26
28
20
5
4
4
21
20
54
22
21
4
22

31

Print Date: 07-Apr-2022

PLATE-13

Main frame Assly & Cargo Body & Mirror

Fig. No.	Part No.	Description	Qty	Remarks
28	6B001146	REAR VISUAL BARRIER ASSLY	1	LDX+
29	12540	SPRING WASHER M8	2	NI Faster for Rear visual Barrier
30	3058	PLAIN WASHER 15X8.4X1.5	2	NI Faster for Rear visual Barrier
31	31116	HEX HD. SCREW M8X16	2	NI Faster for Rear visual Barrier

32

Print Date: 07-Apr-2022

PLATE-14
DOORS, TOOLS AND WHEELS

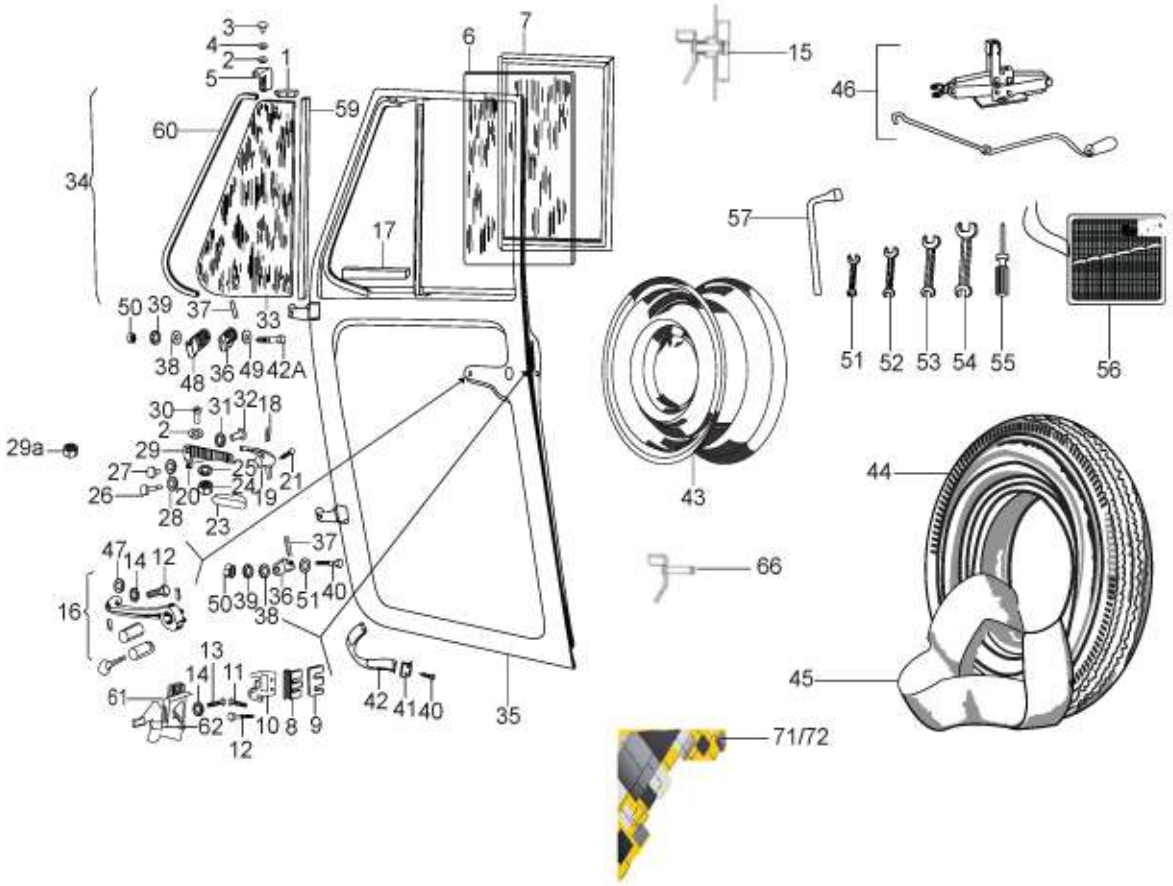
3
4
2
5
1
6
7
15
46
59
60
34
17
57
50 39 37 33
38 48 36 49 42A
51 52 53 54 55
56
30 31 32 18
2
29a
29
27 25 21
26 20 24 19
28 23
43
44
47 14 12
37
16
50 39 36 51 40
38
66
13
14 11
61
62 10 8 9
42 41 40
35
45
12
71/72

33

Print Date: 07-Apr-2022

PLATE-14

DOORS, TOOLS AND WHEELS

Fig. No.	Part No.	Description	Qty	Remarks
1	183077	UPPER PACKING R.H. DOOR RABBET	1	
1	163660	DEFLECTOR PANE RABBET L.H. UPPER PACKING	1	
2	97756	METALLIC PLAIN WASHER	4	
2	6965	SPRING WASHER DIA 5	2	
3	5745	RIVET DIA.7MM	2	
4	6078	PLAIN WASHER 12 X 5.2 X 1	2	
5	108800	UPPER CLAMP OF RIGHT AIR DEFLECTOR	1	
5	152025	UPPER CLAMP OF L.H. AIR REFLECTOR	1	
6	163661	FIXED GLASS FOR THE WINDOW	2	
7	163663	GASKET, WINDOW GLASS	2	
8	140603	SECURITY LOCK CYLINDER (SHIM PLATE)1.0TH	2	
9	193724	PLATE(OPTION SHIM PLATE)	2	
10	182663	BLOCK COMPLETE OF COLLISION DOOR LOCK LH	1	
10	182662	BLOCK COMPLETE OF COLLISION DOOR LOCK RH	1	
11	569156	CSK SCREW (BLOCK CLOSING DOOR)	2	
12	569157	CSK SCREW (BLOCK CLOSING DOOR)	2	
13	30242	SLOT CH. HD. SCREW	3	
14	12546	PLAIN WASHER / MULTI TOOTH LOCK WASHER M5	8	
15	182660R	COMPLETE LOCK OF RH DOOR	1	
15	182661R	COMPLETE LOCK OF LH DOOR	1	
16	B024733	HANDLE WITH PUSH BUTTON LH WITH KEY	1	
16	B024734	HANDLE WITH PUSH BUTTON RH WITH KEY	1	
17	163659	DEFLECTOR PANE RABBET LOWER GASKET	2	
18	8808	SPRING PIN 2.5 X 14	2	
19	B003864	DEFL CLOSING LEVER RH -(PLASTIC)	1	
19	B003865	DEFL CLOSING LEVER LH (PLASTIC)	1	
20	116971	RUBBER GROMMET	2	
21	15727	PAN SELF TAPPING SCREW	2	
22	62961	MAIN SPRING FOR LEVER	2	
23	B042814	COLLISION FOR LEVER	2	
23A	97756	METALLIC PLAIN WASHER	2	
24	20108	HEX NUT M8	2	
25	64263	WINDOW FRICTION WASHER	2	
26	604558	PIVOT FOR LEVER FOR CLOSING DOORS	2	
27	108804	SCREW WITH WIDE HEAD (MALE)	4	

34

Print Date: 07-Apr-2022

PLATE-14
DOORS, TOOLS AND WHEELS

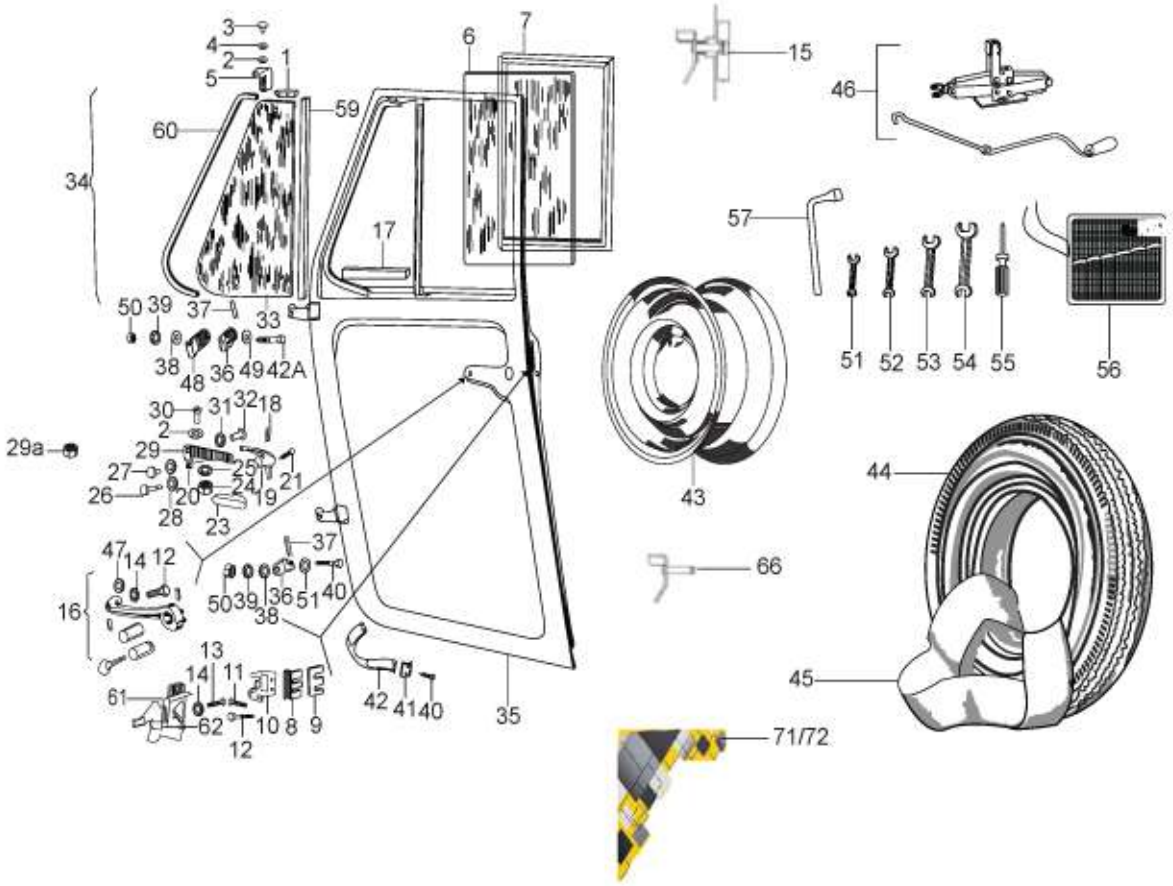
3
4
2
5
1
6
7
15
46
59
60
34
17
57
50 39 37 33
38 48 36 49 42A
51 52 53 54 55
56
30 31 32 18
2
29a
29
27 25 21
26 20 24 19
28 23
43
44
47 14 12
37
16
50 39 36 51 40
38
66
13
14 11
61
62 10 8 9
12
42 41 40
35
45
71/72

35

Print Date: 07-Apr-2022

PLATE-14

DOORS, TOOLS AND WHEELS

Fig. No.	Part No.	Description	Qty	Remarks
28	13935	WASHER	2	
29	108801	LOWER BKT.FOR CONNECTING R.H.DEFLECTOR	1	
29	109263	LOWER BKT.FOR CONNECTION L.H. DEFLECTOR	1	
29A	12136	NUT / NYLOCK NUT M5	2	
30	31058	HEX HEAD SCREW M5 X 16 CC8.8	2	
31	6177	PLAIN WASHER 16 X 8.5 X 1	1	
32	108805	SCREW WITH WIDE HEAD (FEMALE)	2	
32	604812	LARGE HEAD SCREW	2	
33	163665	GLASS, VENT	2	
34	163666SP	RH; VENT WINDOW ASSY.	1	
34	163667SP	LH; VENT WINDOW ASSY.	1	
35	B002847	RH DOOR SUB ASSLY (CED)	1	
35	B002848	LH DOOR SUB ASSLY (CED)	1	
36	632238	DOOR HINGE ASSLY UPPER	4	
37	8847	SPRING PIN 6X64	4	
38	13812	METALLIC PLAIN WASHER	2	
38	13861	PLAIN WASHER 20X8.2X2.5	2	
39	12540	SPRING WASHER M8	4	
40	8451	PAN SELF TP SCREW 6 SGX13 AB	8	
41	89281	BLOCK PLATE STRAP	4	
42	B074173	STOP BELT FOR DOOR	1	
42A	568692	PAN SELF TAP SCREW 6SG X 16AB	4	
43	644973R	WHEEL RIM ASSY.	1	
44	587971	TYRE 4.50 X 10 8 PR	1	
45	151924	INNER TUBE TYRE 4.5 X 10 INCH	4	
46	B001954R	JACK ASSEMBLY COMPONENT	1	
47	6018	PL. WASHER	2	
47A	604560	SCREW TERMINAL ASSY. - GEAR CONTROL	2	
48	605389	HINGE	2	
49	140728	PLAIN WASHER 8.5 X 24 X 3	2	
50	20108	HEX NUT M8	4	
51	567454	DOUBLE END SPANNER7/8	1	
52	567455	DE SPANNER 10X13 IS:2018(ZN PLATING)	1	
53	567456	DOUBLE END SPANNER 12/14	1	
54	567457	DE SPANNER 17/19	1	

36

Print Date: 07-Apr-2022

PLATE-14
DOORS, TOOLS AND WHEELS

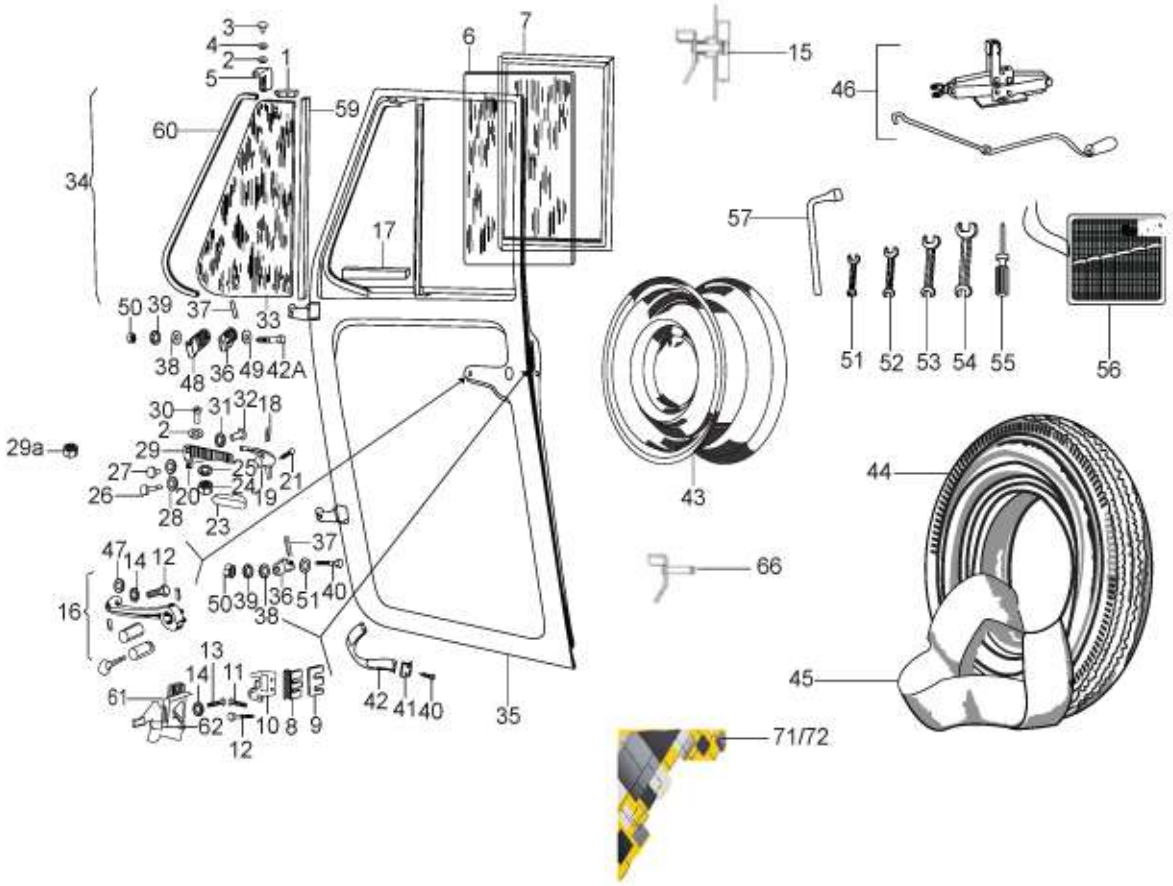
3
4
2
5
1
6
7
15
46
59
60
34
17
57
50 39 37 33
38 48 36 49 42A
51 52 53 54 55
56
30 31 32 18
2
29a
29
27 25 21
26 20 24 19
28 23
43
44
47 14 12
37
16
50 39 36 51 40
38
66
13
14 11
61
62 10 8 9
42 41 40
35
45
12
71/72

37

Print Date: 07-Apr-2022

PLATE-14

DOORS, TOOLS AND WHEELS

Fig. No.	Part No.	Description	Qty	Remarks
55	567458	SCREW DRIVER (-)&(+) 80	1	
56	604707	TOOL BAG	1	
57	567459	L TYPE WHEEL SPANNER (A/F19)	1	
58	192020017	STARTING ROPE	1	Not applicable
58	E500405518	STARTING ROPE	1	Not applicable
58A	569193	FIRST AID KIT	1	
59	163782	DEFLECTOR PANE RABBET REAR GASKET	2	
60	163784	DEFLECTOR PANE RABBET FRONT GASKET	2	
61	604689	STOPPER ASSLY RH	1	
61	604690	STOPPER ASSLY LH	1	
62	108356	SPRING FOR LOCK	1	
62	115531	SPRING FOR R.H. LOCK	1	
63	116334	L.H.DOOR GUIDE BOX ASSY	1	
64	30242	SLOT CH. HD. SCREW	3	
65	190255	GROMMET (LONG MEMBER)	1	
66	109121	LEVER COMPLETE OF LH LOCK	1	
67	116333	BOX FOR GUIDE COMPLETE OF RH DOOR	1	
68	109120	LEVER COMPLETE FOR R.H. LOCK	1	
69	B042703	TOOLS KIT (APE PAXX PETROL/CNG/LPG)	1	
70	30074	HEX HEAD BOLT M8 X 40 CL 8.8	1	
71	6B000250	DOOR DECAL LH	1	Not applicable
72	6B000251	DOOR DECAL RH	1	Not applicable

38

Print Date: 07-Apr-2022

PLATE-15
TOOLS AND WHEELS

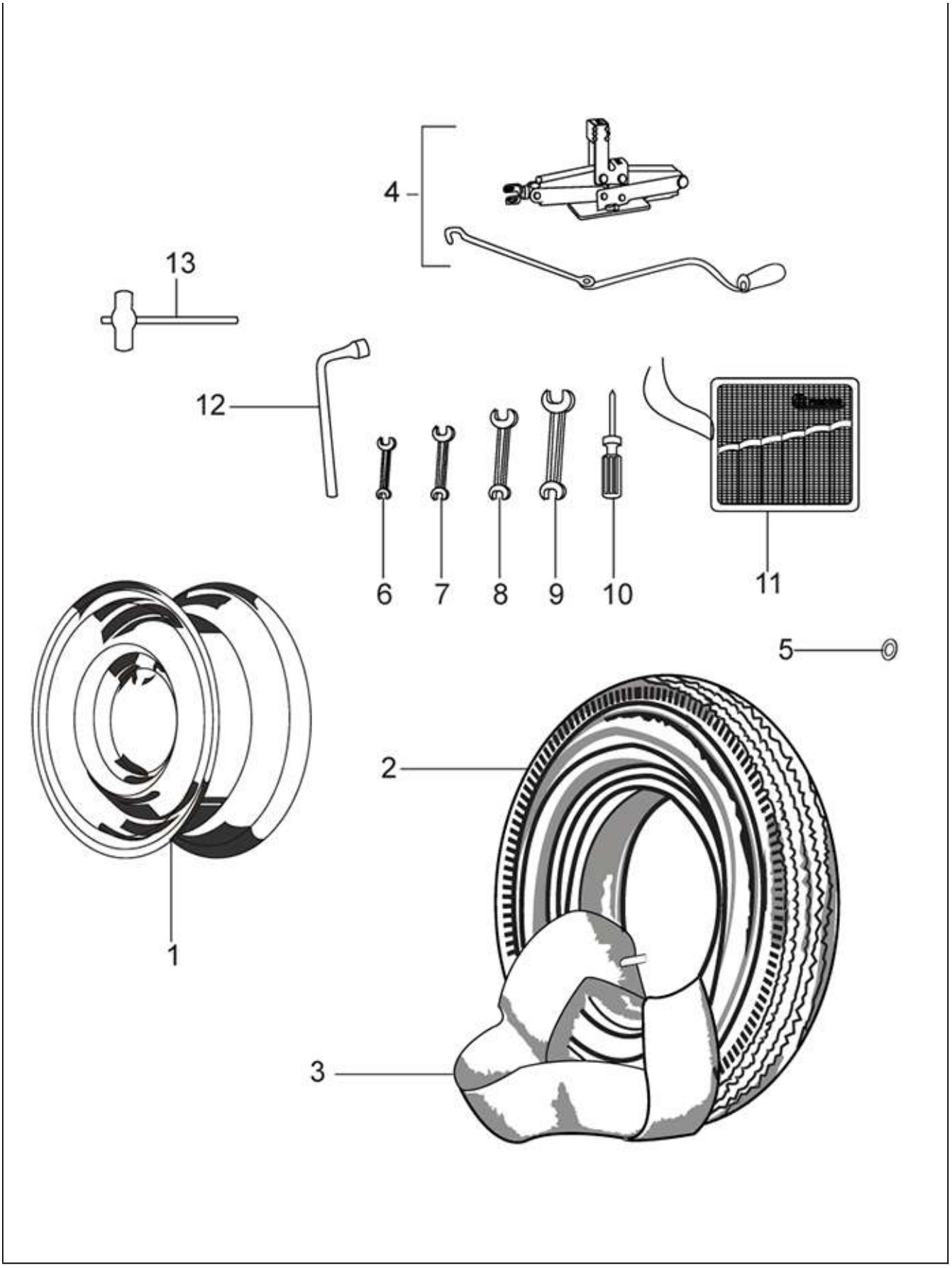
4
13
12
6
7
8
9
10
11
5
2
1
3

39

Print Date: 07-Apr-2022

PLATE-15
TOOLS AND WHEELS

Fig. No.	Part No.	Description	Qty	Remarks
1	644973R	WHEEL RIM ASSY.	1	
2	6C000664R	TYRE	1	
2	6C000655R	LOW RRC TYRE 4.5X10INCH EV-CARGO	1	Complete Assly
3	151924	INNER TUBE TYRE 4.5 X 10 INCH	4	
4	B001954R	JACK ASSEMBLY COMPONENT	1	
5	6018	PL. WASHER	2	
6	567454	DOUBLE END SPANNER7/8	1	
7	567455	DE SPANNER 10X13 IS:2018(ZN PLATING)	1	
8	567456	DOUBLE END SPANNER 12/14	1	
9	567457	DE SPANNER 17/19	1	
10	567458	SCREW DRIVER (-)&(+) 80	1	
11	604707	TOOL BAG	1	
12	567459	L TYPE WHEEL SPANNER (A/F19)	1	
13	KIT95124	APE CITY EV INSULATED & SPECIAL TOOL KIT	1	NI

40

Print Date: 07-Apr-2022

PLATE-16

Windshield /Glass/ Seats/ Carpets/Mirrors &Engine Door.

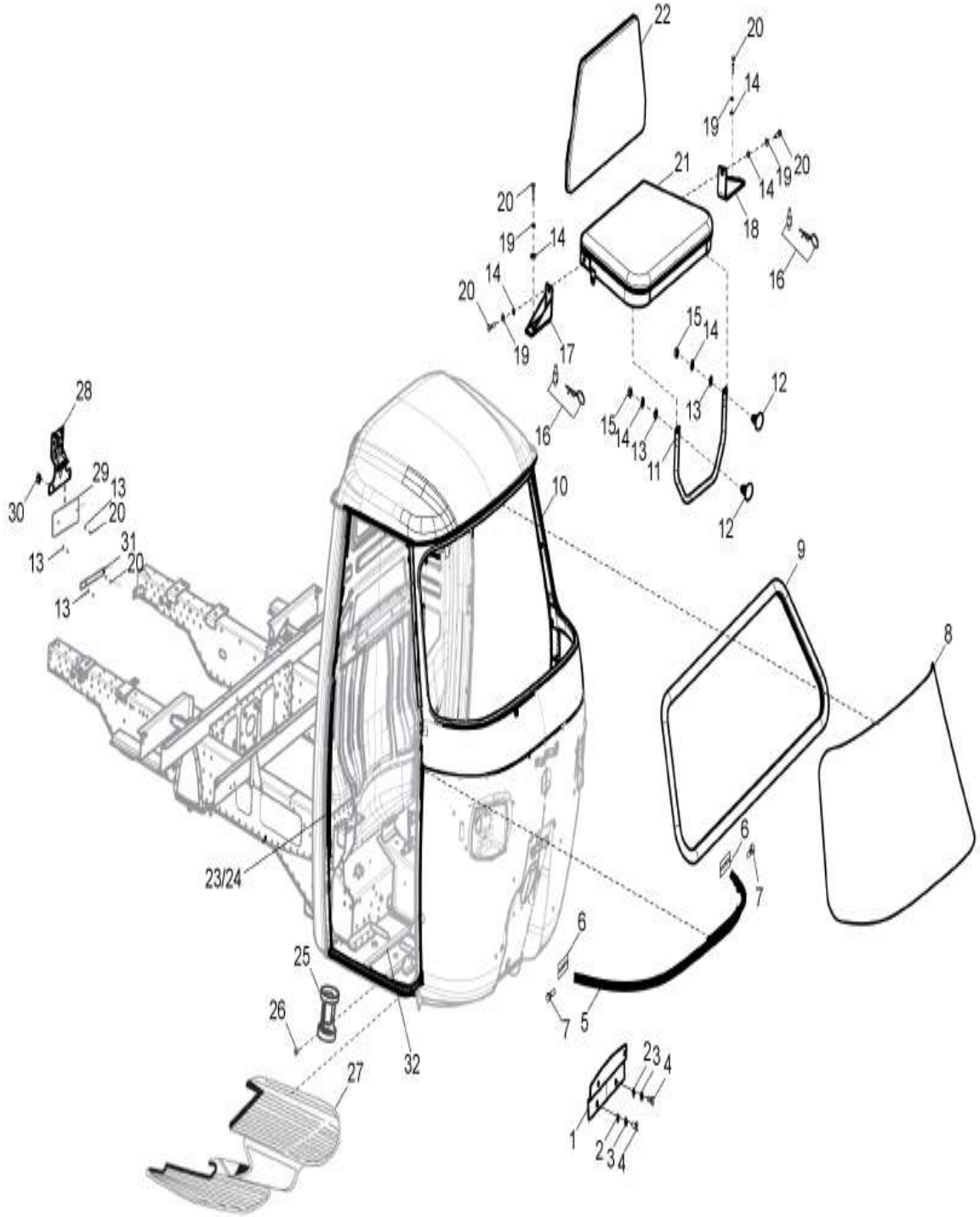
22
20
14
19
21
20
19
14
18
16
20
14
19
17
15
14
12
13
16
15
14
13
11
12
28
29
13
30
20
31
13
20
13
10
9
8
6
7
23/24
6
25
7
5
26
32
27
23
4
1
2
3
4

41

Print Date: 07-Apr-2022

PLATE-16

Windshield /Glass/ Seats/ Carpets/Mirrors &Engine Door.

Fig. No.	Part No.	Description	Qty	Remarks
1	6B001140	BRACKET ASSLY FRONT HSRP MTG	1	
2	3056	PLAIN WASHER M6 OD12	2	
3	16406	SPRING WASHER M6 OD12	2	
4	31088	HEX HD SCREW M6 X 16 CL 8.8 (811061623)	2	
5	6B001946	RIM COVER JOINT (JET BLACK)	1	
6	6B001947	TERMINAL	2	
7	15911	PAN SELF TAP SCREW 8SG X 16 AB	2	
8	6B001921	LAMINATED WINSHIELD GLASS	1	
8	587963	LAMINATED WINSHIELD GLASS	1	Appli.for old Windshield B076098ED
9	109012	WIND SHIELD PACKING	1	
10	6B000387ED	WINDSHIELD ASSLY(MODI.) - ED	1	Applicable for New Windshield Glass 6B001921
10	B076098ED	WINDSCREEN FRAME ASSLY - C/O 501 BSIV DSL	1	Appli.for old Windshield Glass 587963
11	NS	NOT SERVICEABLE	1	
12	6B001462	PLASTIC FASTENER	2	
13	3058	PLAIN WASHER 15X8.4X1.5	4	
14	16408	SPRING WASHER M8	8	
15	20108	HEX NUT M8	2	
16	6B001486	PIN WITH HOLE	2	Not Servicable
17	NS	NOT SERVICEABLE	1	
18	NS	NOT SERVICEABLE	2	
19	13958	PLAIN WASHER	4	
20	30072	HEX HEAD BOLT M8 X 35	6	
21	6B002580	DRIVER SEAT ASSLY.	1	
22	6B002578	BACKREST ASSEMBLY	1	
23	6B001204R	DOOR BEADING CARGO LH	1	
24	6B001207R	DOOR BEADING CARGO RH	1	
25	645141	BOTTLE CARRIER STAND	1	
26	660168	PAN SELF TP. SCREW 10 SGX13AB	2	
27	6B002763	FRONT CARPET	1	
28	6B001118	BRACKET ASSLY-REAR HSRP MTG	1	
29	6B001129	REGISTRATION NUMBER PLATE(HSRP)	1	
30	261323	NUT	2	
31	6B001140	BRACKET ASSLY FRONT HSRP MTG	1	
32	B074150PC	CABIN FLOOR SUB-ASSY-PC	1	

42

Print Date: 07-Apr-2022

PLATE-17
WINDSCREEN WIPER

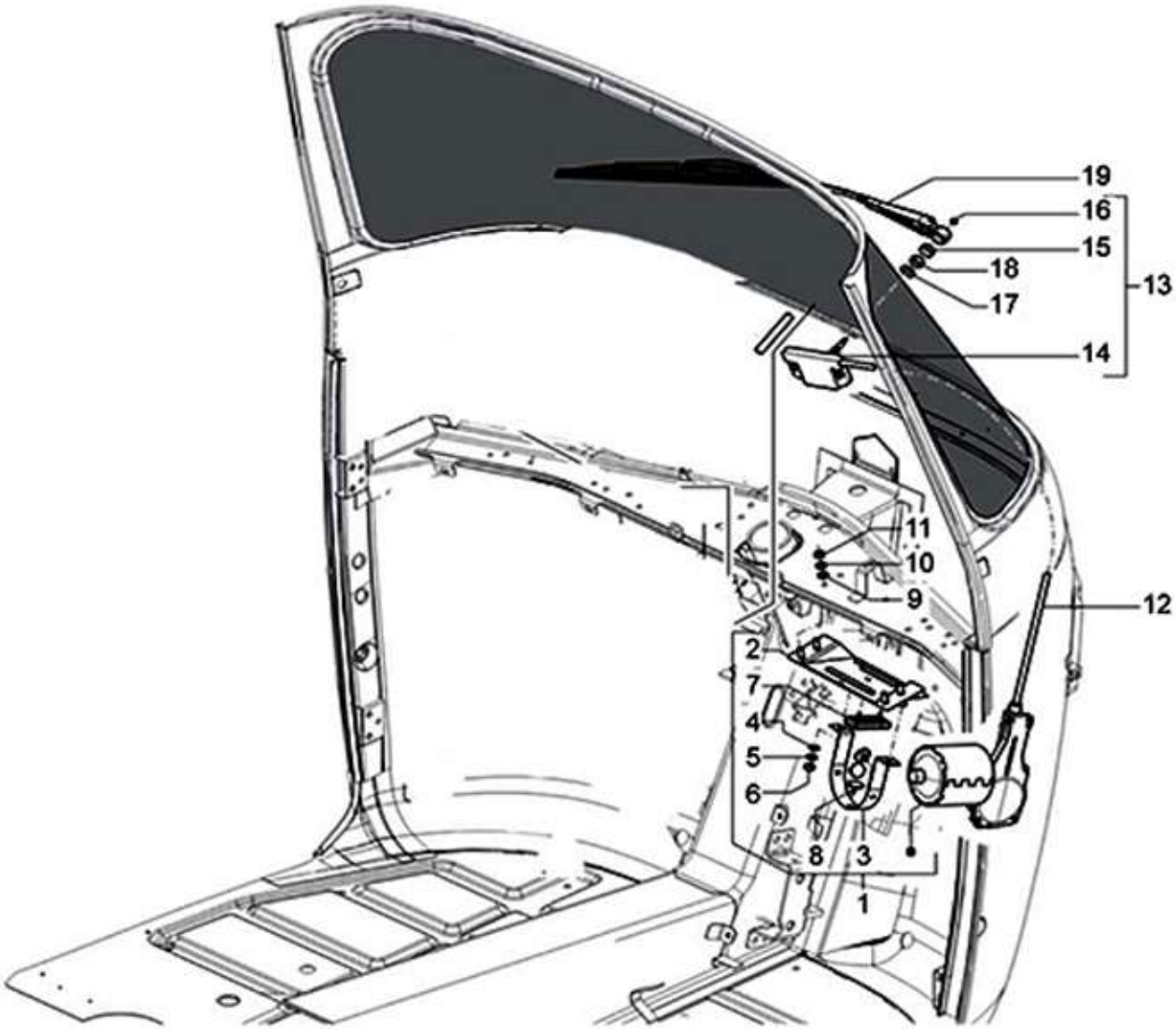
19
16
15
18
17
13
14
11
10
9
12
2
7
4
5
6
8
3
1

43

Print Date: 07-Apr-2022

PLATE-17
WINDSCREEN WIPER

Fig. No.	Part No.	Description	Qty	Remarks
1	6D000837	WIPER MOTOR ASSY. WITH MTG. BKT. (N.I.)	1	
2	569166	WIPER MOTOR MOUNTING BRACKET	1	
3	569177	STRAP ASSY FOR WIPER MOTOR (N.I.)	1	
4	16406	SPRING WASHER M6 OD12	2	
5	3056	PLAIN WASHER M6 OD12	2	
6	20106	HEX NUT M6	2	
7	569178	RUBBER PAD FOR WIPER MOTO (N.I.)	1	
8	925571	CABLE RACK (033200/PGO)	1	NI
9	3056	PLAIN WASHER M6 OD12	4	
10	16406	SPRING WASHER M6 OD12	4	
11	20106	HEX NUT M6	4	
12	B076303	BUNDY TUBE (MOTOR TO WHEEL BOX)	1	
12A	604506	BUNDY TUBE OUTER	1	
13	B076304	WHEEL BOX ASSY. (MOD.)	1	
14	NS	NOT SERVICEABLE	1	
15	NS	NOT SERVICEABLE	1	
16	569165	DOME NUT	1	
17	6173	METALLIC PLAIN WASHER (808001026)	1	
18	20106	HEX NUT M6	1	
19	632292	WIPER ARM & BLADE ASSY	1	

44

Print Date: 07-Apr-2022

PLATE-18

SELECTORS - SWITCHES - BUTTONS

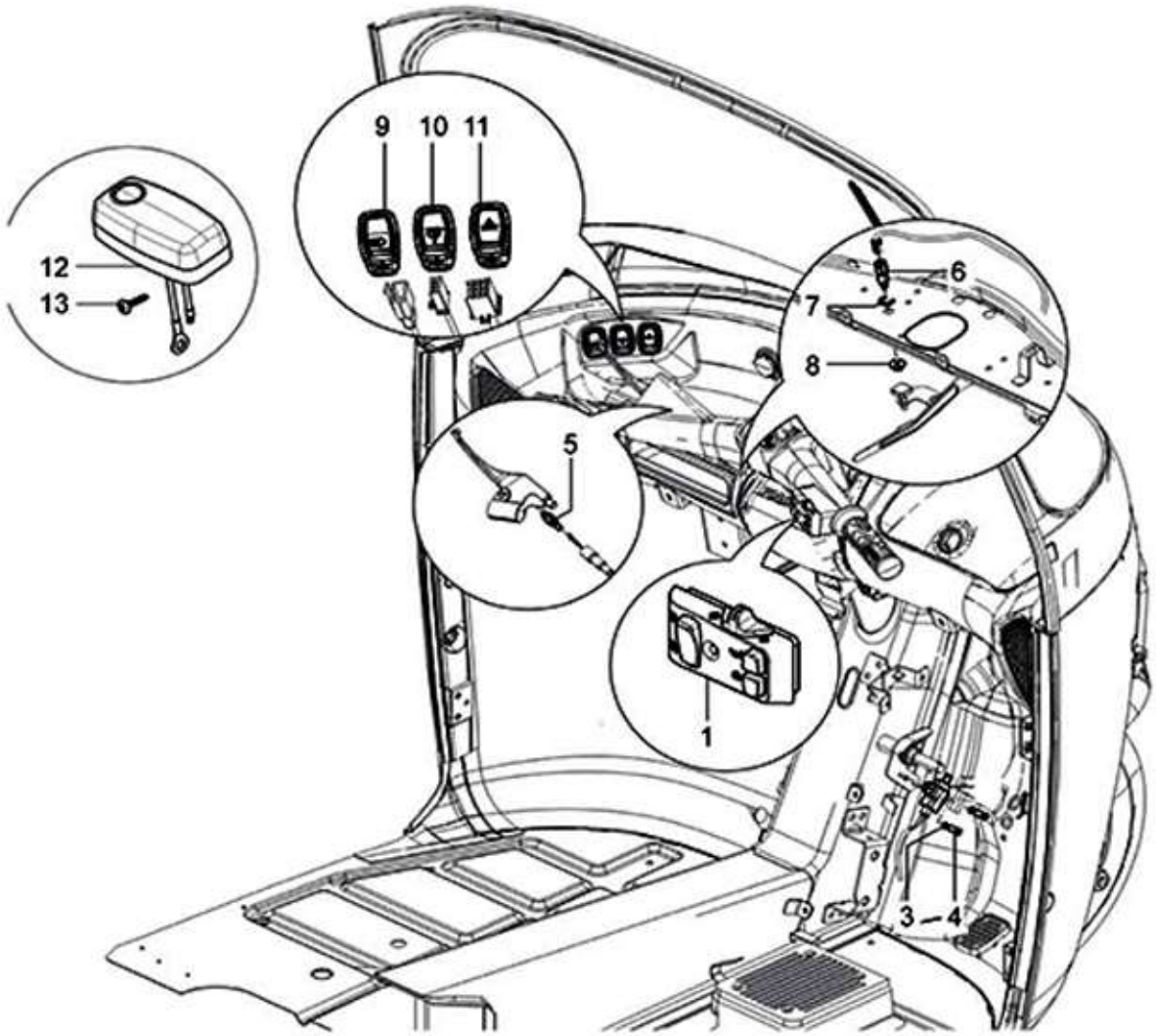
9
10
11
12
13
6
7
8
5
1
3
4

45

Print Date: 07-Apr-2022

PLATE-18

SELECTORS - SWITCHES - BUTTONS

Fig. No.	Part No.	Description	Qty	Remarks
1	B073366R	HANDLE BAR SWITCH ASSLY-NEW	1	
2	567498R	BRAKE/REVERSE LIGHT SW (INTEGRAL CAP)-PAV	1	
3	3054	PLAIN WASHER	2	
4	B074568	SCREW TERMINAL	2	
5	642032	PUSH BUTTON-CLUTCH	1	
6	640762	PUSH BUTTON REVERSE	1	
7	5969	CIRCLIP DIA 9 E TYPE	1	
8	B076448	BUSH REVERSE SWITCH MTG.	1	
9	B073478R	SWITCH 3 POSITION	1	
10	B073479R	WIPER MOTOR SWITCH/ SWITCH WIPER MOTOR	1	
11	B073481R	HAZARD WARNING SWITCH WITH CROWN CAP (12V)(VE)	1	
12	B073715	CABIN LAMP	1	
13	15727	PAN SELF TAPPING SCREW	2	

46

Print Date: 07-Apr-2022

PLATE-19

STEERING COLUMN & FRONT SUSPENSION

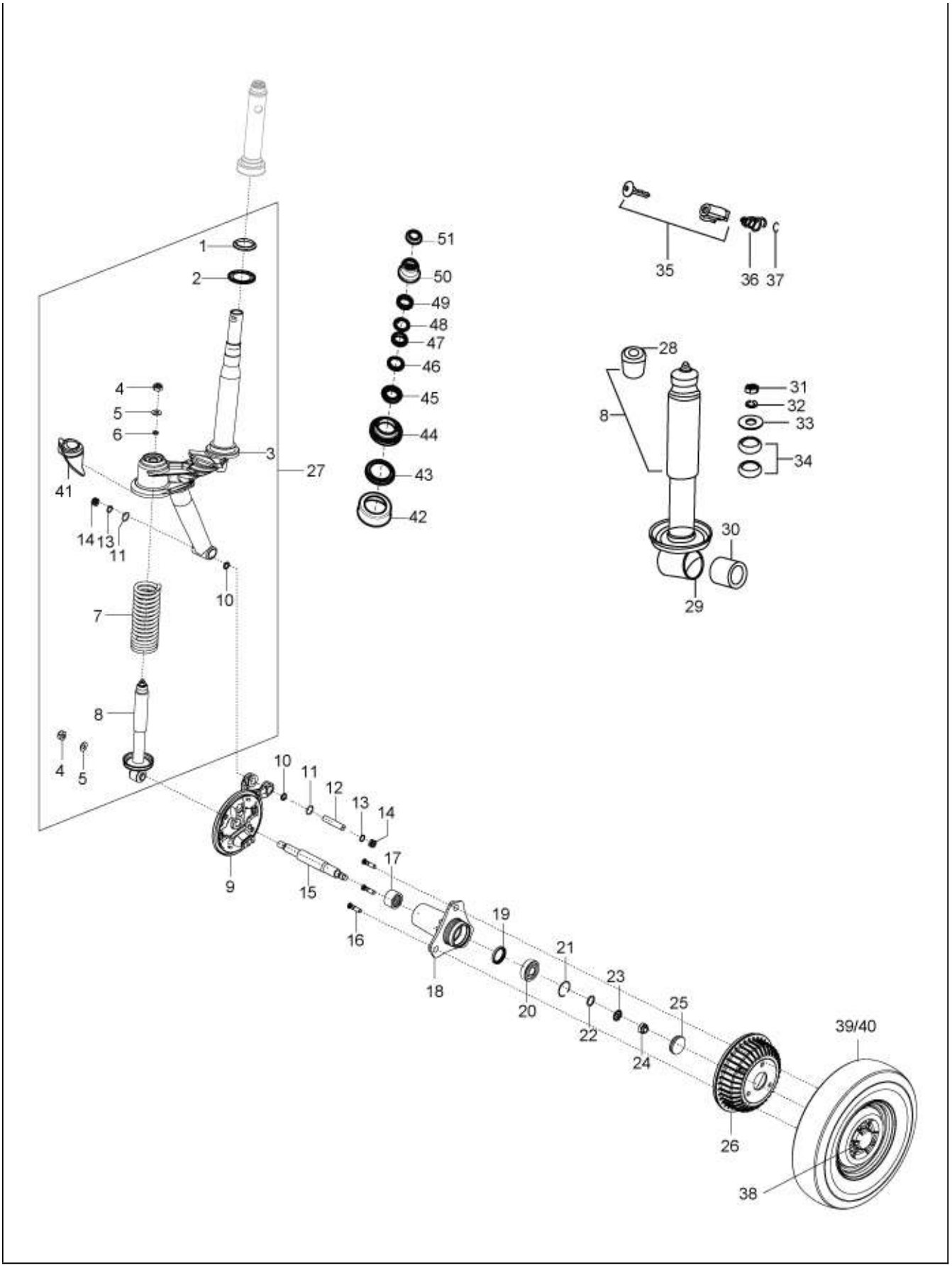
1
2
3
4
5
6
7
8
9
10
11
12
13
14
15
16
17
18
19
20
21
22
23
24
25
26
27
28
29
30
31
32
33
34
35
36
37
38
39/40
41
42
43
44
45
46
47
48
49
50
51

47

Print Date: 07-Apr-2022

PLATE-19

STEERING COLUMN & FRONT SUSPENSION

Fig. No.	Part No.	Description	Qty	Remarks
1	567993	BEARING RACE LOWER BOTTOM	1	
2	109066	WASHER WITH PROTECTION FOR BEARING	1	
3	B076859	STEERING COLUMN WITH I.P. (501 STD)	1	Bare COLUMN
3	6C000475SP	STEERING COLUMN WITH BKT WITH CARRIER _SPD	1	STEERING COLUMN WITH BKT Wheel CARRIER
4	568095	NYLOCK NUT	2	
5	87067	PLAIN WASHER 30.5X14.3X2	2	
6	16410	SPRING WASHER	1	
7	616931	FRONT SUSPENSION SPRING	1	
8	632719	SHOCK ABSORBER , FR TYPE	1	
9	6C000275	BRACKET WHEEL CARRIER WITH PI	1	
10	8771	OIL SEAL (18-24-4)	2	
11	6733	O RING	2	
12	137235	STEERING PIN	1	
13	150579	RING FOR HOLDING TYPE J F101 17A	2	
14	107718	ROLLER BUSH	2	
15	643772R	FRONT WHEEL AXLE	1	
16	652520	BOLT FOR AXLE M12 X 40 (VE WHEEL RIM)	3	
17	125289	NEEDLE BEARING, CRANKASE, FRONT WHEEL	1	
18	652521	FR. WHEEL HUB ASSY.	1	
19	136434	OIL SEAL	1	
20	30209R	BALL BEARING FRONT WHEEL HUB	1	
21	107870	ELASTIC RING	1	
22	567473	CIRCLIP DIA. 42 INT. (841004203)	1	
23	180431	COIN WASHER	1	
24	74521	NUT M14 X 1.5	1	
25	107871	CAP	1	
26	152580	BRAKE DRUM APE - 501	1	
27	6C000473SP	FRONT SUSPENSION ASSEMBLY XTRA LD STD	1	Consist. Of Sus.assy,Brake Assy.& Brake drum
28	75708	SILENT BLOCK	1	
29	107732	BUSH FOR SILENT BLOCK	1	
30	566545	RUBBER BUSH (FRT SHOCK ABSORBER) - MODIFIED	1	
31	20110	HEX NUT M10	1	
32	16410	SPRING WASHER	1	
33	6066	PL WASHER 10.5X38X9	1	
34	74414	RUBBER BUSH/BUFFER FOR COUPLING SHOCK ABSORBE	1	

48

Print Date: 07-Apr-2022

PLATE-19

STEERING COLUMN & FRONT SUSPENSION

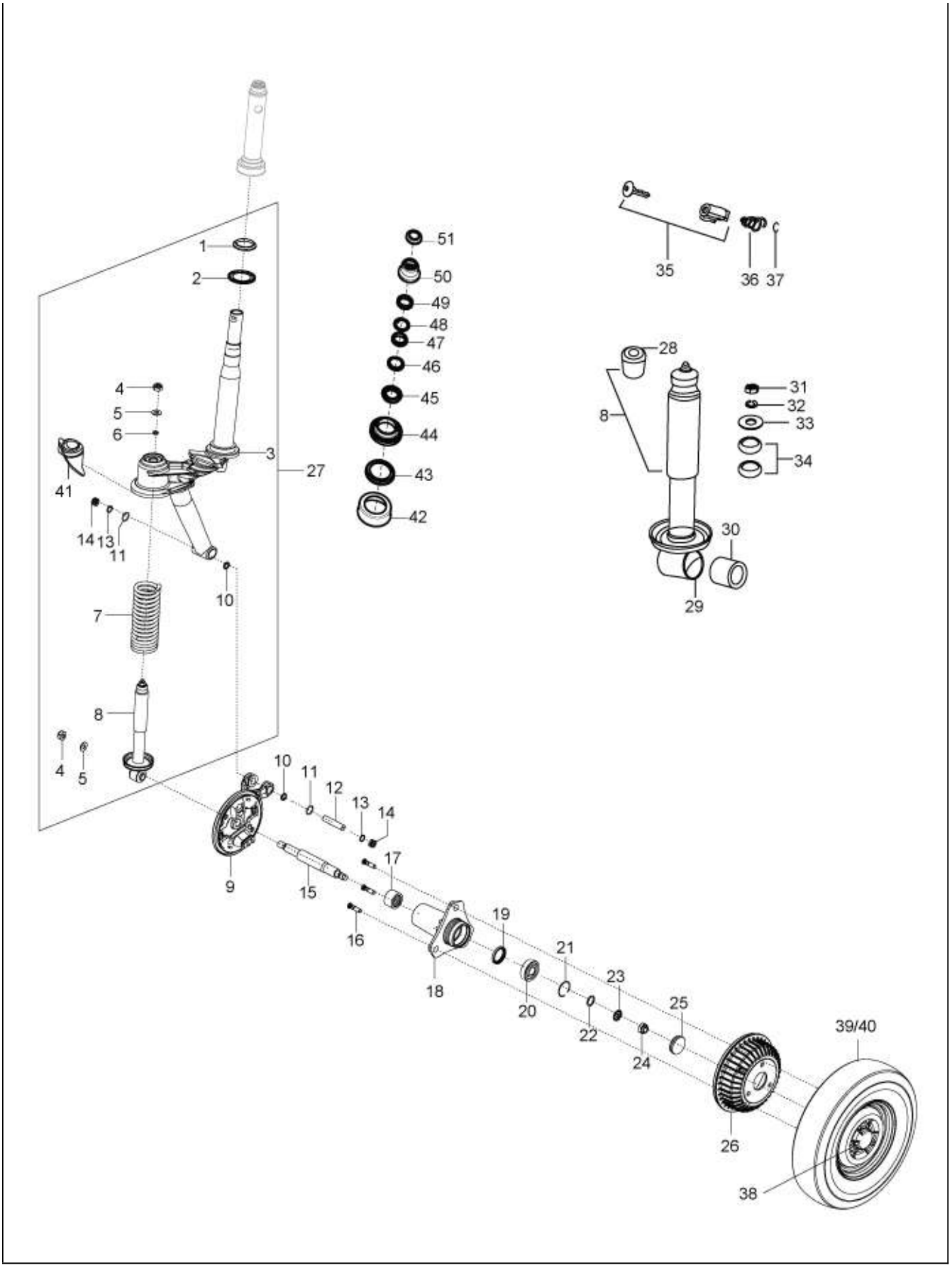
1
2
3
4
5
6
7
8
9
10
11
12
13
14
15
16
17
18
19
20
21
22
23
24
25
26
27
28
29
30
31
32
33
34
35
36
37
38
39/40
41
42
43
44
45
46
47
48
49
50
51

49

Print Date: 07-Apr-2022

PLATE-19

STEERING COLUMN & FRONT SUSPENSION

Fig. No.	Part No.	Description	Qty	Remarks
35	B001561	STG LOCK ASSLY WITH KEY	1	
36	569150	SPRING; STEERING LOCK (MODIFIED)	1	
37	661231	CIRCLIP STEERING LOCK DIA 16 (INT)	1	(Qty. front & Rear)
38	644973R	WHEEL RIM ASSY.	3	(Qty. front & Rear)
39	587971	TYRE 4.50 X 10 8 PR	3	(Qty. front & Rear)
40	151924	INNER TUBE TYRE 4.5 X 10 INCH	3	
41	109265	SPLASH GUARD DUST COVER	1	
42	109064	DUST COVER	1	
43	6C000191	LOWER BALL CAGE (VE)	1	
44	567992	BEARING RACE LOWER TOP	1	
45	567990	BEARING RACE UPPER BOTTOM	1	
46	6C000190	UPPER BALL CAGE (VE)	1	
47	567991	BEARING RACE UPPER TOP	1	
48	108873	STOP WASHER FOR HOLDING	1	
49	108874	SECURING RING NUT	1	
50	604758	PROTECTION	1	
51	604759	RUBBER CAP STEERING COLUMN (N.I.)	1	NI
52	KIT96033R	MODIFIED BALL KIT FOR 3WH (WHITE)	1	NI
53	KIT95021R	STEERING CONE SET (UPPER)	1	NI
54	KIT95022R	STEERING CONE SET (LOWER)	1	NI
55	KIT96016R	KIT OF STEERING CONE & BALL KIT	1	NI
56	KIT940003R	STEERING PIN KIT WITH O RING	1	

50

Print Date: 07-Apr-2022

PLATE-20

REAR SUSPENSION - SHOCK ABSORBER/S & ENGINE SUPPORT

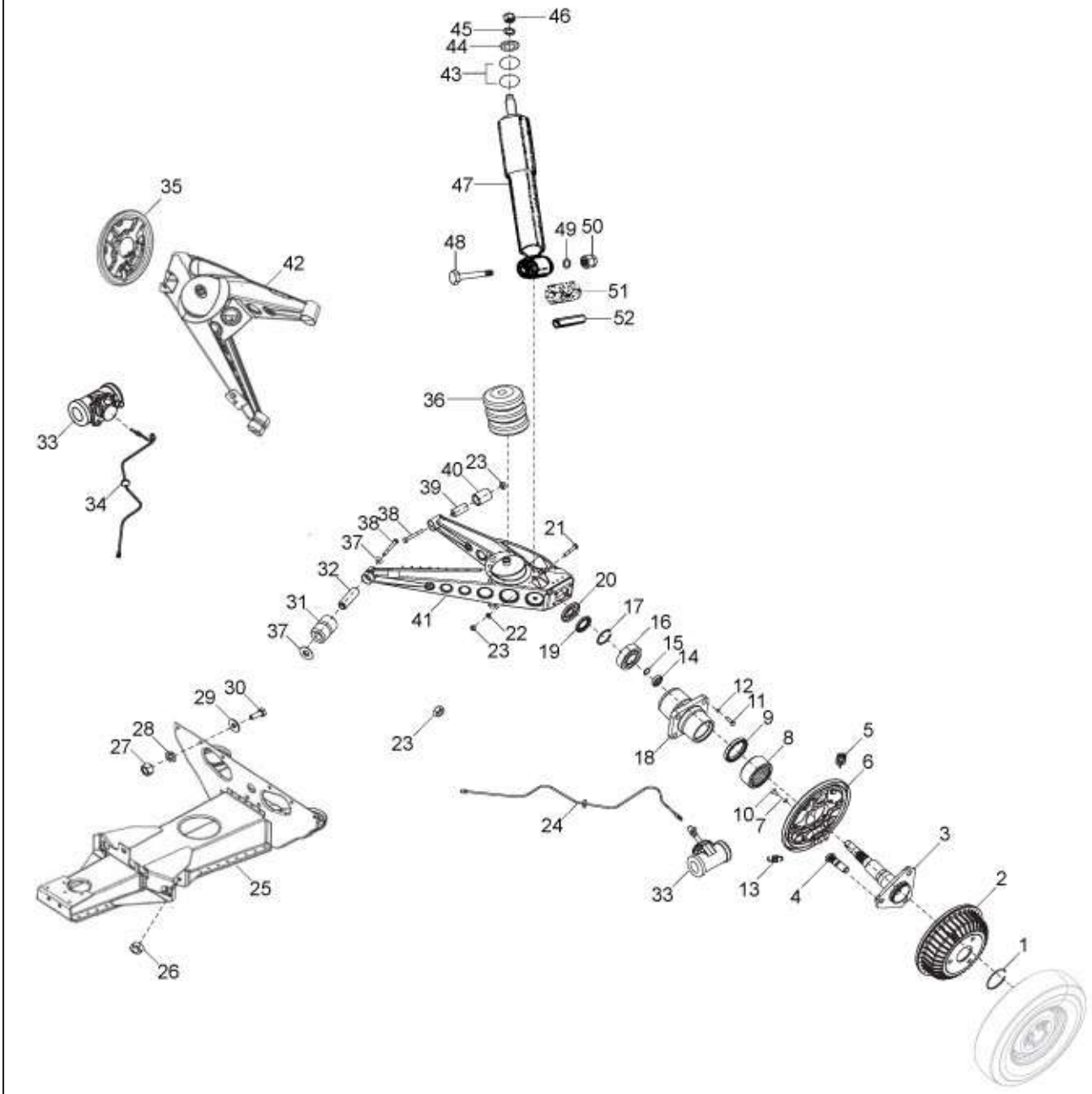
46
45
44
43
47
35
49
50
48
42
51
52
36
33
40
23
39
34
38
38
37
21
32
20
31
41
17
16
37
22
23
19
15
14
12
29
30
11
9
28
27
23
18
8
5
6
10
7
24
3
25
33
13
4
2
1
26

51

Print Date: 07-Apr-2022

PLATE-20

REAR SUSPENSION - SHOCK ABSORBER/S & ENGINE SUPPORT

Fig. No.	Part No.	Description	Qty	Remarks
1	107870	ELASTIC RING	2	
2	152580	BRAKE DRUM APE - 501	2	
3	6C000576	WHEEL AXLE	2	
4	652520	BOLT FOR AXLE M12 X 40 (VE WHEEL RIM)	6	
5	602497	JAWS STOP SPRINGS	2	
6	6C000279	JAW-SUPPORT DISK FOR RIGHT WHEEL WITH AS	1	
7	12536	SPRING WASHER	4	
8	661282	NEEDLE ROLLER BEARING	2	
9	20359	SEAL RING	1	
10	63440	BOLT M6X12	4	
11	31159	HEX HD SCREW M10 X 35 CC 8.8	4	
12	16410	SPRING WASHER	4	
13	116088	SPRING SUPPORTING JAWS	2	
14	661267	RING	2	
15	137026	SPRING RING	2	
16	243303R	DEEP GROVE BALL BRG-RR WH AXLE	1	
17	6650	CIRCLIP DIA 50 (INT)	2	
18	6C000662	REAR WHEEL HUB	2	
19	196302	OIL SEAL	2	
20	109892	PROTECTION CUP RR HUB	2	
21	267068	HEX HEAD BOLT M10 X 60 CC 10.9	4	
22	286328	PLAIN WASHER 20X10.2X2	4	
23	231370	SELF BREAKING NUT M10	12	
24	644813	BRAKE PUMP TUBE OF LEFT REAR WHEEL	1	
25	6C000583	FRAME ASSY. SUSPENSION & ENGINE SUPPORT	1	
26	231370	SELF BREAKING NUT M10	2	
27	15335	HEX HD NUT M8	6	
28	16408	SPRING WASHER M8	6	
29	116831	PLAIN METALLIC WASHER (826000828)	6	
30	31119	HEX HD SCREW M8 X 25	6	
31	226596	BUSH FRONT RING FOR ELASTIC SUPPORT	2	
32	267065	SPACER FRONT	2	
33	632148	WHEEL CYLINDER ASSY. FRONT DIA. (25.4 MM)	2	
34	644812	BRAKE PUMP TUBE OF RIGHT REAR WHEEL	1	
35	6C000279	JAW-SUPPORT DISK FOR RIGHT WHEEL WITH AS	1	

52

Print Date: 07-Apr-2022

PLATE-20

REAR SUSPENSION - SHOCK ABSORBER/S & ENGINE SUPPORT

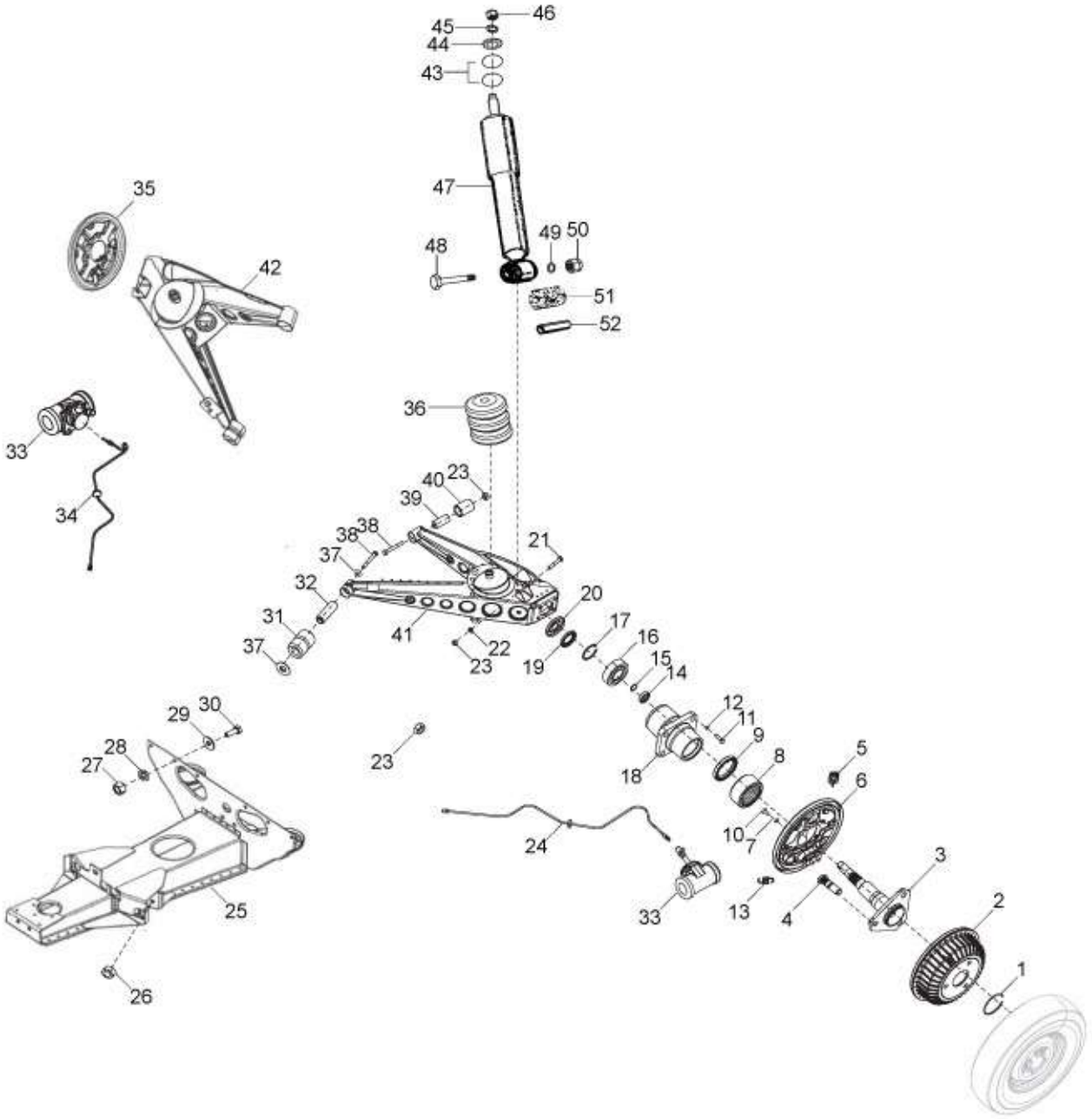
46
45
44
43
47
35
49
50
48
42
51
52
36
33
40
23
39
34
38
38
37
21
32
20
31
41
17
37
22
16
23
19
15
14
12
29
30
11
9
28
27
23
8
5
18
6
24
10
7
3
25
33
13
4
2
1
26

53

Print Date: 07-Apr-2022

PLATE-20

REAR SUSPENSION - SHOCK ABSORBER/S & ENGINE SUPPORT

Fig. No.	Part No.	Description	Qty	Remarks
36	568289	RUBBER BUMPER	2	
37	661266	SHOULDER WASHER	4	
38	643741	HEX HDD BOLT M10 X 80 CL 12.9	4	
39	226662	RING FOR ELASTIC SUPPORT	2	
40	226661	INTERNAL BUSH	2	
41	6C000373	ARM SUB-ASSLY LH REAR	1	
42	6C000372	ARM SUB-ASSLY RH REAR	1	
43	74414	RUBBER BUSH/BUFFER FOR COUPLING SHOCK ABSORBE	4	
44	6066	PL WASHER 10.5X38X9	2	
45	16410	SPRING WASHER	2	
46	20110	HEX NUT M10	2	
47	136451R	SHOCK ABSORBER REAR	2	
48	267068	HEX HEAD BOLT M10 X 60 CC 10.9	2	
49	286328	PLAIN WASHER 20X10.2X2	2	
50	231370	SELF BREAKING NUT M10	2	
51	157103	BUSH - SHOCK ABSORBER	2	
52	107827	SPACER	1	

54

Print Date: 07-Apr-2022

PLATE-21

MUF CUP & DRIVE SHAFT & BELLOW

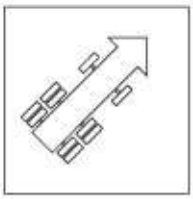

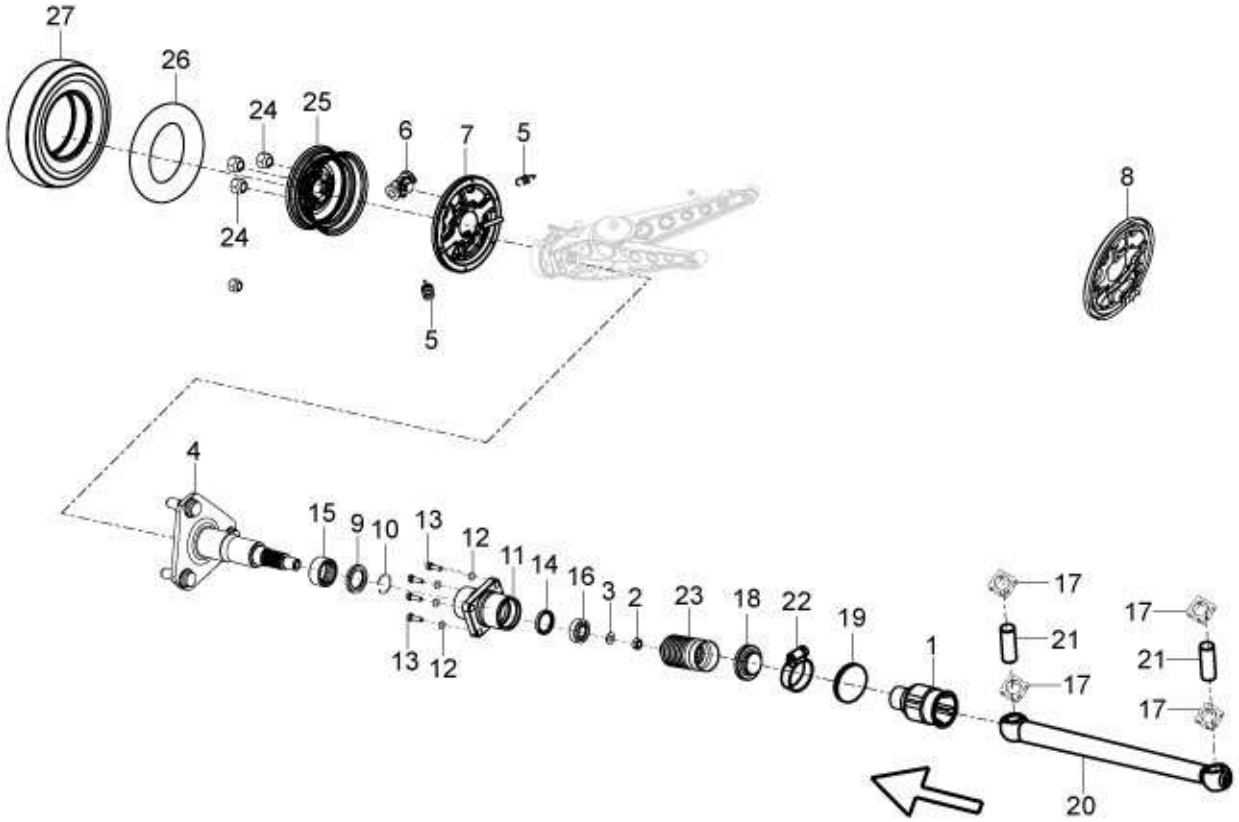
27
26
24
25
6
7
5
24
5
8
4
15
9
10
13
12
11
14
16
3
2
23
18
22
19
1
17
21
17
20
13
12
17
21
17

55

Print Date: 07-Apr-2022

PLATE-21

MUF CUP & DRIVE SHAFT & BELLOW

Fig. No.	Part No.	Description	Qty	Remarks
1	6C000580	MUFF CUP	2	Qty. for LH & RH
2	6C000555	STEEL INSERT NUT (M14X1.5)	2	Qty. for LH & RH
3	87067	PLAIN WASHER 30.5X14.3X2	2	Qty. for LH & RH
4	6C000576	WHEEL AXLE	2	Qty. for LH & RH
5	602497	JAWS STOP SPRINGS	4	Qty. for LH & RH
6	587616	BRAKE CYLINDER FR ASSLY (DIA. 22.225)	2	Qty. for LH & RH
7	6C000277	JAWS-SUPPORTING DISK FOR LEFT WHEEL WITH	1	Qty. for LH
8	6C000279	JAW-SUPPORT DISK FOR RIGHT WHEEL WITH AS	1	Qty. for Ã?Â RH
9	20359	SEAL RING	2	Qty. for LH & RH
10	6650	CIRCLIP DIA 50 (INT)	2	Qty. for LH & RH
11	6C000662	REAR WHEEL HUB	2	Qty. for LH & RH
12	16410	SPRING WASHER	8	Qty. for LH & RH
13	31159	HEX HD SCREW M10 X 35 CC 8.8	8	Qty. for LH & RH
14	196302	OIL SEAL	2	Qty. for LH & RH
15	661282	NEEDLE ROLLER BEARING	2	Qty. for LH & RH
16	243303R	DEEP GROVE BALL BRG-RR WH AXLE	2	Qty. for LH & RH
17	6C000319	SLIDING BLOCK	8	Qty. for LH & RH
18	6C000525	RUBBER WASHER	2	Qty. for LH & RH
19	6C000632	RUBBER WASHER	2	Qty. for LH & RH
20	6C000578	PROPELLER SHAFT S/A	1	Qty. for LH & RH
21	113099	PIVOT	2	Qty. for LH & RH
22	612459	WORM TYPE HOSE CLIP SIZE 16	2	Qty. for LH & RH
23	6C000255	BELLOW	2	Qty. for LH & RH
24	660931	WHEEL NUT (M12 X 1.5)	9	Qty. for LH & RH
25	644973R	WHEEL RIM ASSY.	1	Qty. for LH & RH
26	151924	INNER TUBE TYRE 4.5 X 10 INCH	1	Qty. for LH & RH
27	6C000664R	TYRE	1	Qty. for LH & RH
27	6C000655R	LOW RRC TYRE 4.5X10INCH EV-CARGO	1	Complete Assly

56

Print Date: 07-Apr-2022

PLATE-22

BRAKE - TANDEM MASTER CYLINDER, BRAKE PIPE AND HAND BRAKES

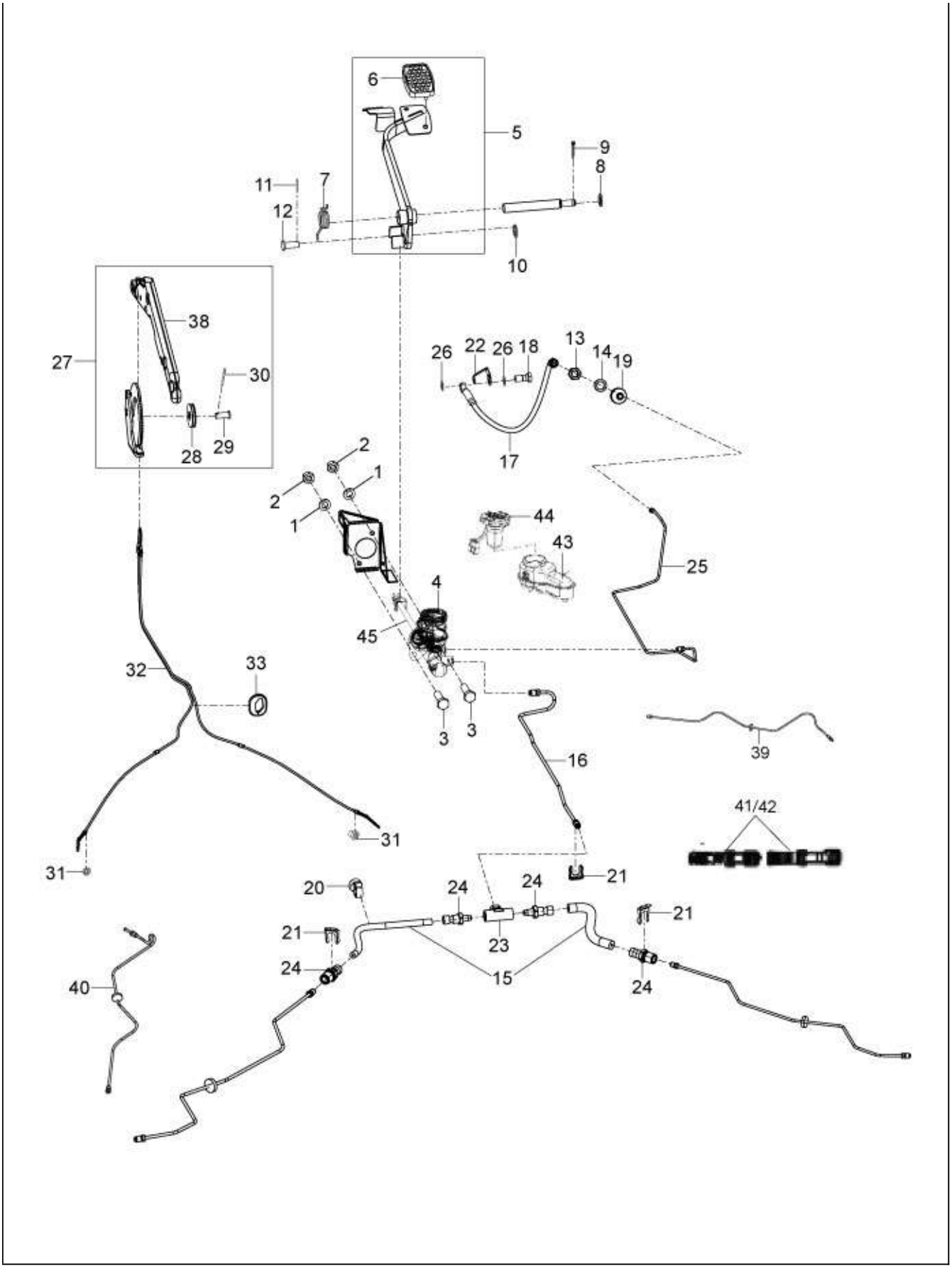
6
5
9
8
11
7
12
10
38
27
30
28
29
26
22
26
18
13
14
19
17
2
1
2
1
44
43
25
4
45
32
33
3
3
16
39
41/42
31
31
21
20
24
24
21
21
23
24
15
24
40

57

Print Date: 07-Apr-2022

PLATE-22

BRAKE - TANDEM MASTER CYLINDER, BRAKE PIPE AND HAND BRAKES

Fig. No.	Part No.	Description	Qty	Remarks
1	16408	SPRING WASHER M8	2	
2	20108	HEX NUT M8	2	
3	31122	HEX HD. SCREW M8X30 CL 8.8	1	
4	6C000443	INTEGRATED RESERVOIR & TMC	1	
4.1	6C000468	RESERVOIR KIT TMC	1	NI
4.2	6C000469	RESERVOIR CAP	1	NI
5	6C000586	BRAKE PEDAL ASSEMBLY	1	old- Brake port vertical position
5	6C000803	BRAKE PEDAL ASSEMBLY	1	Appl. From VIN Cut Off no. MBX0007ZB1B161646
5.1	6D001183	PIGTAIL, BRAKE POT SWITCH	1	Appl. From VIN Cut Off no. MBX0007ZB1B161646
6	567461	RUBBER PROTECTION FOR PEDAL	1	
7	587928	FOOT BRAKE PEDAL SPRING	1	
8	229524	WASHER 21X14.3X2	1	
9	568737	SPLIT PIN 4 X 25 (821 0425 2 2)	1	
10	3058	PLAIN WASHER 15X8.4X1.5	1	
11	567920	SPLIT PIN	1	
12	652001	PIN	1	
13	21216	HEX NUT M16 X 1.5	1	
14	48197	PL WASHER 24X16X1.5	3	
15	B023786R	FLEXIBLE PIPE FOR REAR WHEEL BRAKE	1	
16	6C000573	TUBE ASSY,TMC SECONDARY TO T-CONNECTOR	1	
17	587624R	FLEXIBLE PIPING FOR FRONT WHEEL BRAKE R	1	
18	587829	BENJO BOLT	1	
19	138237	CAP	1	
20	B076007	PIPE CLIP 1 WAY	1	
21	136916	PLATE FOR RETAINING THE BRAKE FLEX. PIPE	3	
22	B003228	LOCK PLATE FRONT BRAKE HOSE	1	
23	643692	THREE WAY UNION	1	
24	644814R	FLEXIBLE BRAKE HOSE	1	
25	6C000431	BUNDY TUBE ASSY,TMC TO FRONT FLEX. HOSE	1	
26	127927R	PACKING	2	
27	587632	HAND BRAKE CONTROL ASSY.	1	Not serviceableÃ?Â¢??order child parts
28	567898	PULLEY FOR HAND BRAKE	1	
29	567899	CLEVIS PIN	1	
30	567920	SPLIT PIN	1	
31	604502	CUP RETAINING SPRING (41733)	2	

58

Print Date: 07-Apr-2022

PLATE-22

BRAKE - TANDEM MASTER CYLINDER, BRAKE PIPE AND HAND BRAKES

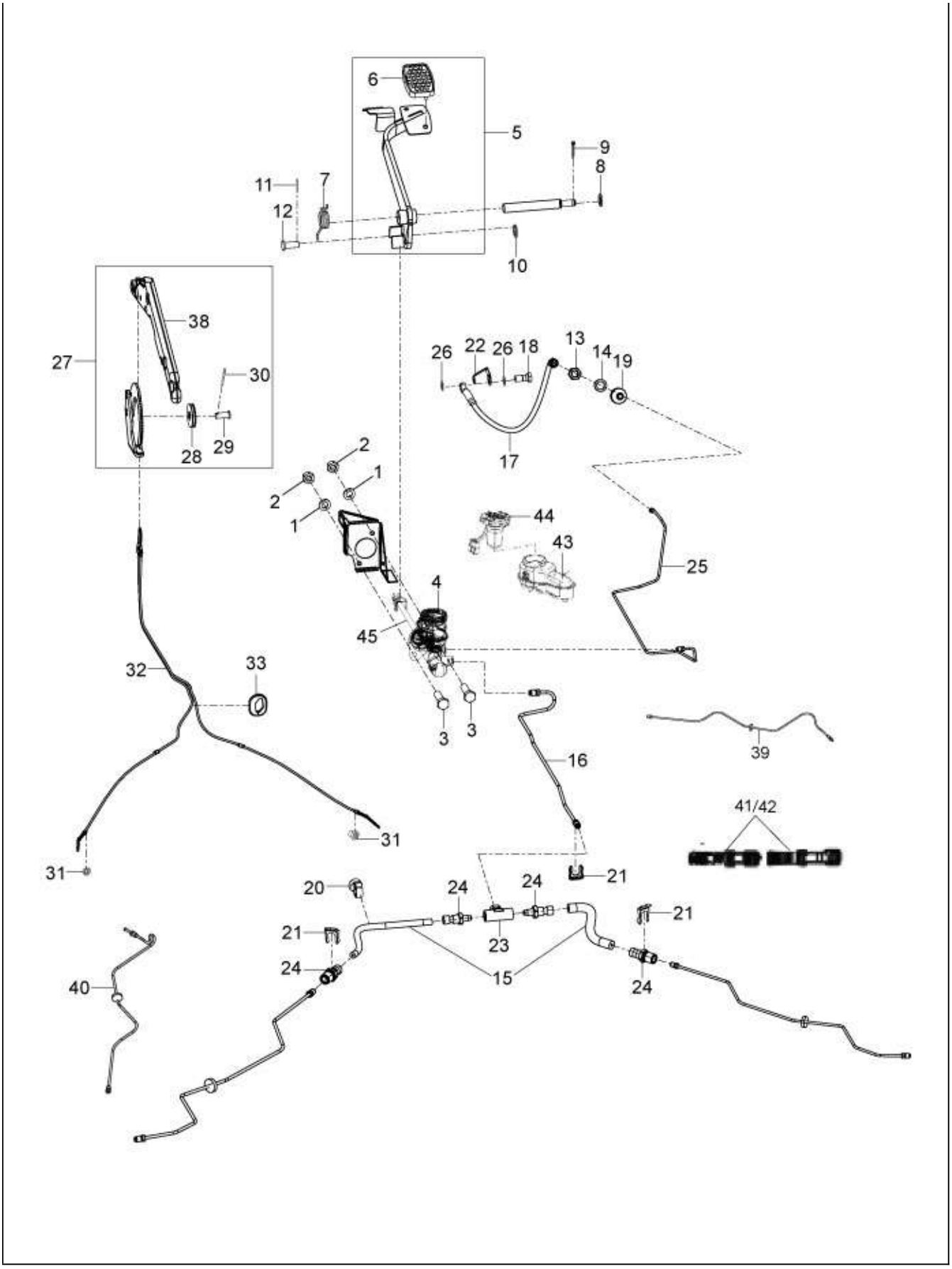
6
5
9
8
11
7
12
10
38
27
30
28
29
26
22
26
18
13
14
19
17
2
1
2
1
44
43
25
4
45
32
33
3
3
16
39
41/42
31
31
21
20
24
24
21
21
23
24
15
24
40

59

Print Date: 07-Apr-2022

PLATE-22

BRAKE - TANDEM MASTER CYLINDER, BRAKE PIPE AND HAND BRAKES

Fig. No.	Part No.	Description	Qty	Remarks
32	660341	PARKING BRAKE TRANS. SUB. ASSY.	1	
33	B077480	GROMMET RR PART OF CENTRAL BEAM ASSLY	1	
38	B075697	HAND BRAKE CONTROL ASSLY	1	
39	644813	BRAKE PUMP TUBE OF LEFT REAR WHEEL	1	
40	644812	BRAKE PUMP TUBE OF RIGHT REAR WHEEL	1	
41	B077155	MAJOR KIT TMC	1	
42	B077156	MINOR KIT TMC	1	
43	6C000468	RESERVOIR KIT TMC	1	
44	6C000469	RESERVOIR CAP	1	
45	587702	PUSH ROD	1	

60

Print Date: 07-Apr-2022

PLATE-23

FRONT BRAKE ASSEMBLY SELF ADJUSTING (DIA 180 X 40 MM)

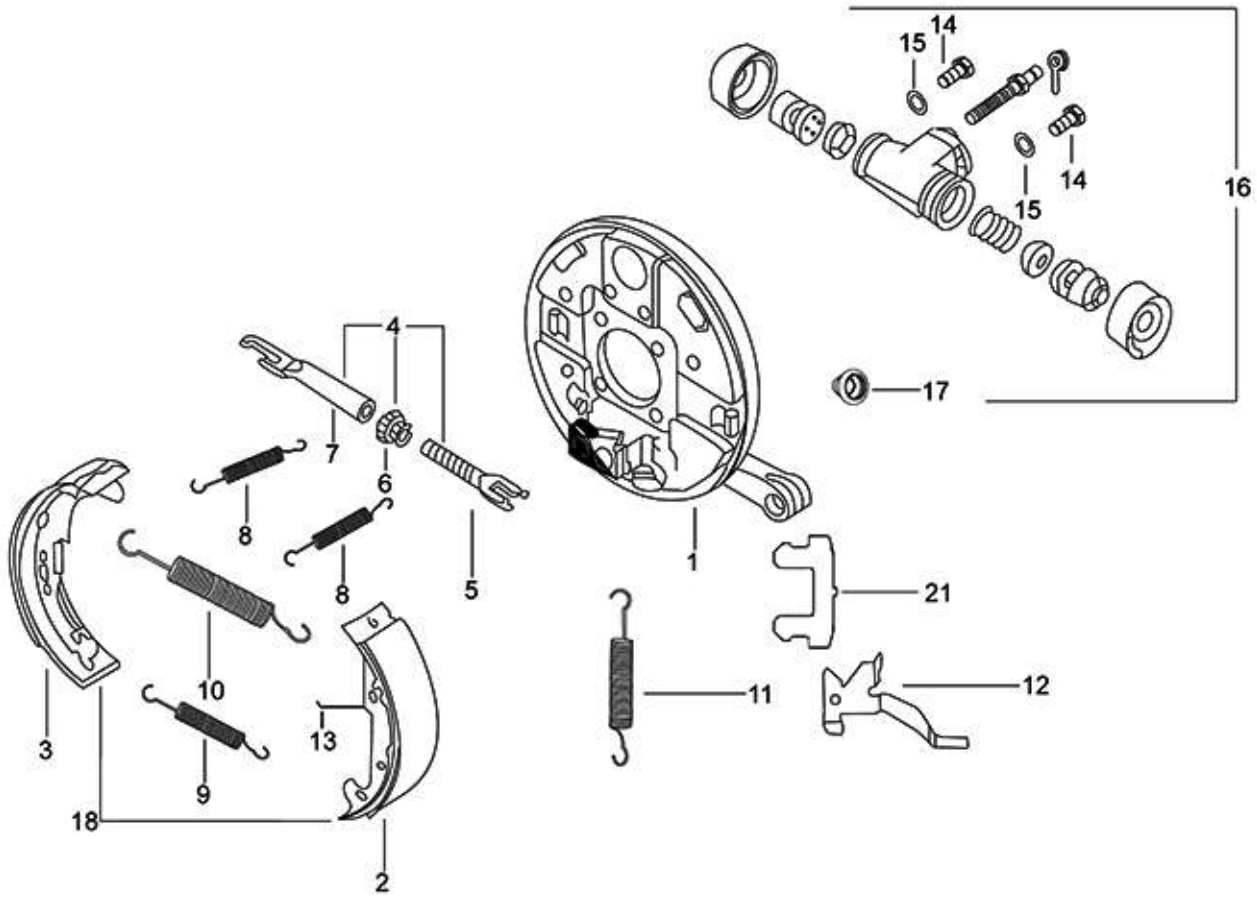
15
14
14
15
16
4
17
7
6
8
8
5
1
21
10
11
12
3
13
9
18
2

61

Print Date: 07-Apr-2022

PLATE-23

FRONT BRAKE ASSEMBLY SELF ADJUSTING (DIA 180 X 40 MM)

Fig. No.	Part No.	Description	Qty	Remarks
1	6C000275	BRACKET WHEEL CARRIER WITH PI	1	
2	B003784	LEADING SHOE COMP WITH PIN LH ANL 1643	1	
3	940004	FRONT BRAKE SHOE KIT COMPRISING OF 2 & 3	1	
4	179056	FORK ASSY LH	1	
5	178804	FORK FOR LH WHEEL	1	
6	178805	LH - GEAR	1	
7	178806	LH STRUT	1	
8	602497	JAWS STOP SPRINGS	2	
9	116088	SPRING SUPPORTING JAWS	1	
10	245038	SHOE RETURN SPRING	1	
11	178808	SPRING LEVER RETURN	1	
12	178807	LEVER LH	1	
13	178823	JUMPER LH	1	
13	178824	JUMPER	1	
14	63440	BOLT M6X12	2	
15	12536	SPRING WASHER	2	
16	587616	BRAKE CYLINDER FR ASSLY (DIA. 22.225)	1	
17	925501	CAP (KBX P 6450225)	1	
18	940004	FRONT BRAKE SHOE KIT COMPRISING OF 2 & 3	1	
19	925521	MINOR KIT WHEEL CYL. FRT (KBX 1007)	1	
20	6C000448	FRONT BRAKE ASSLY NON ASBESTOS BRAKE	1	NI -Under Development
21	6C000427	GROMMET FOR BRAKE INSPECTION HOLE	1	Under Development

62

Print Date: 07-Apr-2022

PLATE-24

REAR BRAKE ASSEMBLY SELF ADJUSTING (DIA 180 X 40 MM)

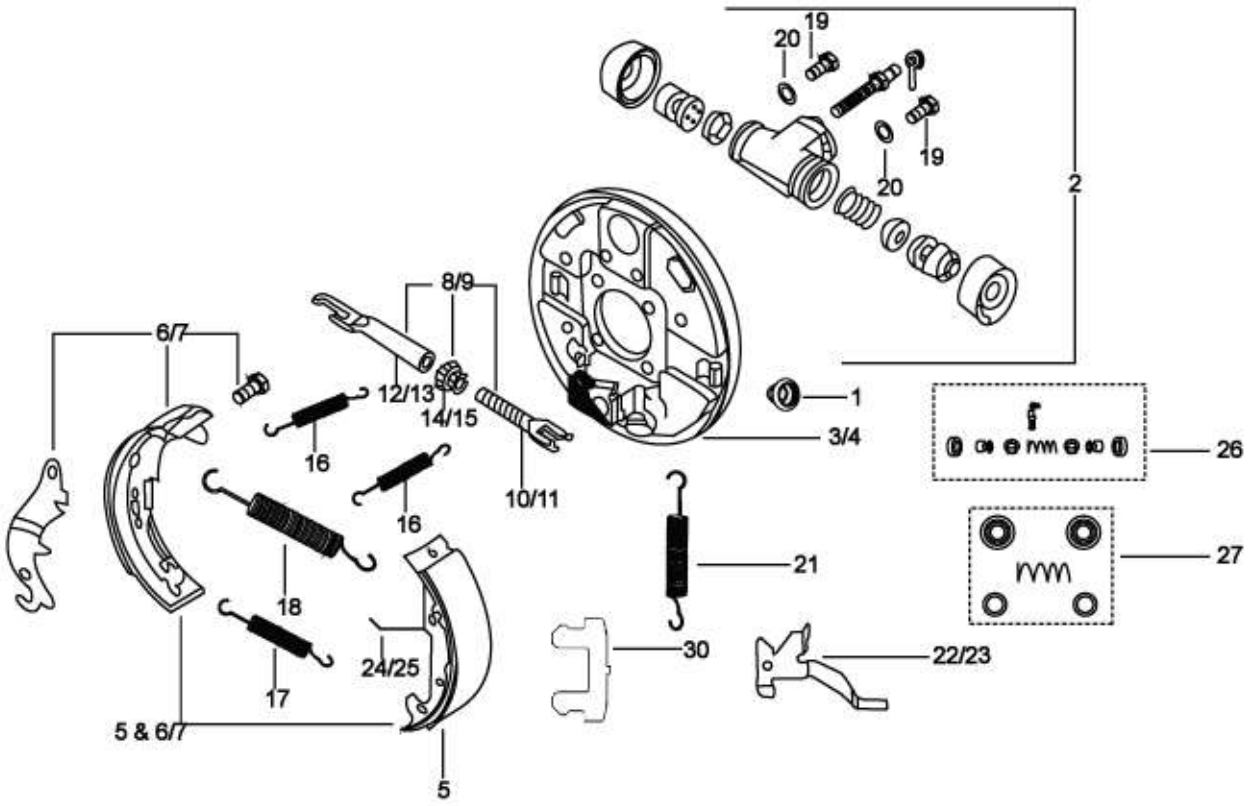
19
20
19
20
2
8/9
6/7
12/13
14/15
1
3/4
26
16
16
10/11
21
27
18
30
22/23
24/25
17
5 & 6/7
5

63

Print Date: 07-Apr-2022

PLATE-24

REAR BRAKE ASSEMBLY SELF ADJUSTING (DIA 180 X 40 MM)

Fig. No.	Part No.	Description	Qty	Remarks
1	925501	CAP (KBX P 6450225)	1	
2	632148	WHEEL CYLINDER ASSY. FRONT DIA. (25.4 MM)	1	
3	6C000277	JAWS-SUPPORTING DISK FOR LEFT WHEEL WITH	1	
4	6C000279	JAW-SUPPORT DISK FOR RIGHT WHEEL WITH AS	1	
5	B003784	LEADING SHOE COMP WITH PIN LH ANL 1643	1	
6	940005	REAR BRAKE SHOE SET L/H COMPRISING OF 5 & 7	1	
7	940006	REAR BRAKE SHOE SET R/H. COMPRISING OF 5 & 8	1	
8	179056	FORK ASSY LH	1	
9	179057	FORK ASSY. RH	1	
10	178804	FORK FOR LH WHEEL	1	
11	178818	RH FORK	1	
12	178806	LH STRUT	1	
13	178820	RH STRUT	1	
14	178805	LH - GEAR	1	
15	178819	RH GEAR	1	
16	602497	JAWS STOP SPRINGS	2	
17	116088	SPRING SUPPORTING JAWS	1	
18	245038	SHOE RETURN SPRING	1	
19	63440	BOLT M6X12	2	
20	12536	SPRING WASHER	2	
21	178808	SPRING LEVER RETURN	1	
22	178807	LEVER LH	1	
23	178821	LEVER RH	1	
24	178823	JUMPER LH	1	
25	178824	JUMPER	1	
26	925573	MAJOR KIT	1	
27	925574	MINOR KIT WHL CYL. RR	1	
28	940005	REAR BRAKE SHOE SET L/H COMPRISING OF 5 & 7	1	
29	940006	REAR BRAKE SHOE SET R/H. COMPRISING OF 5 & 8	1	
30	6C000427	GROMMET FOR BRAKE INSPECTION HOLE	1	Under Development

64

Print Date: 07-Apr-2022

PARTS INDEX

Ape_E-Xtra_LDxPlus_EV_FX

65

Print Date: 07-Apr-2022

PART NO	BLOCK	PART NO	BLOCK	PART NO	BLOCK
016406	PLATE-4	12540	PLATE-14	163661	PLATE-14
107718	PLATE-19	12540	PLATE-3	163663	PLATE-14
107732	PLATE-19	12546	PLATE-14	163665	PLATE-14
107827	PLATE-20	12778	PLATE-13	163666SP	PLATE-14
107870	PLATE-19	127927R	PLATE-22	163667SP	PLATE-14
107870	PLATE-20	128804ED	PLATE-13	163782	PLATE-14
107871	PLATE-19	128805ED	PLATE-13	163784	PLATE-14
108356	PLATE-14	136434	PLATE-19	16404	PLATE-7
108800	PLATE-14	136451R	PLATE-20	16405	PLATE-5
108801	PLATE-14	136916	PLATE-22	16405	PLATE-6
108804	PLATE-14	137026	PLATE-20	16405	PLATE-9
108805	PLATE-14	137235	PLATE-19	16405	PLATE-4
108873	PLATE-9	13812	PLATE-14	16406	PLATE-5
108873	PLATE-19	138237	PLATE-22	16406	PLATE-6
108874	PLATE-9	13861	PLATE-14	16406	PLATE-9
108874	PLATE-19	13880	PLATE-9	16406	PLATE-9
109012	PLATE-16	13880	PLATE-10	16406	PLATE-10
109064	PLATE-9	13935	PLATE-14	16406	PLATE-13
109064	PLATE-19	13958	PLATE-16	16406	PLATE-16
109066	PLATE-19	140603	PLATE-14	16406	PLATE-17
109120	PLATE-14	140728	PLATE-14	16406	PLATE-17
109121	PLATE-14	142424	PLATE-10	16406	PLATE-3
109263	PLATE-14	150579	PLATE-19	16408	PLATE-6
109265	PLATE-9	151924	PLATE-14	16408	PLATE-1
109265	PLATE-19	151924	PLATE-15	16408	PLATE-2
109892	PLATE-20	151924	PLATE-19	16408	PLATE-13
113099	PLATE-2	151924	PLATE-21	16408	PLATE-16
113099	PLATE-21	152025	PLATE-14	16408	PLATE-3
115531	PLATE-14	152580	PLATE-19	16408	PLATE-20
116088	PLATE-20	152580	PLATE-20	16408	PLATE-22
116088	PLATE-23	15335	PLATE-2	16408	PLATE-5
116088	PLATE-24	15335	PLATE-20	16410	PLATE-2
116103	PLATE-10	15640	PLATE-7	16410	PLATE-1
116333	PLATE-14	157103	PLATE-20	16410	PLATE-19
116334	PLATE-14	15727	PLATE-14	16410	PLATE-19
116831	PLATE-20	15727	PLATE-18	16410	PLATE-20
116971	PLATE-14	157716	PLATE-11	16410	PLATE-20
12136	PLATE-14	15900	PLATE-11	16410	PLATE-21
125289	PLATE-19	15911	PLATE-16	16410	PLATE-5
12536	PLATE-20	15996	PLATE-7	16603	PLATE-10
12536	PLATE-23	15996	PLATE-8	16626	PLATE-9
12536	PLATE-24	163659	PLATE-14	16670	PLATE-8
12540	PLATE-13	163660	PLATE-14	16670	PLATE-11

66

Print Date: 07-Apr-2022

PART NO	BLOCK	PART NO	BLOCK	PART NO	BLOCK
178804	PLATE-23	20106	PLATE-17	30072	PLATE-16
178804	PLATE-24	20106	PLATE-17	30074	PLATE-14
178805	PLATE-23	20106	PLATE-17	30089	PLATE-4
178805	PLATE-24	20108	PLATE-6	30104	PLATE-9
178806	PLATE-23	20108	PLATE-13	30209R	PLATE-19
178806	PLATE-24	20108	PLATE-14	30242	PLATE-14
178807	PLATE-23	20108	PLATE-14	30242	PLATE-14
178807	PLATE-24	20108	PLATE-16	3054	PLATE-6
178808	PLATE-23	20108	PLATE-22	3054	PLATE-8
178808	PLATE-24	20108	PLATE-5	3054	PLATE-18
178818	PLATE-24	20110	PLATE-9	3055	PLATE-5
178819	PLATE-24	20110	PLATE-19	3055	PLATE-6
178820	PLATE-24	20110	PLATE-20	3055	PLATE-8
178821	PLATE-24	20359	PLATE-20	3055	PLATE-4
178823	PLATE-23	20359	PLATE-21	3056	PLATE-5
178823	PLATE-24	21216	PLATE-22	3056	PLATE-6
178824	PLATE-23	226596	PLATE-20	3056	PLATE-9
178824	PLATE-24	226661	PLATE-20	3056	PLATE-16
179056	PLATE-23	226662	PLATE-20	3056	PLATE-17
179056	PLATE-24	229524	PLATE-22	3056	PLATE-17
179057	PLATE-24	231370	PLATE-2	3056	PLATE-3
180431	PLATE-19	231370	PLATE-20	3056	PLATE-4
181746	PLATE-6	231370	PLATE-20	3057	PLATE-13
181747	PLATE-6	231370	PLATE-20	3058	PLATE-5
182660R	PLATE-14	2383	PLATE-6	3058	PLATE-1
182661R	PLATE-14	2383	PLATE-2	3058	PLATE-13
182662	PLATE-14	243303R	PLATE-20	3058	PLATE-13
182663	PLATE-14	243303R	PLATE-21	3058	PLATE-16
183077	PLATE-14	245038	PLATE-23	3058	PLATE-3
18630	PLATE-11	245038	PLATE-24	3058	PLATE-22
190255	PLATE-14	261323	PLATE-6	31058	PLATE-11
192020017	PLATE-14	261323	PLATE-16	31058	PLATE-14
193724	PLATE-14	265091	PLATE-2	31088	PLATE-5
196302	PLATE-20	267065	PLATE-20	31088	PLATE-7
196302	PLATE-21	267068	PLATE-20	31088	PLATE-10
20104	PLATE-7	267068	PLATE-20	31088	PLATE-16
20105	PLATE-5	272178	PLATE-2	31089	PLATE-6
20105	PLATE-5	286328	PLATE-5	31089	PLATE-9
20105	PLATE-6	286328	PLATE-2	31089	PLATE-13
20105	PLATE-11	286328	PLATE-1	31089	PLATE-3
20105	PLATE-4	286328	PLATE-20	31092	PLATE-9
20106	PLATE-9	286328	PLATE-20	31092	PLATE-10
20106	PLATE-10	30072	PLATE-13	31116	PLATE-13

67

Print Date: 07-Apr-2022

PART NO	BLOCK	PART NO	BLOCK	PART NO	BLOCK
31118	PLATE-2	568692	PLATE-14	604759	PLATE-9
31119	PLATE-20	568737	PLATE-22	604759	PLATE-19
31121	PLATE-5	569150	PLATE-19	604785	PLATE-13
31122	PLATE-22	569156	PLATE-14	604812	PLATE-14
31154	PLATE-5	569157	PLATE-14	604948	PLATE-2
31159	PLATE-20	569165	PLATE-17	605389	PLATE-14
31159	PLATE-21	569166	PLATE-17	6066	PLATE-19
48197	PLATE-22	569177	PLATE-17	6066	PLATE-20
566545	PLATE-19	569178	PLATE-17	6078	PLATE-7
567454	PLATE-14	569193	PLATE-14	6078	PLATE-8
567454	PLATE-15	569241	PLATE-2	6078	PLATE-14
567455	PLATE-14	569244	PLATE-2	612459	PLATE-2
567455	PLATE-15	569375	PLATE-2	612459	PLATE-21
567456	PLATE-14	569377	PLATE-2	616931	PLATE-19
567456	PLATE-15	5745	PLATE-14	6173	PLATE-17
567457	PLATE-14	587616	PLATE-21	6177	PLATE-14
567457	PLATE-15	587616	PLATE-23	62961	PLATE-14
567458	PLATE-14	587624R	PLATE-22	632148	PLATE-20
567458	PLATE-15	587632	PLATE-22	632148	PLATE-24
567459	PLATE-14	587702	PLATE-22	632158	PLATE-9
567459	PLATE-15	587829	PLATE-22	632238	PLATE-14
567461	PLATE-22	587928	PLATE-22	632292	PLATE-17
567473	PLATE-19	587963	PLATE-16	632719	PLATE-19
567498R	PLATE-7	587971	PLATE-14	63440	PLATE-20
567498R	PLATE-18	587971	PLATE-19	63440	PLATE-23
567593	PLATE-11	5969	PLATE-18	63440	PLATE-24
567700	PLATE-6	6018	PLATE-14	640762	PLATE-18
567893	PLATE-8	6018	PLATE-15	642032	PLATE-18
567898	PLATE-22	602497	PLATE-20	64263	PLATE-14
567899	PLATE-22	602497	PLATE-21	643613	PLATE-13
567920	PLATE-8	602497	PLATE-23	643691	PLATE-8
567920	PLATE-22	602497	PLATE-24	643692	PLATE-22
567920	PLATE-22	604502	PLATE-22	643741	PLATE-20
567990	PLATE-9	604506	PLATE-17	643772R	PLATE-19
567990	PLATE-19	604558	PLATE-14	644812	PLATE-20
567991	PLATE-9	604560	PLATE-14	644812	PLATE-22
567991	PLATE-19	604603	PLATE-10	644813	PLATE-20
567992	PLATE-9	604689	PLATE-14	644813	PLATE-22
567992	PLATE-19	604690	PLATE-14	644814R	PLATE-22
567993	PLATE-9	604707	PLATE-14	644973R	PLATE-14
567993	PLATE-19	604707	PLATE-15	644973R	PLATE-15
568095	PLATE-19	604758	PLATE-9	644973R	PLATE-19
568289	PLATE-20	604758	PLATE-19	644973R	PLATE-21

68

Print Date: 07-Apr-2022

PART NO	BLOCK	PART NO	BLOCK	PART NO	BLOCK
645038	PLATE-2	6A001879	PLATE-1	6B002620LB	PLATE-13
645038	PLATE-3	6B000089ED	PLATE-13	6B002620NB	PLATE-13
645141	PLATE-16	6B000249	PLATE-12	6B002624	PLATE-12
652001	PLATE-22	6B000250	PLATE-14	6B002625	PLATE-12
652520	PLATE-19	6B000251	PLATE-14	6B002629GY	PLATE-13
652520	PLATE-20	6B000387ED	PLATE-16	6B002629LB	PLATE-13
652521	PLATE-19	6B001067	PLATE-13	6B002629NB	PLATE-13
660032	PLATE-5	6B001073	PLATE-13	6B002644	PLATE-10
660168	PLATE-8	6B001118	PLATE-16	6B002645	PLATE-10
660168	PLATE-10	6B001129	PLATE-16	6B002646	PLATE-10
660168	PLATE-16	6B001140	PLATE-16	6B002647	PLATE-10
660175	PLATE-13	6B001140	PLATE-16	6B002663	PLATE-8
660207ED	PLATE-13	6B001146	PLATE-13	6B002665	PLATE-8
660341	PLATE-22	6B001204R	PLATE-16	6B002757	PLATE-11
660931	PLATE-21	6B001207R	PLATE-16	6B002757	PLATE-11
661231	PLATE-19	6B001462	PLATE-16	6B002763	PLATE-16
661262	PLATE-13	6B001486	PLATE-16	6B002782ED	PLATE-13
661266	PLATE-20	6B001495R	PLATE-13	6B002782GY	PLATE-13
661267	PLATE-20	6B001496R	PLATE-13	6B002782LB	PLATE-13
661282	PLATE-20	6B001791	PLATE-8	6B002782NB	PLATE-13
661282	PLATE-21	6B001793	PLATE-8	6B002791	PLATE-12
661925	PLATE-8	6B001798	PLATE-7	6B002792	PLATE-11
661925	PLATE-9	6B001813	PLATE-8	6B002796	PLATE-11
661925	PLATE-11	6B001921	PLATE-16	6B002827	PLATE-11
662323	PLATE-13	6B001946	PLATE-16	6B002931	PLATE-12
6650	PLATE-20	6B001947	PLATE-16	6B002932	PLATE-12
6650	PLATE-21	6B002528	PLATE-12	6B002937	PLATE-12
6733	PLATE-19	6B002540	PLATE-12	6B002938	PLATE-12
6965	PLATE-11	6B002544	PLATE-12	6B003006	PLATE-11
6965	PLATE-14	6B002565	PLATE-12	6B003007	PLATE-11
6A001417	PLATE-2	6B002566	PLATE-12	6B003008	PLATE-11
6A001421	PLATE-1	6B002573	PLATE-12	6C000156	PLATE-2
6A001421	PLATE-2	6B002574	PLATE-12	6C000190	PLATE-9
6A001490	PLATE-2	6B002578	PLATE-16	6C000190	PLATE-19
6A001498	PLATE-1	6B002580	PLATE-16	6C000191	PLATE-9
6A001498	PLATE-2	6B002582	PLATE-11	6C000191	PLATE-19
6A001554	PLATE-1	6B002583	PLATE-11	6C000228	PLATE-5
6A001554	PLATE-2	6B002586	PLATE-11	6C000241	PLATE-2
6A001555	PLATE-1	6B002587	PLATE-11	6C000255	PLATE-2
6A001689	PLATE-1	6B002588	PLATE-11	6C000255	PLATE-21
6A001877	PLATE-1	6B002603	PLATE-12	6C000265	PLATE-9
6A001877	PLATE-2	6B002604	PLATE-12	6C000268	PLATE-9
6A001878	PLATE-2	6B002620GY	PLATE-13	6C000269	PLATE-9

69

Print Date: 07-Apr-2022

PART NO	BLOCK	PART NO	BLOCK	PART NO	BLOCK
6C000275	PLATE-19	6C000578	PLATE-21	6D000770	PLATE-3
6C000275	PLATE-23	6C000580	PLATE-2	6D000794	PLATE-5
6C000277	PLATE-21	6C000580	PLATE-21	6D000794	PLATE-4
6C000277	PLATE-24	6C000583	PLATE-20	6D000794	PLATE-4
6C000279	PLATE-20	6C000586	PLATE-22	6D000799	PLATE-1
6C000279	PLATE-20	6C000632	PLATE-2	6D000805	PLATE-5
6C000279	PLATE-21	6C000632	PLATE-2	6D000805	PLATE-4
6C000279	PLATE-24	6C000632	PLATE-21	6D000806	PLATE-6
6C000280ED	PLATE-9	6C000655R	PLATE-15	6D000807	PLATE-6
6C000316	PLATE-2	6C000655R	PLATE-21	6D000808	PLATE-6
6C000319	PLATE-2	6C000662	PLATE-20	6D000809	PLATE-6
6C000319	PLATE-21	6C000662	PLATE-21	6D000834	PLATE-6
6C000334	PLATE-5	6C000664R	PLATE-15	6D000837	PLATE-17
6C000359	PLATE-5	6C000664R	PLATE-21	6D000839	PLATE-6
6C000360	PLATE-5	6C000774	PLATE-3	6D000839	PLATE-3
6C000372	PLATE-20	6C000803	PLATE-22	6D000858	PLATE-5
6C000373	PLATE-20	6D000145R	PLATE-11	6D000884	PLATE-5
6C000420	PLATE-1	6D000146R	PLATE-11	6D000884	PLATE-4
6C000421	PLATE-1	6D000251	PLATE-6	6D000885	PLATE-5
6C000422	PLATE-1	6D000305	PLATE-11	6D000885	PLATE-4
6C000423	PLATE-1	6D000355	PLATE-6	6D000886	PLATE-5
6C000424	PLATE-1	6D000360	PLATE-6	6D000886	PLATE-4
6C000425	PLATE-1	6D000361	PLATE-6	6D000899R	PLATE-6
6C000427	PLATE-23	6D000362	PLATE-6	6D000900R	PLATE-6
6C000427	PLATE-24	6D000363	PLATE-6	6D000917	PLATE-5
6C000431	PLATE-22	6D000364	PLATE-7	6D000939	PLATE-5
6C000443	PLATE-22	6D000365	PLATE-7	6D000939	PLATE-4
6C000448	PLATE-23	6D000366	PLATE-7	6D000948	PLATE-8
6C000453	PLATE-9	6D000367	PLATE-8	6D000952	PLATE-8
6C000468	PLATE-22	6D000369	PLATE-7	6D000965	PLATE-4
6C000468	PLATE-22	6D000370	PLATE-6	6D000966	PLATE-4
6C000469	PLATE-22	6D000378	PLATE-5	6D000967	PLATE-4
6C000469	PLATE-22	6D000405	PLATE-9	6D000968	PLATE-4
6C000473SP	PLATE-19	6D000463	PLATE-5	6D000988	PLATE-3
6C000475SP	PLATE-19	6D000463	PLATE-4	6D001002	PLATE-3
6C000525	PLATE-2	6D000485	PLATE-5	6D001020	PLATE-6
6C000525	PLATE-21	6D000520	PLATE-4	6D001108	PLATE-7
6C000555	PLATE-21	6D000522	PLATE-4	6D001133	PLATE-6
6C000568	PLATE-8	6D000523	PLATE-4	6D001164	PLATE-4
6C000573	PLATE-22	6D000528	PLATE-4	6D001183	PLATE-22
6C000576	PLATE-20	6D000539	PLATE-11	6D001194	PLATE-4
6C000576	PLATE-21	6D000540	PLATE-11	6D001194	PLATE-4
6C000578	PLATE-2	6D000769	PLATE-3	6D001195	PLATE-5

70

Print Date: 07-Apr-2022

PART NO	BLOCK	PART NO	BLOCK	PART NO	BLOCK
6D001195	PLATE-4	B001954R	PLATE-14	B074568	PLATE-18
6D001196	PLATE-5	B001954R	PLATE-15	B074905	PLATE-8
6D001196	PLATE-4	B002847	PLATE-14	B075697	PLATE-22
6D001197	PLATE-5	B002848	PLATE-14	B076007	PLATE-22
6D001197	PLATE-4	B003228	PLATE-22	B076098ED	PLATE-16
6G000131	PLATE-8	B003784	PLATE-23	B076120	PLATE-11
6H000146	PLATE-12	B003784	PLATE-24	B076205	PLATE-13
6H000159	PLATE-12	B003864	PLATE-14	B076205	PLATE-13
74414	PLATE-19	B003865	PLATE-14	B076303	PLATE-17
74414	PLATE-20	B006853	PLATE-9	B076304	PLATE-17
74521	PLATE-19	B008292	PLATE-2	B076448	PLATE-18
75708	PLATE-19	B023786R	PLATE-22	B076605	PLATE-11
78307	PLATE-10	B024532	PLATE-7	B076606	PLATE-11
808000826	PLATE-13	B024733	PLATE-14	B076801	PLATE-10
808000826	PLATE-3	B024734	PLATE-14	B076802	PLATE-10
8080	PLATE-8	B041567	PLATE-3	B076859	PLATE-19
8451	PLATE-14	B041653	PLATE-9	B077155	PLATE-22
87067	PLATE-19	B042505ED	PLATE-13	B077156	PLATE-22
87067	PLATE-21	B042703	PLATE-14	B077480	PLATE-22
8771	PLATE-19	B042814	PLATE-14	B078272	PLATE-11
8808	PLATE-14	B073366R	PLATE-7	B078274	PLATE-11
8847	PLATE-14	B073366R	PLATE-18	B078286R	PLATE-11
89281	PLATE-14	B073478R	PLATE-8	B078956	PLATE-9
920081	PLATE-6	B073478R	PLATE-18	B078957	PLATE-9
920083	PLATE-6	B073479R	PLATE-8	B078970	PLATE-9
920084	PLATE-6	B073479R	PLATE-18	B079248	PLATE-9
925501	PLATE-23	B073481R	PLATE-8	D9004159230	PLATE-11
925501	PLATE-24	B073481R	PLATE-18	E500405518	PLATE-14
925521	PLATE-23	B073715	PLATE-18	KIT6D000952	PLATE-8
925571	PLATE-17	B073810	PLATE-8	KIT940003R	PLATE-19
925573	PLATE-24	B073813	PLATE-8	KIT95021R	PLATE-9
925574	PLATE-24	B073814	PLATE-8	KIT95021R	PLATE-19
925581	PLATE-6	B073848	PLATE-9	KIT95022R	PLATE-9
925581	PLATE-11	B074033	PLATE-6	KIT95022R	PLATE-19
940004	PLATE-23	B074040	PLATE-9	KIT95124	PLATE-15
940004	PLATE-23	B074150PC	PLATE-16	KIT96016R	PLATE-9
940005	PLATE-24	B074173	PLATE-14	KIT96016R	PLATE-19
940005	PLATE-24	B074261	PLATE-8	KIT96033R	PLATE-9
940006	PLATE-24	B074262	PLATE-8	KIT96033R	PLATE-19
940006	PLATE-24	B074275	PLATE-8	NS	PLATE-16
97756	PLATE-14	B074327	PLATE-6	NS	PLATE-16
97756	PLATE-14	B074498	PLATE-9	NS	PLATE-16
B001561	PLATE-19	B074568	PLATE-7	NS	PLATE-17

71