# Parts Catalog

# Commercial Vehicle

**APECITY_DLX_NXTPlus_PTL _EXP_BSIII**

**PIAGGIO VEHICLES PRIVATE LIMITED**
Registered Office: Bund Garden Road ,Opp. Residency Club , Pune (India)

Print Date: 07-Apr-2022

# PLATES INDEX


| Sr No. | Plate Name | Plate No. | Page No. |
|---|---|---|---|
| 1 | Engine Assembly | 1 | 1-2 |
| 2 | COUPLED CRANKCASE | 2 | 3-6 |
| 3 | CRANKSHAFT | 3 | 7-8 |
| 4 | Cylinder Piston Group | 4 | 9-10 |
| 5 | CYLINDER HEAD UNIT - VALVE | 5 | 11-12 |
| 6 | ROCKER LEVERS SUPPORT UNIT | 6 | 13-14 |
| 7 | CYLINDER HEAD COVER | 7 | 15-16 |
| 8 | OIL PUMP | 8 | 17-18 |
| 9 | STARTER - ELECTRIC STARTER | 9 | 19-20 |
| 10 | FLYWHEEL_A.C GENERATOR ASSY. | 10 | 21-22 |
| 11 | FAN COVER & SHROUD ASSY. | 11 | 23-24 |
| 12 | GEAR-BOX COMPONENTS & GEAR SHIFTER | 12 | 25-26 |
| 13 | CLUTCH ASSY & CLUTCH COVER | 13 | 27-30 |
| 14 | DIFFERENTIAL | 14 | 31-32 |
| 15 | AIR FILTER & INTAKE SYSTEM | 15 | 33-34 |
| 16 | INTAKE FITTING - CARBURETOR | 16 | 35-36 |
| 17 | SILENCER | 17 | 37-38 |
| 18 | COMPLETE H.T. COIL | 18 | 39-40 |
| 19 | ENGINE MOUNTING | 19 | 41-42 |
| 20 | MAIN FRAME/BATTERY BKT/JACK BKT | 20 | 43-46 |
| 21 | PASS. BODY WITH DOORS &HOOD FRAME & SOFT TOP | 21 | 47-52 |
| 22 | WINDSHIELD, GLASS ,PACKING & MIRROR | 22 | 53-54 |
| 23 | MUDGUARD | 23 | 55-56 |
| 24 | FUEL TANK/FILTER/FUEL PIPES - PETROL | 24 | 57-58 |
| 25 | CAB COMPONENTS_CARPETS & TOOL KIT | 25 | 59-60 |
| 26 | DASHBOARD ASSLY COMPLETE & LOCK SET | 26 | 61-62 |
| 27 | HEAD LAMP & BEZEL ASSY, LOGO & SUPPORT | 27 | 63-64 |
| 28 | HANDLEBARS | 28 | 65-66 |
| 29 | FORK/STEERING TUBE - STEERING BEARING UNIT | 29 | 67-70 |
| 30 | REAR SUSPENSION - SHOCK ABSORBER/S & ENGINE SUPPORT | 30 | 71-74 |

Print Date: 07-Apr-2022

## PLATES INDEX


| Sr No. | Plate Name | Plate No. | Page No. |
|---|---|---|---|
| 31 | DRIVE SHAFT & BELLOW | 31 | 75-76 |
| 32 | Front Brake Assembly | 32 | 77-78 |
| 33 | Rear Brake Assembly | 33 | 79-80 |
| 34 | CABLES | 34 | 81-82 |
| 35 | TMC & BRAKING SYSTEM & TUBES | 35 | 83-84 |
| 36 | CONTROL PEDALS - LEVERS | 36 | 85-86 |
| 37 | SELECTORS - SWITCHES - BUTTONS | 37 | 87-88 |
| 38 | TAIL LAMP ASSY | 38 | 89-90 |
| 39 | MAIN CABLE HARNESS | 39 | 91-92 |
| 40 | ELECTRICAL DEVICES | 40 | 93-96 |
| 41 | WINDSCREEN WIPER | 41 | 97-98 |
| 42 | Stickers | 42 | 99-100 |
| 43 | Carburetor Child Parts | 16.1 | 101-102 |

Print Date: 07-Apr-2022

# PICTORIAL PLATES INDEX

**PLATE-1** **Engine Assembly**

**Page No. :1-2**

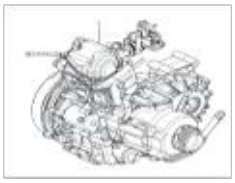

**PLATE-2** **COUPLED CRANKCASE**

**Page No. :3-6**

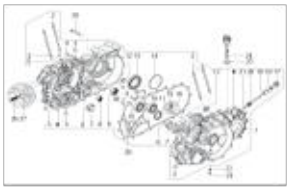

**PLATE-3** **CRANKSHAFT**

**Page No. :7-8**

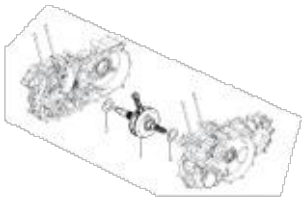

**PLATE-4** **Cylinder Piston Group**

**Page No. :9-10**

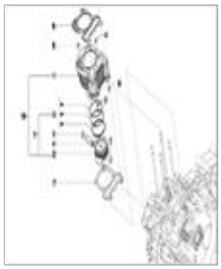

**PLATE-5** **CYLINDER HEAD UNIT - VALVE**

**Page No. :11-12**

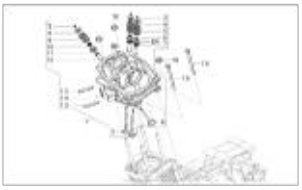

**PLATE-6** **ROCKER LEVERS SUPPORT UNIT**

**Page No. :13-14**

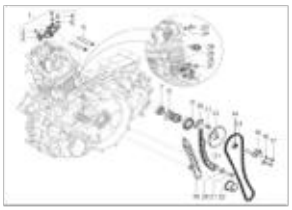

**PLATE-7** **CYLINDER HEAD COVER**

**Page No. :15-16**

**PLATE-8** **OIL PUMP**

**Page No. :17-18**

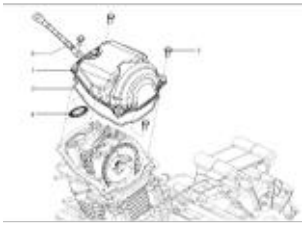

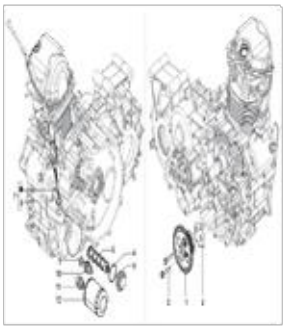

Print Date: 07-Apr-2022

# PICTORIAL PLATES INDEX

**PLATE-9 STARTER - ELECTRIC STARTER**

**Page No. :19-20**

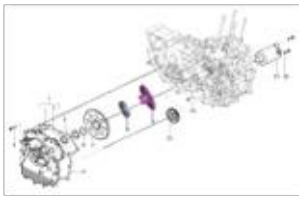

**PLATE-10 FLYWHEEL_A.C GENERATOR ASSY.**

**Page No. :21-22**

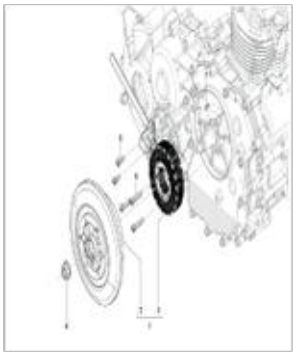

**PLATE-11 FAN COVER & SHROUD ASSY.**

**Page No. :23-24**

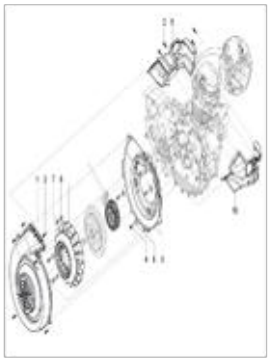

**PLATE-12 GEAR-BOX COMPONENTS & GEAR SHIFTER**

**Page No. :25-26**

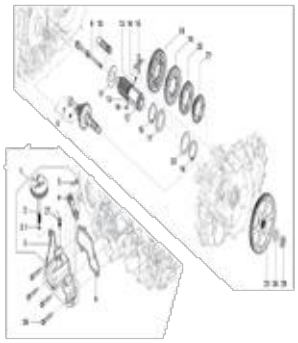

**PLATE-13 CLUTCH ASSY & CLUTCH COVER**

**Page No. :27-30**

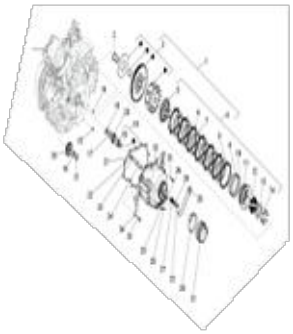

**PLATE-14 DIFFERENTIAL**

**Page No. :31-32**

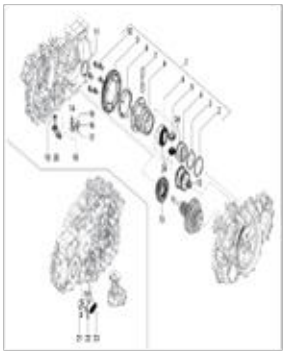

**PLATE-15 AIR FILTER & INTAKE SYSTEM**

**Page No. :33-34**

**PLATE-16 INTAKE FITTING - CARBURETOR**

**Page No. :35-36**

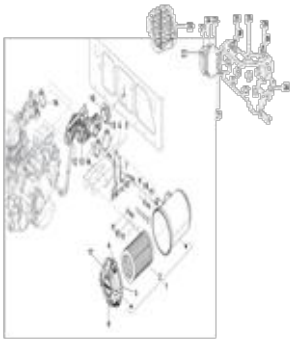

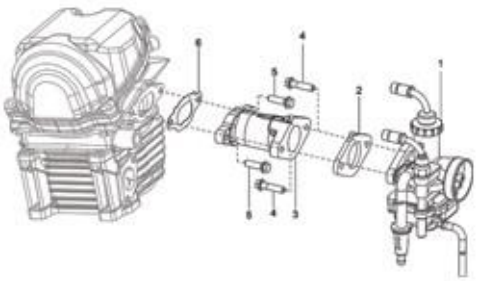

Print Date: 07-Apr-2022

# PICTORIAL PLATES INDEX

**PLATE-17 SILENCER**

**Page No. :37-38**

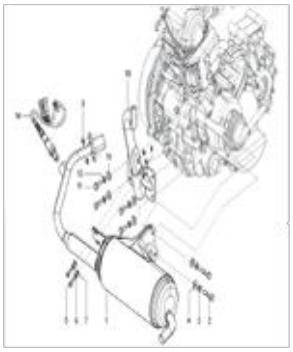

**PLATE-18 COMPLETE H.T. COIL**

**Page No. :39-40**

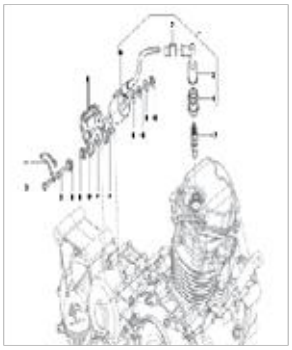

**PLATE-19 ENGINE MOUNTING**

**Page No. :41-42**

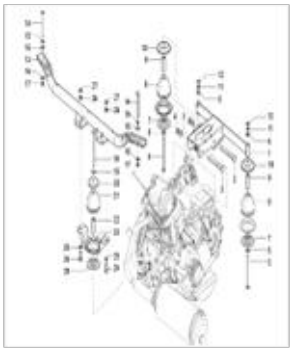

**PLATE-20 MAIN FRAME/BATTERY BKT/JACK BKT**

**Page No. :43-46**

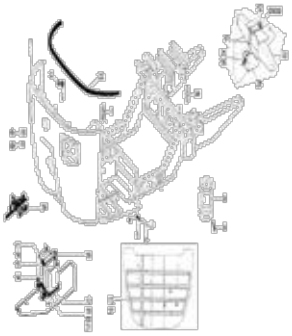

**PLATE-21 PASS. BODY WITH DOORS &HOOD FRAME & SOFT TOP**

**Page No. :47-52**

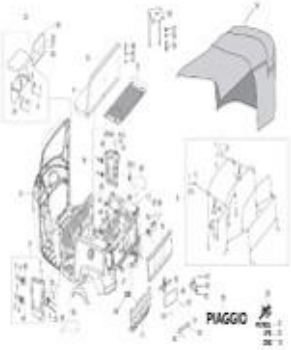


**PLATE-22 WINDSHIELD, GLASS ,PACKING & MIRROR**

**Page No. :53-54**

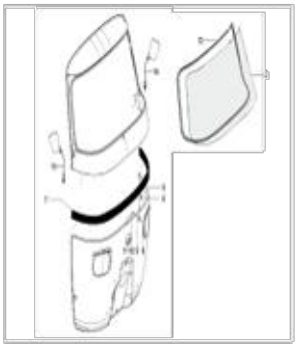

**PLATE-23 MUDGUARD**

**Page No. :55-56**

**PLATE-24 FUEL TANK/FILTER/FUEL PIPES - PETROL**

**Page No. :57-58**

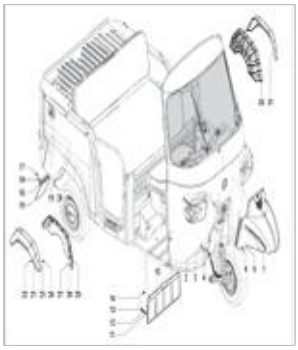

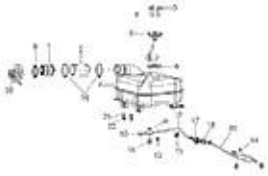

Print Date: 07-Apr-2022

# PICTORIAL PLATES INDEX

**PLATE-25** **CAB COMPONENTS_CARPETS & TOOL KIT**
**Page No. :59-60**

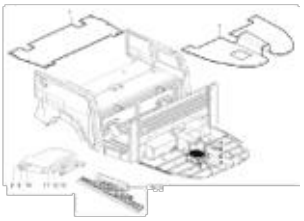

**PLATE-26** **DASHBOARD ASSLY COMPLETE & LOCK SET**
**Page No. :61-62**

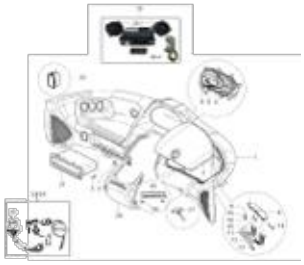

**PLATE-27** **HEAD LAMP & BEZEL ASSY, LOGO & SUPPORT**
**Page No. :63-64**

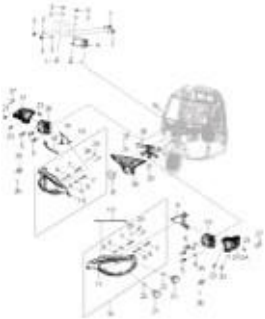

**PLATE-28** **HANDLEBARS**
**Page No. :65-66**

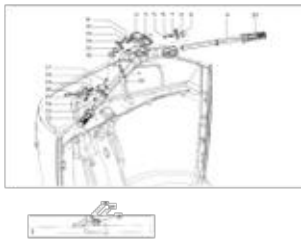

**PLATE-29** **FORK/STEERING TUBE - STEERING BEARING UNIT**
**Page No. :67-70**

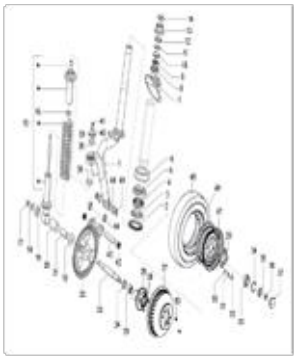

**PLATE-30** **REAR SUSPENSION - SHOCK ABSORBER/S & ENGINE SUPPORT**
**Page No. :71-74**

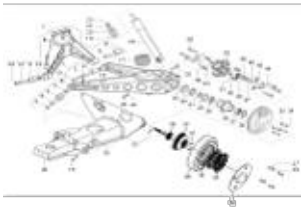

**PLATE-31** **DRIVE SHAFT & BELLOW**
**Page No. :75-76**

**PLATE-32** **Front Brake Assembly**
**Page No. :77-78**

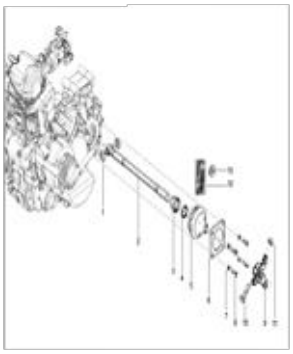

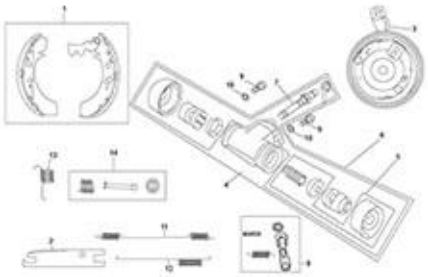

Print Date: 07-Apr-2022

# PICTORIAL PLATES INDEX

**PLATE-33 Rear Brake Assembly**

**Page No. :79-80**

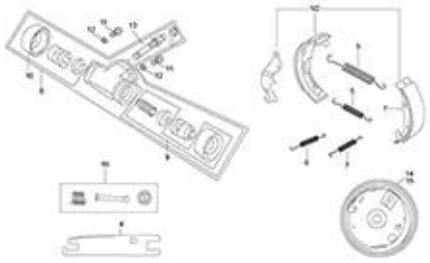

**PLATE-34 CABLES**

**Page No. :81-82**

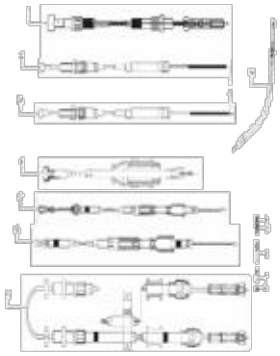

**PLATE-35 TMC & BRAKING SYSTEM & TUBES**

**Page No. :83-84**

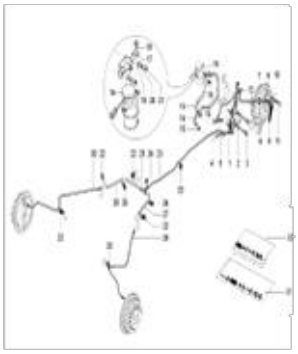

**PLATE-36 CONTROL PEDALS - LEVERS**

**Page No. :85-86**

**PLATE-37 SELECTORS - SWITCHES - BUTTONS**

**Page No. :87-88**

**PLATE-38 TAIL LAMP ASSY**

**Page No. :89-90**

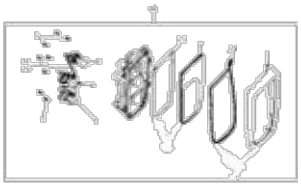

**PLATE-39 MAIN CABLE HARNESS**

**Page No. :91-92**

**PLATE-40 ELECTRICAL DEVICES**

**Page No. :93-96**

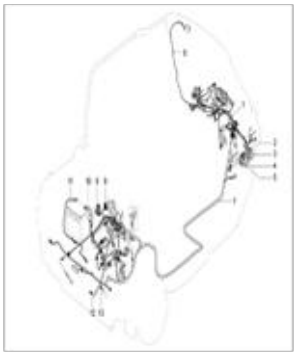

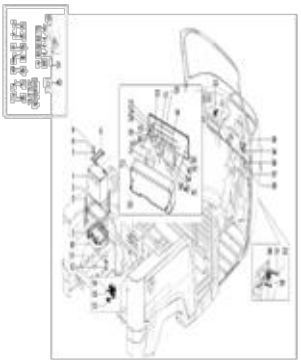

Print Date: 07-Apr-2022

# PICTORIAL PLATES INDEX

**PLATE-41 WINDSCREEN WIPER**

**Page No. :97-98**

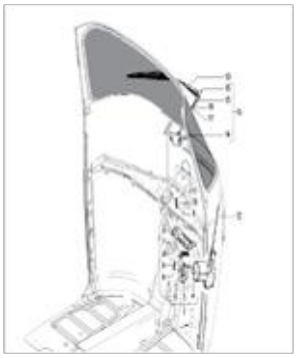

**PLATE-42 Stickers**

**Page No. :99-100**

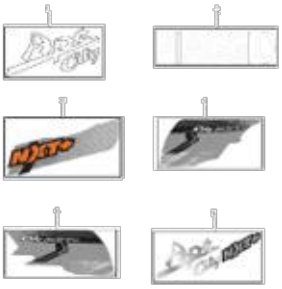

**PLATE-16.1 Carburetor Child Parts**

**Page No. :101-102**

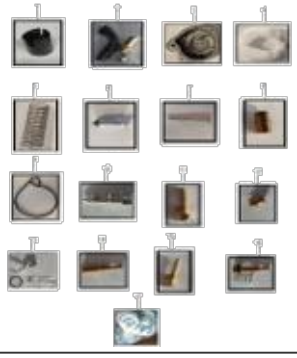

Print Date: 07-Apr-2022

**PLATE-1**

**Engine Assembly**

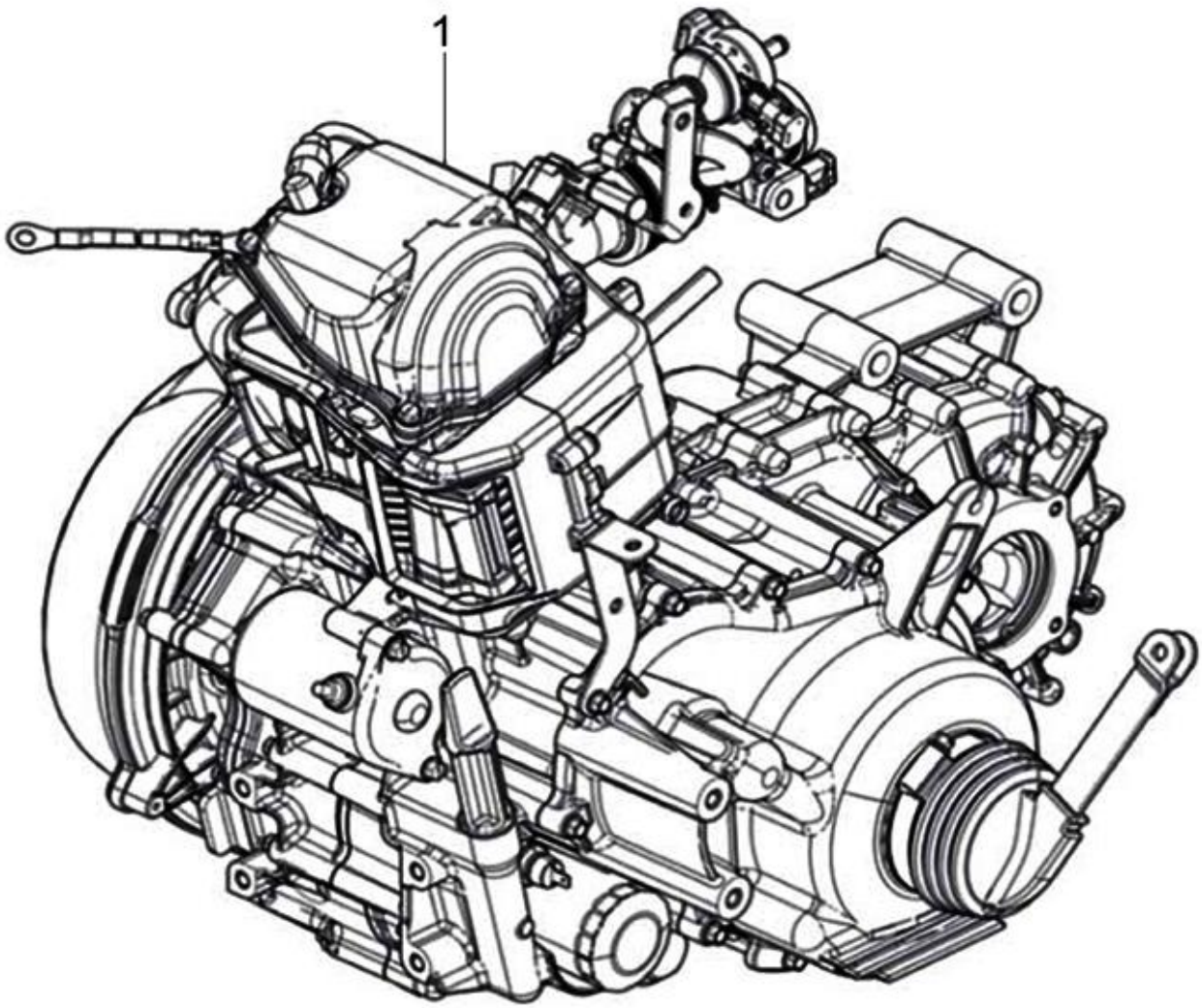
1

1

Print Date: 07-Apr-2022

**PLATE-1**

**Engine Assembly**

| Fig. No. | Part No. | Description | Qty | Remarks |
|---|---|---|---|---|
| 1 | CM293927 | ENG 230 4S 3V BSIII APÉ PAX PETROL EXP | 1 | |

2

Print Date: 07-Apr-2022

**PLATE-2**
**COUPLED CRANKCASE**

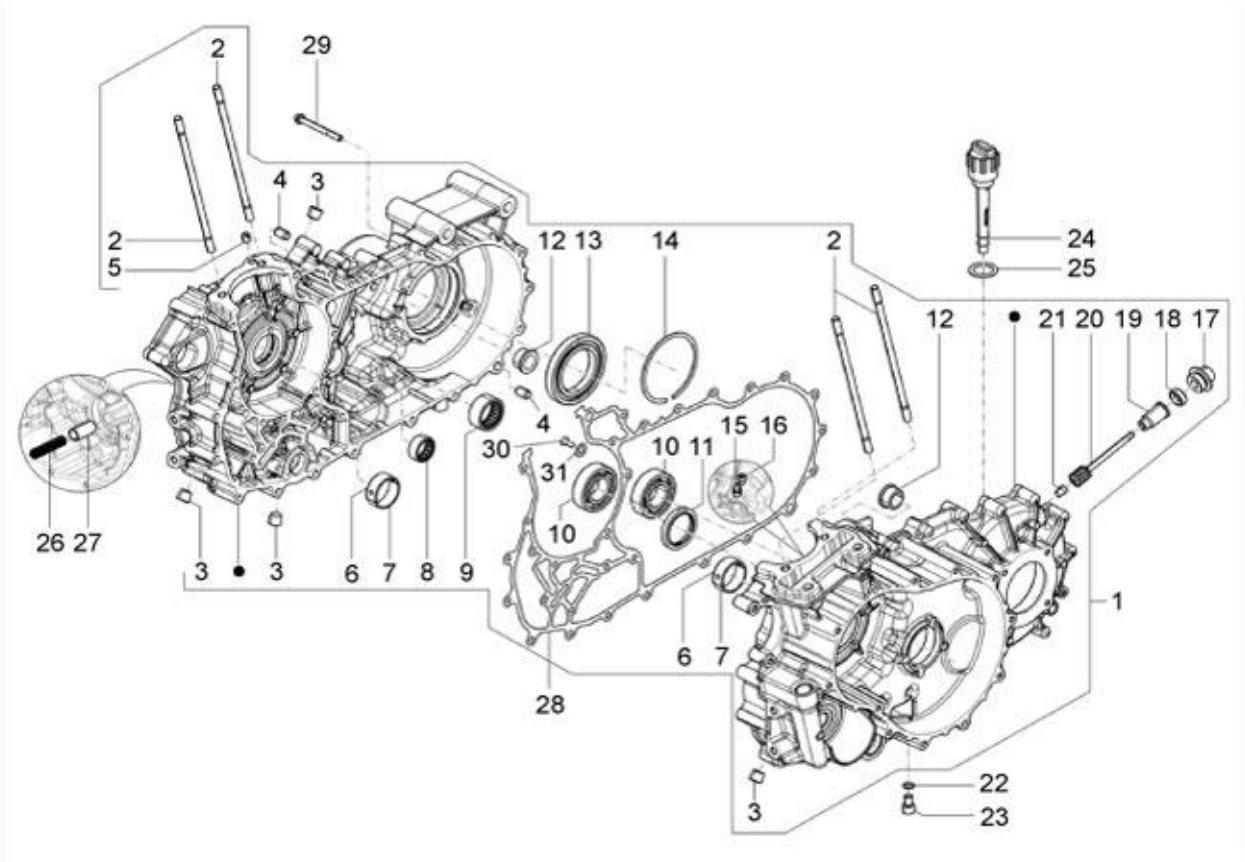
2
29
4
3
2
5
12 13
14
2
24
25
12
21 20 19 18 17
4
15 16
30
10 11
31
10
26 27
3
3
6 7 8 9
1
6 7
28
22
3
23

3

Print Date: 07-Apr-2022

**PLATE-2**
**COUPLED CRANKCASE**

| Fig. No. | Part No. | Description | Qty | Remarks |
|---|---|---|---|---|
| 1 | SP1A007046 | COMPLETE CRANKCASE- SPD | 1 | |
| 2 | B014755 | STUD SCREW | 4 | |
| 3 | 1A011246 | TAPER THREAD PLUG | 4 | |
| 4 | B015592 | REFERENCE DOWEL (D.9,5 H=15) | 2 | |
| 5 | 1A007774 | DOWEL | 1 | |
| 6 | 1A007663R | CRANKSHAFT STUB UPPER HALF BEARING | 1 | Service on colorwise set KIT95007R/7Y/7B |
| 7 | 1A007664R | CRANKSHAFT STUB LOWER HALF BEARING | 1 | Service on colorwise set KIT95007R/7Y/7B |
| 8 | 884222808 | NEEDLE BUSH 22X28X12 | 1 | |
| 9 | 1A007028 | ROLLER BEARING | 1 | |
| 10 | 1A007026 | BALL BEARING | 2 | |
| 11 | 1A002685 | SEAL RING 35X47X6 | 1 | |
| 12 | B042486 | BUSH | 2 | |
| 13 | 7066R | RADIAL BALL BEARING | 1 | |
| 14 | 111353 | CIRCLIP | 1 | |
| 15 | 1A008823 | PISTON COOLING JET | 1 | |
| 16 | 1A000612 | RETAINER SCREW - PRE COATED | 1 | |
| 17 | 1A008559 | BUSH (SPEEDOMETER GEAR) | 1 | |
| 18 | 117402 | OIL SEAL | 1 | |
| 19 | 117401 | BUSH | 1 | |
| 20 | 1A010720 | SPEEDOMETER GEAR | 1 | |
| 21 | 165121014 | PIN | 1 | |
| 22 | 485703 | WASHER | 1 | |
| 23 | 269755 | SOCKET HEAD SCREW (M8X12) | 1 | |
| 24 | 112898 | OIL LEVEL ARM WITH PLUG | 1 | |
| 25 | 127016015 | DIPSTICK SEALING WASHER | 1 | |
| 26 | 485655 | SPRING FOR OIL PRESSURE VALVE | 1 | |
| 27 | 829661 | OIL PRES.VALVE | 1 | |
| 28 | 1A006856 | HALF-CRANKCASES GASKET | 1 | |
| 29 | 432142 | HEXAGONAL RANGE HEAD SCREW (M6X35) | 30 | |
| 30 | 1A016964 | CSK PHILIPS HEAD SCREW | 1 | |
| 31 | 1A011217 | WASHER | 1 | |
| 32 | KIT95007R | CRANKSHAFT BEARING SET_RED COLOUR | 1 | Red color bearing set(consist Of sr no 6,7) |
| 33 | KIT95007Y | CRANKSHAFT BEARING SET_YELLOW COLOUR | 1 | Yellow color bearing set(consist Of sr no 6,7) |
| 34 | KIT95007B | CRANKSHAFT BEARING SET_BLUE COLOUR | 1 | Blue color bearing set(consist Of sr no 6,7) |
| 35 | KIT96028R | ENGINE GASKET SET APECITY BS3/4 STEP-2 | 1 | NI |

4

Print Date: 07-Apr-2022

**PLATE-2**
**COUPLED CRANKCASE**

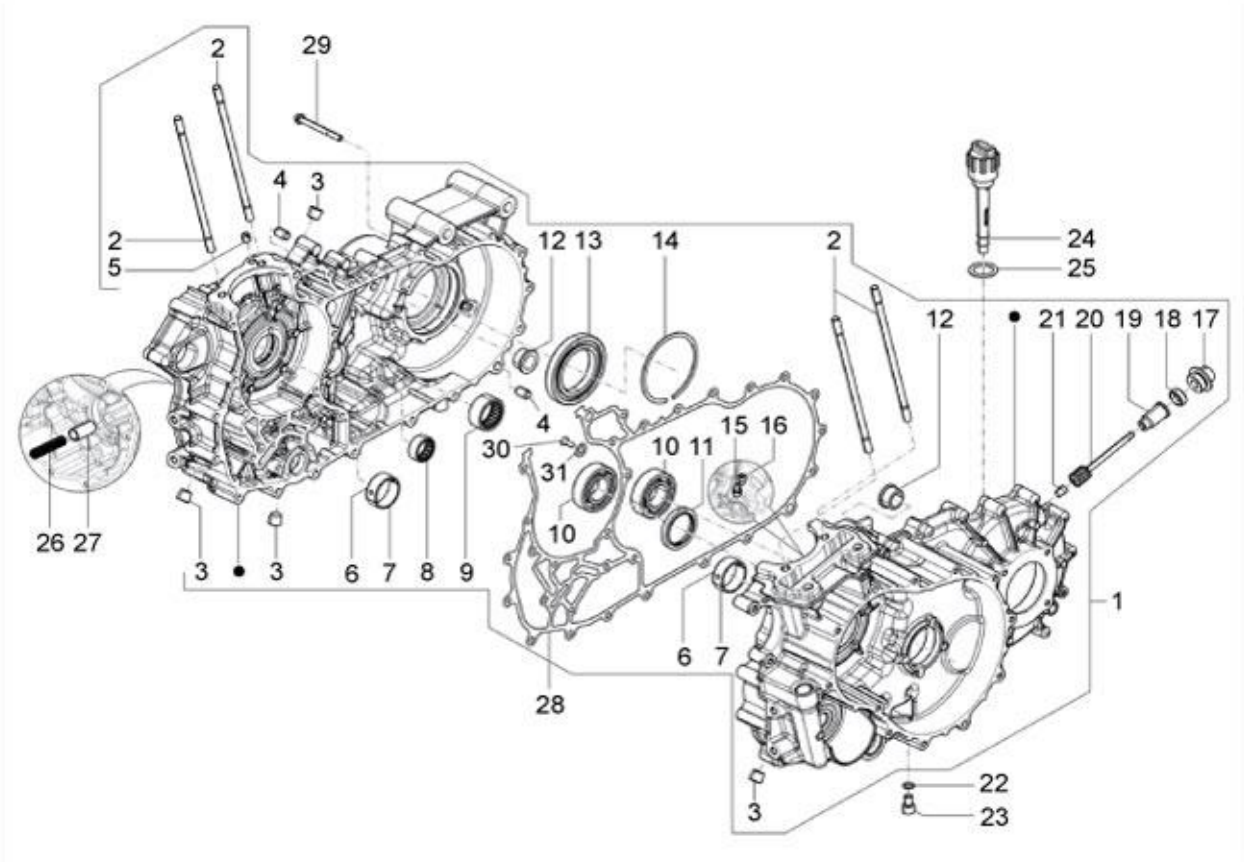
2
29
4
3
2
5
12 13
14
2
24
25
12
21 20 19 18 17
4
30
31
10 11
15 16
10
26 27
3
3
6 7 8 9
1
6 7
28
22
23
3

5

Print Date: 07-Apr-2022

**PLATE-2**
**COUPLED CRANKCASE**

| Fig. No. | Part No. | Description | Qty | Remarks |
|---|---|---|---|---|
| 36 | KIT95105R | ENG.OIL SEAL SET APECITY-STEP-2 AND 230CC AF | 1 | NI |

6

Print Date: 07-Apr-2022

**PLATE-3**
**CRANKSHAFT**

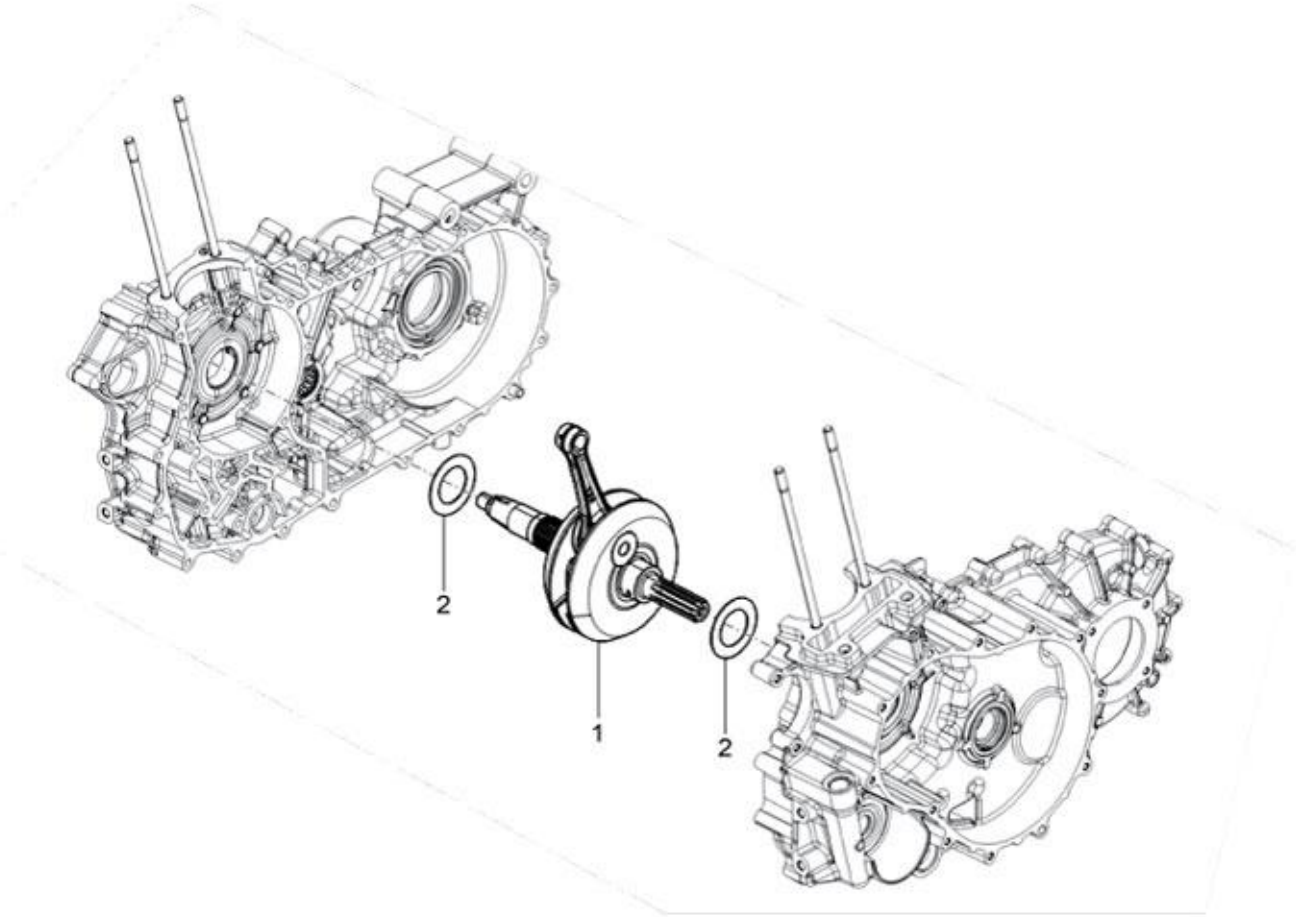
2
1
2

7

Print Date: 07-Apr-2022

**PLATE-3**
**CRANKSHAFT**

| Fig. No. | Part No. | Description | Qty | Remarks |
|---|---|---|---|---|
| 1 | 1A011066 | CRANKSHAFT ASSEMBLY | 1 | |
| 2 | B016144 | WASHER | 2 | |

8

Print Date: 07-Apr-2022

**PLATE-4**

**Cylinder Piston Group**

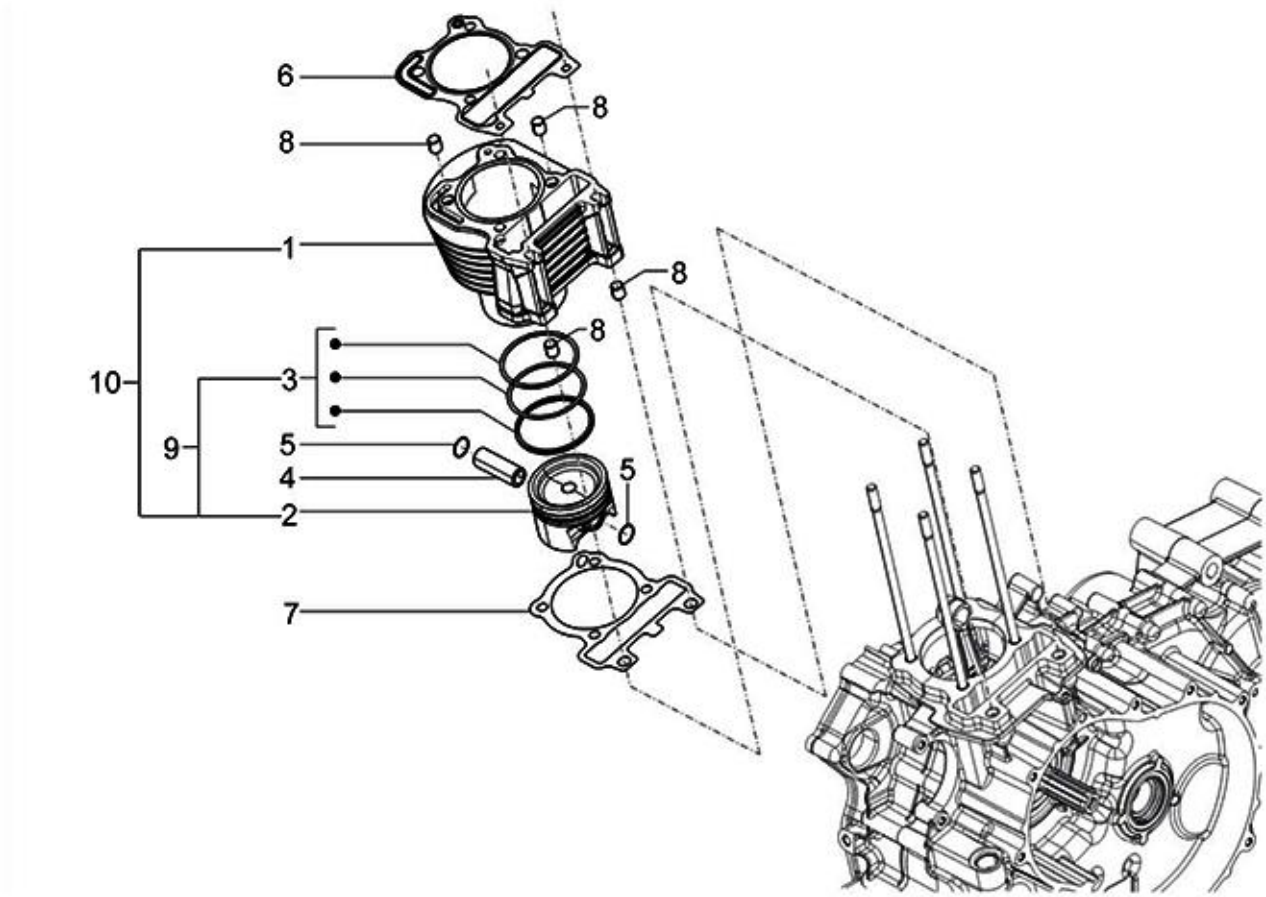
6
8
8
1
8
8
10
3
9
5
4
5
2
7

9

Print Date: 07-Apr-2022

**PLATE-4**

**Cylinder Piston Group**

| Fig. No. | Part No. | Description | Qty | Remarks |
|---|---|---|---|---|
| 1 | SP1A005855 | CYLINDER APE PAX SPD | 1 | |
| 2 | 1A018094 | PISTON DIA62.6 | 1 | |
| 3 | 1A009621R | PISTON RING GROUP | 1 | |
| 4 | 482335 | PISTON PIN | 1 | |
| 5 | 963486 | CIRCLIP FOR PISTON WRIST | 2 | |
| 6 | B014555 | HEAD CYLINDER GASKET | 1 | |
| 7 | CM284002 | CRANKCASE/CYLINDER GASKET (0.6) | 1 | |
| 7 | CM284003 | CRANKCASE/CYLINDER GASKET (0.8) | 1 | |
| 7 | CM284001 | CRANKCASE/CYLINDER GASKET (0.4) | 1 | |
| 8 | 435571 | REFERENCE DOWEL | 4 | |
| 9 | KIT96055R | PISTON ASSY.APE CITY AND APE CITYPLUS_ (PTL BS6) | 1 | NS- Service under BP Kit |
| 10 | KIT96054R | BP KIT APE CITY AND APE CITYPLUS_(PTL BS6) | 1 | common for BIII |

**10**

Print Date: 07-Apr-2022

**PLATE-5**

**CYLINDER HEAD UNIT - VALVE**

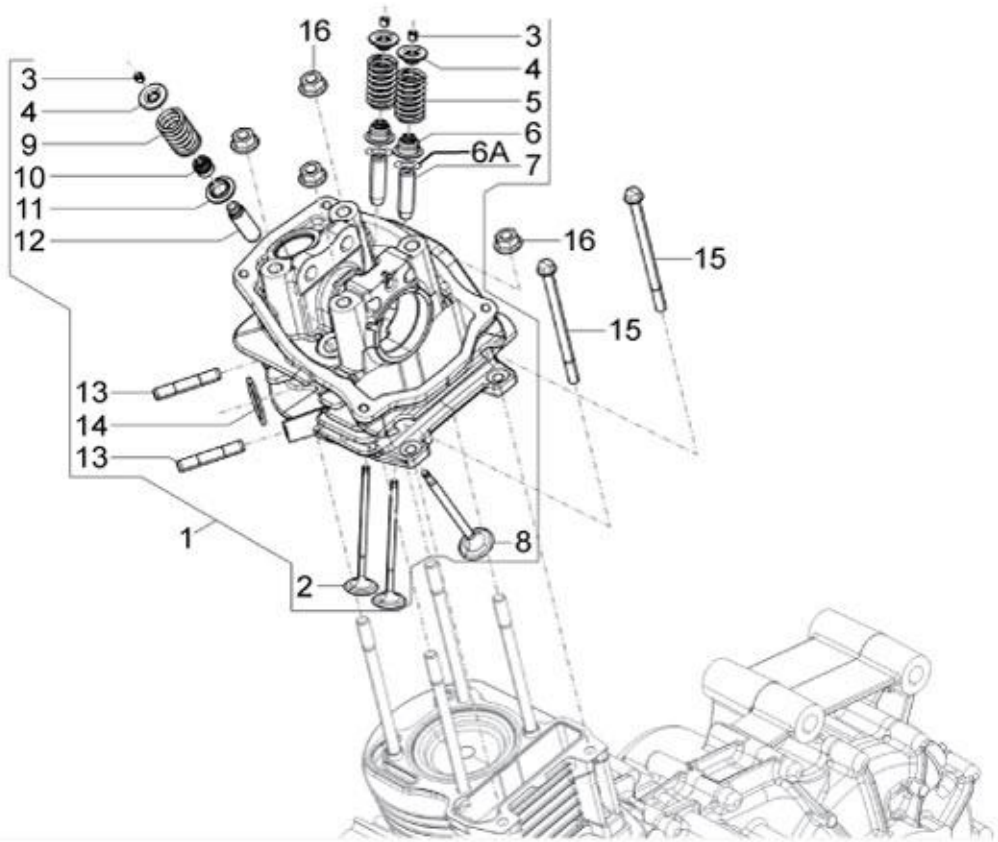
16
3
4
5
6
6A
7
3
4
9
10
11
12
16
15
15
13
14
13
1
8
2

11

Print Date: 07-Apr-2022

**PLATE-5**

**CYLINDER HEAD UNIT - VALVE**

| Fig. No. | Part No. | Description | Qty | Remarks |
|---|---|---|---|---|
| 1 | SP1A017573 | CYLINDER HEAD ASSY_SPD | 1 | |
| 2 | B014684 | INTAKE VALVE Ø20 | 2 | |
| 3 | B015288 | HALF-CONE | 6 | |
| 4 | B017456 | UPPER CUP | 3 | |
| 5 | B014706 | VALVE SPRING (INTAKE) | 1 | |
| 6 | 843307 | VALVE SEAL RING | 2 | |
| 6A | 1A012925 | SLIDING WASHER | 2 | |
| 7 | NS | NOT SERVICEABLE | 2 | |
| 8 | B017438 | EXHAUST VALVE Ø22 | 1 | |
| 9 | B014705 | VALVE SPRING (EXHAUST) | 1 | |
| 10 | 83054R | VALVE SEAL RING | 1 | |
| 11 | 483711 | LOWER CUP | 1 | |
| 12 | NS | NOT SERVICEABLE | 1 | |
| 13 | B016368 | SPECIAL STUD | 2 | |
| 14 | 434716 | CYLINDER HEAD/MUFFLER GASKET | 1 | |
| 15 | B018854 | HEXAGONAL HEAD FLANGED SCREW M6X90 | 2 | |
| 16 | B016939 | FLANGED NUT M8X1.25 | 4 | |
| 17 | KIT1U000020 | SET OF VALVES | 1 | NI (Consists Of Sr.NO.-2&8) |
| 18 | KIT95011R | VALVE SEAL RING SET | 1 | NI (Consists Of Sr.NO.-10&16) |

12

Print Date: 07-Apr-2022

**PLATE-6**

**ROCKER LEVERS SUPPORT UNIT**

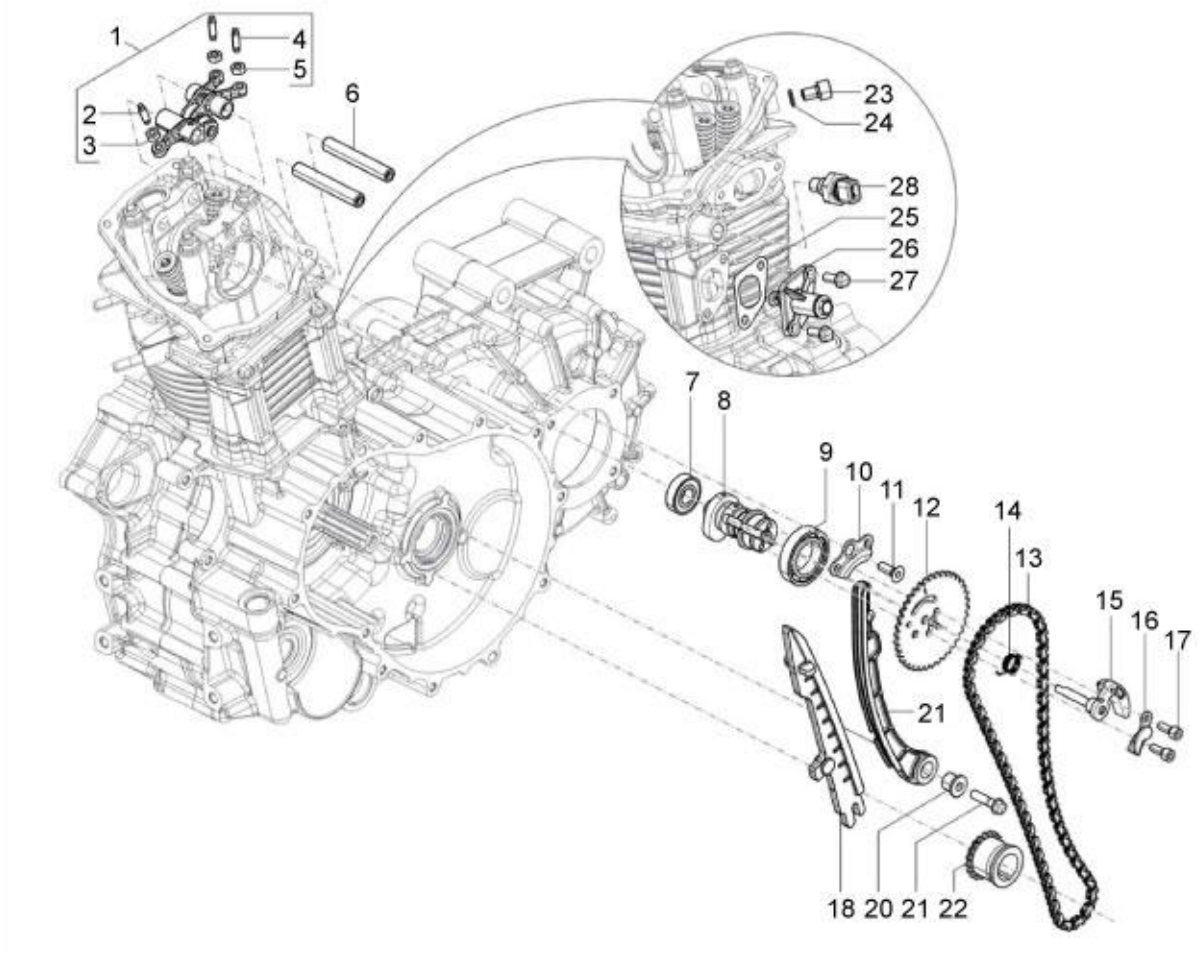
1
2
3
4
5
6
7
8
9
10
11
12
13
14
15
16
17
18
20
21
22
23
24
25
26
27
28

13

Print Date: 07-Apr-2022

**PLATE-6**

**ROCKER LEVERS SUPPORT UNIT**

| Fig. No. | Part No. | Description | Qty | Remarks |
|---|---|---|---|---|
| 1 | 1A013013 | ROCKER ARM GROUP | 1 | |
| 2 | B017323 | VALVE ADJUSTMENT SCREW | 1 | |
| 3 | B017431 | ROCKER ARM NUT | 1 | |
| 4 | B017323 | VALVE ADJUSTMENT SCREW | 2 | |
| 5 | B017431 | ROCKER ARM NUT | 2 | |
| 6 | B017113 | ROCKER ARM SHAFT | 2 | |
| 7 | 83040R | DEEP GROOVE BALL BEARING | 1 | |
| 8 | B017746 | CAMSHAFT WITH I.P. | 1 | |
| 9 | 83041R | DEEP GROOVE BALL BEARING | 1 | |
| 10 | B014760 | CAMSHAFT CONTAINMENT SHEET-STEEL | 1 | |
| 11 | B018946 | COUNTERSUNK SCREW M6X18 | 1 | |
| 12 | 1A002358 | TIMING CROWN | 1 | |
| 13 | B017746 | CAMSHAFT WITH I.P. | 1 | |
| 14 | B015483 | DECOMPRESSION SPRING | 1 | |
| 15 | SP1A006405 | CENTRIFUGAL MASS WITH I.P. | 1 | |
| 16 | 1A008397 | CENTRIFUGAL MASS CONTAINMENT SHEET | 1 | |
| 17 | B018718 | EXAG. SOCKET CYLIND.HEAD SCREW M5X14 | 2 | |
| 18 | 1A006899 | FIXED PAD | 1 | |
| 19 | 1A006901 | CHAIN TIGHTENING ROD | 1 | |
| 20 | 485868 | SPACER FOR CHAIN TIGHTNING ROD | 1 | |
| 21 | B016774 | FLANGED HEXAGONAL SCREW M6X25 | 1 | |
| 22 | 1A007565 | TIMING PINION | 1 | |
| 23 | 269755 | SOCKET HEAD SCREW (M8X12) | 1 | |
| 24 | 485703 | WASHER | 1 | |
| 25 | 847928 | CHAIN SUPPORT GASKET | 1 | |
| 26 | B017165 | CHAIN TENSIONER DEVICE | 1 | |
| 27 | 434541 | SCREW | 2 | |
| 28 | 58273R | THERMIC SENSOR | 1 | Not Applicable |
| 29 | KIT95012R | CENTRIFUGAL MASS KIT | 1 | NS |

**14**

Print Date: 07-Apr-2022

**PLATE-7**
**CYLINDER HEAD COVER**

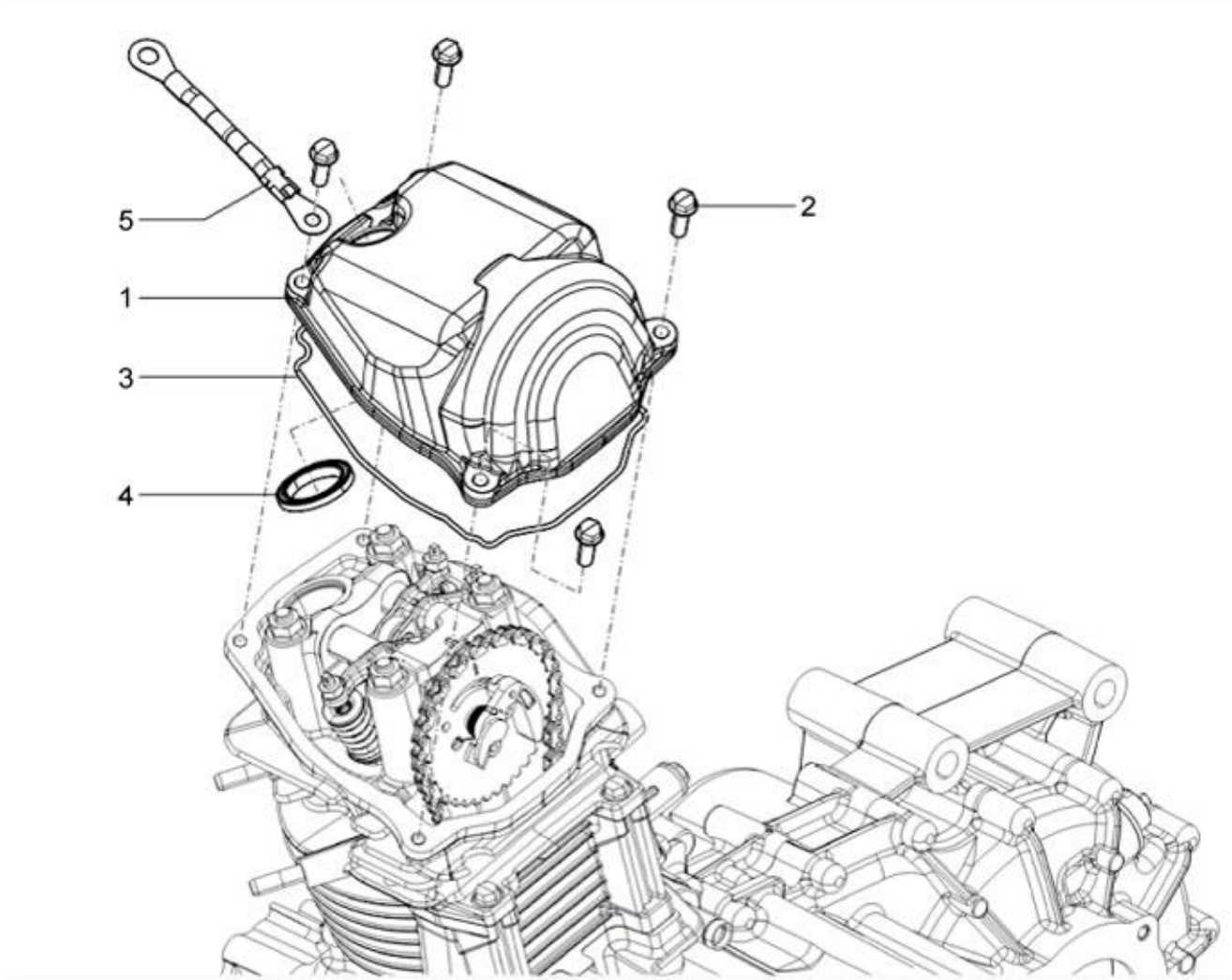
5
1
3
4
2

15

Print Date: 07-Apr-2022

**PLATE-7**
**CYLINDER HEAD COVER**

| Fig. No. | Part No. | Description | Qty | Remarks |
|---|---|---|---|---|
| 1 | 1A006545 | HEAD COVER | 1 | |
| 2 | 018639 | SCREW M6X20 | 4 | |
| 3 | B018533 | CYLINDER HEAD COVER GASKET | 1 | |
| 4 | B014732 | SPARK PLUG HOLE GASKET | 1 | |
| 5 | 1D001894 | GROUND WIRE | 1 | |

**16**

Print Date: 07-Apr-2022

**PLATE-8**
**OIL PUMP**

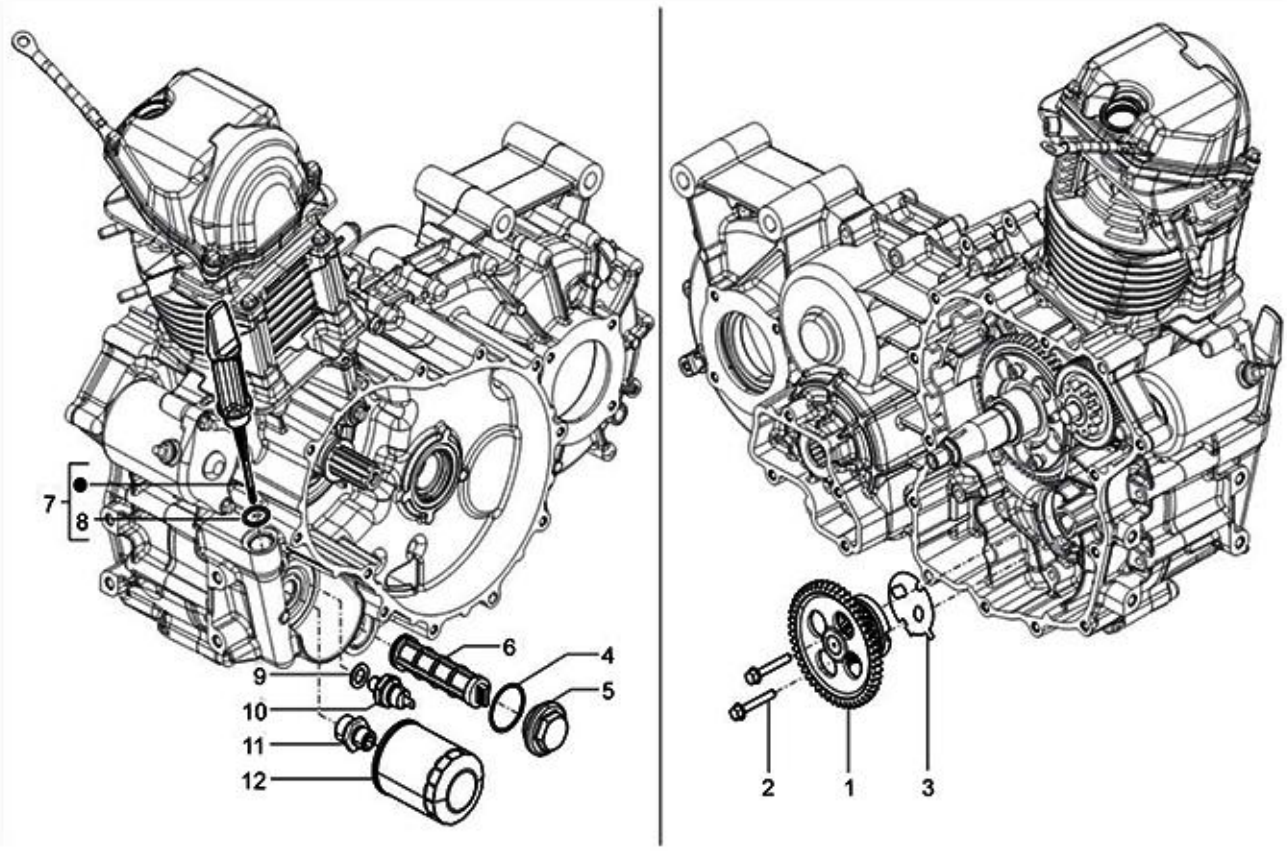
7
8
6
4
5
9
10
11
12
2
1
3

17

Print Date: 07-Apr-2022

**PLATE-8**
**OIL PUMP**

| Fig. No. | Part No. | Description | Qty | Remarks |
|---|---|---|---|---|
| 1 | 1A006877 | OIL PUMP ASSY | 1 | |
| 2 | 1A016737 | FLANGED HEXAGONAL HEAD SCREW | 2 | |
| 3 | B015943 | CRANKCASE/ OIL PUMP GASKET | 1 | |
| 4 | 285536 | O-RING GASKET 31.47X1.78 | 1 | |
| 5 | B015598 | OIL FILTER PLUG | 1 | |
| 6 | 1A006812 | COMPLETE INTAKE OIL FILTER | 1 | |
| 7 | 1A007047 | OIL DIPSTICK COMPLETE | 1 | |
| 8 | 479986 | O-RING GASKET | 1 | |
| 9 | 1A011500 | WASHER | 1 | |
| 10 | 1D001138 | MINIMUM PRESSURE OIL SWITCH | 1 | |
| 11 | 1A009762 | OIL FILTER SCREW | 1 | |
| 12 | 82635R | COMPLETE OIL FILTER | 1 | |

**18**

Print Date: 07-Apr-2022

**PLATE-9**

**STARTER - ELECTRIC STARTER**

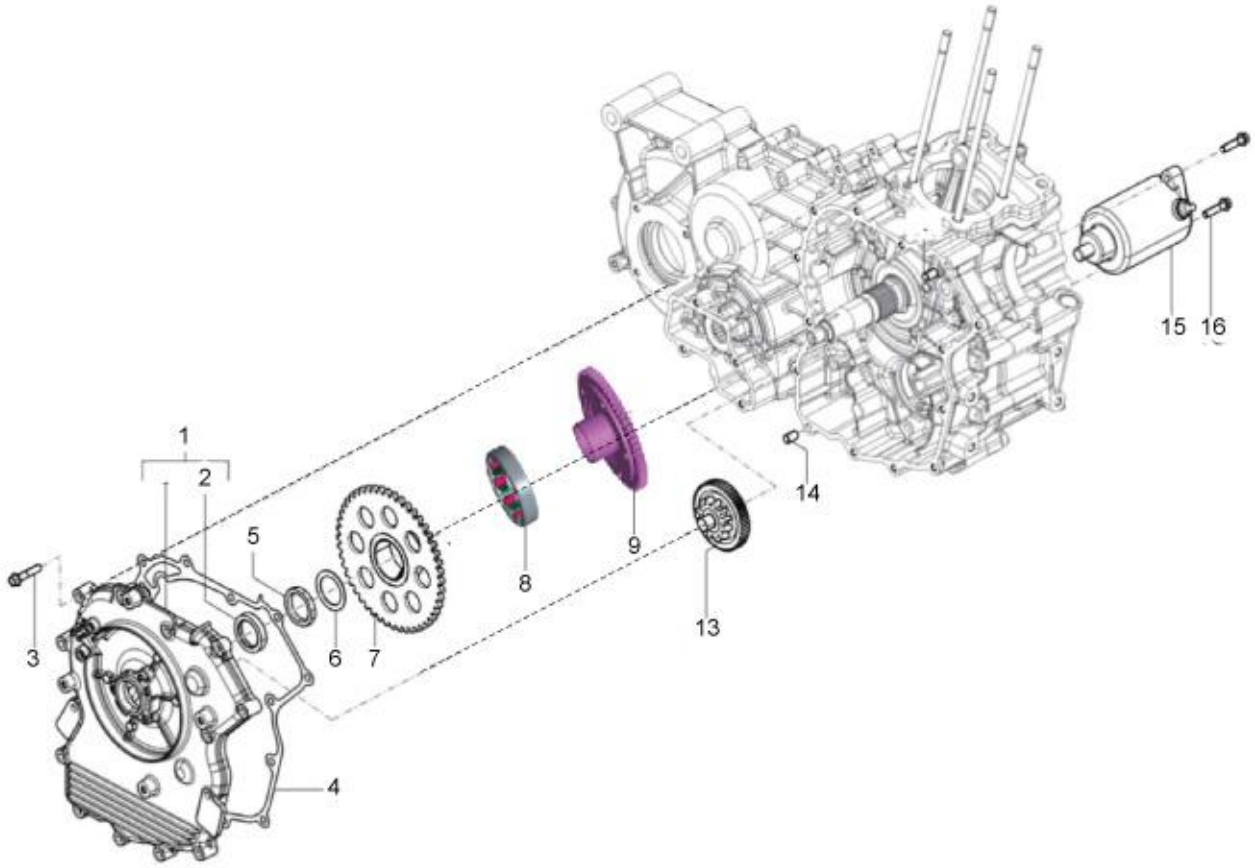
1
2
3
4
5
6
7
8
9
13
14
15
16

19

Print Date: 07-Apr-2022

**PLATE-9**

**STARTER - ELECTRIC STARTER**

| Fig. No. | Part No. | Description | Qty | Remarks |
|---|---|---|---|---|
| 1 | SP1A007045 | STARTER COVER WITH I.P. | 1 | |
| 2 | B016120 | SEAL RING 25X35X7 | 1 | |
| 3 | B018853 | FLANGED HEXAGONAL HEAD SCREW M6X30 | 14 | |
| 4 | 1A006858 | STARTER COVER GASKET | 1 | |
| 5 | 1A021204 | RING NUT | 1 | |
| 6 | B016148 | WASHER | 1 | |
| 7 | 1A018038 | CROWN ELECTRIC STARTER WITH I.P. | 1 | |
| 8 | 1A020456 | ONE WAY CLUTCH ASSY | 1 | |
| 9 | 1A018212 | CUM CLUTCH HUB | 1 | |
| 10 | 1A009592 | O-RING KIT | 1 | NI |
| 11 | 1A009593 | THRUST WASHER KIT | 1 | NI |
| 12 | SP41A020456 | ONE WAY CLUTCH HUB ASSY - 230CC SPD | 1 | Consists of Part 7,8 & 9 |
| 13 | B017189 | ELECTRIC STARTER INTERMED GEAR WITH P.I. | 1 | |
| 14 | 1A000708 | DOWEL (Ø7,5, H=12) | 2 | |
| 15 | 1A018642R | ELECTRIC STARTER MOTOR | 1 | |
| 16 | B016774 | FLANGED HEXAGONAL SCREW M6X25 | 2 | |
| 17 | 1A009591 | HEXAG. HEAD SCREW | 1 | NI |
| 18 | 1A009586 | REAR BRACKET ASSY | 1 | NI |
| 19 | 1A009587 | BRUSH ASSLY KIT (+VE & -VE) | 1 | NI |
| 20 | 1A009588 | ARMATURE ASSLY | 1 | NI |
| 21 | 1A009589 | YOKE ASSLY | 1 | NI |
| 22 | 1A009590 | FRONT BRACKET ASSLY | 1 | NI |

**20**

Print Date: 07-Apr-2022

**PLATE-10**

**FLYWHEEL_A.C GENERATOR ASSY.**

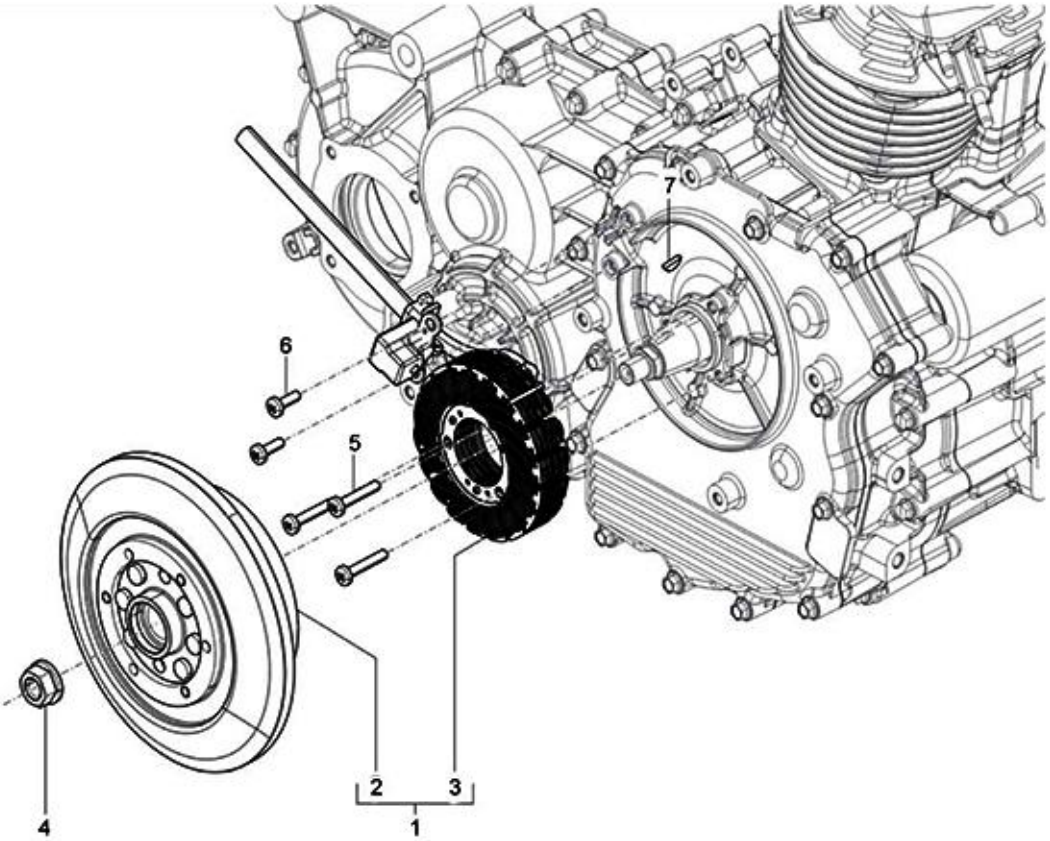
7
6
5
2
3
1
4

21

Print Date: 07-Apr-2022

**PLATE-10**

**FLYWHEEL_A.C GENERATOR ASSY.**

| Fig. No. | Part No. | Description | Qty | Remarks |
|---|---|---|---|---|
| 1 | 1D001847 | COMPLETE A.C.GENERATOR | 1 | |
| 2 | 1A008672 | ROTAR ASSY WITH HUB | 1 | |
| 3 | 1D001846 | COMPLETE STATOR | 1 | |
| 4 | 1A006988 | NUT WITH SPRING WASHER | 1 | |
| 5 | 1A001073 | TORX HEAD SCREW M5X16 | 3 | |
| 6 | 1A013159 | TORX HEAD SCREW M5X22 | 2 | |
| 7 | 000267 | WOODRUFF KEY | 1 | NI |

22

Print Date: 07-Apr-2022

**PLATE-11**

**FAN COVER & SHROUD ASSY.**

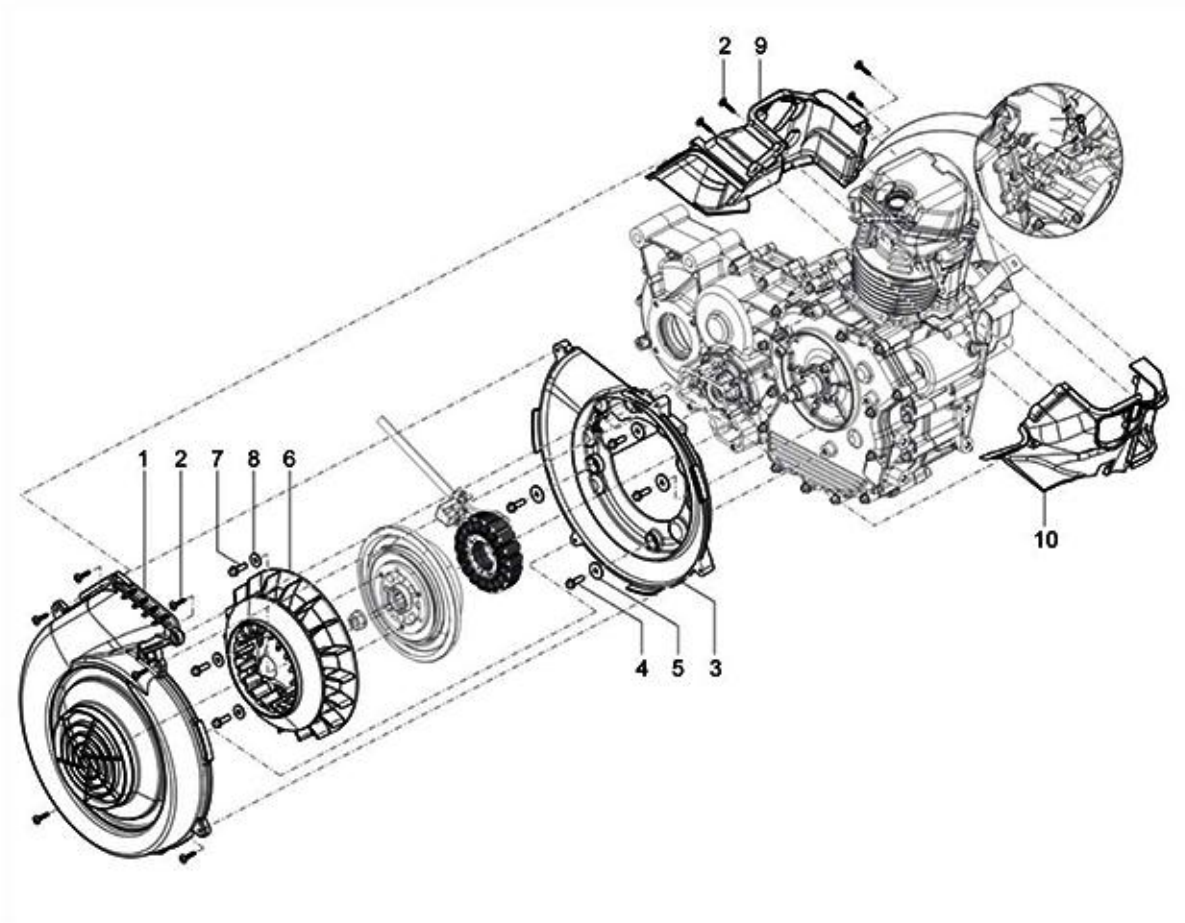
2
9
1
2
7
8
6
10
4
5
3

23

Print Date: 07-Apr-2022

**PLATE-11**

**FAN COVER & SHROUD ASSY.**

| Fig. No. | Part No. | Description | Qty | Remarks |
|---|---|---|---|---|
| 1 | 1A010001 | FAN COVER | 1 | |
| 2 | 1A000024 | SELF TAPPING SCREW (3X20) | 10 | |
| 3 | 1A006742 | FAN COVER SUPPORT | 1 | |
| 4 | 018639 | SCREW M6X20 | 4 | |
| 5 | B016192 | WASHER 6.2X20X2 | 4 | |
| 6 | 1A000831 | ASSY FAN | 1 | |
| 7 | 1A002691 | FLANGED HEX HEAD SCREW M6X20 CL10 | 3 | |
| 8 | B019047 | WASHER | 3 | |
| 9 | 1A006743 | COMPLETE SHROUD INTAKE SIDE | 1 | |
| 10 | 1A006740 | SHROUD EXHAUST SIDE | 1 | |
| 11 | B016620 | SCREW WITH CYLINDRICAL HEAD M5X21 | 1 | |

24

Print Date: 07-Apr-2022

**PLATE-12**

**GEAR-BOX COMPONENTS & GEAR SHIFTER**

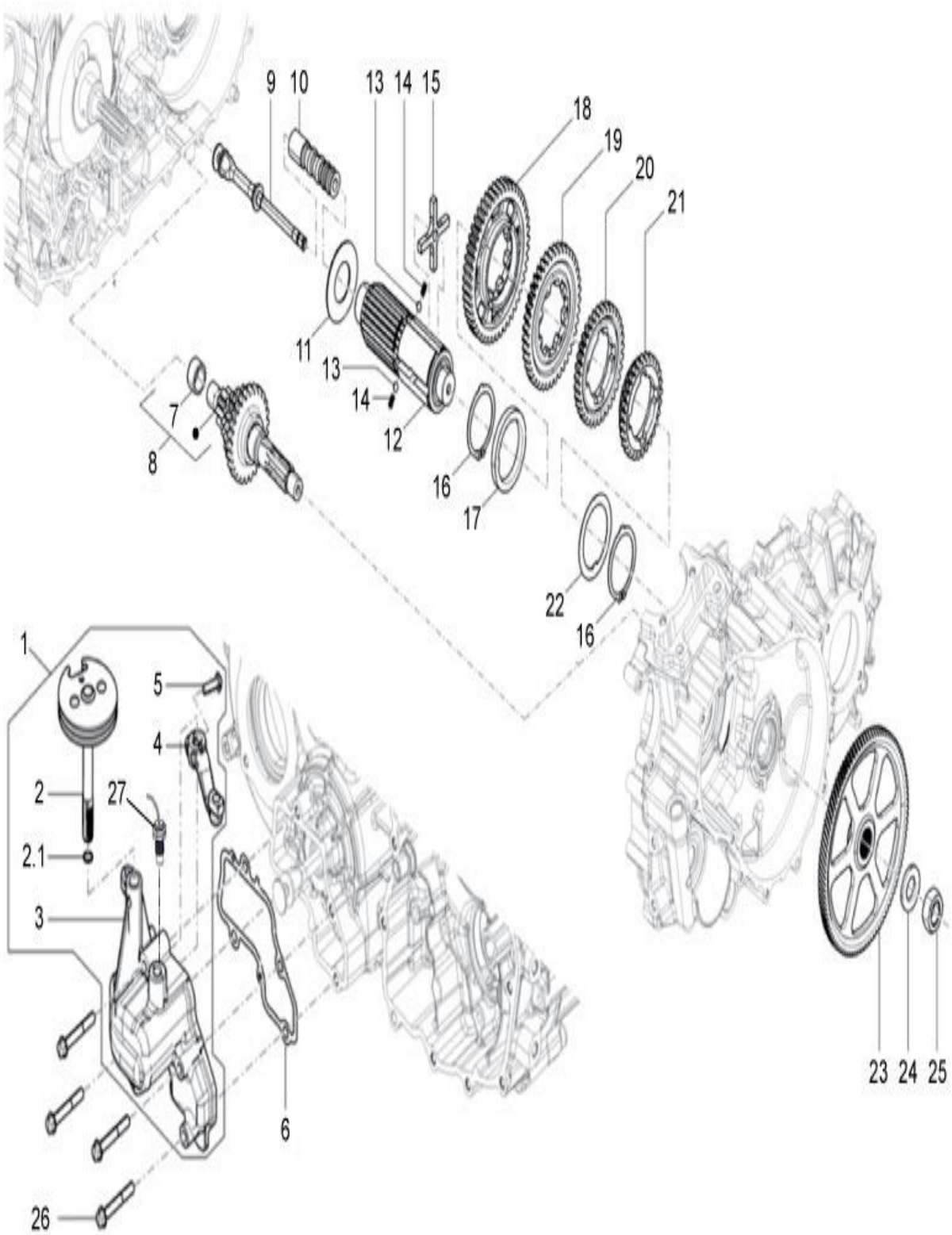
9
10
13
14
15
18
19
20
21
11
13
14
12
7
8
16
17
22
16
1
5
4
2
27
2.1
3
6
26
23
24
25

25

Print Date: 07-Apr-2022

**PLATE-12**

**GEAR-BOX COMPONENTS & GEAR SHIFTER**

| Fig. No. | Part No. | Description | Qty | Remarks |
|---|---|---|---|---|
| 1 | SP1A011650 | COMPLETE GEAR SHIFTER ASSY | 1 | |
| 2 | 1A010035 | COMPLETE SECTOR WITH SHAFT | 1 | |
| 2.1 | 1A005178 | O- RING | 1 | |
| 3 | 1A012182 | GEAR SHIFTER HOUSING | 1 | |
| 4 | SP1A007579 | COMPL. INVERTER LEVER SECTOR(BSIV)- SPD | 1 | |
| 5 | 1A001073 | TORX HEAD SCREW M5X16 | 1 | |
| 6 | 1A012334 | GASKET GEAR SHIFTER HOUSING | 1 | |
| 7 | 122032014 | INNER RING - CLUSTER GEAR | 1 | |
| 8 | SP1A014870 | CLUSTER GEAR WITH I.P. | 1 | |
| 9 | 1A012181 | STEM | 1 | |
| 10 | 1A012846 | BUSH GEAR SHIFTER | 1 | |
| 11 | 1A007029 | LOCK WASHER | 1 | |
| 12 | 1A017112 | SECONDARY GEAR SHAFT | 1 | |
| 13 | 002139 | BALL | 2 | |
| 14 | 1A006970 | SPRING | 2 | |
| 15 | 1A010166 | CROSS | 1 | |
| 16 | 009101 | SEEGER RING | 2 | |
| 17 | 1A006701 | LOCK WASHER | 1 | |
| 18 | 1A014871 | SPEED GEAR 1ST | 1 | |
| 19 | 1A014872 | SPEED GEAR 2ND | 1 | |
| 20 | 1A014873 | SPEED GEAR 3RD | 1 | |
| 21 | 1A014874 | SPEED GEAR 4TH | 1 | |
| 22 | 1A006115 | LOCK WASHER | 1 | |
| 23 | NS | NOT SERVICEABLE | 1 | |
| 24 | B018464 | BELLEVILLE SPRING | 1 | |
| 25 | 21118 | HEX NUT M18 X 1.5P | 1 | |
| 26 | B016611 | FLANGED HEX. HEAD SCREW M6X45 CL10 | 4 | |
| 27 | 1A010016 | NEUTRAL SWITCH | 1 | |

**26**

Print Date: 07-Apr-2022

**PLATE-13**

**CLUTCH ASSY & CLUTCH COVER**

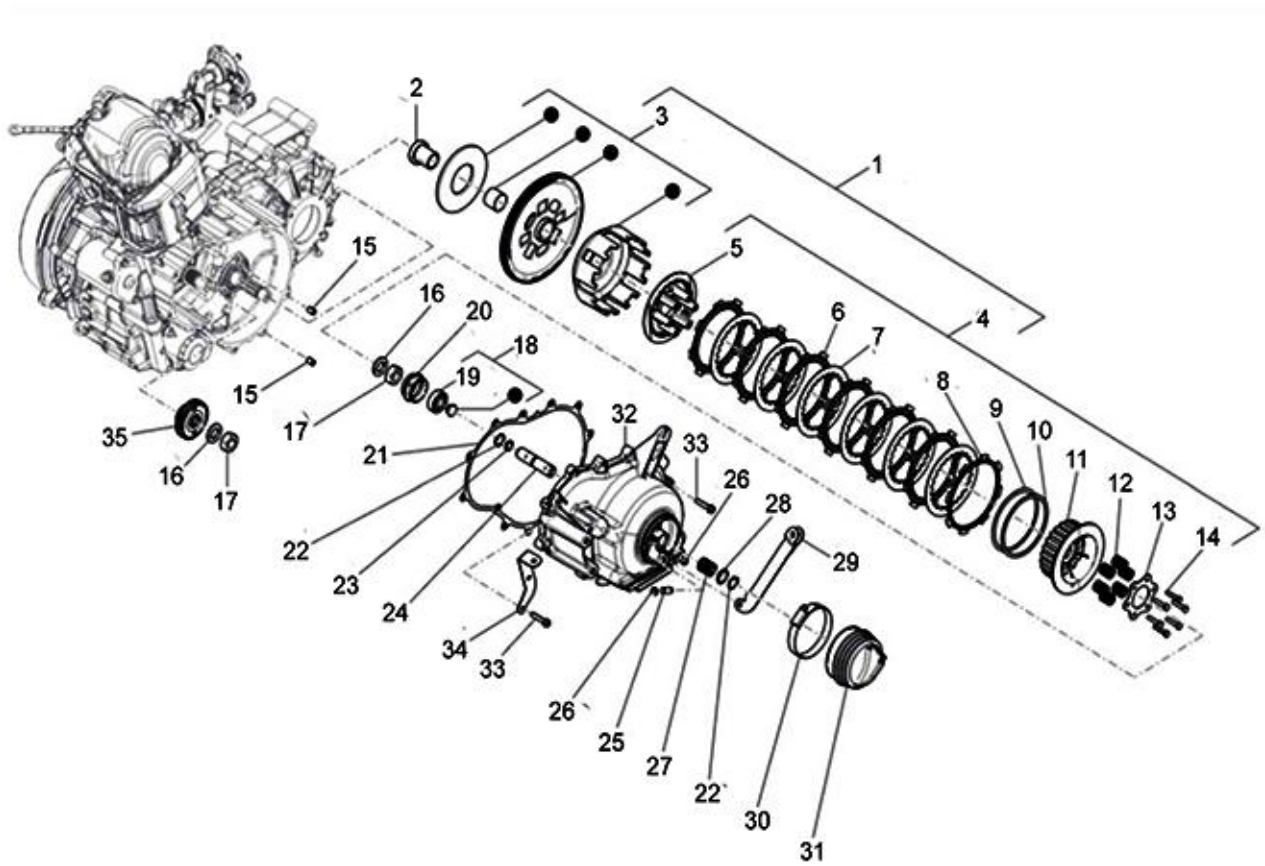
1
2
3
4
5
6
7
8
9
10
11
12
13
14
15
15
16
16
17
17
18
19
20
21
22
22
23
24
25
26
26
27
28
29
30
31
32
33
33
34
35

27

Print Date: 07-Apr-2022

**PLATE-13**

**CLUTCH ASSY & CLUTCH COVER**

| Fig. No. | Part No. | Description | Qty | Remarks |
|---|---|---|---|---|
| 1 | 1A010119 | CLUTCH ASSY | 1 | |
| 2 | 1A010461 | SPACER | 1 | |
| 3 | 1A012150 | HOUSING CLUTCH ASSY | 1 | |
| 4 | 1A012151 | PLATE CLUTCH ASSY | 1 | |
| 5 | 1A008715 | CUM CLUTCH HUB | 1 | |
| 6 | 1A012153 | FRICTION PLATE | 6 | |
| 7 | 1A012155 | PLATE CLUTCH | 6 | |
| 8 | 1A012154 | RED FRICTION PLATE | 1 | |
| 9 | 1A012159 | ANTI-JUDDER SPRING | 1 | |
| 10 | 1A012160 | ANTI-JUDDER WASHER | 1 | |
| 11 | 1A012157 | WHEEL CLUTCH | 1 | |
| 12 | 1A012156 | COMPRESSION SPRING | 6 | |
| 13 | 1A012158 | HOLDER CLUTCH | 1 | |
| 14 | 1A012161 | BOLT M5 | 1 | |
| 15 | 1A000708 | DOWEL (Ø7,5, H=12) | 2 | |
| 16 | B018464 | BELLEVILLE SPRING | 2 | |
| 17 | 1A012845 | HEX. NUT M16X1.25 | 2 | |
| 18 | SP1A010560 | CLUTCH PRESSURE BUSH WITH I.P. | 1 | |
| 19 | 478261 | PULLEY SHAFT BEARING | 1 | |
| 20 | 1A010540 | CLUTCH PRESSURE PLATE | 1 | |
| 21 | 1A011940 | CLUTCH COVER GASKET | 1 | |
| 22 | 842001600 | CIRCLIP DIA.16(EXT) | 2 | |
| 23 | B019220 | O- RING (PLUNGER SHAFT) | 1 | |
| 24 | 1A010548 | PLUNGER SHAFT | 1 | |
| 25 | 127013013 | PIN CLUTCH | 1 | |
| 26 | 843000809 | CIRCLIP DIA.8(EXT) TYPE C | 2 | |
| 27 | 127185012 | SPRING - CLUTCH COVER | 1 | |
| 28 | 120164019 | RETAINING PLATE | 1 | |
| 29 | 127460010 | LINK ASSLY - CLUTCH (IMPROVED) | 1 | |
| 30 | 120170018 | HOSE CLIP - CLUTCH COVER BELOW | 1 | |
| 31 | 127012019 | BELLOW CLUTCH ACTUATING | 1 | |
| 32 | 1A010136 | CLUTCH COVER | 1 | |
| 33 | B018853 | FLANGED HEXAGONAL HEAD SCREW M6X30 | 12 | |
| 34 | 1A008077 | SUPPORT BRACKET STARTER MOTOR CABLE | 1 | |
| 35 | 1A010208 | ENGINE GEAR | 1 | |

**28**

Print Date: 07-Apr-2022

**PLATE-13**

**CLUTCH ASSY & CLUTCH COVER**

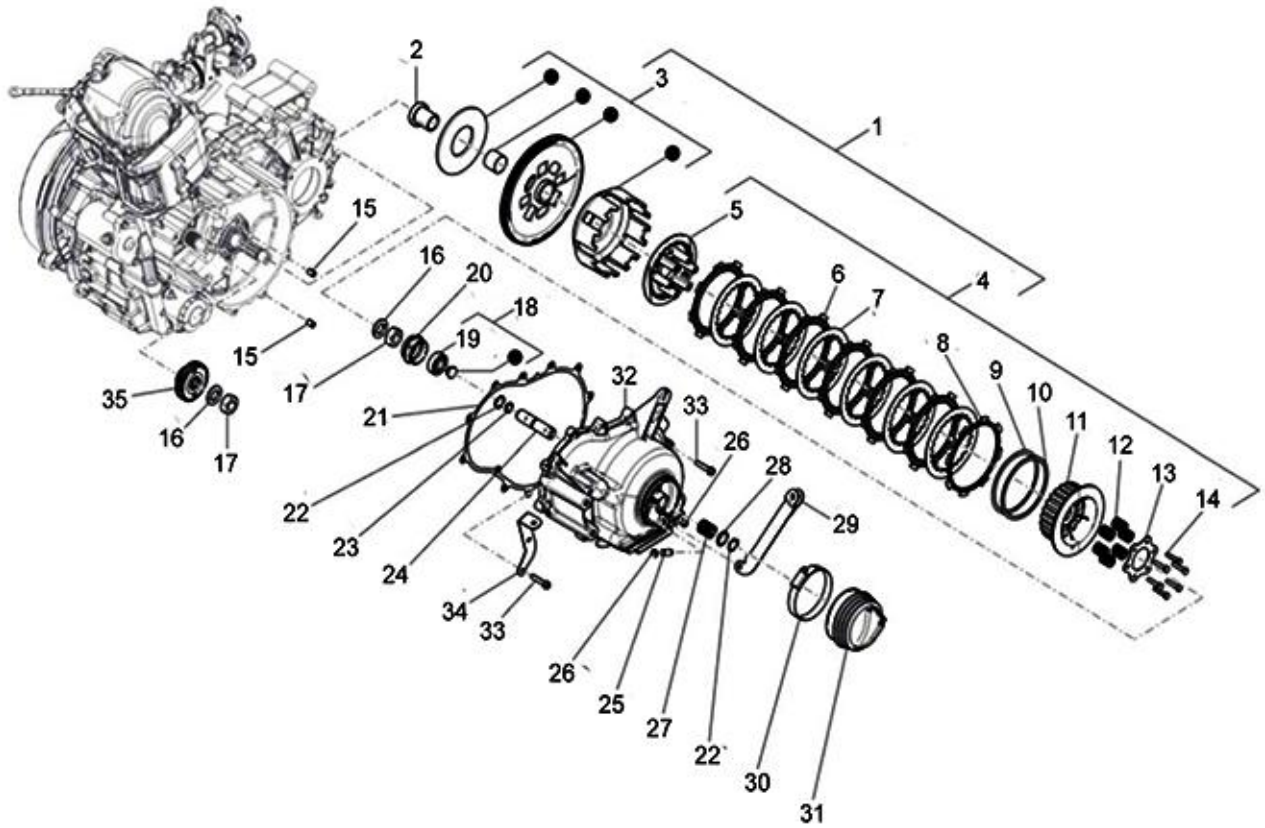
1
2
3
4
5
6
7
8
9
10
11
12
13
14
15
15
16
16
17
17
18
19
20
21
22
22
23
24
25
26
26
27
28
29
30
31
32
33
33
34
35

29

Print Date: 07-Apr-2022

**PLATE-13**

**CLUTCH ASSY & CLUTCH COVER**

| Fig. No. | Part No. | Description | Qty | Remarks |
|---|---|---|---|---|
| 36 | KIT95131R | KIT CLUTCH PLATE SET FOR STEP-2 ENG. AF | 1 | Complete Clutch Plate Set (NI |

**30**

Print Date: 07-Apr-2022

**PLATE-14**
**DIFFERENTIAL**

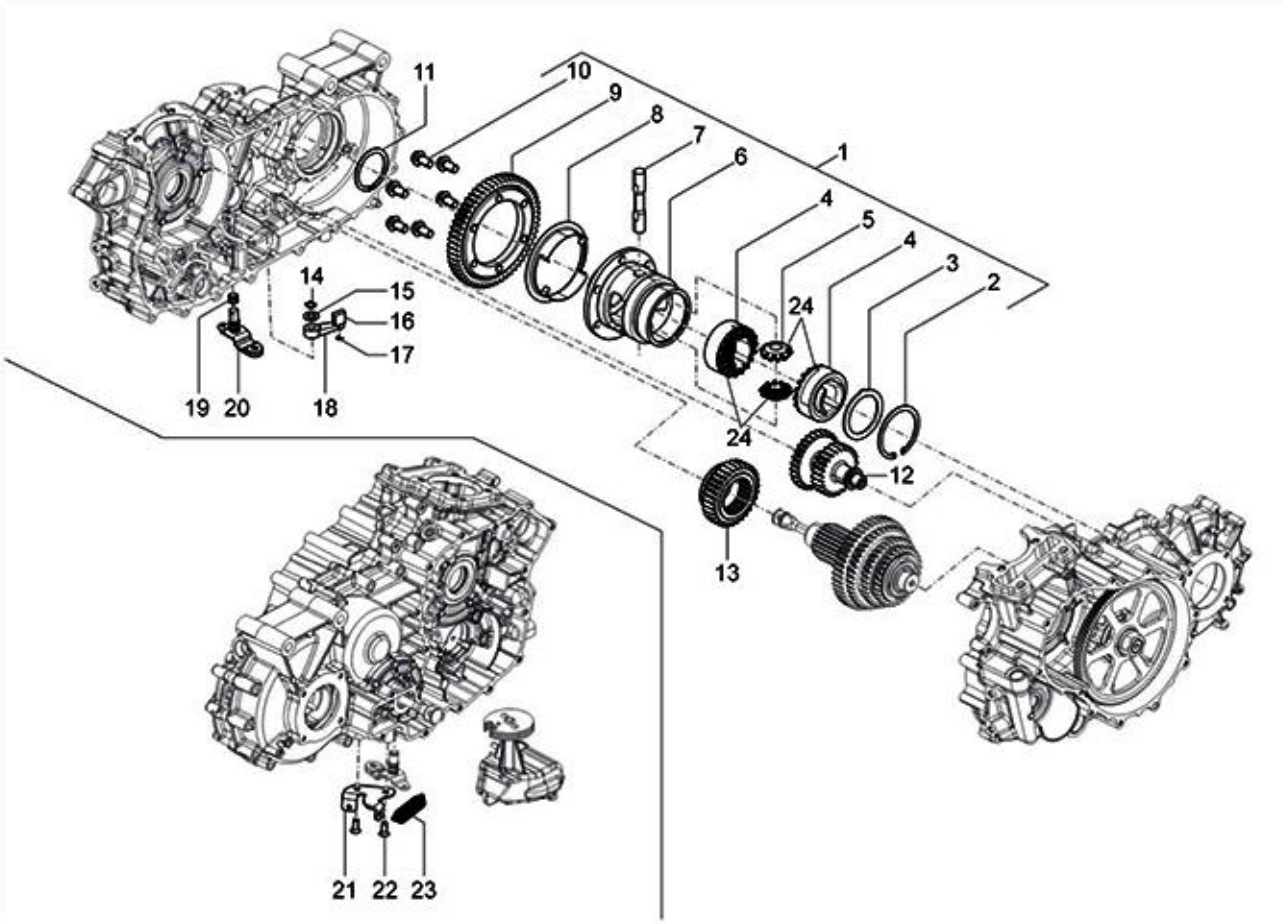
11
10
9
8
7
6
1
4
5
4
3
2
14
15
16
17
24
19
20
18
24
12
13
21
22
23

31

Print Date: 07-Apr-2022

**PLATE-14**
**DIFFERENTIAL**

| Fig. No. | Part No. | Description | Qty | Remarks |
|---|---|---|---|---|
| 1 | SPCM308402 | COMPLETE DIFFERENTIAL GEAR | 1 | PTL |
| 2 | 132134 | CIRCLIP | 1 | |
| 3 | 220575 | WASHER 65X3 | 1 | |
| 4 | 132136R | GEAR SUN | 2 | SERVICE IN SET (940028) |
| 5 | 165155R | DIFFERENTIAL GEAR | 2 | SERVICE INSET (940028) |
| 6 | 288730 | DIFFERENTIAL CAGE | 1 | |
| 7 | 132129 | PIN | 1 | |
| 8 | 1A011778 | SATELLITE PIN RETAINER | 1 | |
| 8A | 1A000612 | RETAINER SCREW - PRE COATED | 2 | |
| 9 | CM308302 | DIFFERENTIAL CROWN | 1 | PTL |
| 10 | 1A004807 | SCREW | 6 | |
| 11 | 6450 | EXT CIRCLIP DIA 48 | 1 | |
| 12 | 1A008547 | REVERSE GEAR- CNG | 1 | PTL |
| 13 | 1A010632 | SLIDING GEAR | 1 | PTL |
| 14 | 006410 | CIRCLIP | 1 | |
| 15 | 1A007501 | PLANE WASHER | 1 | |
| 16 | 1A007051 | SLIDER | 1 | PTL |
| 17 | 843000500 | CIRCLIP DIA.5 (EXT) TYPE C | 1 | |
| 18 | 1A007605 | GEAR SHIFTER LEVER | 1 | |
| 19 | 1A005176 | O- RING | 2 | |
| 20 | 1A009093 | INVERTER LEVER SECTOR WITH P.I. | 1 | |
| 21 | 1A008804 | REVERSE CABLE REACTION BRACKET | 1 | |
| 22 | 1A016964 | CSK PHILIPS HEAD SCREW | 2 | |
| 23 | 127111011 | REVERSE GEAR SPRING | 1 | |
| 24 | 940028 | GEAR SUN AND DIFFERENTIAL GEAR | 1 | |

32

Print Date: 07-Apr-2022

**PLATE-15**

**AIR FILTER & INTAKE SYSTEM**

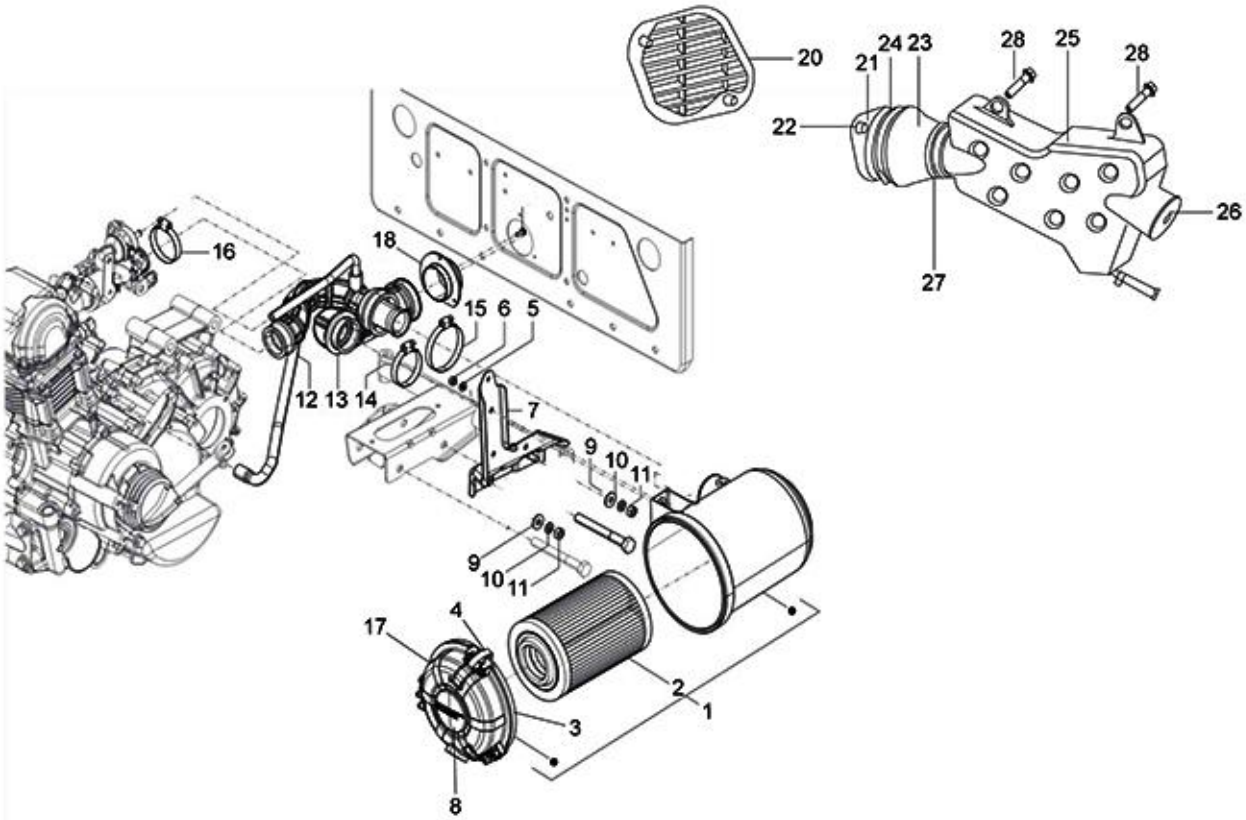
20
21
24
23
28
25
28
22
26
27
16
18
15
6
5
12
13
14
7
9
10
11
9
10
11
4
17
2
1
3
8

33

Print Date: 07-Apr-2022

**PLATE-15**

**AIR FILTER & INTAKE SYSTEM**

| Fig. No. | Part No. | Description | Qty | Remarks |
|---|---|---|---|---|
| 1 | B073441 | AIR FILTER ASSLY.W/O BKT | 1 | |
| 2 | B076112 | AIR FILTER ELEMENT | 1 | |
| 3 | 940072 | AIR FILTER COVER GASKET | 1 | |
| 4 | 920088 | CLAMP | 3 | |
| 5 | 016406 | SPRING WASHER | 1 | |
| 6 | 20106 | HEX NUT M6 | 1 | |
| 7 | B076111 | BRACKET AIR FILTER SUPPORT COMPLETE | 1 | Under Development |
| 8 | 940071 | DUST VALVE | 1 | |
| 9 | 2383 | PLAIN WASHER M20X8.5X2 | 2 | |
| 10 | 016408 | SPRING WASHER | 2 | |
| 11 | 20108 | HEX NUT M8 | 2 | |
| 12 | 1A007488 | CARBURATOR /AIR BOX COUPLING | 1 | |
| 13 | 1A007489 | AIR CLEANER/VEHICLE MANIFOLD | 1 | |
| 14 | 604756 | HOSE CLIP | 1 | |
| 15 | 604553 | WORM CLIP | 1 | |
| 16 | 604756 | HOSE CLIP | 1 | |
| 17 | 940069 | AIR FILTER COVER-(UG) | 1 | |
| 18 | 6A000200 | AIR RESTRICTOR | 1 | |
| 19 | 660168 | PAN SELF TP. SCREW 10 SGX13AB | 3 | |
| 20 | B074971 | INTAKE GRILL FOR SNORKEL SYSTEM | 1 | |
| 21 | B074970 | ADAPTER FOR SNORKEL AIR INTAKE | 1 | |
| 22 | D9004159230 | SCREW, W / WASHER | 1 | |
| 23 | 1A006592 | AIR CLEANER/VEHICLE MANIFOLD | 1 | |
| 24 | 1A007153 | HOSE CLAMP | 1 | |
| 25 | 1A006593 | PIPE COOL AIR INTAKE | 1 | |
| 26 | 1A007635 | DAMPING RING | 1 | |
| 27 | B076918 | HOSE CLIP (FORDIA 42-55) | 1 | |
| 28 | 645037 | HEX HEAD SCREW M8 X 22 CL 8.8 | 3 | |

34

Print Date: 07-Apr-2022

**PLATE-16**

**INTAKE FITTING - CARBURETOR**

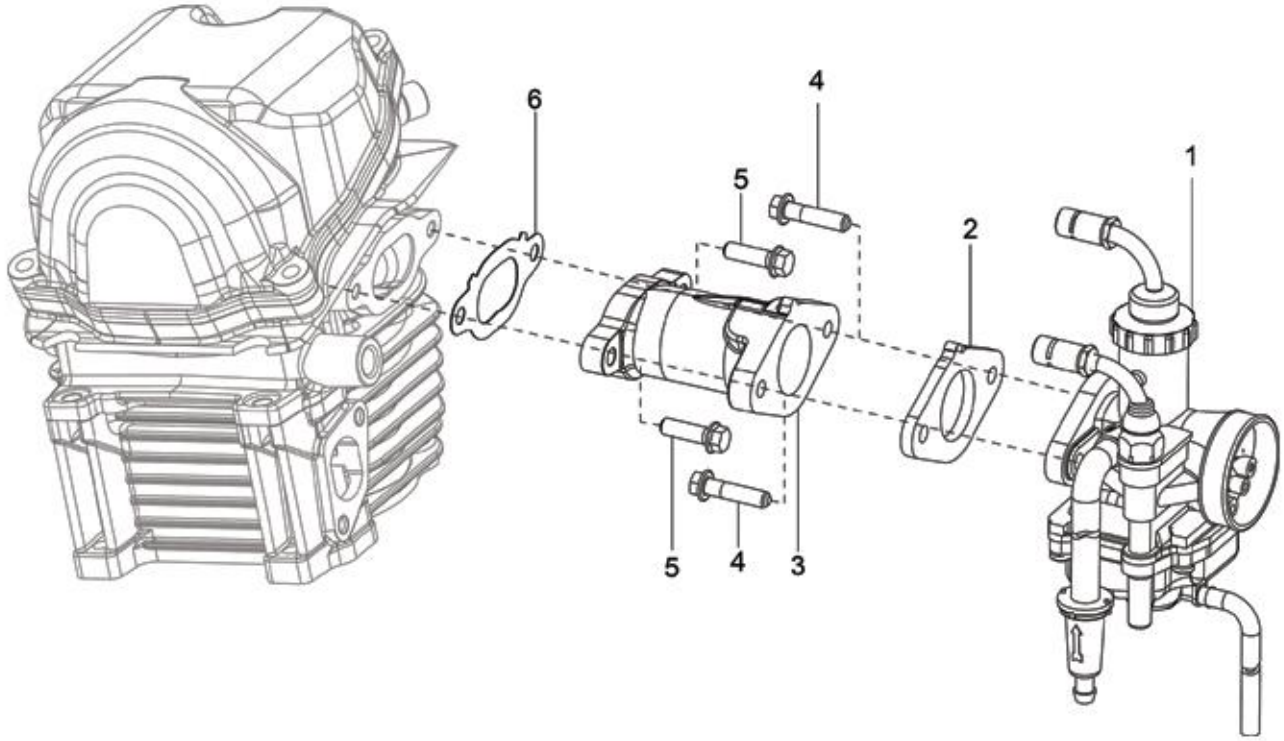
6
4
5
1
2
5
4
3

35

Print Date: 07-Apr-2022

**PLATE-16**

**INTAKE FITTING - CARBURETOR**

| Fig. No. | Part No. | Description | Qty | Remarks |
|---|---|---|---|---|
| 1 | CM284102 | CARBURETOR-PTL | 1 | PTL |
| 2 | B015543 | COMPLETE INTAKE FITTING SUPPORT | 2 | PTL |
| 3 | 1A009632 | INTAKE FITTING-PLT | 1 | |
| 4 | B016774 | FLANGED HEXAGONAL SCREW M6X25 | 2 | |
| 5 | 018639 | SCREW M6X20 | 1 | |
| 6 | B018442 | INTAKE FITTING GASKET | 2 | |

**36**

Print Date: 07-Apr-2022

**PLATE-17**
**SILENCER**

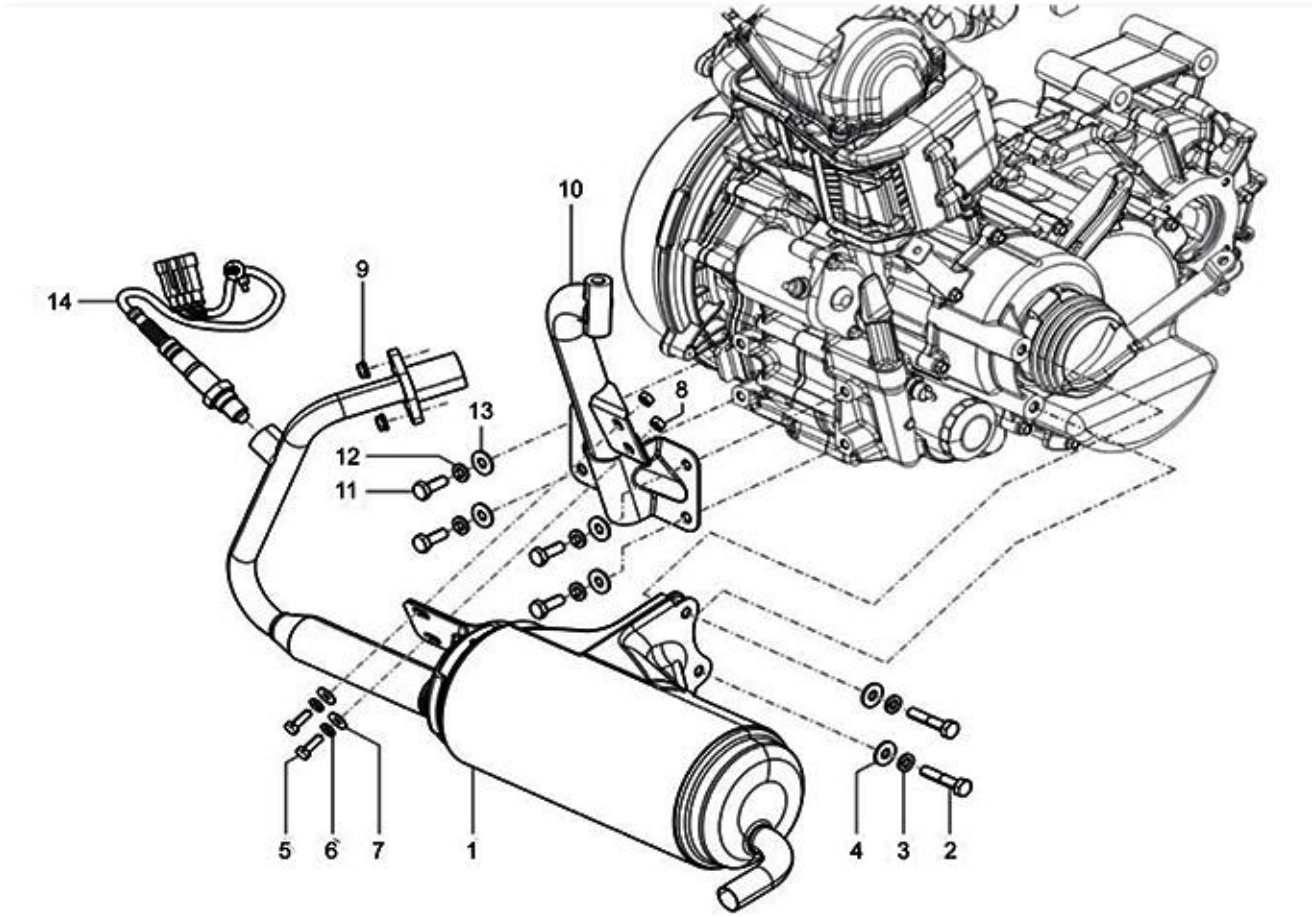
10
9
14
8
13
12
11
5
6
7
1
4
3
2

37

Print Date: 07-Apr-2022

**PLATE-17**
**SILENCER**

| Fig. No. | Part No. | Description | Qty | Remarks |
|---|---|---|---|---|
| 1 | 1A021042 | COMPLETE MUFFLER | 1 | |
| 2 | 30074 | HEX HEAD BOLT M8 X 40 CL 8.8 | 2 | |
| 3 | 16408 | SPRING WASHER M8 | 2 | |
| 4 | 2383 | PLAIN WASHER M20X8.5X2 | 2 | |
| 5 | 31089 | HEX HEAD SCREW M6X18 CL 8.8 | 2 | |
| 6 | 16406 | SPRING WASHER M6 OD12 | 2 | |
| 7 | 13880 | METALIC PLAIN WASHER | 2 | |
| 8 | 20106 | HEX NUT M6 | 2 | |
| 9 | 436947 | FLANGED NUT M7X1 H=8 | 2 | |
| 10 | B075593 | BKT SUB ASSLY ENGINE SUPPORT REAR | 1 | |
| 11 | B076143 | HEX HEAD BOLT M8 X 25 | 4 | |
| 12 | 16408 | SPRING WASHER M8 | 4 | |
| 13 | 2383 | PLAIN WASHER M20X8.5X2 | 4 | |
| 14 | 1A014335 | LAMBDA SENSOR | 1 | Not Applicable |

38

Print Date: 07-Apr-2022

**PLATE-18**
**COMPLETE H.T. COIL**

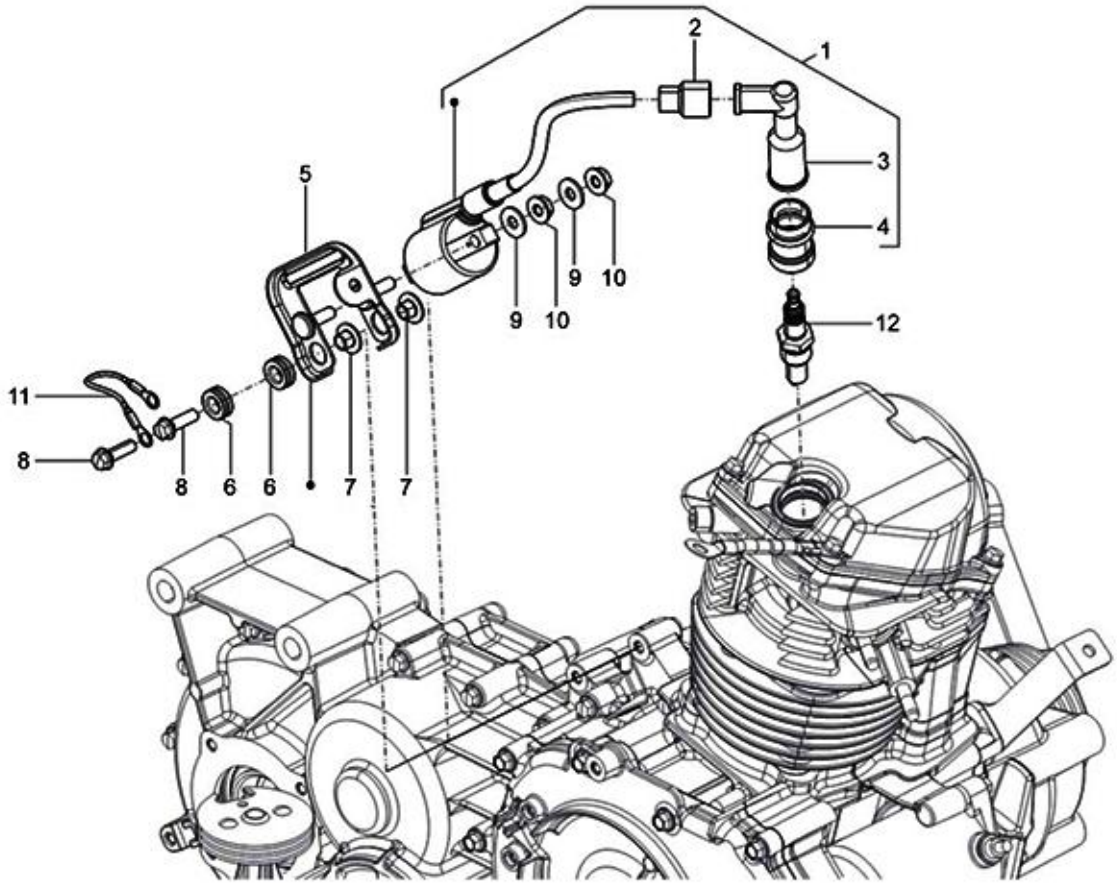
1
2
3
4
5
6
6
7
7
8
8
9
9
10
10
11
12

39

Print Date: 07-Apr-2022

**PLATE-18**

**COMPLETE H.T. COIL**

| Fig. No. | Part No. | Description | Qty | Remarks |
|---|---|---|---|---|
| 1 | 1A001794 | COMPLETE H.T.COIL | 1 | PTL |
| 2 | 642537 | PROTECTION CAP | 1 | PTL |
| 3 | 643149 | SPARK PLUG CAP | 1 | PTL |
| 4 | 1A001795 | SPARK PLUG PROTECTION COLLAR | 1 | PTL |
| 5 | B016552 | COIL SUPPORT BRACKET WITH I.P. | 1 | |
| 6 | B014063 | BUFFER DAMPER | 2 | |
| 7 | B014066 | SPACER | 2 | |
| 8 | 018639 | SCREW M6X20 | 2 | |
| 9 | 013880 | PLAIN WASHER | 2 | |
| 10 | 872816 | FLANGED NUT | 2 | |
| 11 | 1D001894 | GROUND WIRE | 1 | |
| 12 | 643367 | SPARK PLUG | 1 | |

**40**

Print Date: 07-Apr-2022

**PLATE-19**
**ENGINE MOUNTING**

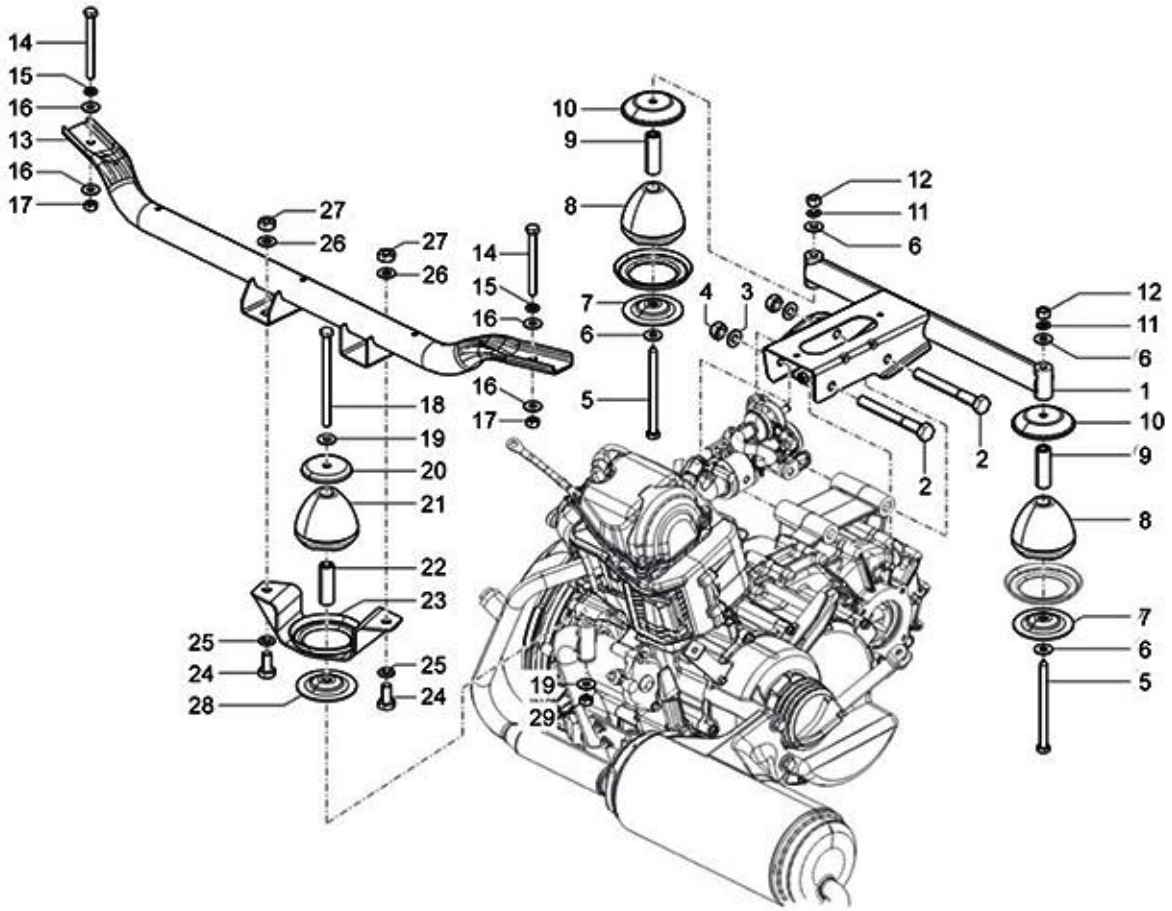
14
15
16
13
16
17
27
26
27
26
14
15
16
16
17
18
19
20
21
22
23
25
24
28
25
24
10
9
8
7
6
5
4
3
12
11
6
12
11
6
1
10
9
8
7
6
5
2
2
19
29

41

Print Date: 07-Apr-2022

**PLATE-19**
**ENGINE MOUNTING**

| Fig. No. | Part No. | Description | Qty | Remarks |
|---|---|---|---|---|
| 1 | B075459 | FRT CROSS MEMBER ASSY. ENG. MTG. | 1 | |
| 2 | 568689 | HEX HEAD BOLT M10X100 | 2 | |
| 3 | 286328 | PLAIN WASHER 20X10.2X2 | 2 | |
| 4 | 231370 | SELF BREAKING NUT M10 | 2 | |
| 5 | 604948 | HEX.HDD BOLT M8 X 110 WITH POINTING | 2 | |
| 6 | 2383 | PLAIN WASHER M20X8.5X2 | 4 | |
| 7 | 569244 | PLATE | 2 | |
| 8 | 265091 | DUMPER ENGINE MTG. | 2 | |
| 9 | 569241 | SPACER | 2 | |
| 10 | 569377 | PLATE | 2 | |
| 11 | 016408 | SPRING WASHER | 2 | |
| 12 | 15335 | HEX HD NUT M8 | 2 | |
| 13 | B075595 | CROSS MEMBER ENGINE MTG REAR | 1 | |
| 14 | B076205 | HEAD BOLT (M8 X 85) | 2 | |
| 15 | 016408 | SPRING WASHER | 2 | |
| 16 | 2383 | PLAIN WASHER M20X8.5X2 | 4 | |
| 17 | 20108 | HEX NUT M8 | 2 | |
| 18 | 272178 | HEX. HDD BOLT M8 X 122 CL 10.9 | 1 | |
| 19 | 2383 | PLAIN WASHER M20X8.5X2 | 2 | |
| 20 | 569375 | PLATE | 1 | |
| 21 | 265091 | DUMPER ENGINE MTG. | 1 | |
| 22 | 569241 | SPACER | 1 | |
| 23 | B003286 | REAR AVM SUPPORT BKT. ASSY. | 1 | |
| 24 | 31154 | HEX HDD SCREW M10X22 CL 8.8 | 2 | |
| 25 | 16410 | SPRING WASHER | 2 | |
| 26 | 286328 | PLAIN WASHER 20X10.2X2 | 2 | |
| 27 | 20110 | HEX NUT M10 | 2 | |
| 28 | 569244 | PLATE | 1 | |
| 29 | 20108 | HEX NUT M8 | 1 | |

42

Print Date: 07-Apr-2022

**PLATE-20**

**MAIN FRAME/BATTERY BKT/JACK BKT**

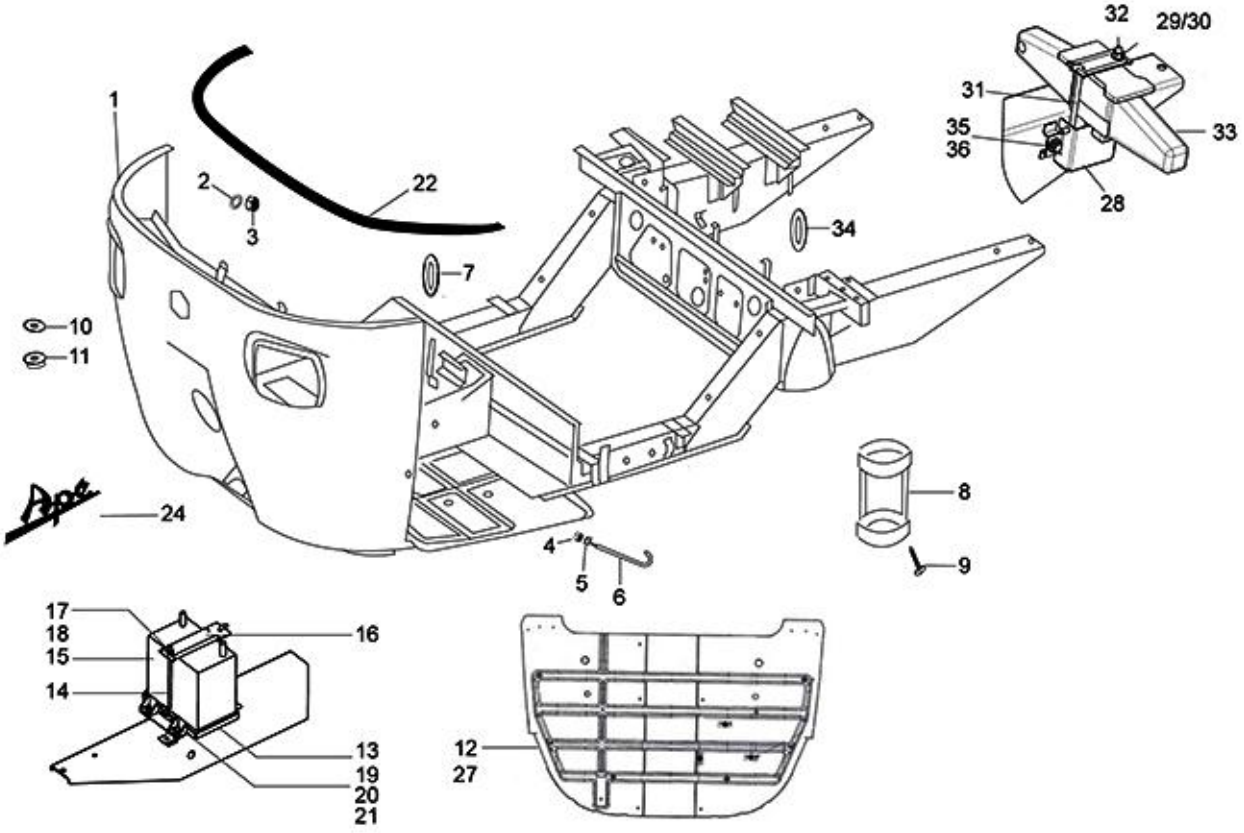
32
29/30
31
35
36
33
28
1
2
3
22
34
7
10
11
8
24
4
5
6
9
17
18
15
14
16
13
19
20
21
12
27

43

Print Date: 07-Apr-2022

**PLATE-20**

**MAIN FRAME/BATTERY BKT/JACK BKT**

| Fig. No. | Part No. | Description | Qty | Remarks |
|---|---|---|---|---|
| 1 | 6B001698BY | MAIN FRAME ASSLY WITH IP EXP-BY | 1 | coloued part |
| 1 | 6B001698EG | MAIN FRAME ASSLY WITH IP EXP-EG | 1 | coloued part |
| 1 | 6B001698WR | MAIN FRAME ASSLY WITH IP EXP-WR | 1 | coloued part |
| 1 | 6B001698BL | MAIN FRAME ASSLY WITH IP EXP-BL | 1 | coloued part |
| 1 | 6B001698BW | MAIN FRAME ASSLY WITH IP-BSIV EXP_BW | 1 | coloued part |
| 1 | 6B001698CB | MAIN FRAME ASSLY WITH IP-BSIV EXP_CB | 1 | coloued part |
| 1 | 6B001698GY | MAIN FRAME ASSLY WITH IP EXP-GY | 1 | coloued part |
| 1 | 6B001698NB | MAIN FRAME ASSLY WITH IP EXP-NB | 1 | coloued part |
| 1 | 6B001698PA | MAIN FRAME ASSLY WITH IP EXP-PA | 1 | coloued part |
| 1 | 6B001698PB | MAIN FRAME ASSLY WITH IP EXP-PB | 1 | coloued part |
| 1 | 6B001698CO | MAIN FRAME ASSLY WITH IP EXP-CO | 1 | coloued part |
| 2 | 3054 | PLAIN WASHER | 5 | |
| 3 | 20104 | HEX NUT M4 | 5 | |
| 4 | 20108 | HEX NUT M8 | 1 | |
| 5 | 3058 | PLAIN WASHER 15X8.4X1.5 | 1 | |
| 6 | 604954 | TENSION ROD | 1 | |
| 7 | B076606 | GROMMET | 1 | |
| 8 | B041392 | BOTTLE CARRIER STAND | 1 | |
| 9 | 660168 | PAN SELF TP. SCREW 10 SGX13AB | 2 | |
| 10 | B075979 | GROMMET | 2 | |
| 11 | 604756 | HOSE CLIP | 2 | |
| 12 | B074150 | CABIN FLOOR SUB-ASSY. (PET/ DLS) | 1 | |
| 13 | 616649 | BATTERY TRAY | 1 | |
| 14 | 632508 | TENSION ROD ASSY. (BATTERY MOUNTING.) | 1 | |
| 15 | B006544 | BATTERY 12V-35AH | 1 | |
| 16 | B003978 | BATTERY HOLDING PLATE | 1 | |
| 17 | 20108 | HEX NUT M8 | 1 | |
| 18 | 3058 | PLAIN WASHER 15X8.4X1.5 | 1 | |
| 19 | 016408 | SPRING WASHER | 1 | |
| 20 | 13861 | PLAIN WASHER 20X8.2X2.5 | 4 | |
| 21 | 31118 | SCREW M8X20 | 4 | |
| 22 | B024474 | BEADDING LINING | 1 | |
| 23 | NS | NOT SERVICEABLE | 1 | NI |
| 24 | B078919 | APE CITY STICKER (FRONT PANEL) | 1 | |
| 26 | B074637 | BEEDING DOME SIDE PILLAR (PET/DLS) | 1 | NI |

44

Print Date: 07-Apr-2022

**PLATE-20**

**MAIN FRAME/BATTERY BKT/JACK BKT**

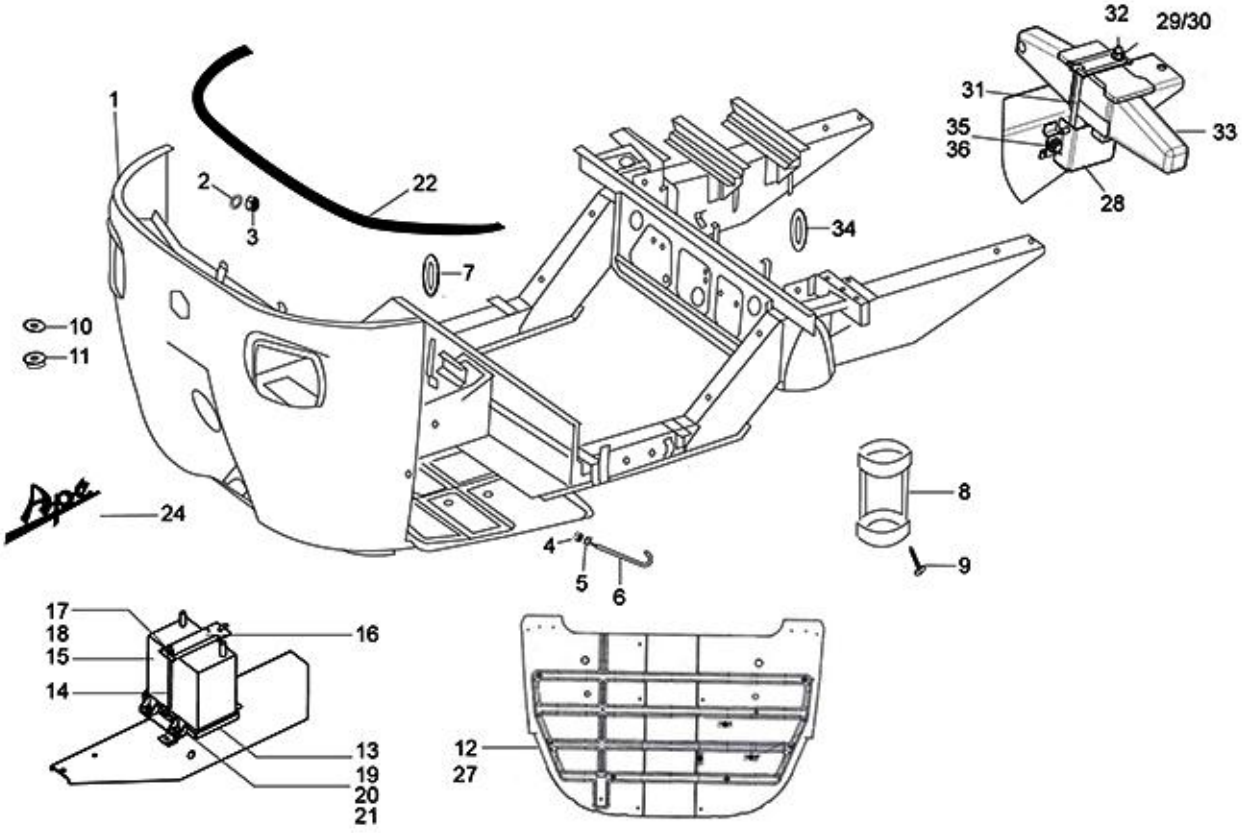
32
29/30
31
35
36
33
28
1
2
3
22
34
7
10
11
8
24
4
5
6
9
17
18
15
14
16
13
19
20
21
12
27

45

Print Date: 07-Apr-2022

**PLATE-20**

**MAIN FRAME/BATTERY BKT/JACK BKT**

| Fig. No. | Part No. | Description | Qty | Remarks |
|---|---|---|---|---|
| 28 | B076012 | JACK BOX | 1 | |
| 29 | 13861 | PLAIN WASHER 20X8.2X2.5 | 1 | |
| 30 | 20108 | HEX NUT M8 | 1 | |
| 31 | B075966 | RR TENSION ROD | 1 | |
| 32 | B075967 | FR TENSION ROD | 1 | |
| 33 | B076650R | JACK ASSLY | 1 | |
| 34 | B077480 | GROMMET RR PART OF CENTRAL BEAM ASSLY | 1 | |
| 35 | 652562 | HEX. SCREW M8 X 1.25 X 14 WITH SPRING WA | 2 | |
| 36 | 2383 | PLAIN WASHER M20X8.5X2 | 2 | |

46

Print Date: 07-Apr-2022

**PLATE-21**

**PASS. BODY WITH DOORS &HOOD FRAME & SOFT TOP**

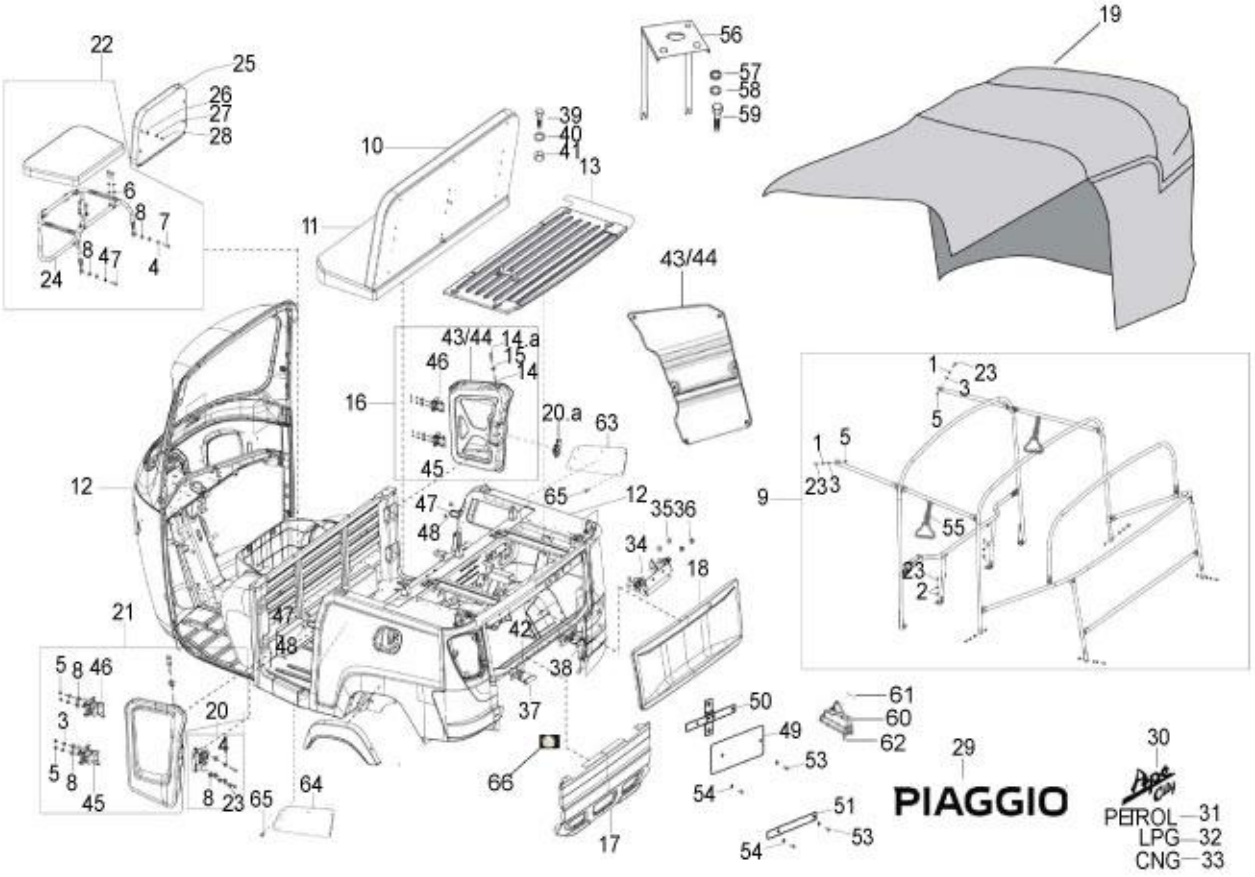
PIAGGIO
PETROL—31
LPG—32
CNG—33

47

Print Date: 07-Apr-2022

**PLATE-21**

**PASS. BODY WITH DOORS &HOOD FRAME & SOFT TOP**

| Fig. No. | Part No. | Description | Qty | Remarks |
|---|---|---|---|---|
| 1 | 3056 | PLAIN WASHER M6 OD12 | 2 | |
| 2 | 3058 | PLAIN WASHER 15X8.4X1.5 | 1 | |
| 3 | 16405 | SPRING WASHER M5 | 2 | |
| 4 | 016408 | SPRING WASHER | 2 | |
| 5 | 20106 | HEX NUT M6 | 4 | |
| 6 | 20108 | HEX NUT M8 | 2 | |
| 7 | 31122 | HEX HD. SCREW M8X30 CL 8.8 | 2 | |
| 8 | 2383 | PLAIN WASHER M20X8.5X2 | 4 | |
| 9 | B075744 | HOOD FRAME ASSLY PAX BS-IV | 1 | |
| 9 | KIT96048R | KIT HOOD FRAME ASSLY CITY DLX EXPORT AND UPPER STRIP | 1 | Applicable for P and C Export |
| 10 | 6B003045 | PASSENGER BACKREST | 1 | PTL |
| 11 | 6B003047 | PASSENGER SEAT BOTTOM ASSEMBLY | 1 | PTL |
| 12 | 6B002549BY | ASSLY PASSENGER BODY-BY | 1 | coloued part |
| 12 | 6B002549EG | ASSLY PASSENGER BODY-EG | 1 | coloued part |
| 12 | 6B002549WR | ASSLY PASSENGER BODY-WR | 1 | coloued part |
| 12 | 6B002549BL | ASSLY PASSENGER BODY-BL | 1 | coloued part |
| 12 | 6B002549BW | ASSLY PASSENGER BODY-BW | 1 | coloued part |
| 12 | 6B002549CB | ASSLY PASSENGER BODY-CB | 1 | coloued part |
| 12 | 6B002549GY | ASSLY PASSENGER BODY-GY | 1 | coloued part |
| 12 | 6B002549NB | ASSLY PASSENGER BODY-NB | 1 | coloued part |
| 12 | 6B002549PA | ASSLY PASSENGER BODY-PA | 1 | coloued part |
| 12 | 6B002549PB | ASSLY PASSENGER BODY-PB | 1 | coloued part |
| 12 | 6B002549CO | ASSLY PASSENGER BODY-CO | 1 | coloued part |
| 13 | B075724ED | ENGINE COMP DOOR ASSLY | 1 | |
| 14 | 6B001539 | POP-UP KNOB RH | 1 | |
| 14.a | 6B001518 | POP-UP KNOB LH | 1 | |
| 15 | 6B001519 | GROMMET(GUIDE FOR LATCH OPENING LINK) | 2 | |
| 16 | 6B001332ED | DOOR ASSLY-RH | 1 | |
| 17 | B077970ED | ASSLY VISUAL BARRIER BSIV | 1 | |
| 18 | B075531ED | TAIL GATE ASSY. | 1 | |
| 19 | 6B002450R | SOFT TOP ASSEMBLY - NON FR | 1 | P/N common For All Colours (assly no)-PTL |
| 19 | 6B002955 | SOFT TOP ASSEMBLY (BLACK-NON FR) | 1 | Soft top colour |
| 19 | 6B002956 | SOFT TOP ASSLY (YELLOW-BLACK INR-NFR) | 1 | Soft top colour |
| 19 | 6B002957 | SOFT TOP ASSLY (GREY-NON FR) | 1 | Soft top colour |
| 19 | 6B002958 | SOFT TOP ASSLY (GREEN-NON FR) | 1 | Soft top colour |

48

Print Date: 07-Apr-2022

**PLATE-21**

**PASS. BODY WITH DOORS &HOOD FRAME & SOFT TOP**

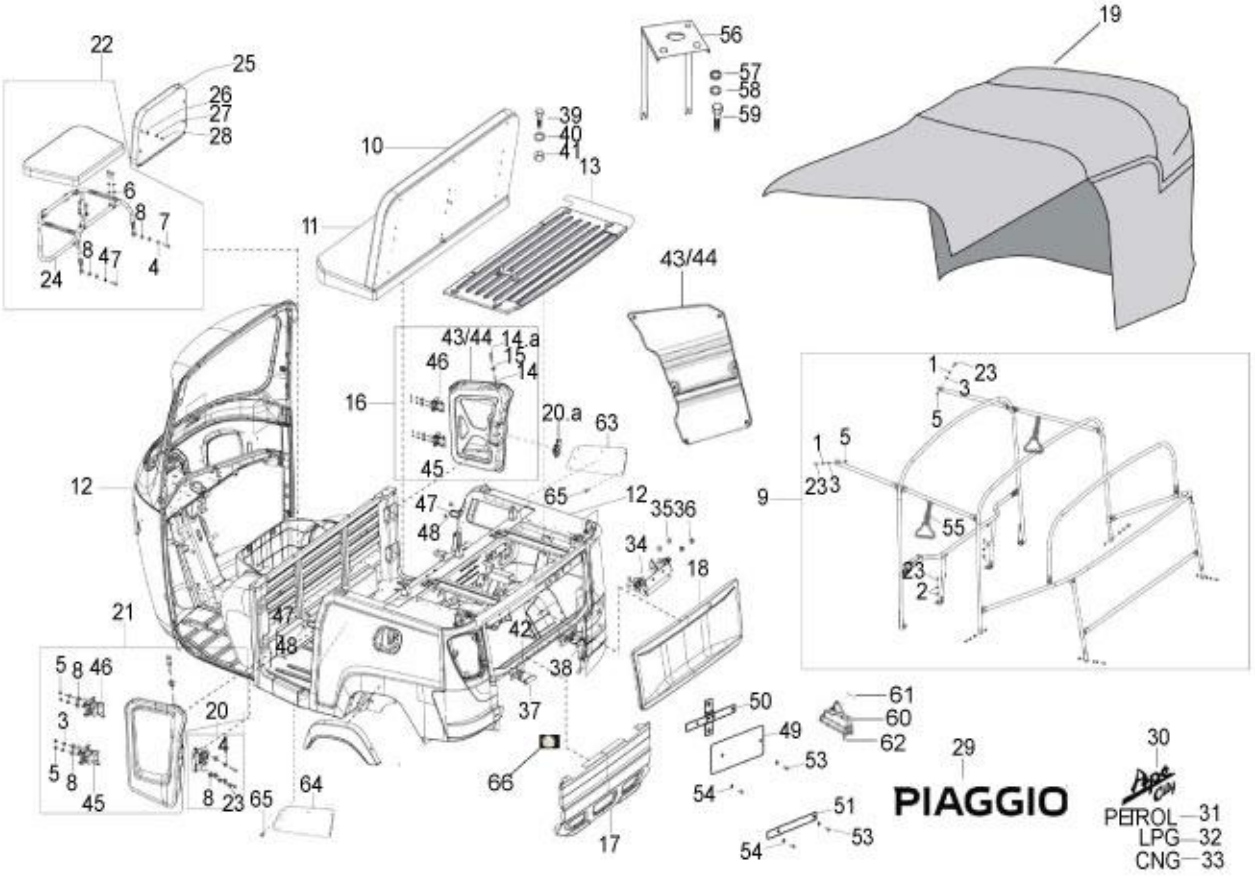
PIAGGIO
PETROL—31
LPG—32
CNG—33

49

Print Date: 07-Apr-2022

**PLATE-21**

**PASS. BODY WITH DOORS &HOOD FRAME & SOFT TOP**

| Fig. No. | Part No. | Description | Qty | Remarks |
|---|---|---|---|---|
| 19 | 6B002959 | SOFT TOP ASSLY (WHITE-NON FR) | 1 | Soft top colour |
| 19 | 6B002960 | SOFT TOP ASSLY (BROWN-NON FR) | 1 | Soft top colour |
| 20 | 6B000637 | LATCH ASSLY LH | 1 | |
| 20.a | 6B000638 | LATCH ASSLY RH | 1 | |
| 21 | 6B001331ED | DOOR ASSLY-LH | 1 | |
| 22 | 6B003040 | DRIVER SEAT ASSLY. | 1 | PTL |
| 23 | 31088 | HEX HD SCREW M6 X 16 CL 8.8 (811061623) | 22 | |
| 24 | 6B000808 | DRIVER SEAT PIPE S/A | 1 | Under Development |
| 25 | 6B003050 | DRIVER BACK REST ASSY | 1 | |
| 26 | 16405 | SPRING WASHER M5 | 4 | |
| 27 | 16603 | PLAIN WASHER (METALLIC) | 4 | |
| 28 | 20105 | PLAIN NUT M5 | 4 | |
| 29 | B078925 | PIAGGIO STICKER (VISUAL BARRIER | 1 | |
| 30 | B078924 | APE CITY STICKER (TAILGATE) | 1 | |
| 31 | B003652 | PLATE PETROL | 1 | |
| 34 | B076069 | LATCH-TAIL GATE | 1 | |
| 35 | 3056 | PLAIN WASHER M6 OD12 | 2 | |
| 36 | 2388 | WELD NUT M8 | 2 | Not Servicable |
| 37 | B076056ED | HINGE ASSLY LH, CROSS MEMBER | 1 | |
| 38 | B076057CED | HINGE ASSLY RH, CROSS MEMBER | 1 | |
| 39 | 31116 | HEX HD. SCREW M8X16 | 2 | |
| 40 | 3058 | PLAIN WASHER 15X8.4X1.5 | 2 | |
| 41 | 20108 | HEX NUT M8 | 2 | |
| 42 | B075505ED | C/S MEMBER S/A, BODY UPPER, REAR | 1 | |
| 43 | 6B001388 | PLASTIC PART INNER LH | 1 | |
| 44 | 6B001389 | PLASTIC PART INNER RH | 1 | |
| 45 | 6B001455 | HINGE ASSLY-PASS DOOR LOWER | 2 | |
| 46 | 6B001520 | DOOR HINGE ASSLY UPPER | 2 | |
| 47 | 6B001517 | STRIKER ASSLY | 2 | |
| 48 | 6B001654 | COUNTERSUNK SCREW M8 X 12 | 4 | |
| 49 | 6B001129 | REGISTRATION NUMBER PLATE(HSRP) | 2 | |
| 50 | 6B001137 | BRACKET ASSLY-REAR HSRP MTG | 2 | |
| 51 | 6B001140 | BRACKET ASSLY FRONT HSRP MTG | 1 | |
| 52 | 6D000374 | PIGTAIL ,LICENCE PLATE LAMP | 1 | NI |
| 53 | 30074 | HEX HEAD BOLT M8 X 40 CL 8.8 | 2 | |

**50**

Print Date: 07-Apr-2022

**PLATE-21**

**PASS. BODY WITH DOORS &HOOD FRAME & SOFT TOP**

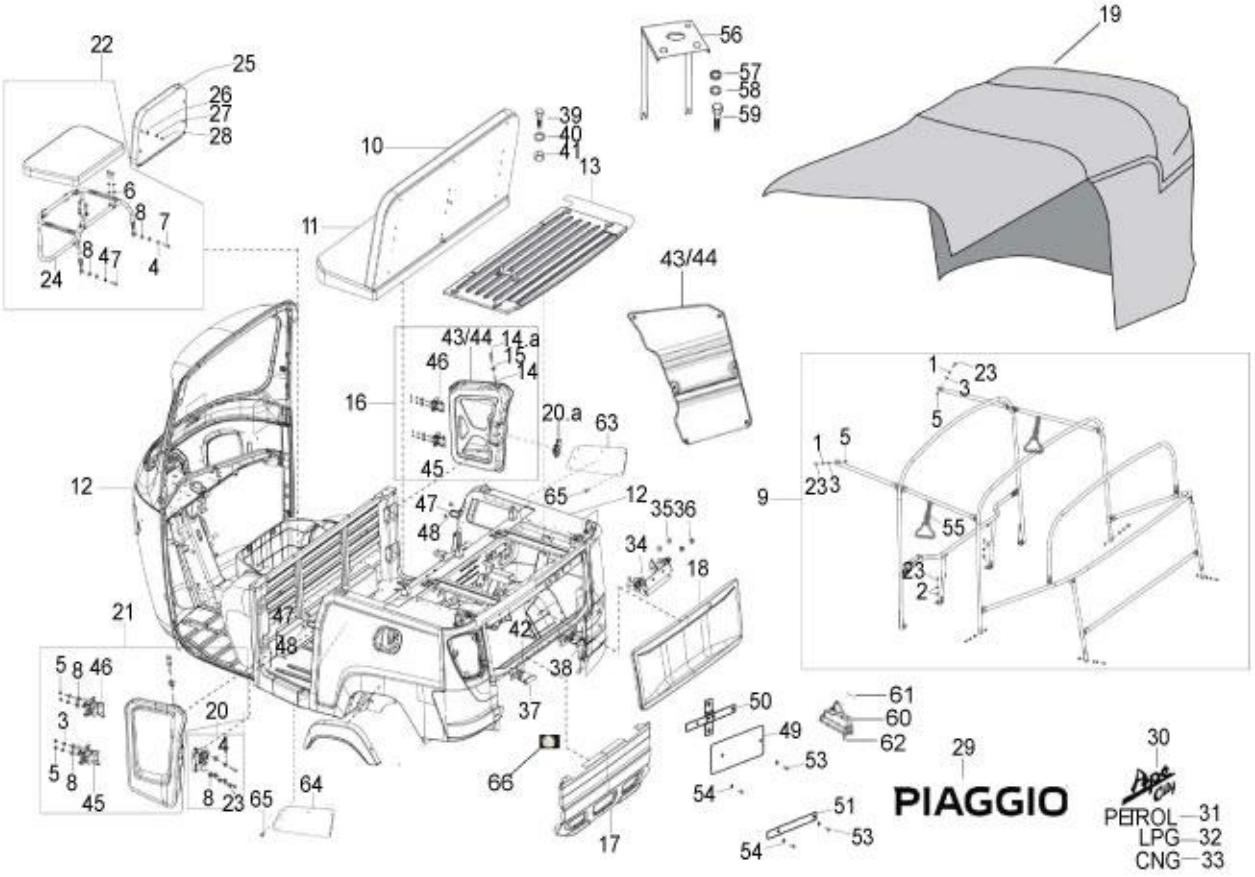
PIAGGIO
PETROL—31
LPG—32
CNG—33

51

Print Date: 07-Apr-2022

**PLATE-21**

**PASS. BODY WITH DOORS &HOOD FRAME & SOFT TOP**

| Fig. No. | Part No. | Description | Qty | Remarks |
|---|---|---|---|---|
| 54 | 3058 | PLAIN WASHER 15X8.4X1.5 | 2 | |
| 55 | 940090 | HANGING GRIP HANDLE(COMMON) | 2 | |
| 56 | B002334 | FARE METER MTG. BKT. | 1 | |
| 57 | 016408 | SPRING WASHER | 4 | |
| 58 | 3058 | PLAIN WASHER 15X8.4X1.5 | 4 | |
| 59 | 31118 | SCREW M8X20 | 4 | |
| 60 | 639088 | TAIL LAMP | 1 | |
| 61 | 3054 | PLAIN WASHER | 3 | |
| 62 | 157716 | SCREW ANCHORE | 3 | |
| 63 | B041118 | TRIM PAD SIDE PANEL | 1 | |
| 64 | B041217 | TRIM PAD SIDE PANEL LH | 1 | |
| 65 | 660168 | PAN SELF TP. SCREW 10 SGX13AB | 12 | |
| 66 | 6632187Z01 | CUSHION, RUBBER | 2 | |
| 67 | B076308 | RUBBER SPACER (LIGHT RAGISTRATION LAMP) | 2 | NI(SPACER BETWEEN HSRP PLATE AND BODY) |
| 68 | 6B001170 | SOFT TOP REINFORCEMENT PLASTIC | 2 | GREEN COLOUR |
| 69 | 6B002781 | GROMMET FOR TAIL GATE LOCK | 1 | NI |

52

Print Date: 07-Apr-2022

**PLATE-22**

**WINDSHIELD, GLASS ,PACKING & MIRROR**

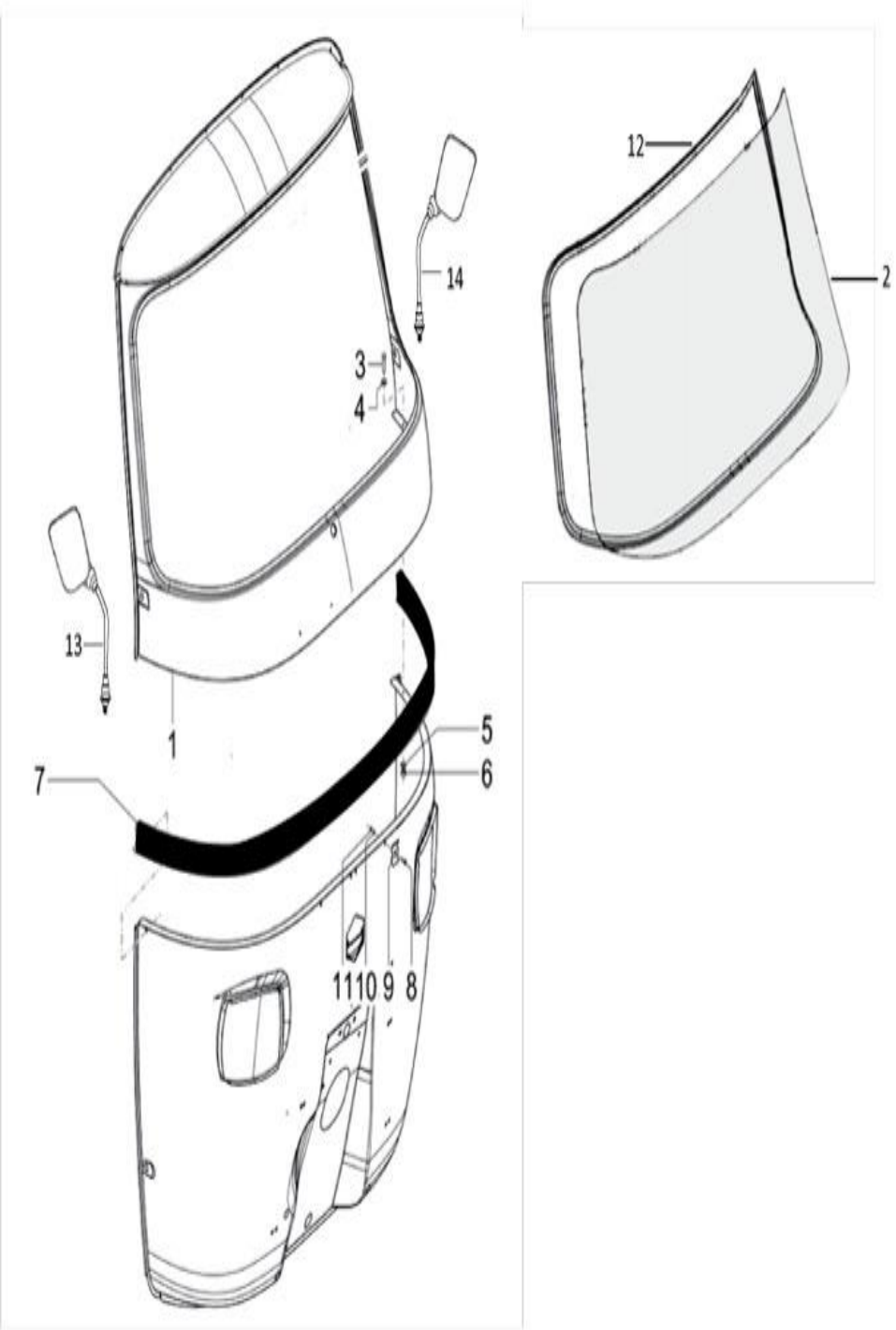
12
2
14
3
4
13
1
5
6
7
11
10
9
8

53

Print Date: 07-Apr-2022

**PLATE-22**

**WINDSHIELD, GLASS ,PACKING & MIRROR**

| Fig. No. | Part No. | Description | Qty | Remarks |
|---|---|---|---|---|
| 1 | B073602ED | WINDSCREEN FRAME (COMPLETE) | 1 | ED Coating |
| 1 | B073602BL | ASSLY WINDSHIELD COMPLTE PAX UPGR-BL SPD | 1 | coloued part |
| 1 | B073602BW | ASSLY WINDSHIELD COMPLTE PAX UPGR-BW SPD | 1 | coloued part |
| 1 | B073602CB | ASSLY WINDSHIELD COMPLTE PAX UPGR-CB SPD | 1 | coloued part |
| 1 | B073602EG | ASSLY WINDSHIELD COMPLTE PAX UPGR-EG SPD | 1 | coloued part |
| 1 | B073602GY | WINDSHIELD FRAME (GOLDEN YELLOW) | 1 | coloued part |
| 1 | B073602NB | ASSLY WINDSHIELD COMPLTE PAX UPGR-NB SPD | 1 | coloued part |
| 1 | B073602WR | ASSLY WINDSHIELD COMPLTE PAX UPGR-WR SPD | 1 | coloued part |
| 2 | B073601 | LAMINATED WINSHIELD GLASS | 1 | |
| 3 | 30242 | SLOT CH. HD. SCREW | 10 | |
| 4 | 16405 | SPRING WASHER M5 | 10 | |
| 5 | 12546 | PLAIN WASHER / MULTI TOOTH LOCK WASHER M5 | 10 | |
| 6 | 20105 | PLAIN NUT M5 | 10 | |
| 7 | B024474 | BEADDING LINING | 1 | |
| 8 | 15911 | PAN SELF TAP SCREW 8SG X 16 AB | 5 | |
| 9 | 190462 | PLATE ASSY. | 5 | |
| 10 | 3054 | PLAIN WASHER | 5 | |
| 11 | 20104 | HEX NUT M4 | 5 | |
| 12 | B073626 | WINDSHIELD PACKING | 1 | |
| 13 | B073666 | REAR VIEW MIRROR RH | 1 | |
| 14 | B073665 | REAR VIEW MIRROR LH | 1 | |

**54**

Print Date: 07-Apr-2022

**PLATE-23**
**MUDGUARD**

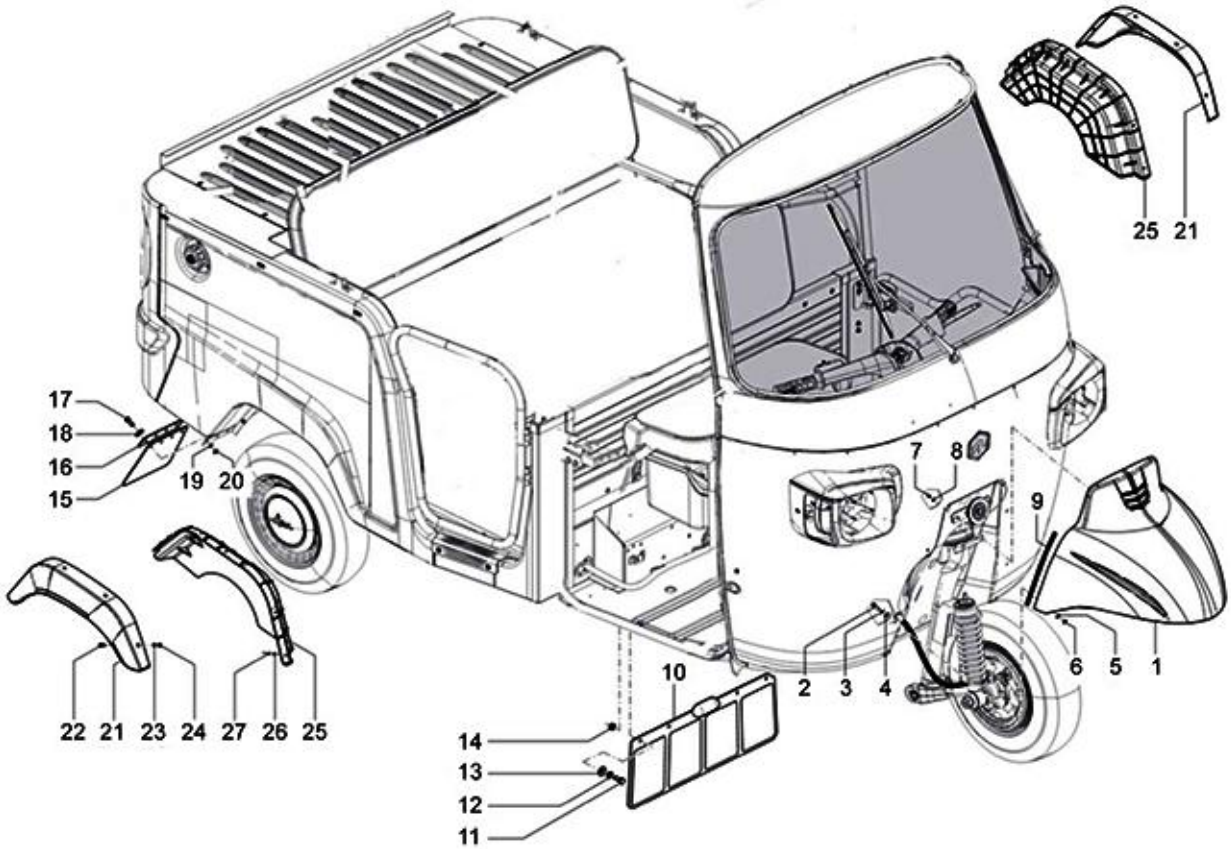
25 21
17
18
16
15
19 20
7 8
9
22 21 23 24 27 26 25
10
2 3 4
6 5 1
14
13
12
11

55

Print Date: 07-Apr-2022

**PLATE-23**
**MUDGUARD**

| Fig. No. | Part No. | Description | Qty | Remarks |
|---|---|---|---|---|
| 1 | B073882BW | FRONT MUDGUARD - PAINTED-BW | 1 | |
| 1 | B073882BY | FRONT MUDGUARD_UPGRD_PAINTED_BY | 1 | |
| 1 | B073882CB | FRONT MUDGUARD - PAINTED -CB | 1 | |
| 1 | B073882EG | FRONT MUDGUARD - PAINTED - EG | 1 | |
| 1 | B073882GY | FRONT MUDGUARD - PAINTED - GY | 1 | |
| 1 | B073882NB | FRONT MUDGUARD - PAINTED - NB | 1 | |
| 2 | 31089 | HEX HEAD SCREW M6X18 CL 8.8 | 4 | |
| 3 | 016406 | SPRING WASHER | 4 | |
| 4 | 3056 | PLAIN WASHER M6 OD12 | 4 | |
| 5 | 013880 | PLAIN WASHER | 4 | |
| 6 | 20106 | HEX NUT M6 | 4 | |
| 7 | 15900 | HEAD LAMP SECURING SCREW/PAN SELF TAP SCREW | 2 | |
| 8 | 3055 | PLAIN WASHER M5 | 2 | |
| 9 | B074063 | GASKET FOR FRONT MUDGUARD | 1 | |
| 10 | B041054 | MUD FLAP FRONT | 1 | |
| 11 | 31088 | HEX HD SCREW M6 X 16 CL 8.8 (811061623) | 4 | |
| 12 | 016406 | SPRING WASHER | 4 | |
| 13 | 013880 | PLAIN WASHER | 4 | |
| 14 | 20106 | HEX NUT M6 | 4 | |
| 15 | B001789 | MUDFLAP MUDGAURD REAR | 1 | |
| 16 | B001788 | CLAMP MUDFLAP REAR | 1 | |
| 17 | 31057 | HEX HEAD SCREW M5 X 14 CL 8.8 | 8 | |
| 18 | 013880 | PLAIN WASHER | 8 | |
| 19 | 16405 | SPRING WASHER M5 | 8 | |
| 20 | 20105 | PLAIN NUT M5 | 8 | |
| 21 | B073853 | RR MUDGUARD RH | 1 | |
| 21 | B073852 | MUDGUARD REAR LH | 1 | |
| 22 | 15900 | HEAD LAMP SECURING SCREW/PAN SELF TAP SCREW | 8 | |
| 23 | 16603 | PLAIN WASHER (METALLIC) | 8 | |
| 24 | 20105 | PLAIN NUT M5 | 8 | |
| 25 | B041397 | COVER INNER MUDGAURD RH | 1 | |
| 25 | B041398 | COVER INNER MUDGAURD LH | 1 | |
| 26 | 16603 | PLAIN WASHER (METALLIC) | 10 | |
| 27 | 604603 | RIVET | 10 | |

**56**

Print Date: 07-Apr-2022

**PLATE-24**

**FUEL TANK/FILTER/FUEL PIPES - PETROL**

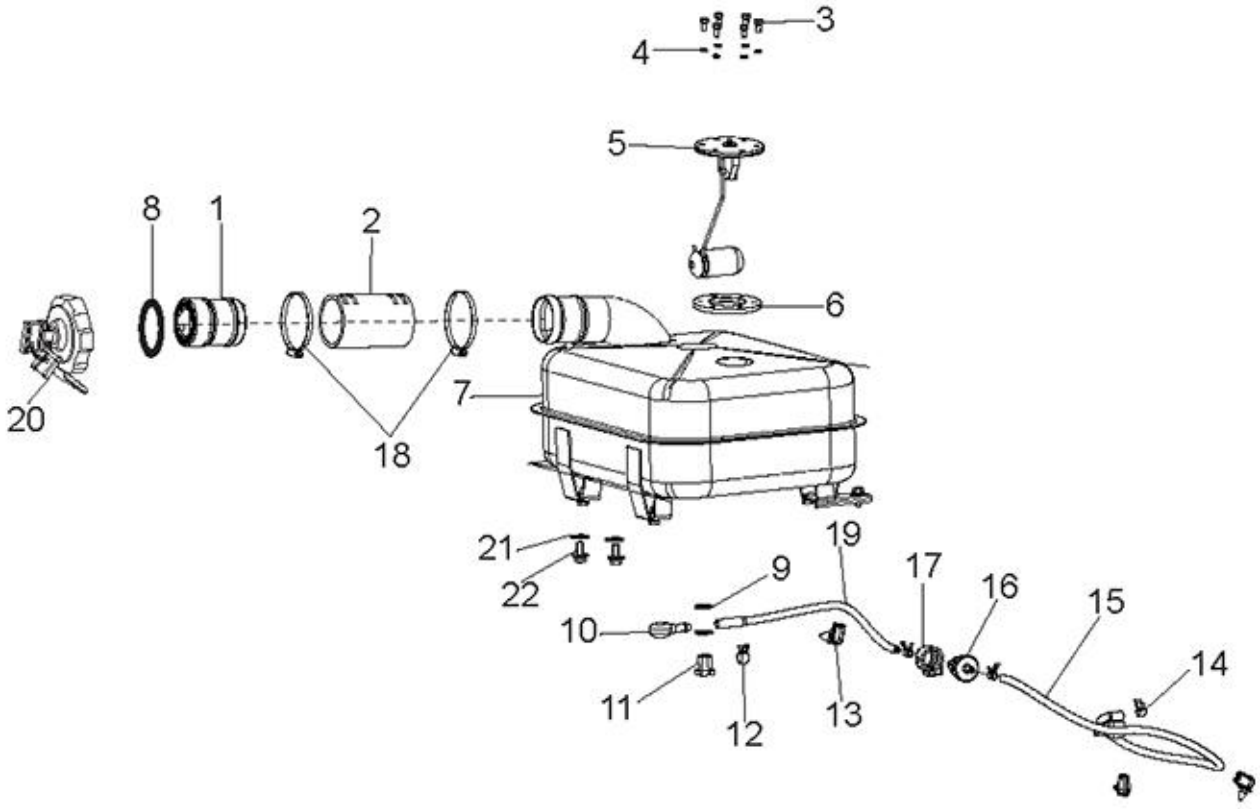
3
4
5
8
1
2
6
20
7
18
21
22
19
9
17
16
15
10
14
11
12
13

57

Print Date: 07-Apr-2022

**PLATE-24**

**FUEL TANK/FILTER/FUEL PIPES - PETROL**

| Fig. No. | Part No. | Description | Qty | Remarks |
|---|---|---|---|---|
| 1 | B003115 | TUBE FUEL TANK FILLER ASSY | 1 | |
| 2 | B003114 | HOSE FUEL TANK | 1 | |
| 3 | 31056 | HEX HEAD SCREW M5 X 12 CL. 8.8 | 5 | |
| 4 | 16405 | SPRING WASHER M5 | 5 | |
| 5 | 567878R | TANK UNIT | 1 | |
| 6 | 925888 | RUBBER GASKET FOR TANK UNIT | 1 | |
| 7 | B076903 | FUEL TANK ASSLY WITH T.UNIT CITY DSL/PTL | 1 | |
| 8 | 644299 | COLLAR | 1 | |
| 9 | 13880 | METALIC PLAIN WASHER | 2 | |
| 10 | 604908 | BANJO | 1 | |
| 11 | 604909 | BANJO BOLT (M14X1.5) | 1 | |
| 12 | B003282 | HOSE CLIP (DIA.7) (PETROL & CNG/LPG) | 2 | |
| 13 | 216369 | CLAMP | 3 | |
| 14 | B003282 | HOSE CLIP (DIA.7) (PETROL & CNG/LPG) | 3 | |
| 15 | B076406 | FUEL PIPE - FUEL FILTER TO CARBURATOR-PTL | 1 | |
| 16 | B074593 | COMPACT FUEL STRAINER (3 L/H) | 1 | |
| 17 | B075790 | FUEL FILTER SUPPORT | 1 | |
| 18 | B041853 | HOSE CLIP (SIZE : 65A) | 2 | |
| 19 | B075336 | FUEL PIPE -TANK TO FILTER-PTL | 1 | |
| 20 | B024168 | P.T.CAP ASSLY WITH KEY | 1 | |
| 21 | 16405 | SPRING WASHER M5 | 6 | |
| 22 | 31056 | HEX HEAD SCREW M5 X 12 CL. 8.8 | 6 | |

58

Print Date: 07-Apr-2022

**PLATE-25**

**CAB COMPONENTS_CARPETS & TOOL KIT**

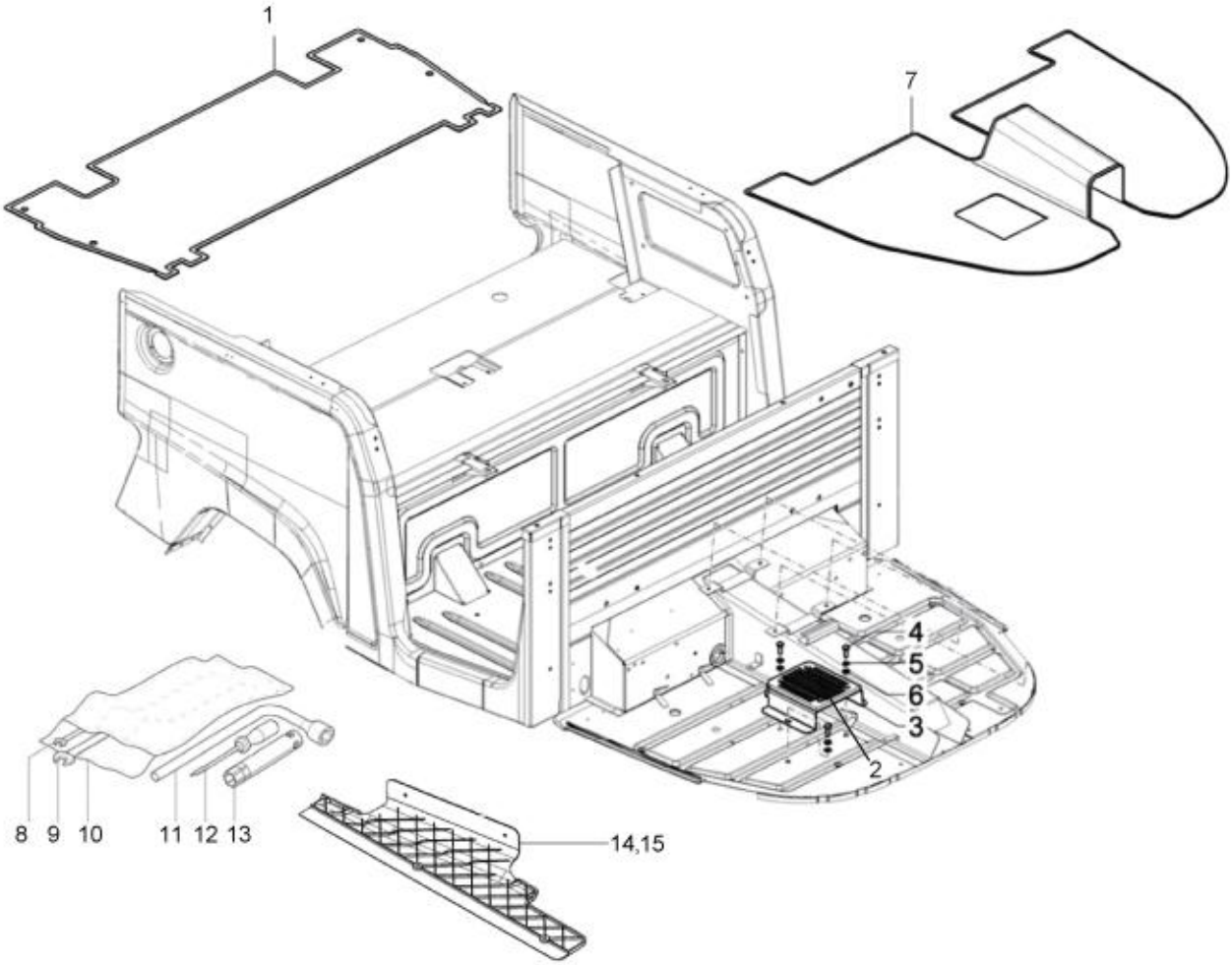
1
7
4
5
6
3
2
8
9
10
11
12
13
14,15

59

Print Date: 07-Apr-2022

**PLATE-25**

**CAB COMPONENTS_CARPETS & TOOL KIT**

| Fig. No. | Part No. | Description | Qty | Remarks |
|---|---|---|---|---|
| 1 | 6B001994 | CARPET PASSENGER FOOT REST | 1 | |
| 2 | B074024 | RUBBER MAT FOR FOOT REST | 4 | |
| 3 | B075267 | FOOTREST ASSLY. COMPLETE | 1 | |
| 4 | 31119 | HEX HD SCREW M8 X 25 | 3 | |
| 5 | 016408 | SPRING WASHER | 3 | |
| 6 | 3058 | PLAIN WASHER 15X8.4X1.5 | 3 | |
| 7 | B074060 | FRONT CARPET (PETROL) | 1 | PTL |
| 8 | 567454 | DOUBLE END SPANNER7/8 | 1 | |
| 9 | 567456 | DOUBLE END SPANNER 12/14 | 1 | |
| 10 | B041876 | TOOL BAG | 1 | |
| 11 | B076142 | L TYPE SPANNER - A/F 16 | 1 | |
| 12 | 567458 | SCREW DRIVER (-)&(+) 80 | 1 | |
| 13 | B041787 | SPARK PLUG SPANNER | 1 | |
| 14 | B075984 | FOOT STEP COVER RH | 1 | |
| 15 | B075985 | FOOT STEP COVER LH | 1 | |

**60**

Print Date: 07-Apr-2022

**PLATE-26**

**DASHBOARD ASSLY COMPLETE & LOCK SET**

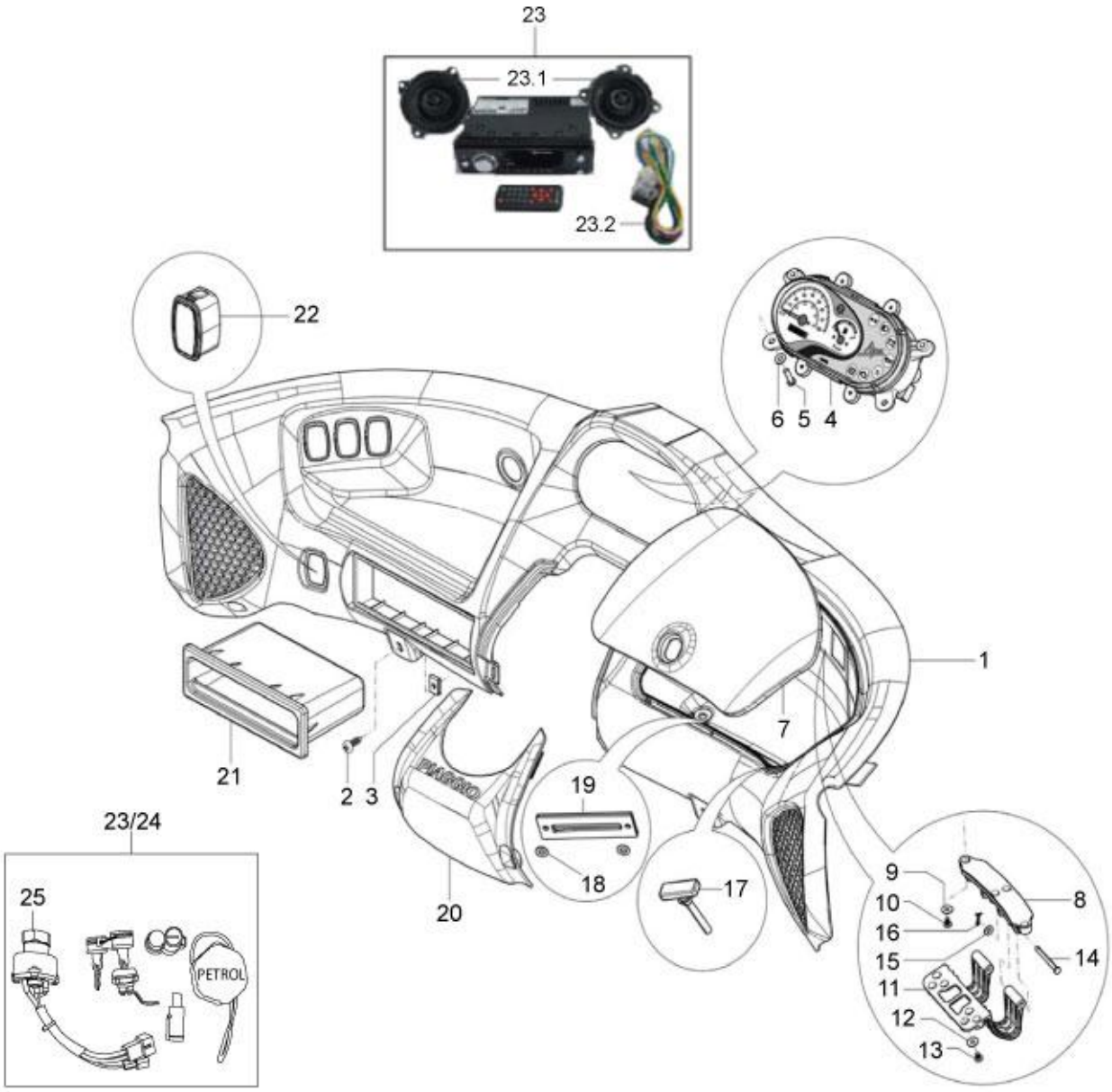
23
23.1
23.2
22
6 5 4
1
7
21
2 3
19
18
17
20
23/24
25
PETROL
9
10
16
15
11
12
13
8
14

61

Print Date: 07-Apr-2022

**PLATE-26**

**DASHBOARD ASSLY COMPLETE & LOCK SET**

| Fig. No. | Part No. | Description | Qty | Remarks |
|---|---|---|---|---|
| 1 | 6B003032 | DASHBOARD ASSLY.COMPLETE | 1 | PTL |
| 1 | 6B003024 | DASH BOARD ASSY. | 1 | |
| 2 | 660168 | PAN SELF TP. SCREW 10 SGX13AB | 7 | |
| 3 | 8080 | SPRING PLATE | 7 | |
| 4 | B078033 | INST.CLUST- CITY - (PETROL) SW/NEUTRAL | 1 | PTL |
| 5 | 661925 | PHILIP PAN HEAD SCREW (M5 X 0.8 X 1.6) | 4 | |
| 6 | 6078 | PLAIN WASHER 12 X 5.2 X 1 | 4 | |
| 7 | B073810 | GLOVE BOX COVER | 1 | |
| 8 | B073813 | HINGE MTG. BKT. | 1 | |
| 9 | 16670 | PLAIN WASHER 12X4.5X1 | 4 | |
| 10 | NS | NOT SERVICEABLE | 4 | |
| 11 | B073814 | HINGE | 1 | |
| 12 | 16670 | PLAIN WASHER 12X4.5X1 | 6 | |
| 13 | B074261 | PHIL RD HD SCREW M4 | 6 | Under Development |
| 14 | B074262 | PIN | 2 | |
| 15 | 3055 | PLAIN WASHER M5 | 2 | |
| 16 | 567920 | SPLIT PIN | 2 | |
| 17 | B074275 | RUBBER DAMPER | 2 | |
| 18 | 3054 | PLAIN WASHER | 2 | |
| 19 | 643691 | BOLT LOCK PLATE | 1 | |
| 20 | 6B003028 | STEERING COLUMN COVER | 1 | |
| 21 | B073812 | UTILITY BOX | 1 | |
| 22 | B075732 | FUEL CHANGE OVER SWITCH | 1 | Not Applicable |
| 23 | KIT6D000952 | KIT ELECTRONIC AUDIO SYSTEM AND PIGTAIL | 1 | |
| 23.1 | 6D000952 | ELECTRONIC AUDIO SYSTEM | 1 | |
| 23.2 | 6D000948 | PIGTAIL, MUSIC SYSTEM | 1 | |
| 24 | B076407 | LOCK SET WITH KEYS ( CITY BSIV PTL DLX) | 1 | |
| 25 | B024532 | KEY IGNITION SWITCH W/COUPLER (PAVNA) | 1 | |
| 26 | B042170 | CAP - SIDE PANEL | 1 | Mono Fuel (LPG) |

**62**

Print Date: 07-Apr-2022

**PLATE-27**

**HEAD LAMP & BEZEL ASSY, LOGO & SUPPORT**

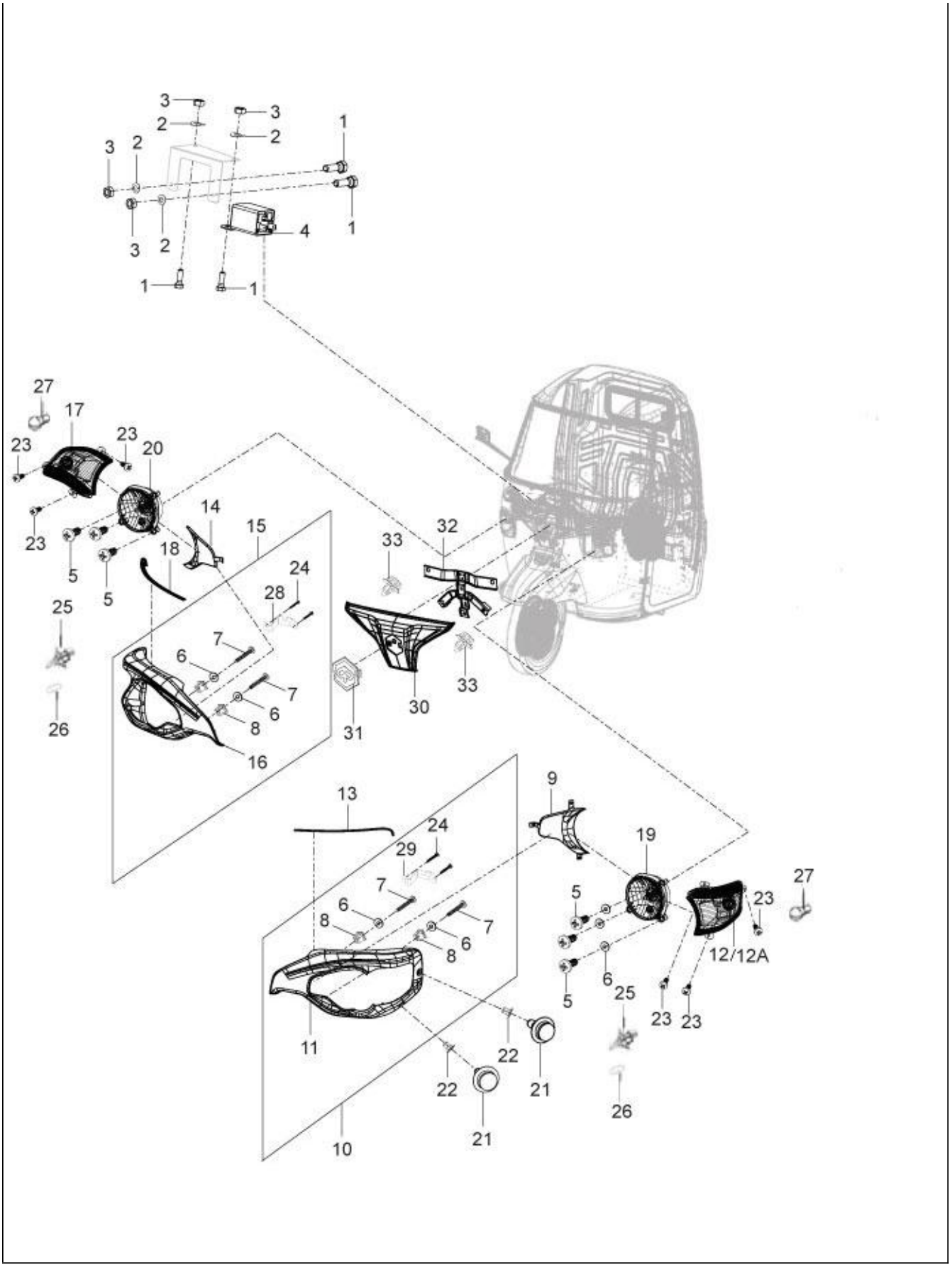
3
2
3
2
1
3
2
1
3
2
4
1
1
1
27
17
23
23
20
14
15
23
18
5
5
24
28
25
7
6
7
6
8
26
16
33
32
33
30
31
13
9
24
29
19
7
6
8
7
6
8
5
23
27
12/12A
6
5
25
23
23
11
22
22
21
21
26
10

63

Print Date: 07-Apr-2022

**PLATE-27**

**HEAD LAMP & BEZEL ASSY, LOGO & SUPPORT**

| Fig. No. | Part No. | Description | Qty | Remarks |
|---|---|---|---|---|
| 1 | 31058 | HEX HEAD SCREW M5 X 16 CC8.8 | 4 | |
| 2 | 6965 | SPRING WASHER DIA 5 | 4 | |
| 3 | 20105 | PLAIN NUT M5 | 4 | |
| 4 | 6D000305 | FLASHER RELAY (BG LI-IN) | 1 | |
| 5 | 15900 | HEAD LAMP SECURING SCREW/PAN SELF TAP SCREW | 6 | |
| 6 | 16670 | PLAIN WASHER 12X4.5X1 | 10 | |
| 7 | 18630 | PAN SELF TAP SCREW 6SG X 25AB | 4 | |
| 8 | 157716 | SCREW ANCHORE | 4 | |
| 9 | 6B003007 | SIDE PROFILE LH | 1 | Painted |
| 10 | 6B003144 | HEADLAMP BEZEL ASSEMBLY LH | 1 | |
| 11 | 6B003146 | HEADLAMP BEZEL LH | 1 | |
| 12 | 6D000145R | FRONT DIRECTION INDICATORS LH | 1 | |
| 12A | B078274 | BLINKER HOUSING (LH)-(HOUSING + GLASS) | 1 | |
| 13 | 6B002757 | HEADLAMP BEZEL BEADING | 2 | |
| 14 | 6B003008 | SIDE PROFILR RH | 1 | Painted |
| 15 | 6B003148 | HEAD LAMP BEZEL ASSLY. RH | 1 | |
| 16 | 6B003150 | HEAD LAMP BEZEL RH | 1 | |
| 17 | 6D000146R | FRONT DIRECTION INDICATORS RH | 1 | |
| 17A | B078272 | BLINKER HOUSING (RH)-(HOUSING + GLASS) | 1 | |
| 18 | 6B002757 | HEADLAMP BEZEL BEADING | 1 | |
| 19 | 6D000143R | HEAD LAMP ASSLY LH - NUOVO | 1 | |
| 20 | 6D000144R | HEAD LAMP ASSLY - RH (NUOVO) | 1 | |
| 21 | B076605 | PIN | 4 | |
| 22 | B076606 | GROMMET | 4 | |
| 23 | 661925 | PHILIP PAN HEAD SCREW (M5 X 0.8 X 1.6) | 6 | |
| 24 | D9004159230 | SCREW, W / WASHER | 6 | |
| 25 | B078286R | HS1_BULB ( 12 V _35/35W | 2 | |
| 26 | 567593 | BULB 12V 5W / LAMP 4W | 2 | |
| 27 | 925581 | INDICATOR LIGHT BULB 12V 21W AMBER COLOUR | 2 | |
| 28 | 6B002792 | HEAD LAMP BEZEL MTG BRACKET | 1 | |
| 29 | 6B002796 | HEAD LAMP BEZEL MTG BRACKET | 1 | |
| 30 | 6B003006 | LOGO SUPPORT- SILVER | 1 | Painted |
| 31 | B076120 | HEXAGONAL EMBLEM | 1 | |
| 32 | 6B002586 | LOGO SUPPORT BRACKET | 1 | |
| 33 | 6B002827 | LOGO SUPPORT MTG. CLIP | 2 | |

**64**

Print Date: 07-Apr-2022

**PLATE-28**
**HANDLEBARS**

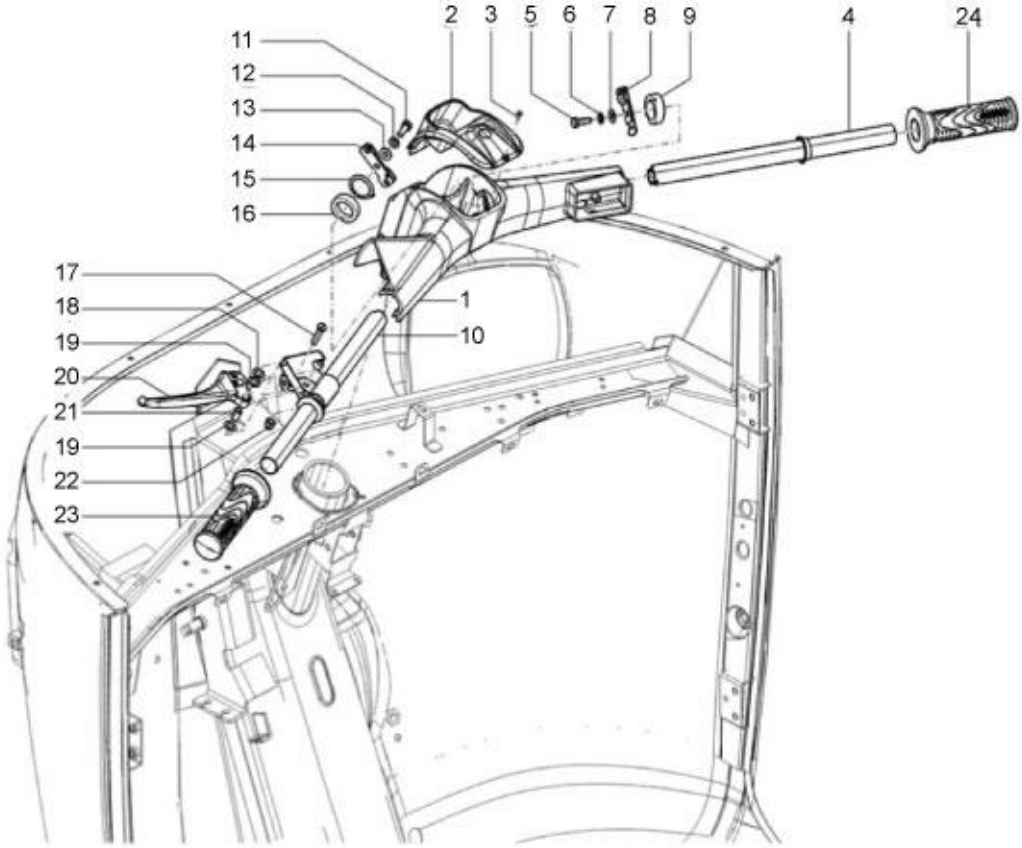
2
3
5
6
7
8
9
4
24
11
12
13
14
15
16
17
18
19
20
21
19
22
23
1
10

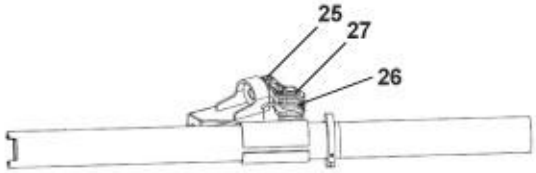
25
27
26

65

Print Date: 07-Apr-2022

**PLATE-28**
**HANDLEBARS**

| Fig. No. | Part No. | Description | Qty | Remarks |
|---|---|---|---|---|
| 1 | B075687ED | HANDLE BAR BODY-ED | 1 | |
| 2 | 6B003027 | COVER | 1 | |
| 3 | 632158 | CSK HEAD SCREW | 1 | |
| 4 | 587902 | ACCELERATOR TUBE ASSY. | 1 | |
| 5 | 31089 | HEX HEAD SCREW M6X18 CL 8.8 | 1 | |
| 6 | 016406 | SPRING WASHER | 1 | |
| 7 | 16626 | PLAIN WASHER (18X10.5X2) | 1 | |
| 8 | 109635 | THROTTLE CONTROL LEVER WITH IP | 1 | |
| 9 | 587904 | SINTERED WASHER HANDLE BAR (41769) | 1 | |
| 10 | 109775 | GEAR CONTROL LEVER S/A | 1 | |
| 11 | 31089 | HEX HEAD SCREW M6X18 CL 8.8 | 1 | |
| 12 | 016406 | SPRING WASHER | 1 | |
| 13 | 16626 | PLAIN WASHER (18X10.5X2) | 1 | |
| 14 | 109775 | GEAR CONTROL LEVER S/A | 1 | |
| 15 | 60565 | SPRING WASHER | 1 | |
| 16 | 109404 | WASHER OF RABBET(41737) | 1 | |
| 17 | 632158 | CSK HEAD SCREW | 1 | |
| 18 | 16319 | BENT SPRING WASHER | 1 | |
| 19 | 16620 | PLAIN WASHER | 2 | |
| 20 | 1E002770 | LEVER CLUTCH CONTROL | 1 | |
| 21 | 125181 | SPACER | 1 | |
| 22 | 12138 | NYLOCK NUT M6 | 1 | |
| 23 | B073848 | HANDLE BAR GRIP - LH | 1 | |
| 24 | B073849 | HANDLE BAR GRIP - RH | 1 | |
| 25 | 1E002771 | LEVER, CLUTCH SWITCH | 1 | |
| 26 | 1E002772 | SPRING TORSION | 1 | |
| 27 | 6A000209 | CIRCLIP FOR SHAFT ID 9.3 | 1 | Under Development |

66

Print Date: 07-Apr-2022

**PLATE-29**

**FORK/STEERING TUBE - STEERING BEARING UNIT**

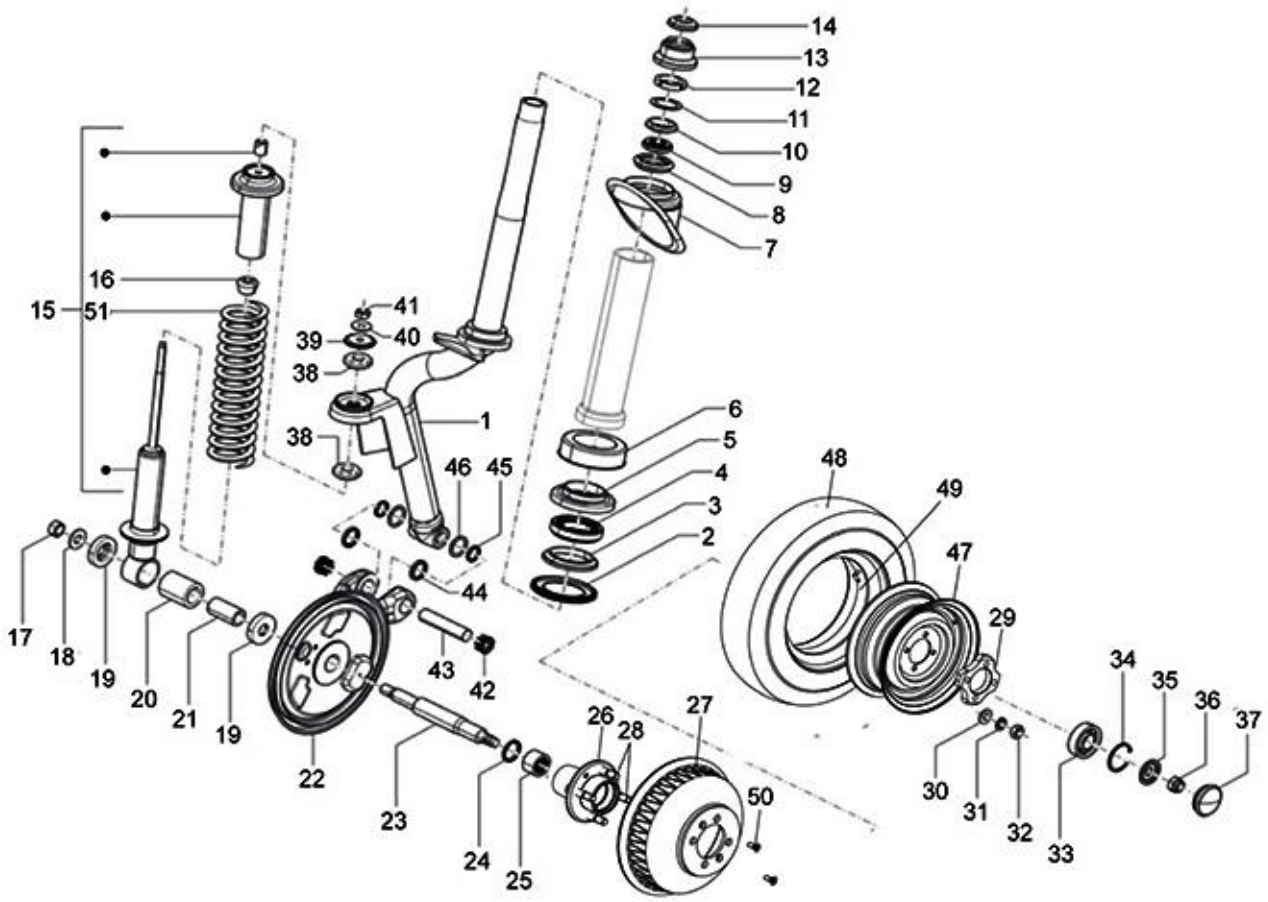
14
13
12
11
10
9
8
7
16
15
51
41
39
40
38
1
38
6
5
4
3
2
46
45
48
49
47
29
44
17
18
19
20
21
19
43
42
22
23
24
25
26
28
27
50
30
31
32
33
34
35
36
37

67

Print Date: 07-Apr-2022

**PLATE-29**

**FORK/STEERING TUBE - STEERING BEARING UNIT**

| Fig. No. | Part No. | Description | Qty | Remarks |
|---|---|---|---|---|
| 1 | B078679SP | STRG. COLUMN ASSY COMPL-PAX UPGR SPD | 1 | ASSY.INC. SUS., BACK PLATE ASSY &BRK DRUM&SUS. |
| 1 | B073667SP | STEERING COLUMN ASSLY (NRB)-PAX UPGR SPD | 1 | ASSY.INC. SUS., BACK PLATE ASSY |
| 1 | B075694 | STEERING COLUMN WITH IP | 1 | |
| 2 | 109066 | WASHER WITH PROTECTION FOR BEARING | 1 | |
| 3 | 567993 | BEARING RACE LOWER BOTTOM | 1 | |
| 4 | 6C000191 | LOWER BALL CAGE (VE) | 1 | |
| 5 | 567992 | BEARING RACE LOWER TOP | 1 | |
| 6 | 109064 | DUST COVER | 1 | |
| 7 | 109265 | SPLASH GUARD DUST COVER | 1 | |
| 8 | 567990 | BEARING RACE UPPER BOTTOM | 1 | |
| 9 | 6C000190 | UPPER BALL CAGE (VE) | 1 | |
| 10 | 567991 | BEARING RACE UPPER TOP | 1 | |
| 11 | 108873 | STOP WASHER FOR HOLDING | 1 | |
| 12 | 108874 | SECURING RING NUT | 1 | |
| 13 | 604758 | PROTECTION | 1 | |
| 14 | 604759 | RUBBER CAP STEERING COLUMN (N.I.) | 1 | |
| 15 | B073690 | FRONT SHOCK ABSORBER | 1 | |
| 16 | 75708 | SILENT BLOCK | 1 | |
| 17 | 568095 | NYLOCK NUT | 1 | |
| 18 | 87067 | PLAIN WASHER 30.5X14.3X2 | 1 | |
| 19 | 87067 | PLAIN WASHER 30.5X14.3X2 | 2 | |
| 20 | 566545 | RUBBER BUSH (FRT SHOCK ABSORBER) - MODIFIED | 1 | |
| 21 | 109117 | RUBBER BUSH (FRT SHOCK ABSORBER) / RING | 1 | |
| 22 | B024113 | FRONT BRAKE ASSY. | 1 | |
| 23 | 643772R | FRONT WHEEL AXLE | 1 | |
| 24 | 196302 | OIL SEAL | 1 | |
| 25 | 125289 | NEEDLE BEARING, CRANKASE, FRONT WHEEL | 1 | |
| 26 | B077465 | FRONT HUB S/A | 1 | |
| 27 | B077245 | BRAKE DRUM (CAST IRON) | 1 | |
| 28 | B001301 | BOLT FRONT HUB. | 4 | |
| 29 | B077461 | SPACER DISC FRONT WHEEL MTG (ALUMIN.) | 1 | |
| 30 | B008915 | PLAIN WASHER 16.6X10.2X1 | 4 | |
| 31 | 16410 | SPRING WASHER | 4 | |
| 32 | 20110 | HEX NUT M10 | 4 | |
| 33 | 30209R | BALL BEARING FRONT WHEEL HUB | 1 | |

68

Print Date: 07-Apr-2022

**PLATE-29**

**FORK/STEERING TUBE - STEERING BEARING UNIT**

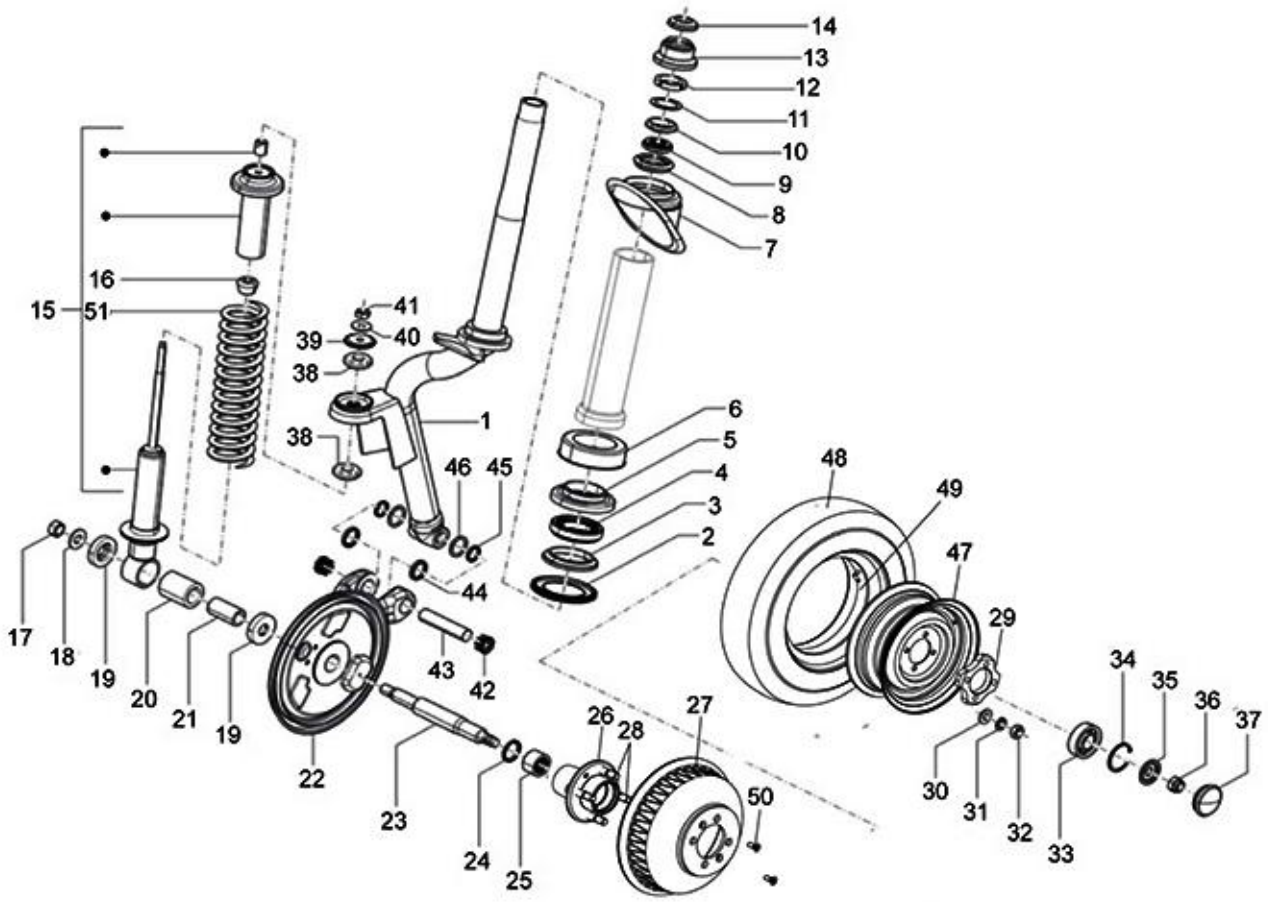
14
13
12
11
10
9
8
7
16
15
51
41
39
40
38
1
38
6
5
4
3
2
46
45
48
49
47
29
44
17
18
19
20
21
19
43
42
22
23
24
25
26
28
27
50
30
31
32
33
34
35
36
37

69

Print Date: 07-Apr-2022

**PLATE-29**

**FORK/STEERING TUBE - STEERING BEARING UNIT**

| Fig. No. | Part No. | Description | Qty | Remarks |
|---|---|---|---|---|
| 34 | 567473 | CIRCLIP DIA. 42 INT. (841004203) | 1 | |
| 35 | 180431 | COIN WASHER | 1 | |
| 36 | 74521 | NUT M14 X 1.5 | 1 | |
| 37 | 107871 | CAP | 1 | |
| 38 | 74414 | RUBBER BUSH/BUFFER FOR COUPLING SHOCK ABSORBE | 2 | |
| 39 | 6066 | PL WASHER 10.5X38X9 | 1 | |
| 40 | 16410 | SPRING WASHER | 1 | |
| 41 | 20110 | HEX NUT M10 | 1 | |
| 42 | 107718 | ROLLER BUSH | 2 | |
| 43 | 137235 | STEERING PIN | 1 | |
| 44 | 150579 | RING FOR HOLDING TYPE J F101 17A | 2 | |
| 45 | 8771 | OIL SEAL (18-24-4) | 2 | |
| 46 | 6733 | O RING | 2 | |
| 47 | 6C000430 | WHEEL RIM ASSY | 1 | |
| 48 | B001315 | TYRE (4.0 X 8,4 PR) | 3 | |
| 49 | B001316 | INNER TUBE FOR TYRE 4.0 X 8 INCH | 3 | |
| 50 | 812061656 | CSK PHILIPS HEAD SCREW M6 X 16 | 2 | |
| 51 | 940066 | SPRING SHOCK ABSORBER-UG / RING | 1 | |

**70**

Print Date: 07-Apr-2022

**PLATE-30**

**REAR SUSPENSION - SHOCK ABSORBER/S & ENGINE SUPPORT**

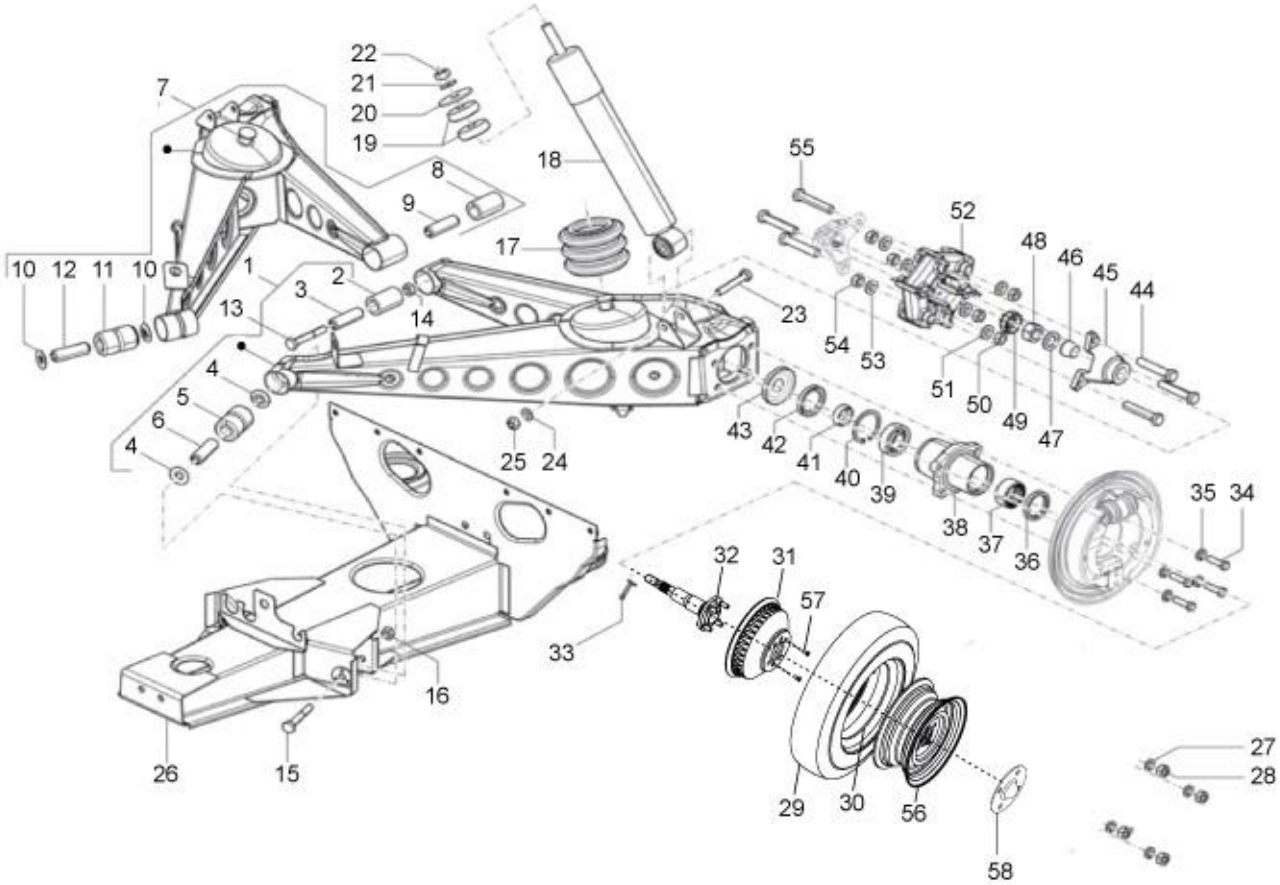
22
21
20
19
7
18
55
8
9
52
17
48
46
45
44
10
12
11
10
1
2
3
13
14
23
54
53
51
50
49
47
4
5
6
4
25
24
43
42
41
40
39
38
37
36
35
34
32
31
57
33
16
26
15
27
28
29
30
56
58

71

Print Date: 07-Apr-2022

**PLATE-30**

**REAR SUSPENSION - SHOCK ABSORBER/S & ENGINE SUPPORT**

| Fig. No. | Part No. | Description | Qty | Remarks |
|---|---|---|---|---|
| 1 | B075807 | ARM SUB ASSY. LH - REAR SUSPENSION | 1 | |
| 2 | 226662 | RING FOR ELASTIC SUPPORT | 1 | |
| 3 | 226661 | INTERNAL BUSH | 1 | |
| 4 | 661266 | SHOULDER WASHER | 2 | |
| 5 | 226596 | BUSH FRONT RING FOR ELASTIC SUPPORT | 1 | |
| 6 | 267065 | SPACER FRONT | 1 | |
| 7 | B075808 | ARM SUB ASSY. RH - REAR SUSPENSION | 1 | |
| 8 | 226662 | RING FOR ELASTIC SUPPORT | 1 | |
| 9 | 226661 | INTERNAL BUSH | 1 | |
| 10 | 661266 | SHOULDER WASHER | 2 | |
| 11 | 226596 | BUSH FRONT RING FOR ELASTIC SUPPORT | 1 | |
| 12 | 267065 | SPACER FRONT | 1 | |
| 13 | 643741 | HEX HDD BOLT M10 X 80 CL 12.9 | 2 | |
| 14 | 231370 | SELF BREAKING NUT M10 | 2 | |
| 15 | 643741 | HEX HDD BOLT M10 X 80 CL 12.9 | 2 | |
| 16 | 231370 | SELF BREAKING NUT M10 | 2 | |
| 17 | B076290 | RUBBER BUMPER | 2 | |
| 18 | B076292 | SHOCK ABSORBER REAR - BSIV | 2 | |
| 19 | 157103 | BUSH - SHOCK ABSORBER | 2 | |
| 20 | 6066 | PL WASHER 10.5X38X9 | 2 | |
| 21 | 16410 | SPRING WASHER | 2 | |
| 22 | 20110 | HEX NUT M10 | 2 | |
| 23 | 267068 | HEX HEAD BOLT M10 X 60 CC 10.9 | 2 | |
| 24 | 286328 | PLAIN WASHER 20X10.2X2 | 2 | |
| 25 | 231370 | SELF BREAKING NUT M10 | 2 | |
| 26 | B075798 | FRAME ASSY. SUSPENSION & ENGINE SUPPORT | 1 | |
| 27 | 16410 | SPRING WASHER | 4 | |
| 28 | 20110 | HEX NUT M10 | 4 | |
| 29 | B001315 | TYRE (4.0 X 8,4 PR) | 3 | |
| 30 | B001316 | INNER TUBE FOR TYRE 4.0 X 8 INCH | 3 | |
| 31 | B077245 | BRAKE DRUM (CAST IRON) | 2 | |
| 32 | B077458 | REAR AXLE COMPLETE | 2 | |
| 33 | 12790 | SPLIT PIN | 2 | |
| 34 | 6C000231 | M8X1.25X35 HEX COMBI SCREW-12.9 | 8 | |
| 35 | 016408 | SPRING WASHER | 8 | |

72

Print Date: 07-Apr-2022

**PLATE-30**

**REAR SUSPENSION - SHOCK ABSORBER/S & ENGINE SUPPORT**

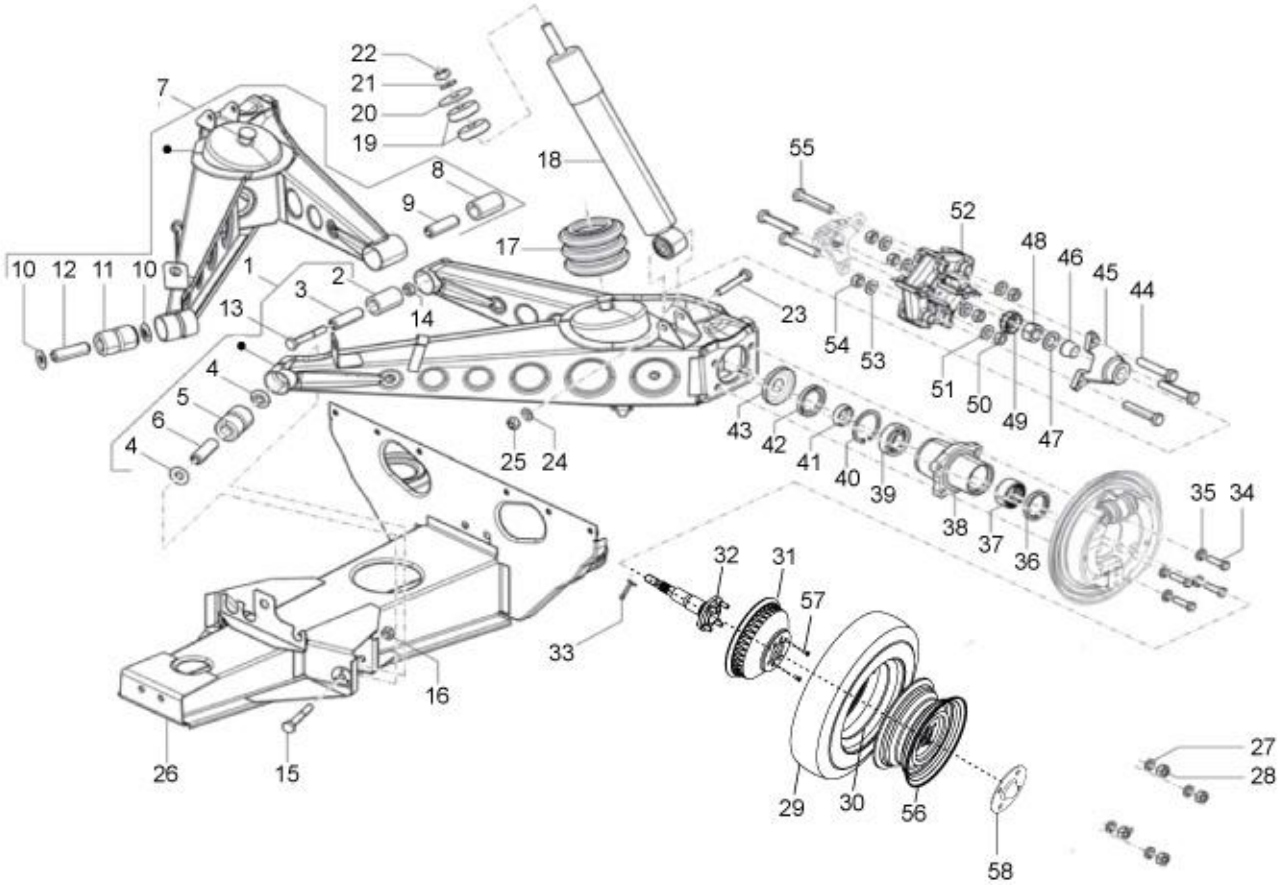
22
21
20
19
7
18
55
8
9
52
17
48
46
45
44
10
12
11
10
1
2
3
13
14
23
54
53
51
50
49
47
4
5
6
4
25
24
43
42
41
40
39
38
37
36
35
34
32
31
57
33
16
26
15
27
28
29
30
56
58

73

Print Date: 07-Apr-2022

**PLATE-30**

**REAR SUSPENSION - SHOCK ABSORBER/S & ENGINE SUPPORT**

| Fig. No. | Part No. | Description | Qty | Remarks |
|---|---|---|---|---|
| 36 | 20359 | SEAL RING | 2 | |
| 37 | 661282 | NEEDLE ROLLER BEARING | 2 | |
| 38 | 6C000530 | REAR WHEEL HUB | 2 | |
| 39 | 243303R | DEEP GROVE BALL BRG-RR WH AXLE | 2 | |
| 40 | 6650 | CIRCLIP DIA 50 (INT) | 2 | |
| 41 | 661267 | RING | 2 | |
| 42 | 196302 | OIL SEAL | 2 | |
| 43 | 109892 | PROTECTION CUP RR HUB | 2 | |
| 44 | 15594 | HEX HDD BOLT M10 X 35 | 6 | |
| 44.1 | B024373 | ALLEN BOLT M10X65 CL 10.9 | 6 | |
| 45 | 587617 | ELASTIC JOINT CONNECTION HUB (WHL - SIDE) | 2 | |
| 46 | 128633 | CONE | 2 | |
| 47 | 3068 | PLAIN WASHER | 2 | |
| 48 | 21118 | HEX NUT M18 X 1.5P | 2 | |
| 49 | 177559 | CAP | 2 | |
| 50 | 231370 | SELF BREAKING NUT M10 | 3 | |
| 51 | 237246 | SHIM WASHER 20X10.2X1 | 3 | |
| 52 | 604535 | FLEXIBLE COUPLING | 2 | |
| 53 | 237246 | SHIM WASHER 20X10.2X1 | 3 | |
| 54 | 231370 | SELF BREAKING NUT M10 | 3 | |
| 55 | B024373 | ALLEN BOLT M10X65 CL 10.9 | 3 | |
| 56 | 6C000430 | WHEEL RIM ASSY | 2 | |
| 57 | 812061656 | CSK PHILIPS HEAD SCREW M6 X 16 | 2 | |
| 58 | B077481 | WHEEL CAP | 1 | |

74

Print Date: 07-Apr-2022

**PLATE-31**
**DRIVE SHAFT & BELLOW**

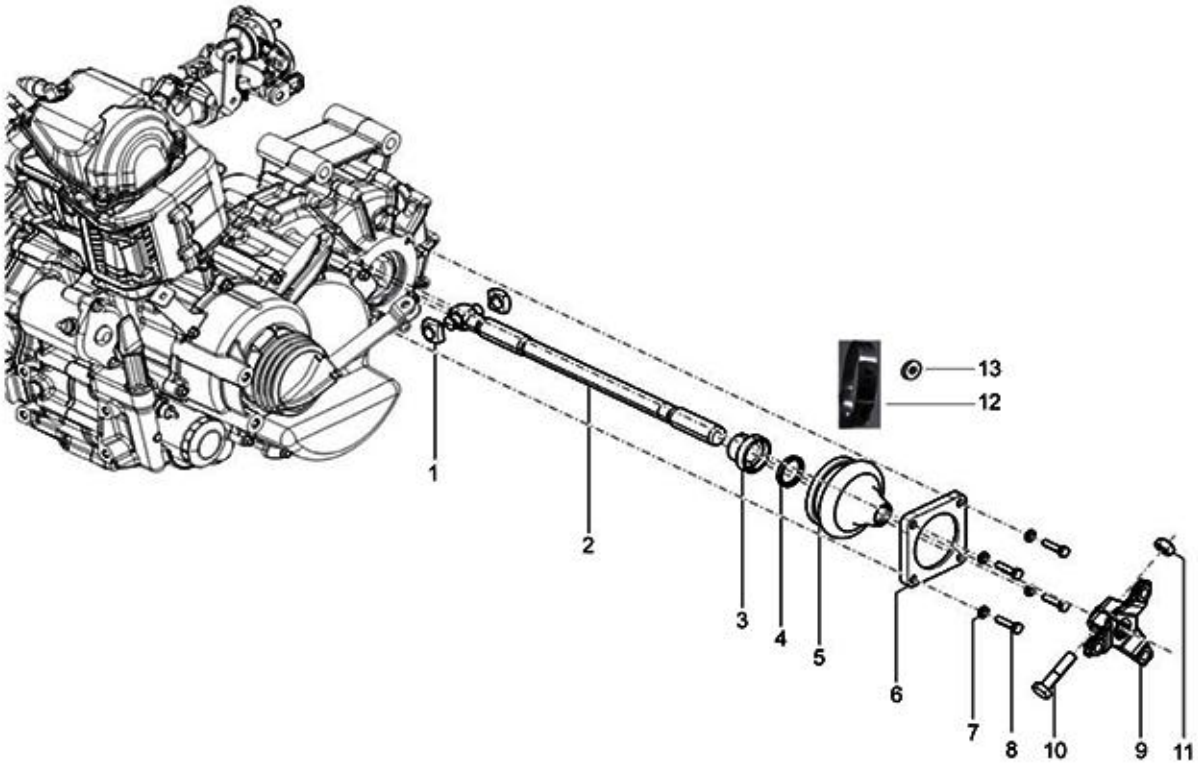
13
12
1
2
3
4
5
6
7
8
10
9
11

75

Print Date: 07-Apr-2022

**PLATE-31**
**DRIVE SHAFT & BELLOW**

| Fig. No. | Part No. | Description | Qty | Remarks |
|---|---|---|---|---|
| 1 | 112867R | SLIDER BLOCK PROP. SHAFT | 4 | |
| 2 | B023940 | PROP. SHAFT S/A | 2 | |
| 3 | 113278 | BRACKET RETAINER RING (41736) | 2 | |
| 4 | 6C000312R | SEAL RING | 2 | |
| 5 | 6C000016 | BELLOW | 2 | |
| 6 | 111356 | COVER | 2 | |
| 7 | 016406 | SPRING WASHER | 8 | |
| 8 | 31092 | HEX. HD SCREW M6X25 | 8 | |
| 9 | 111498 | ELASTIC HUB | 2 | |
| 10 | B024614 | HEX HEAD BOLT M10X45 CL 10.9 | 2 | |
| 11 | 231370 | SELF BREAKING NUT M10 | 2 | |
| 12 | 6C000041 | OTIKAR CLAMP FOR BELLOW | 2 | |
| 13 | 3056 | PLAIN WASHER M6 OD12 | 2 | |

76

Print Date: 07-Apr-2022

**PLATE-32**

**Front Brake Assembly**

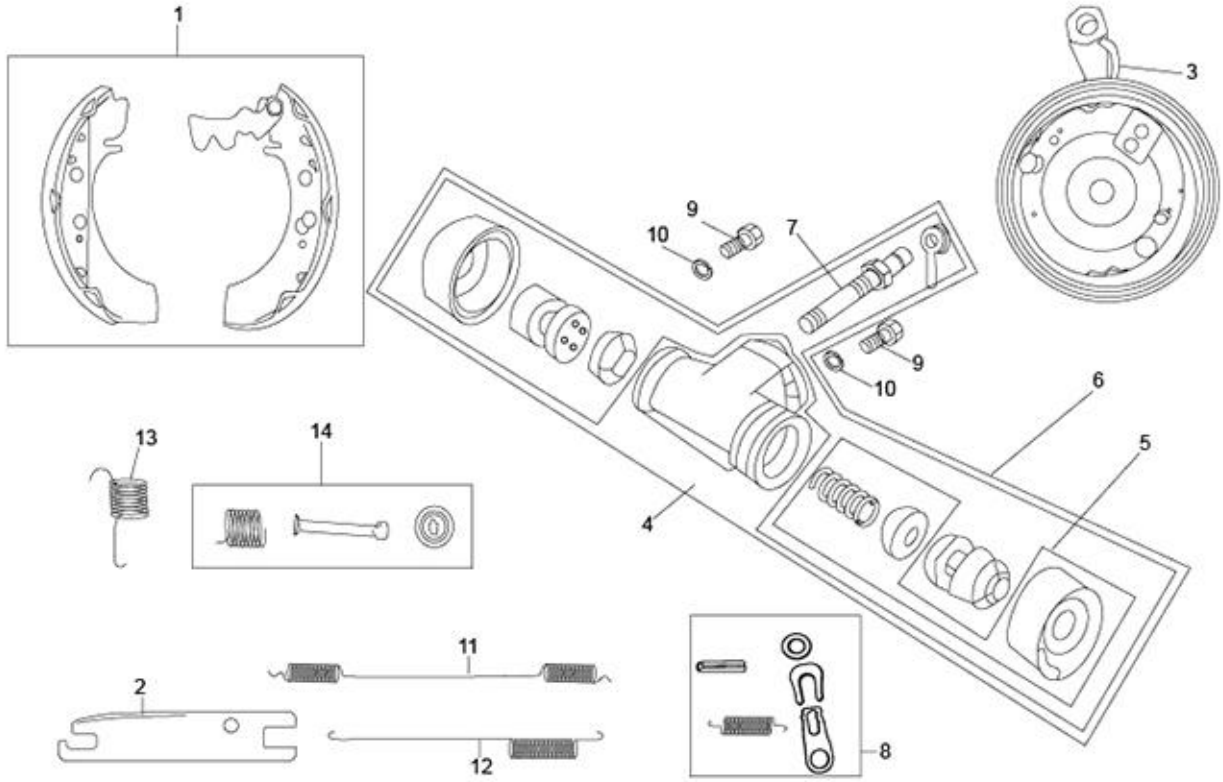
1
3
9
10
7
9
10
6
5
13
14
4
11
2
12
8

77

Print Date: 07-Apr-2022

**PLATE-32**

**Front Brake Assembly**

| Fig. No. | Part No. | Description | Qty | Remarks |
|---|---|---|---|---|
| 1 | KIT95033 | FRONT BRAKE LINERS KIT | 1 | |
| 2 | B003008 | STRUT FRONT | 1 | |
| 3 | B024113 | FRONT BRAKE ASSY. | 1 | |
| 4 | B003017 | WHEEL CYLINDER ASSY. | 1 | |
| 5 | B003325 | MINOR KIT WHEEL CYLINDER | 1 | |
| 6 | B003324 | MAJOR KIT WHEEL CYLINDER | 1 | |
| 7 | B003300 | BLEEDER SCREW | 1 | |
| 8 | B006509 | CLIP & PIN KIT | 1 | |
| 9 | 63440 | BOLT M6X12 | 2 | |
| 10 | 12536 | SPRING WASHER | 2 | |
| 11 | B003004 | SHOE RETURN SPRING (UPPER) | 1 | |
| 12 | B003003 | SHOE RETURN SPRING (LOWER) | 1 | |
| 13 | B003002 | STRUT SPRING | 1 | |
| 14 | KIT95036 | SHOE HOLD DOWN KIT | 1 | |

78

Print Date: 07-Apr-2022

**PLATE-33**

**Rear Brake Assembly**

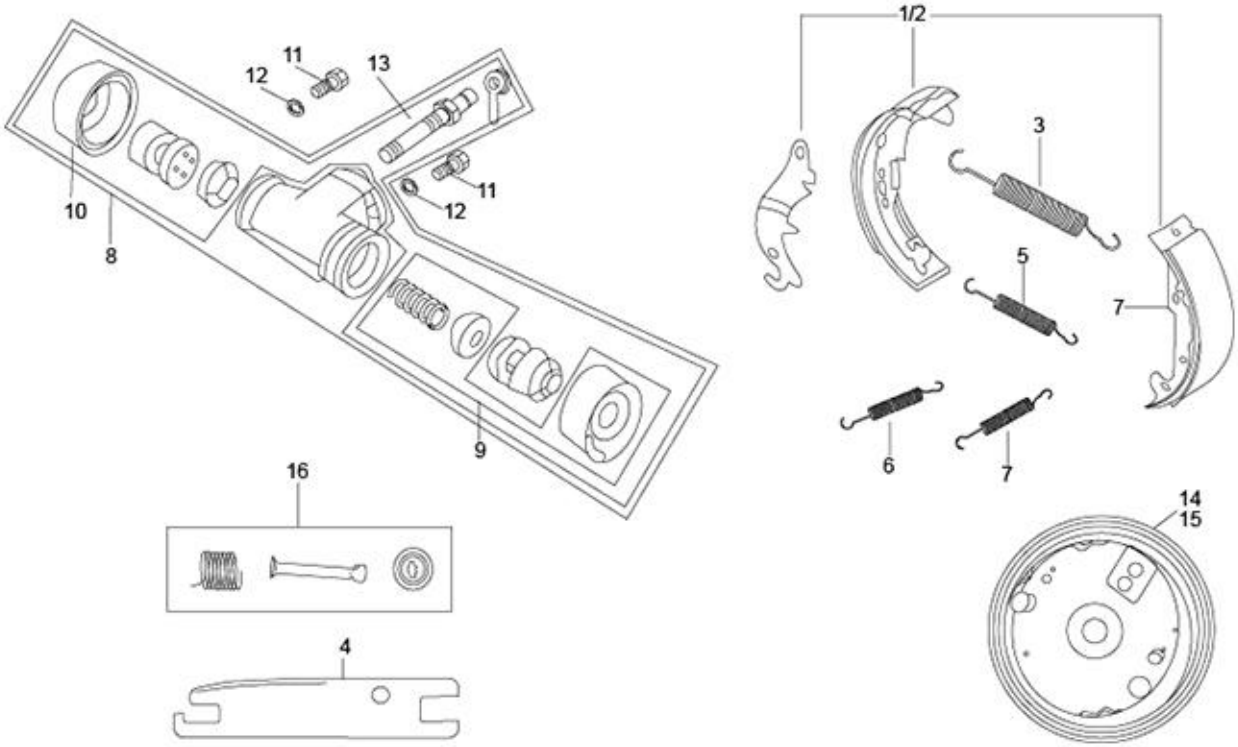
1/2
11
12
13
3
11
12
10
8
5
7
9
6
7
16
14
15
4

79

Print Date: 07-Apr-2022

**PLATE-33**

**Rear Brake Assembly**

| Fig. No. | Part No. | Description | Qty | Remarks |
|---|---|---|---|---|
| 1 | B003330 | REAR BRAKE SHOE KIT LH | 1 | |
| 2 | B003331 | REAR BRAKE SHOE KIT RH (NI) | 1 | |
| 3 | B003004 | SHOE RETURN SPRING (UPPER) | 2 | |
| 4 | B003012 | STRUT REAR | 2 | |
| 5 | B003003 | SHOE RETURN SPRING (LOWER) | 2 | |
| 6 | B003011 | STRUT SPRING RH | 1 | |
| 7 | B003002 | STRUT SPRING | 1 | |
| 8 | B003014 | WHEEL CYLINDER ASSY. DIA.25.4 MM | 1 | |
| 9 | 925574 | MINOR KIT WHL CYL. RR | 1 | |
| 10 | B003328 | MAJOR KIT WHEEL CYLINDER | 1 | |
| 11 | B002486 | BOLT M8 X 35 6G CL 12.9 | 4 | |
| 12 | 12536 | SPRING WASHER | 4 | |
| 13 | B003300 | BLEEDER SCREW | 2 | |
| 14 | B001228 | BRAKE PLATE ASSY. RH | 1 | |
| 15 | B001225 | BRAKE PLATE ASSY. LH (N.I.) | 1 | |
| 16 | B003327 | SHOE HOLD DOWN KIT | 1 | |

80

Print Date: 07-Apr-2022

**PLATE-34**
**CABLES**

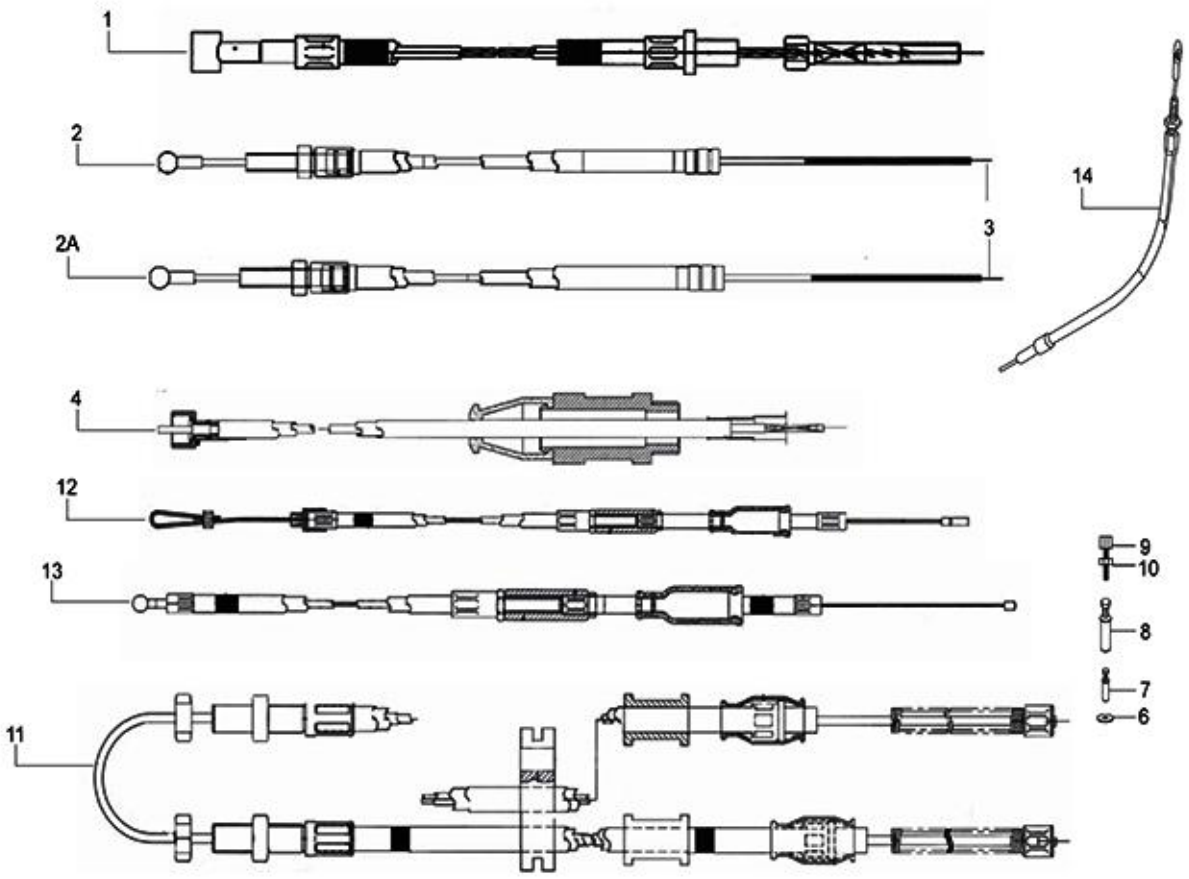
1
2
2A
3
14
4
12
13
9
10
8
7
6
11

81

Print Date: 07-Apr-2022

**PLATE-34**
**CABLES**

| Fig. No. | Part No. | Description | Qty | Remarks |
|---|---|---|---|---|
| 1 | B075960 | COVER REVERSE GEAR CONTROL | 1 | |
| 1 | B075566 | CLUTCH CONTROL TRANSMISSION ASSLY. | 1 | |
| 2 | B073469 | CABLE,GEAR CONTROL ASSLY NO.2 | 1 | |
| 2A | B075716 | CABLE,GEAR CONTROL ASSLY -WHITE | 1 | |
| 3 | 6A000068 | INNER GEAR CONTROL CABLE (BLACK/WHITE) | 1 | |
| 4 | B076208 | SPEEDO CABLE | 1 | |
| 4a | 6A001834 | FLEXIBLE TRANSMISSION CABLE WITH WASHER | 1 | NI,Speedo Inner for B076208 |
| 5 | 6A000070 | REVERSE GEAR INNER CABLE | 1 | |
| 6 | 1A008804 | REVERSE CABLE REACTION BRACKET | 1 | |
| 7 | B076078 | SCREW TERMINAL ASSLY(REVERSE CABLE) | 1 | |
| 8 | B076364 | SCREW TERMINAL ASSY. - GEAR CONTROL | 2 | |
| 9 | 197071 | ADJUSTER SCREW M6 | 2 | |
| 10 | 20106 | HEX NUT M6 | 2 | |
| 11 | B041774 | PARKING BRAKE CABLE ASSY | 1 | |
| 12 | B042356 | ACCELERATOR CABLE WITH JONT (NEW) | 1 | PETROL |
| 13 | B075565 | CABLE ASSLY CHOKE CONTROL | 1 | PETROL |
| 14 | B076036 | ASSLY REVERSE GEAR CONTROL CABLE | 1 | |
| 15 | B075960 | COVER REVERSE GEAR CONTROL | 1 | NI |

**82**

Print Date: 07-Apr-2022

**PLATE-35**

**TMC & BRAKING SYSTEM & TUBES**

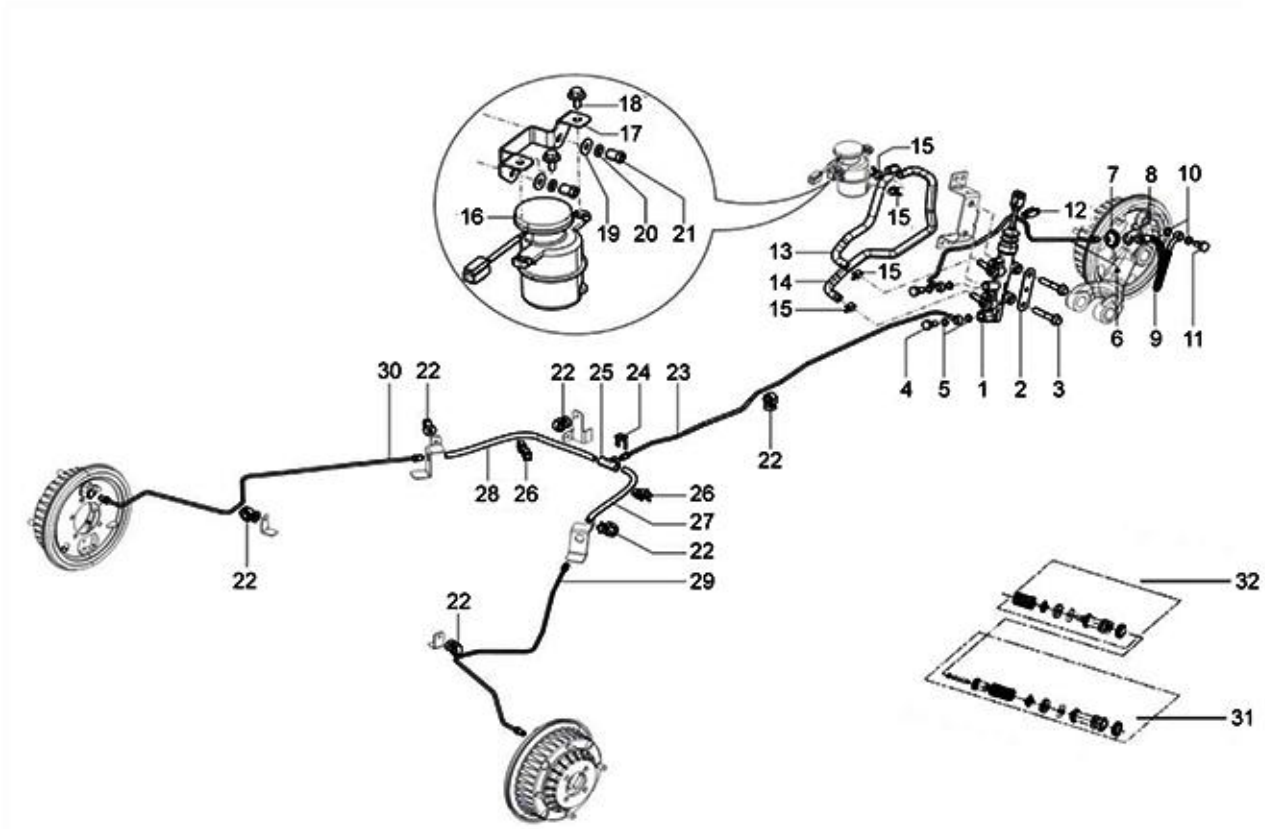
18
17
16
19
20
21
15
15
13
14
15
15
12
7
8
10
6
9
11
4
5
1
2
3
30
22
22
25
24
23
22
28
26
26
27
22
29
22
22
32
31

83

Print Date: 07-Apr-2022

**PLATE-35**

**TMC & BRAKING SYSTEM & TUBES**

| Fig. No. | Part No. | Description | Qty | Remarks |
|---|---|---|---|---|
| 1 | B075485 | TMC ASSY.(19.05) | 1 | |
| 2 | B075950 | TMC SHIELD MTG. BKT. | 1 | |
| 3 | B074999 | HEX BOLT | 2 | |
| 4 | 661229 | BANJO BOLT | 2 | |
| 5 | B076747 | COPPER WASHER | 4 | |
| 6 | B075490 | BRAKE BUNDY TUBE TMC TO FRONT WHEEL | 1 | |
| 7 | 138237 | CAP | 1 | |
| 8 | 48197 | PL WASHER 24X16X1.5 | 1 | |
| 9 | 587624R | FLEXIBLE PIPING FOR FRONT WHEEL BRAKE R | 1 | |
| 10 | 127927R | PACKING | 2 | |
| 11 | 587829 | BENJO BOLT | 1 | |
| 12 | B076818 | SEPARATOR CLAMP | 1 | |
| 13 | B075488 | TUBE NO-1-BRAKE OIL TANK TO TMC | 1 | |
| 14 | B075489 | TUBE NO-2 -BRAKE OIL TANK TO TMC | 1 | |
| 15 | 1A007152 | HOSE CLAMP | 4 | |
| 16 | B073788 | BRAKE OIL TANK | 1 | |
| 17 | NS | NOT SERVICEABLE | 1 | |
| 18 | 661229 | BANJO BOLT | 2 | |
| 19 | 013880 | PLAIN WASHER | 2 | |
| 20 | 016406 | SPRING WASHER | 2 | |
| 21 | 632056 | HEX NUT M6 | 2 | |
| 22 | B076007 | PIPE CLIP 1 WAY | 6 | |
| 23 | B075491 | BRAKE BUNDY TUBE TMC TO REAR WHEEL | 1 | |
| 24 | 136916 | PLATE FOR RETAINING THE BRAKE FLEX. PIPE | 1 | |
| 25 | 643692 | THREE WAY UNION | 1 | |
| 26 | B075838 | CLAMP | 4 | |
| 27 | 644814R | FLEXIBLE BRAKE HOSE | 1 | |
| 28 | B023786R | FLEXIBLE PIPE FOR REAR WHEEL BRAKE | 1 | |
| 29 | B075836 | BRAKE BUNDY TUBE FOR RH REAR WHEEL | 1 | |
| 30 | B075835 | BRAKE BUNDY TUBE FOR LH REAR WHEEL | 1 | |
| 31 | 940067 | MAJOR KIT TMC (UG) | 1 | |
| 32 | 940068 | MINOR KIT TMC (UG) | 1 | |

84

Print Date: 07-Apr-2022

**PLATE-36**
**CONTROL PEDALS - LEVERS**

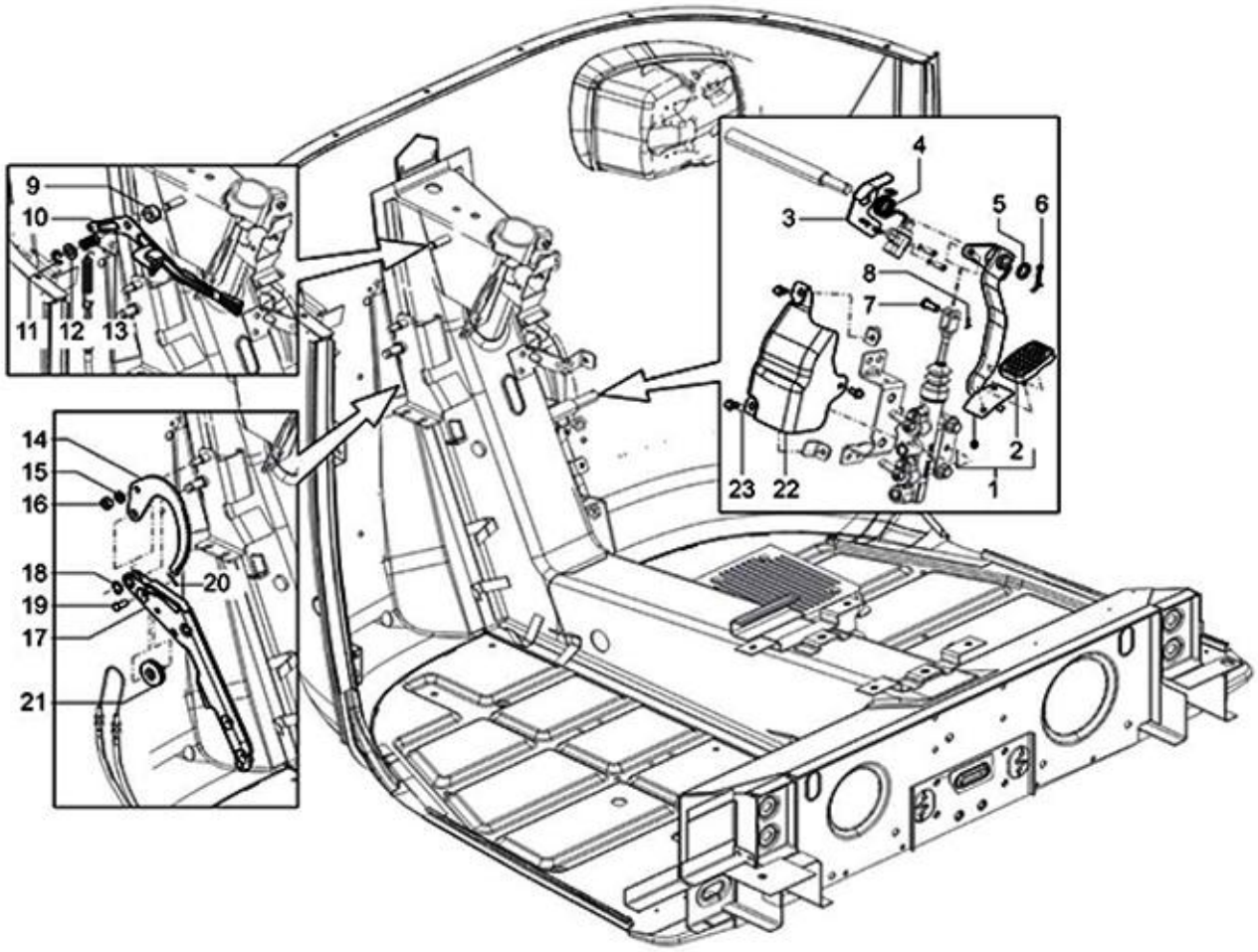
9
10
11
12
13
14
15
16
18
19
17
21
20
4
3
5
6
8
7
2
1
23
22

85

Print Date: 07-Apr-2022

**PLATE-36**

**CONTROL PEDALS - LEVERS**

| Fig. No. | Part No. | Description | Qty | Remarks |
|---|---|---|---|---|
| 1 | B076847 | BRAKE PEDAL ASSLY | 1 | |
| 2 | 567461 | RUBBER PROTECTION FOR PEDAL | 1 | |
| 3 | B075495 | RACKET BRAKE SWITCH MTG. ASSLY | 1 | |
| 4 | B073800 | TORSIONAL SPRING | 1 | |
| 5 | 229524 | WASHER 21X14.3X2 | 1 | |
| 6 | 568737 | SPLIT PIN 4 X 25 (821 0425 2 2) | 1 | |
| 7 | 652001 | PIN | 1 | |
| 8 | 567920 | SPLIT PIN | 1 | |
| 9 | B042317 | SPACER-RC LEVER | 1 | |
| 10 | B076455 | LEVER S/ASSLY. REVERSE | 1 | |
| 11 | 5969 | CIRCLIP DIA 9 E TYPE | 1 | |
| 12 | 6173 | METALLIC PLAIN WASHER (808001026) | 1 | |
| 13 | 108785 | SPRING | 1 | |
| 14 | B042794 | RATCHET , HAND BRAKE CONTROL | 1 | |
| 15 | 016408 | SPRING WASHER | 1 | |
| 16 | 20108 | HEX NUT M8 | 1 | |
| 17 | B075697 | HAND BRAKE CONTROL ASSLY | 1 | |
| 18 | 6411 | EXT CIRCLIP DIA 11 | 1 | |
| 19 | 567899 | CLEVIS PIN | 1 | |
| 20 | 567920 | SPLIT PIN | 1 | |
| 21 | B075475 | PULLEY FOR HAND BRAKE | 1 | |
| 22 | B075949 | TMC PROTECTIVE SHIELD | 1 | |
| 23 | B074999 | HEX BOLT | 3 | |
| 24 | B076036 | ASSLY REVERSE GEAR CONTROL CABLE | 1 | |
| 25 | 604717 | KNOB FOR R.C. | 1 | NI |

86

Print Date: 07-Apr-2022

**PLATE-37**

**SELECTORS - SWITCHES - BUTTONS**

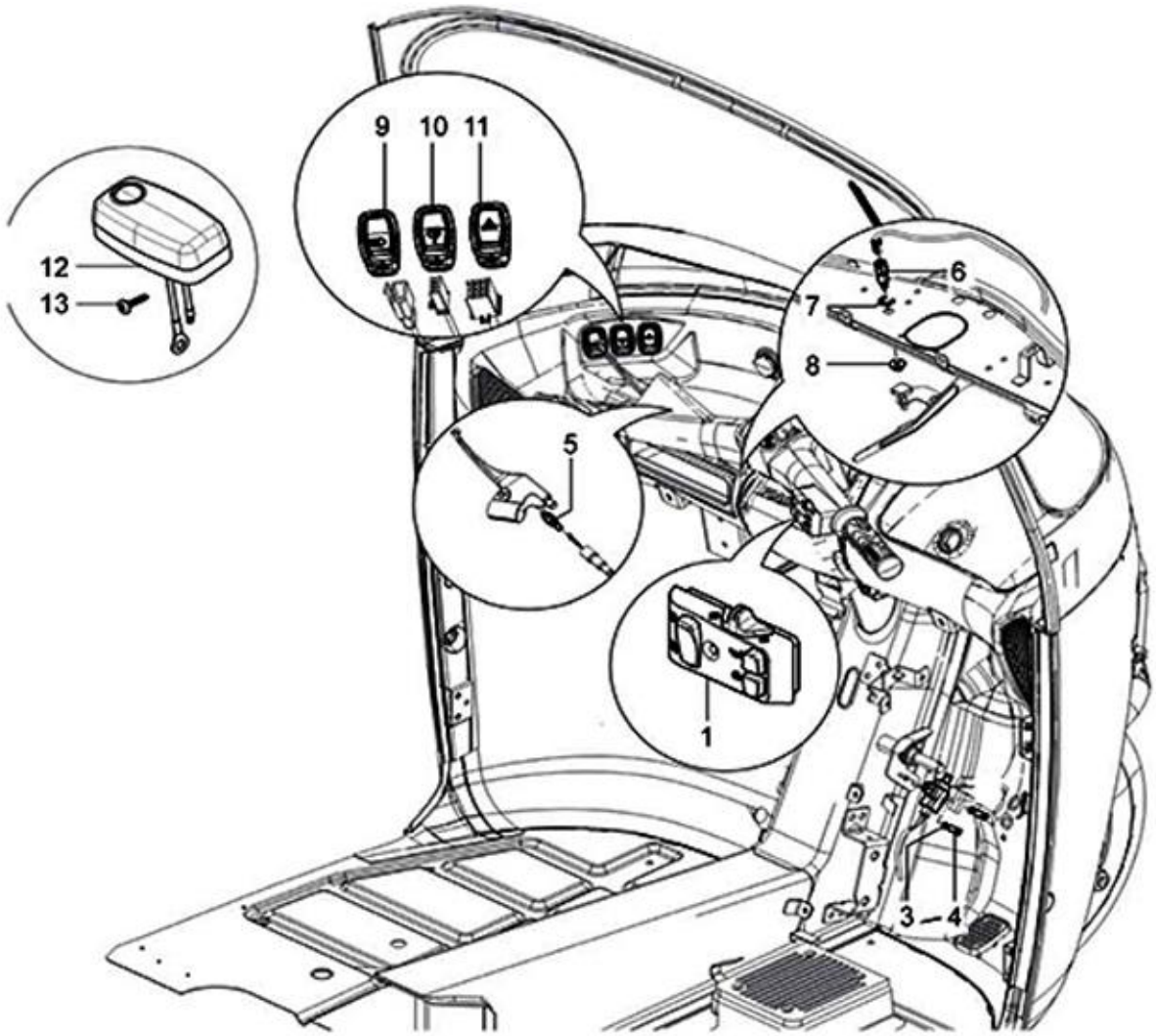
9
10
11
12
13
6
7
8
5
1
3
4

87

Print Date: 07-Apr-2022

**PLATE-37**

**SELECTORS - SWITCHES - BUTTONS**

| Fig. No. | Part No. | Description | Qty | Remarks |
|---|---|---|---|---|
| 1 | B073850R | HBS (ST. BUTTON) - CITY UPGRADE (NEW) _ALL NUOVO MODEL | 1 | |
| 2 | 567498R | BRAKE/REVERSE LIGHT SW (INTEGRAL CAP)-PAV | 1 | |
| 3 | 3054 | PLAIN WASHER | 2 | |
| 4 | B074568 | SCREW TERMINAL | 2 | |
| 5 | 642032 | PUSH BUTTON-CLUTCH | 1 | |
| 6 | 640762 | PUSH BUTTON REVERSE | 1 | |
| 7 | 5969 | CIRCLIP DIA 9 E TYPE | 1 | |
| 8 | B076448 | BUSH REVERSE SWITCH MTG. | 1 | |
| 9 | B073478R | SWITCH 3 POSITION | 1 | |
| 10 | B073479R | WIPER MOTOR SWITCH/ SWITCH WIPER MOTOR | 1 | |
| 11 | B073481R | HAZARD WARNING SWITCH WITH CROWN CAP (12V)(VE) | 1 | |
| 12 | B073715 | CABIN LAMP | 1 | |
| 13 | 15727 | PAN SELF TAPPING SCREW | 2 | |

88

Print Date: 07-Apr-2022

**PLATE-38**
**TAIL LAMP ASSY**

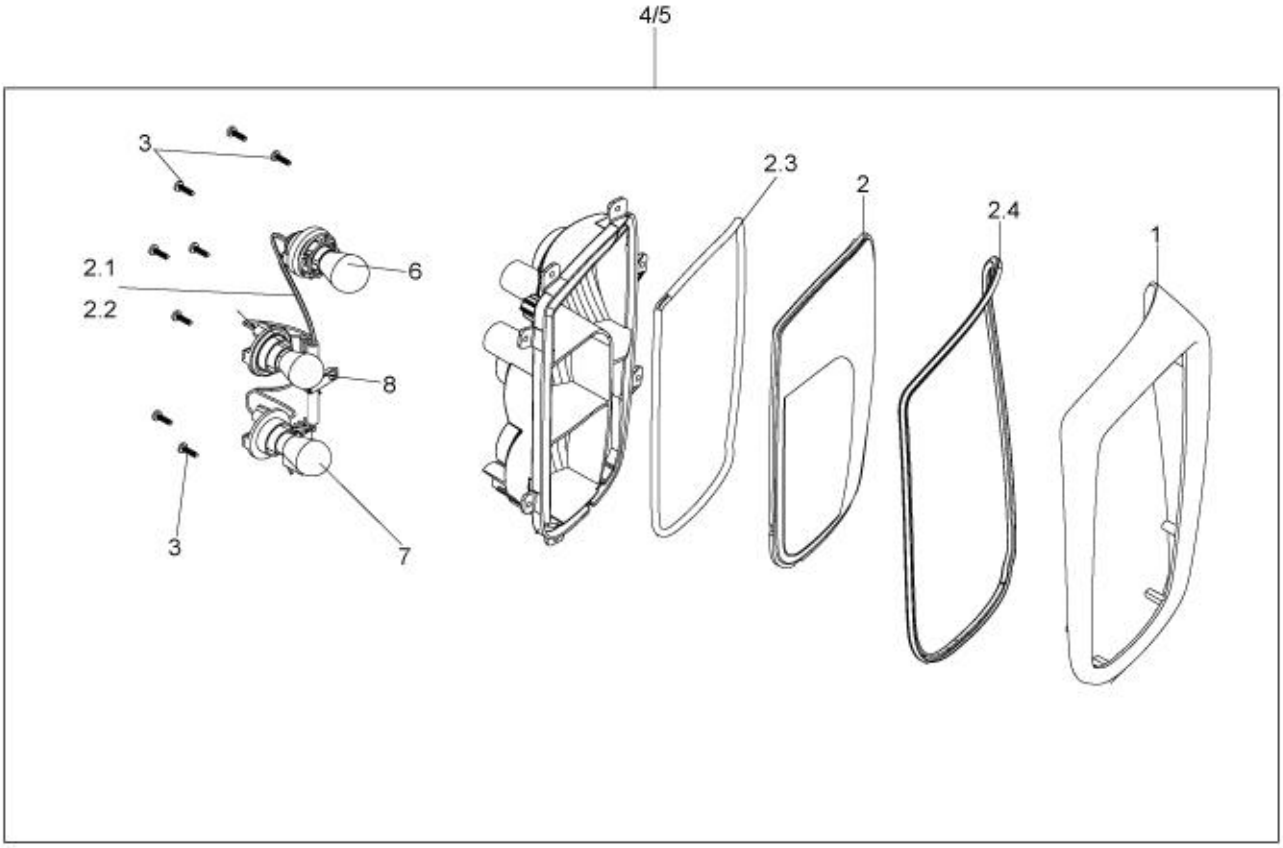
4/5
3
2.1
2.2
6
8
3
7
2.3
2
2.4
1

89

Print Date: 07-Apr-2022

**PLATE-38**

**TAIL LAMP ASSY**

| Fig. No. | Part No. | Description | Qty | Remarks |
|---|---|---|---|---|
| 1 | NEW | NEW PART UNDER DEVELOPMENT | 1 | EXPORT |
| 1 | NEW1 | OUTER BEZEL WITH RUBBER BEADING LH | 1 | EXPORT |
| 2 | 6D000420 | COMPLETE LENS LH | 1 | |
| 2 | 6D000421 | COMPLETE LENS RH | 1 | |
| 2.1 | 6D000424 | WIRE ASSY (WITHOUT REVERSE) | 2 | |
| 2.2 | 6D000435 | WIRE ASSY(WITH REVERSE ) | 2 | |
| 2.3 | 6D000426 | GASKET INBUILT LENS AND HOUSING | 2 | |
| 2.4 | 6D000437 | RUBBER BEADING | 2 | Under Development |
| 3 | 6D000425 | SCREW 3.5X10 | 16 | |
| 4 | 6D001104 | TAILLAMP LH W / REV FUNCTION(ALU GREY) | 1 | EXPORT |
| 5 | 6D001105 | TAILLAMP RH W / REV FUNCTION(ALU GREY) | 1 | EXPORT |
| 6 | 6D000427 | BULB 12V P21/5W | 2 | |
| 7 | 6D000429 | BULB 12V PY21W | 2 | |
| 8 | 6D000428 | BULB 12V P21W | 2 | |

**90**

Print Date: 07-Apr-2022

**PLATE-39**
**MAIN CABLE HARNESS**

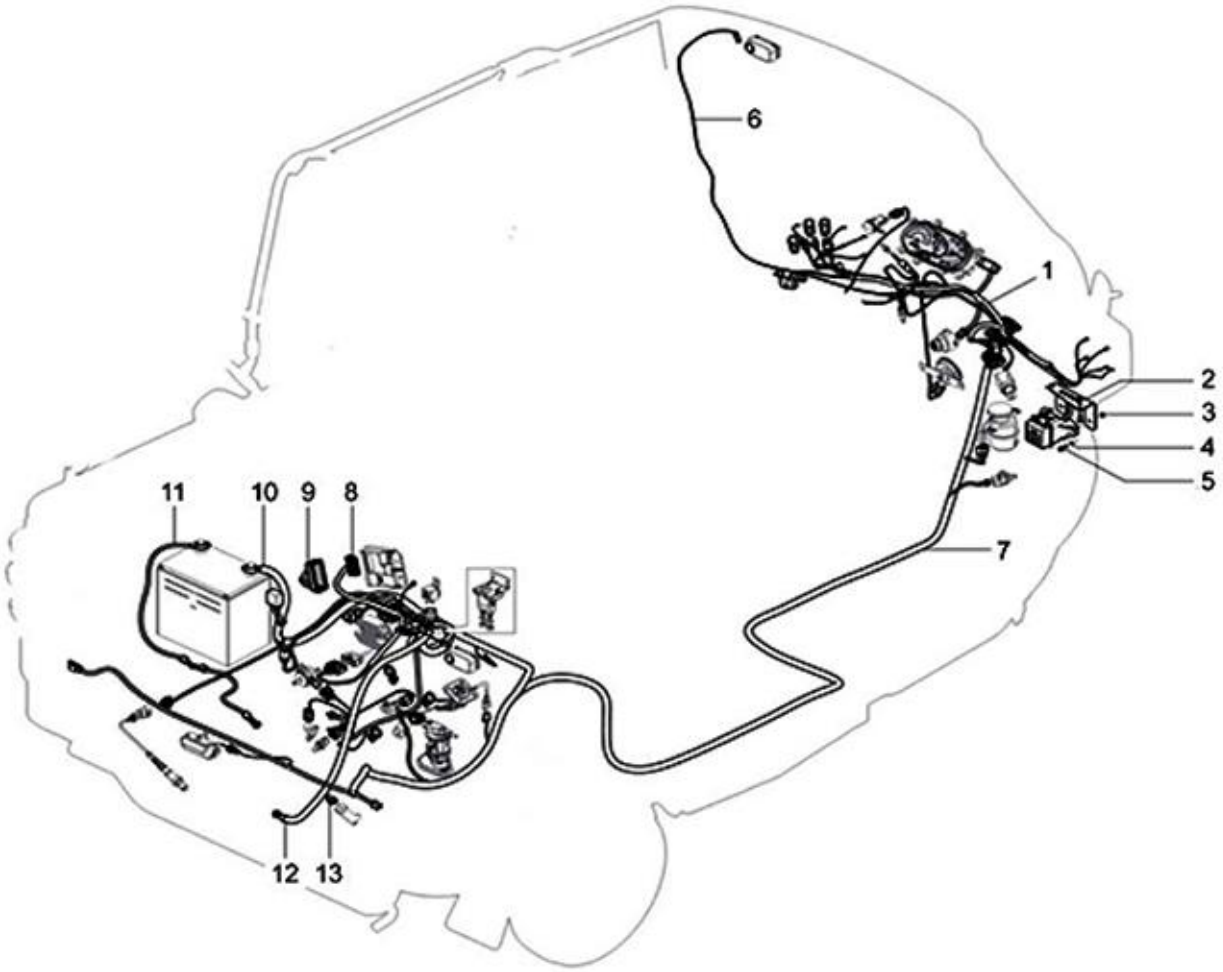
6
1
2
3
4
5
7
11
10
9
8
12
13

91

Print Date: 07-Apr-2022

**PLATE-39**

**MAIN CABLE HARNESS**

| Fig. No. | Part No. | Description | Qty | Remarks |
|---|---|---|---|---|
| 1 | B077754 | W/HS INST. PANEL_CITY PETROL(NEUTRAL) | 1 | PTL |
| 2 | B075693 | MTG BKT ONE WAY FUSE - HOLDER | 1 | |
| 3 | 20105 | PLAIN NUT M5 | 4 | |
| 4 | 6965 | SPRING WASHER DIA 5 | 4 | |
| 5 | 31058 | HEX HEAD SCREW M5 X 16 CC8.8 | 4 | |
| 6 | B073320R | PIG TAIL- CABIN LAMP (NEW)-PASSENGER | 1 | |
| 7 | B077685 | MAIN_WHS _CITY DLX _PETROL (NEUTRAL SW) | 1 | PTL |
| 9 | 569160 | RUBBER BOOT | 1 | |
| 10 | B078212 | BATTERY CABLE +VE-BATT. TO 4ST (CITY) | 1 | |
| 11 | B042063 | BATTERY CABLE NEGATIVE | 1 | |
| 12 | B078213 | BATTERY +VE CABLE-CUT STARTER MOTOR (LPG/CNG) | 1 | |
| 13 | 1A007152 | HOSE CLAMP | 2 | |

92

Print Date: 07-Apr-2022

**PLATE-40**
**ELECTRICAL DEVICES**

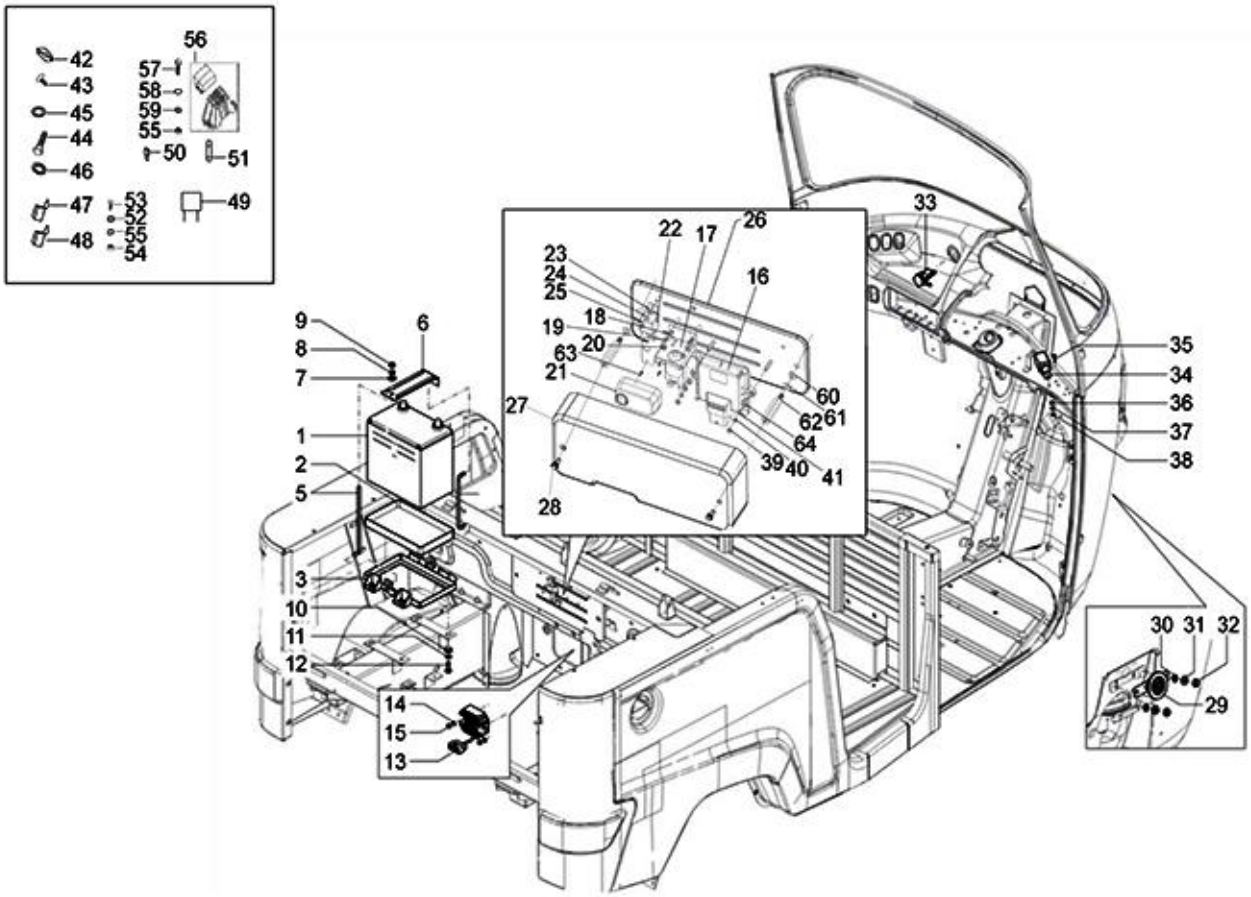
42
43
45
44
46
47
48
56
57
58
59
55
50
51
53
52
55
54
49
9
8
7
6
1
2
5
3
10
11
12
14
15
13
22
17
26
23
24
25
16
18
19
20
63
21
27
28
60
62
61
64
39
40
41
33
35
34
36
37
38
30
31
32
29

93

Print Date: 07-Apr-2022

**PLATE-40**
**ELECTRICAL DEVICES**

| Fig. No. | Part No. | Description | Qty | Remarks |
|---|---|---|---|---|
| 1 | B006544 | BATTERY 12V-35AH | 1 | |
| 2 | 616649 | BATTERY TRAY | 1 | |
| 3 | B042895 | BATTERY STAND S/A | 1 | |
| 4 | 604954 | TENSION ROD | 1 | |
| 5 | 632508 | TENSION ROD ASSY. (BATTERY MOUNTING.) | 1 | |
| 6 | B003978 | BATTERY HOLDING PLATE | 1 | |
| 7 | 2383 | PLAIN WASHER M20X8.5X2 | 1 | |
| 8 | 016408 | SPRING WASHER | 1 | |
| 9 | 20108 | HEX NUT M8 | 1 | |
| 10 | 13861 | PLAIN WASHER 20X8.2X2.5 | 4 | |
| 11 | 016408 | SPRING WASHER | 4 | |
| 12 | 31119 | HEX HD SCREW M8 X 25 | 4 | |
| 13 | 1D000671R | VOLTAGE REGULATOR | 1 | |
| 14 | 3056 | PLAIN WASHER M6 OD12 | 2 | |
| 15 | 20106 | HEX NUT M6 | 2 | |
| 16 | 1D000510 | ELECTRONIC STARTER UNIT | 1 | |
| 17 | 587671R | 4 ST RELAY SOLENOID | 1 | |
| 18 | 3055 | PLAIN WASHER M5 | 2 | |
| 19 | 16405 | SPRING WASHER M5 | 2 | |
| 20 | 20105 | PLAIN NUT M5 | 2 | |
| 21 | B074491 | ENGINE COMPARTMENT LAMP WITH PIGTAIL (UP) | 1 | |
| 22 | B023726R | REMOTE CONTROL SWITCH | 1 | NA |
| 23 | 3056 | PLAIN WASHER M6 OD12 | 1 | |
| 24 | 016406 | SPRING WASHER | 1 | |
| 25 | 31088 | HEX HD SCREW M6 X 16 CL 8.8 (811061623) | 1 | |
| 26 | NS | NOT SERVICEABLE | 1 | |
| 27 | B073492 | PLASTIC COVER-ELECTRICAL CLUSTER | 1 | |
| 28 | B042802 | HEX SCREW | 2 | |
| 29 | B074033 | HORN ASSLY(DIA 70) | 1 | |
| 30 | 3056 | PLAIN WASHER M6 OD12 | 2 | |
| 31 | 016406 | SPRING WASHER | 2 | |
| 32 | 20106 | HEX NUT M6 | 2 | |
| 33 | B074905 | MOBILE CHARGER | 1 | |
| 34 | 680166 | SAFETY STARTER RELAY | 1 | |
| 35 | 31057 | HEX HEAD SCREW M5 X 14 CL 8.8 | 1 | |

94

Print Date: 07-Apr-2022

**PLATE-40**
**ELECTRICAL DEVICES**

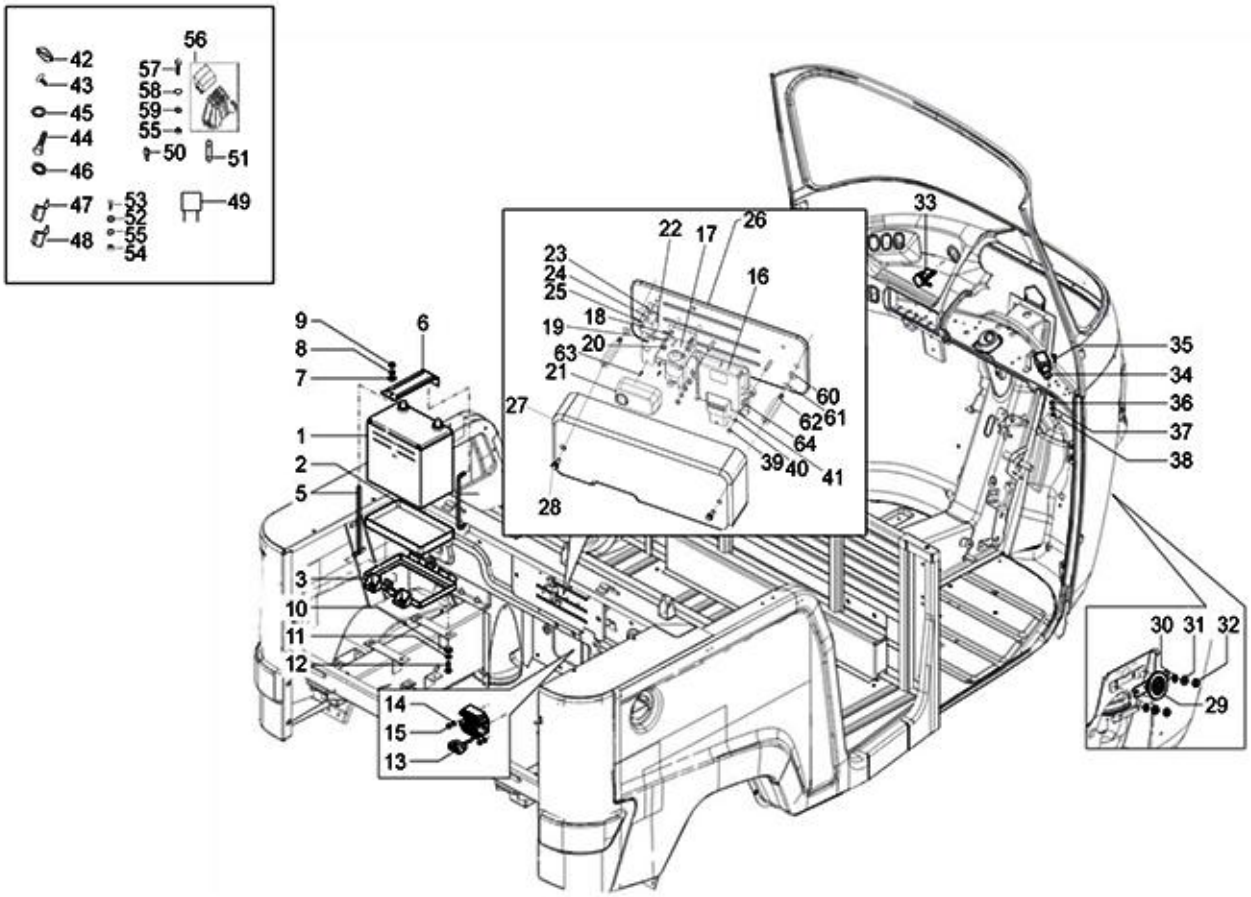
42
43
45
44
46
47
48
56
57
58
59
55
50
51
53
52
55
54
49
9
8
7
6
1
2
5
3
10
11
12
14
15
13
22
17
26
23
24
25
16
19
18
20
63
21
27
28
60
62
61
64
39
40
41
33
35
34
36
37
38
30
31
32
29

95

Print Date: 07-Apr-2022

**PLATE-40**
**ELECTRICAL DEVICES**

| Fig. No. | Part No. | Description | Qty | Remarks |
|---|---|---|---|---|
| 36 | 3055 | PLAIN WASHER M5 | 1 | |
| 37 | 12546 | PLAIN WASHER / MULTI TOOTH LOCK WASHER M5 | 1 | |
| 38 | 20105 | PLAIN NUT M5 | 1 | |
| 39 | 20106 | HEX NUT M6 | 2 | |
| 40 | 016406 | SPRING WASHER | 2 | |
| 41 | 3056 | PLAIN WASHER M6 OD12 | 2 | |
| 42 | B075693 | MTG BKT ONE WAY FUSE - HOLDER | 2 | |
| 43 | 568692 | PAN SELF TAP SCREW 6SG X 16AB | 1 | |
| 44 | 31088 | HEX HD SCREW M6 X 16 CL 8.8 (811061623) | 1 | |
| 45 | 3056 | PLAIN WASHER M6 OD12 | 1 | |
| 46 | 016406 | SPRING WASHER | 1 | |
| 47 | 680166 | SAFETY STARTER RELAY | 1 | |
| 48 | B023727R | CONTACTOR | 2 | |
| 49 | 567706 | FUSE 30 A | 1 | |
| 50 | 604557 | FUSE (10A) | 6 | |
| 51 | 925786 | ECU - FUSE (2A) (N.I) | 1 | |
| 52 | 12546 | PLAIN WASHER / MULTI TOOTH LOCK WASHER M5 | 1 | |
| 53 | 31057 | HEX HEAD SCREW M5 X 14 CL 8.8 | 1 | |
| 54 | 20105 | PLAIN NUT M5 | 5 | |
| 55 | 3055 | PLAIN WASHER M5 | 3 | |
| 56 | 567581 | FOUR POLE FUSE BOX | 1 | |
| 57 | 31058 | HEX HEAD SCREW M5 X 16 CC8.8 | 24 | |
| 58 | 6078 | PLAIN WASHER 12 X 5.2 X 1 | 2 | |
| 59 | 6965 | SPRING WASHER DIA 5 | 4 | |
| 60 | 016408 | SPRING WASHER | 2 | |
| 61 | 3058 | PLAIN WASHER 15X8.4X1.5 | 2 | |
| 62 | B073490 | MTG STUD FOR PLASTIC COVER | 2 | |
| 63 | 15727 | PAN SELF TAPPING SCREW | 2 | |
| 64 | B078506 | BUSH | 2 | |
| 65 | 6D000480 | 5A MINIVAL FUSE BIEGE | 7 | NI |
| 66 | 6D000479 | 10A MINIVAL FUSE RED | 4 | NI |
| 67 | 6D000481 | 15A MINIVAL FUSE BLUE | 2 | NI |
| 68 | 6D000478 | 20A MINIVAL FUSE YELLOW | 1 | NI |
| 69 | 6D000482 | 30A MICRO RELAY | 1 | NI |

96

Print Date: 07-Apr-2022

**PLATE-41**
**WINDSCREEN WIPER**

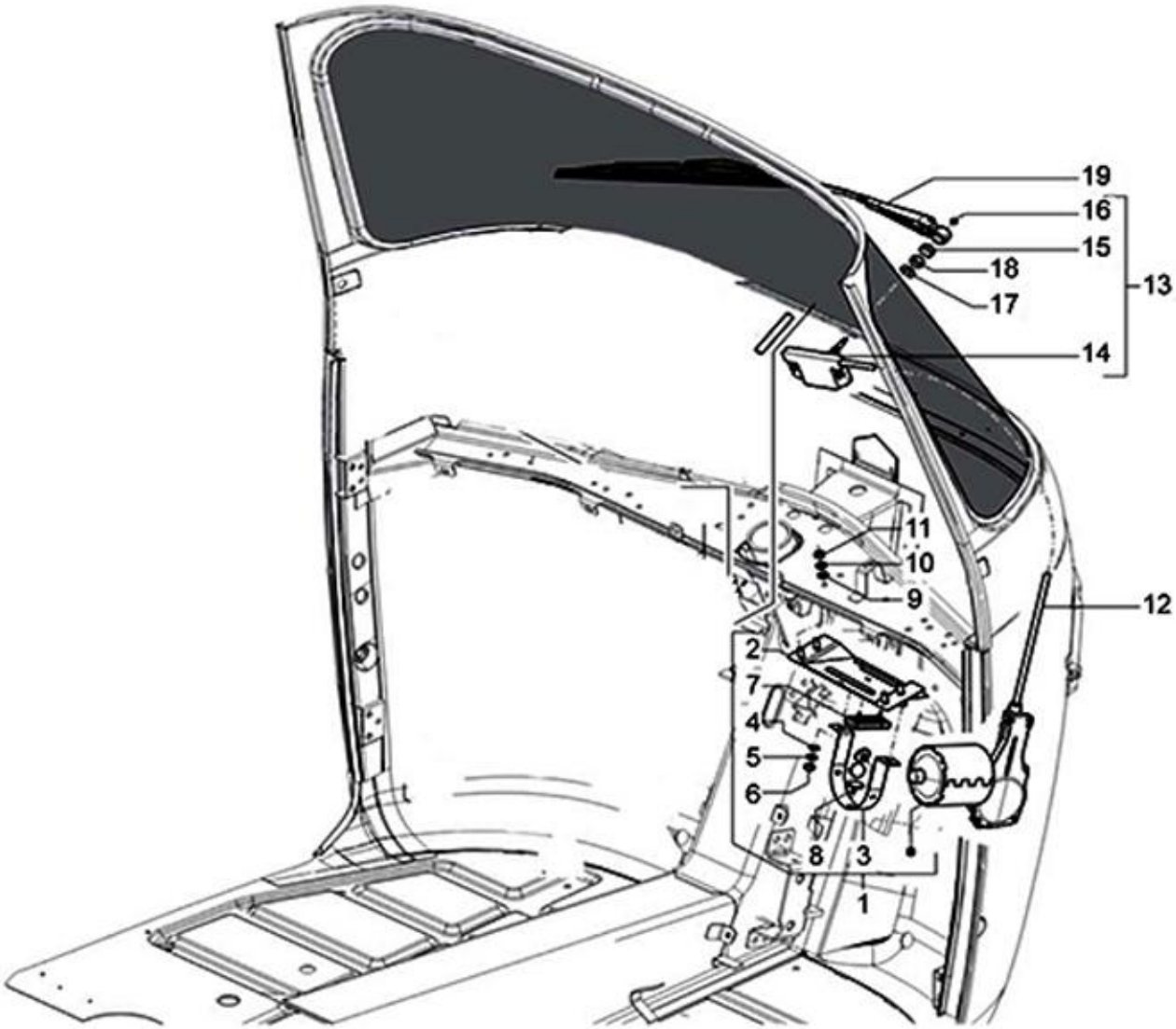
19
16
15
18
17
13
14
11
10
9
12
2
7
4
5
6
8
3
1

97

Print Date: 07-Apr-2022

**PLATE-41**
**WINDSCREEN WIPER**

| Fig. No. | Part No. | Description | Qty | Remarks |
|---|---|---|---|---|
| 1 | B073685 | WIPER MOTOR ASSY. WITH MTG. BKT. | 1 | |
| 2 | 569166 | WIPER MOTOR MOUNTING BRACKET | 1 | |
| 3 | 569177 | STRAP ASSY FOR WIPER MOTOR (N.I.) | 1 | |
| 4 | 016406 | SPRING WASHER | 2 | |
| 5 | 3056 | PLAIN WASHER M6 OD12 | 2 | |
| 6 | 20106 | HEX NUT M6 | 2 | |
| 7 | 569178 | RUBBER PAD FOR WIPER MOTO (N.I.) | 1 | |
| 8 | 940161 | CABLE RACK APE CITY | 1 | NI |
| 9 | 3056 | PLAIN WASHER M6 OD12 | 4 | |
| 10 | 016406 | SPRING WASHER | 4 | |
| 11 | 20106 | HEX NUT M6 | 4 | |
| 12 | B073682 | WIPER BUNDY - MOTOR TO WHEEL BOX | 1 | |
| 13 | 569197 | WHEEL BOX ASSY. (MOD.) | 1 | |
| 14 | NS | NOT SERVICEABLE | 1 | |
| 15 | NS | NOT SERVICEABLE | 1 | |
| 16 | 569165 | DOME NUT | 1 | |
| 17 | 6173 | METALLIC PLAIN WASHER (808001026) | 1 | |
| 18 | 20106 | HEX NUT M6 | 1 | |
| 19 | B073600 | WIPER ARM & BLADE ASSY | 1 | |

98

Print Date: 07-Apr-2022

**PLATE-42**
**Stickers**

1

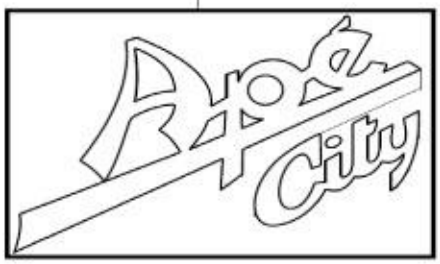


2

3

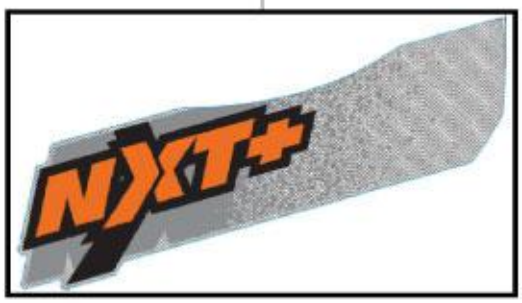


4

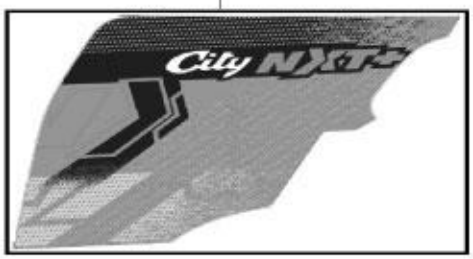


5

6

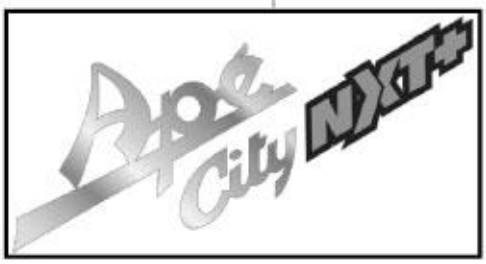

99

Print Date: 07-Apr-2022

**PLATE-42**
**Stickers**

| Fig. No. | Part No. | Description | Qty | Remarks |
|---|---|---|---|---|
| 1 | B078919 | APE CITY STICKER (FRONT PANEL) | 1 | |
| 2 | B078925 | PIAGGIO STICKER (VISUAL BARRIER | 1 | |
| 3 | 6B002978 | NXT+ FRONT DECAL | 1 | |
| 4 | 6B002979 | NXT+ LH SIDE WALL DECAL | 1 | |
| 5 | 6B002980 | NXT+ RH SIDE WALL DECAL | 1 | |
| 6 | 6B002981 | NXT+ REAR DECAL | 1 | |

**100**

Print Date: 07-Apr-2022

**PLATE-16.1**
**Carburetor Child Parts**

1
2
3
4
5
6
7
8
9
10
11
12
13
14
15
16
17

101

Print Date: 07-Apr-2022

**PLATE-16.1**

**Carburetor Child Parts**

| Fig. No. | Part No. | Description | Qty | Remarks |
|---|---|---|---|---|
| 1 | 1A010097 | THROTTLE VALVE | 1 | PTL |
| 2 | 1A011914 | KIT STARTER DEVICE | 1 | PTL |
| 3 | 1A010092 | COMPLETE BODY FLOAT CHAMBER | 1 | PTL |
| 4 | 1A010091 | COMPLETE FLOAT | 1 | PTL |
| 5 | 1A010100 | PISTON SPRING | 1 | PTL |
| 6 | 1A010090 | VALVE COMPLETE FLOAT | 1 | PTL |
| 7 | 1A010098 | JET NEEDLE | 1 | PTL |
| 8 | 1A010023 | NEEDLE JET | 1 | PTL |
| 9 | 1A010095 | FLOAT CHAMBER GASKET | 1 | PTL |
| 10 | 1A010096 | SCREW DRAIN | 1 | PTL |
| 11 | 1A010024 | NEEDLE JET HOLDER | 1 | PTL |
| 12 | 1A010088 | MAXIMUM JET | 1 | PTL |
| 13 | 1A010101 | TOP COMPLETE-PTL | 1 | PTL |
| 14 | 1A010089 | MINIMUM JET | 1 | PTL |
| 15 | 1A010025 | PILOT SCREW | 1 | PTL |
| 16 | 1A010102 | STOP SCREW AND SPRING | 1 | PTL |
| 17 | 1A010026 | PLANE WASHER | 1 | PTL |

**102**

Print Date: 07-Apr-2022

# PARTS INDEX

## APECITY_DLX_NXTPlus_PTL _EXP_BSIII

**103**

Print Date: 07-Apr-2022

| PART NO | BLOCK | PART NO | BLOCK | PART NO | BLOCK |
|---|---|---|---|---|---|
| 000267 | PLATE-10 | 109064 | PLATE-29 | 13861 | PLATE-20 |
| 002139 | PLATE-12 | 109066 | PLATE-29 | 13861 | PLATE-20 |
| 006410 | PLATE-14 | 109117 | PLATE-29 | 13861 | PLATE-40 |
| 009101 | PLATE-12 | 109265 | PLATE-29 | 13880 | PLATE-17 |
| 013880 | PLATE-18 | 109404 | PLATE-28 | 13880 | PLATE-24 |
| 013880 | PLATE-23 | 109635 | PLATE-28 | 150579 | PLATE-29 |
| 013880 | PLATE-23 | 109775 | PLATE-28 | 15335 | PLATE-19 |
| 013880 | PLATE-23 | 109775 | PLATE-28 | 15594 | PLATE-30 |
| 013880 | PLATE-35 | 109892 | PLATE-30 | 157103 | PLATE-30 |
| 016406 | PLATE-15 | 111353 | PLATE-2 | 15727 | PLATE-37 |
| 016406 | PLATE-23 | 111356 | PLATE-31 | 15727 | PLATE-40 |
| 016406 | PLATE-23 | 111498 | PLATE-31 | 157716 | PLATE-21 |
| 016406 | PLATE-28 | 112867R | PLATE-31 | 157716 | PLATE-27 |
| 016406 | PLATE-28 | 112898 | PLATE-2 | 15900 | PLATE-23 |
| 016406 | PLATE-31 | 113278 | PLATE-31 | 15900 | PLATE-23 |
| 016406 | PLATE-35 | 117401 | PLATE-2 | 15900 | PLATE-27 |
| 016406 | PLATE-40 | 117402 | PLATE-2 | 15911 | PLATE-22 |
| 016406 | PLATE-40 | 120164019 | PLATE-13 | 16319 | PLATE-28 |
| 016406 | PLATE-40 | 120170018 | PLATE-13 | 16405 | PLATE-21 |
| 016406 | PLATE-40 | 12138 | PLATE-28 | 16405 | PLATE-21 |
| 016406 | PLATE-41 | 122032014 | PLATE-12 | 16405 | PLATE-22 |
| 016406 | PLATE-41 | 125181 | PLATE-28 | 16405 | PLATE-23 |
| 016408 | PLATE-15 | 125289 | PLATE-29 | 16405 | PLATE-24 |
| 016408 | PLATE-19 | 12536 | PLATE-32 | 16405 | PLATE-24 |
| 016408 | PLATE-19 | 12536 | PLATE-33 | 16405 | PLATE-40 |
| 016408 | PLATE-20 | 12546 | PLATE-22 | 16406 | PLATE-17 |
| 016408 | PLATE-21 | 12546 | PLATE-40 | 16408 | PLATE-17 |
| 016408 | PLATE-21 | 12546 | PLATE-40 | 16408 | PLATE-17 |
| 016408 | PLATE-25 | 127012019 | PLATE-13 | 16410 | PLATE-19 |
| 016408 | PLATE-30 | 127013013 | PLATE-13 | 16410 | PLATE-29 |
| 016408 | PLATE-36 | 127016015 | PLATE-2 | 16410 | PLATE-29 |
| 016408 | PLATE-40 | 127111011 | PLATE-14 | 16410 | PLATE-30 |
| 016408 | PLATE-40 | 127185012 | PLATE-13 | 16410 | PLATE-30 |
| 016408 | PLATE-40 | 127460010 | PLATE-13 | 165121014 | PLATE-2 |
| 018639 | PLATE-7 | 12790 | PLATE-30 | 165155R | PLATE-14 |
| 018639 | PLATE-11 | 127927R | PLATE-35 | 16603 | PLATE-21 |
| 018639 | PLATE-16 | 128633 | PLATE-30 | 16603 | PLATE-23 |
| 018639 | PLATE-18 | 132129 | PLATE-14 | 16603 | PLATE-23 |
| 107718 | PLATE-29 | 132134 | PLATE-14 | 16620 | PLATE-28 |
| 107871 | PLATE-29 | 132136R | PLATE-14 | 16626 | PLATE-28 |
| 108785 | PLATE-36 | 136916 | PLATE-35 | 16626 | PLATE-28 |
| 108873 | PLATE-29 | 137235 | PLATE-29 | 16670 | PLATE-26 |
| 108874 | PLATE-29 | 138237 | PLATE-35 | 16670 | PLATE-26 |

| | | |
|---|---|---|
| | | |

**104**

Print Date: 07-Apr-2022

| PART NO | BLOCK | PART NO | BLOCK | PART NO | BLOCK |
|---|---|---|---|---|---|
| 16670 | PLATE-27 | 1A007047 | PLATE-8 | 1A010089 | PLATE-16.1 |
| 177559 | PLATE-30 | 1A007051 | PLATE-14 | 1A010090 | PLATE-16.1 |
| 180431 | PLATE-29 | 1A007152 | PLATE-35 | 1A010091 | PLATE-16.1 |
| 18630 | PLATE-27 | 1A007152 | PLATE-39 | 1A010092 | PLATE-16.1 |
| 190462 | PLATE-22 | 1A007153 | PLATE-15 | 1A010095 | PLATE-16.1 |
| 196302 | PLATE-29 | 1A007488 | PLATE-15 | 1A010096 | PLATE-16.1 |
| 196302 | PLATE-30 | 1A007489 | PLATE-15 | 1A010097 | PLATE-16.1 |
| 197071 | PLATE-34 | 1A007501 | PLATE-14 | 1A010098 | PLATE-16.1 |
| 1A000024 | PLATE-11 | 1A007565 | PLATE-6 | 1A010100 | PLATE-16.1 |
| 1A000612 | PLATE-2 | 1A007605 | PLATE-14 | 1A010101 | PLATE-16.1 |
| 1A000612 | PLATE-14 | 1A007635 | PLATE-15 | 1A010102 | PLATE-16.1 |
| 1A000708 | PLATE-9 | 1A007663R | PLATE-2 | 1A010119 | PLATE-13 |
| 1A000708 | PLATE-13 | 1A007664R | PLATE-2 | 1A010136 | PLATE-13 |
| 1A000831 | PLATE-11 | 1A007774 | PLATE-2 | 1A010166 | PLATE-12 |
| 1A001073 | PLATE-10 | 1A008077 | PLATE-13 | 1A010208 | PLATE-13 |
| 1A001073 | PLATE-12 | 1A008397 | PLATE-6 | 1A010461 | PLATE-13 |
| 1A001794 | PLATE-18 | 1A008547 | PLATE-14 | 1A010540 | PLATE-13 |
| 1A001795 | PLATE-18 | 1A008559 | PLATE-2 | 1A010548 | PLATE-13 |
| 1A002358 | PLATE-6 | 1A008672 | PLATE-10 | 1A010632 | PLATE-14 |
| 1A002685 | PLATE-2 | 1A008715 | PLATE-13 | 1A010720 | PLATE-2 |
| 1A002691 | PLATE-11 | 1A008804 | PLATE-14 | 1A011066 | PLATE-3 |
| 1A004807 | PLATE-14 | 1A008804 | PLATE-34 | 1A011217 | PLATE-2 |
| 1A005176 | PLATE-14 | 1A008823 | PLATE-2 | 1A011246 | PLATE-2 |
| 1A005178 | PLATE-12 | 1A009093 | PLATE-14 | 1A011500 | PLATE-8 |
| 1A006115 | PLATE-12 | 1A009586 | PLATE-9 | 1A011778 | PLATE-14 |
| 1A006545 | PLATE-7 | 1A009587 | PLATE-9 | 1A011914 | PLATE-16.1 |
| 1A006592 | PLATE-15 | 1A009588 | PLATE-9 | 1A011940 | PLATE-13 |
| 1A006593 | PLATE-15 | 1A009589 | PLATE-9 | 1A012150 | PLATE-13 |
| 1A006701 | PLATE-12 | 1A009590 | PLATE-9 | 1A012151 | PLATE-13 |
| 1A006740 | PLATE-11 | 1A009591 | PLATE-9 | 1A012153 | PLATE-13 |
| 1A006742 | PLATE-11 | 1A009592 | PLATE-9 | 1A012154 | PLATE-13 |
| 1A006743 | PLATE-11 | 1A009593 | PLATE-9 | 1A012155 | PLATE-13 |
| 1A006812 | PLATE-8 | 1A009621R | PLATE-4 | 1A012156 | PLATE-13 |
| 1A006856 | PLATE-2 | 1A009632 | PLATE-16 | 1A012157 | PLATE-13 |
| 1A006858 | PLATE-9 | 1A009762 | PLATE-8 | 1A012158 | PLATE-13 |
| 1A006877 | PLATE-8 | 1A010001 | PLATE-11 | 1A012159 | PLATE-13 |
| 1A006899 | PLATE-6 | 1A010016 | PLATE-12 | 1A012160 | PLATE-13 |
| 1A006901 | PLATE-6 | 1A010023 | PLATE-16.1 | 1A012161 | PLATE-13 |
| 1A006970 | PLATE-12 | 1A010024 | PLATE-16.1 | 1A012181 | PLATE-12 |
| 1A006988 | PLATE-10 | 1A010025 | PLATE-16.1 | 1A012182 | PLATE-12 |
| 1A007026 | PLATE-2 | 1A010026 | PLATE-16.1 | 1A012334 | PLATE-12 |
| 1A007028 | PLATE-2 | 1A010035 | PLATE-12 | 1A012845 | PLATE-13 |
| 1A007029 | PLATE-12 | 1A010088 | PLATE-16.1 | 1A012846 | PLATE-12 |

| | | |
|---|---|---|
| | | |

**105**

Print Date: 07-Apr-2022

| PART NO | BLOCK | PART NO | BLOCK | PART NO | BLOCK |
|---|---|---|---|---|---|
| 1A012925 | PLATE-5 | 20106 | PLATE-21 | 237246 | PLATE-30 |
| 1A013013 | PLATE-6 | 20106 | PLATE-23 | 237246 | PLATE-30 |
| 1A013159 | PLATE-10 | 20106 | PLATE-23 | 2383 | PLATE-15 |
| 1A014335 | PLATE-17 | 20106 | PLATE-34 | 2383 | PLATE-17 |
| 1A014871 | PLATE-12 | 20106 | PLATE-40 | 2383 | PLATE-17 |
| 1A014872 | PLATE-12 | 20106 | PLATE-40 | 2383 | PLATE-19 |
| 1A014873 | PLATE-12 | 20106 | PLATE-40 | 2383 | PLATE-19 |
| 1A014874 | PLATE-12 | 20106 | PLATE-41 | 2383 | PLATE-19 |
| 1A016737 | PLATE-8 | 20106 | PLATE-41 | 2383 | PLATE-20 |
| 1A016964 | PLATE-14 | 20108 | PLATE-15 | 2383 | PLATE-21 |
| 1A016964 | PLATE-2 | 20108 | PLATE-19 | 2383 | PLATE-40 |
| 1A017112 | PLATE-12 | 20108 | PLATE-19 | 2388 | PLATE-21 |
| 1A018038 | PLATE-9 | 20108 | PLATE-20 | 243303R | PLATE-30 |
| 1A018094 | PLATE-4 | 20108 | PLATE-20 | 265091 | PLATE-19 |
| 1A018212 | PLATE-9 | 20108 | PLATE-20 | 265091 | PLATE-19 |
| 1A018642R | PLATE-9 | 20108 | PLATE-21 | 267065 | PLATE-30 |
| 1A020456 | PLATE-9 | 20108 | PLATE-21 | 267065 | PLATE-30 |
| 1A021042 | PLATE-17 | 20108 | PLATE-36 | 267068 | PLATE-30 |
| 1A021204 | PLATE-9 | 20108 | PLATE-40 | 269755 | PLATE-2 |
| 1D000510 | PLATE-40 | 20110 | PLATE-19 | 269755 | PLATE-6 |
| 1D000671R | PLATE-40 | 20110 | PLATE-29 | 272178 | PLATE-19 |
| 1D001138 | PLATE-8 | 20110 | PLATE-29 | 285536 | PLATE-8 |
| 1D001846 | PLATE-10 | 20110 | PLATE-30 | 286328 | PLATE-19 |
| 1D001847 | PLATE-10 | 20110 | PLATE-30 | 286328 | PLATE-19 |
| 1D001894 | PLATE-7 | 20359 | PLATE-30 | 286328 | PLATE-30 |
| 1D001894 | PLATE-18 | 21118 | PLATE-12 | 288730 | PLATE-14 |
| 1E002770 | PLATE-28 | 21118 | PLATE-30 | 30074 | PLATE-17 |
| 1E002771 | PLATE-28 | 216369 | PLATE-24 | 30074 | PLATE-21 |
| 1E002772 | PLATE-28 | 220575 | PLATE-14 | 30209R | PLATE-29 |
| 20104 | PLATE-20 | 226596 | PLATE-30 | 30242 | PLATE-22 |
| 20104 | PLATE-22 | 226596 | PLATE-30 | 3054 | PLATE-20 |
| 20105 | PLATE-21 | 226661 | PLATE-30 | 3054 | PLATE-21 |
| 20105 | PLATE-22 | 226661 | PLATE-30 | 3054 | PLATE-22 |
| 20105 | PLATE-23 | 226662 | PLATE-30 | 3054 | PLATE-26 |
| 20105 | PLATE-23 | 226662 | PLATE-30 | 3054 | PLATE-37 |
| 20105 | PLATE-27 | 229524 | PLATE-36 | 3055 | PLATE-23 |
| 20105 | PLATE-39 | 231370 | PLATE-19 | 3055 | PLATE-26 |
| 20105 | PLATE-40 | 231370 | PLATE-30 | 3055 | PLATE-40 |
| 20105 | PLATE-40 | 231370 | PLATE-30 | 3055 | PLATE-40 |
| 20105 | PLATE-40 | 231370 | PLATE-30 | 3055 | PLATE-40 |
| 20106 | PLATE-41 | 231370 | PLATE-30 | 3056 | PLATE-21 |
| 20106 | PLATE-15 | 231370 | PLATE-30 | 3056 | PLATE-21 |
| 20106 | PLATE-17 | 231370 | PLATE-31 | 3056 | PLATE-23 |

| | | |
|---|---|---|
| | | |

**106**

Print Date: 07-Apr-2022

| PART NO | BLOCK | PART NO | BLOCK | PART NO | BLOCK |
|---|---|---|---|---|---|
| 3056 | PLATE-31 | 434716 | PLATE-5 | 569244 | PLATE-19 |
| 3056 | PLATE-40 | 435571 | PLATE-4 | 569244 | PLATE-19 |
| 3056 | PLATE-40 | 436947 | PLATE-17 | 569375 | PLATE-19 |
| 3056 | PLATE-40 | 478261 | PLATE-13 | 569377 | PLATE-19 |
| 3056 | PLATE-40 | 479986 | PLATE-8 | 58273R | PLATE-6 |
| 3056 | PLATE-40 | 48197 | PLATE-35 | 587617 | PLATE-30 |
| 3056 | PLATE-41 | 482335 | PLATE-4 | 587624R | PLATE-35 |
| 3056 | PLATE-41 | 483711 | PLATE-5 | 587671R | PLATE-40 |
| 3058 | PLATE-20 | 485655 | PLATE-2 | 587829 | PLATE-35 |
| 3058 | PLATE-20 | 485703 | PLATE-2 | 587902 | PLATE-28 |
| 3058 | PLATE-21 | 485703 | PLATE-6 | 587904 | PLATE-28 |
| 3058 | PLATE-21 | 485868 | PLATE-6 | 5969 | PLATE-36 |
| 3058 | PLATE-21 | 566545 | PLATE-29 | 5969 | PLATE-37 |
| 3058 | PLATE-21 | 567454 | PLATE-25 | 604535 | PLATE-30 |
| 3058 | PLATE-25 | 567456 | PLATE-25 | 604553 | PLATE-15 |
| 3058 | PLATE-40 | 567458 | PLATE-25 | 604557 | PLATE-40 |
| 3068 | PLATE-30 | 567461 | PLATE-36 | 604603 | PLATE-23 |
| 31056 | PLATE-24 | 567473 | PLATE-29 | 604717 | PLATE-36 |
| 31056 | PLATE-24 | 567498R | PLATE-37 | 604756 | PLATE-15 |
| 31057 | PLATE-23 | 567581 | PLATE-40 | 604756 | PLATE-15 |
| 31057 | PLATE-40 | 567593 | PLATE-27 | 604756 | PLATE-20 |
| 31057 | PLATE-40 | 567706 | PLATE-40 | 604758 | PLATE-29 |
| 31058 | PLATE-27 | 567878R | PLATE-24 | 604759 | PLATE-29 |
| 31058 | PLATE-39 | 567899 | PLATE-36 | 604908 | PLATE-24 |
| 31058 | PLATE-40 | 567920 | PLATE-26 | 604909 | PLATE-24 |
| 31088 | PLATE-21 | 567920 | PLATE-36 | 604948 | PLATE-19 |
| 31088 | PLATE-23 | 567920 | PLATE-36 | 604954 | PLATE-20 |
| 31088 | PLATE-40 | 567990 | PLATE-29 | 604954 | PLATE-40 |
| 31088 | PLATE-40 | 567991 | PLATE-29 | 60565 | PLATE-28 |
| 31089 | PLATE-17 | 567992 | PLATE-29 | 6066 | PLATE-29 |
| 31089 | PLATE-23 | 567993 | PLATE-29 | 6066 | PLATE-30 |
| 31089 | PLATE-28 | 568095 | PLATE-29 | 6078 | PLATE-26 |
| 31089 | PLATE-28 | 568689 | PLATE-19 | 6078 | PLATE-40 |
| 31092 | PLATE-31 | 568692 | PLATE-40 | 616649 | PLATE-20 |
| 31116 | PLATE-21 | 568737 | PLATE-36 | 616649 | PLATE-40 |
| 31118 | PLATE-20 | 569160 | PLATE-39 | 6173 | PLATE-41 |
| 31118 | PLATE-21 | 569165 | PLATE-41 | 6173 | PLATE-36 |
| 31119 | PLATE-25 | 569166 | PLATE-41 | 632056 | PLATE-35 |
| 31119 | PLATE-40 | 569177 | PLATE-41 | 632158 | PLATE-28 |
| 31122 | PLATE-21 | 569178 | PLATE-41 | 632158 | PLATE-28 |
| 31154 | PLATE-19 | 569197 | PLATE-41 | 632508 | PLATE-20 |
| 432142 | PLATE-2 | 569241 | PLATE-19 | 632508 | PLATE-40 |
| 434541 | PLATE-6 | 569241 | PLATE-19 | 63440 | PLATE-32 |

| | | |
|---|---|---|
| | | |

**107**

Print Date: 07-Apr-2022

| PART NO | BLOCK | PART NO | BLOCK | PART NO | BLOCK |
|---|---|---|---|---|---|
| 639088 | PLATE-21 | 6B000637 | PLATE-21 | 6B002757 | PLATE-27 |
| 640762 | PLATE-37 | 6B000638 | PLATE-21 | 6B002757 | PLATE-27 |
| 6411 | PLATE-36 | 6B000808 | PLATE-21 | 6B002781 | PLATE-21 |
| 642032 | PLATE-37 | 6B001129 | PLATE-21 | 6B002792 | PLATE-27 |
| 642537 | PLATE-18 | 6B001137 | PLATE-21 | 6B002796 | PLATE-27 |
| 643149 | PLATE-18 | 6B001140 | PLATE-21 | 6B002827 | PLATE-27 |
| 643367 | PLATE-18 | 6B001170 | PLATE-21 | 6B002955 | PLATE-21 |
| 643691 | PLATE-26 | 6B001331ED | PLATE-21 | 6B002956 | PLATE-21 |
| 643692 | PLATE-35 | 6B001332ED | PLATE-21 | 6B002957 | PLATE-21 |
| 643741 | PLATE-30 | 6B001388 | PLATE-21 | 6B002958 | PLATE-21 |
| 643741 | PLATE-30 | 6B001389 | PLATE-21 | 6B002959 | PLATE-21 |
| 643772R | PLATE-29 | 6B001455 | PLATE-21 | 6B002960 | PLATE-21 |
| 644299 | PLATE-24 | 6B001517 | PLATE-21 | 6B002978 | PLATE-42 |
| 644814R | PLATE-35 | 6B001518 | PLATE-21 | 6B002979 | PLATE-42 |
| 645037 | PLATE-15 | 6B001519 | PLATE-21 | 6B002980 | PLATE-42 |
| 6450 | PLATE-14 | 6B001520 | PLATE-21 | 6B002981 | PLATE-42 |
| 652001 | PLATE-36 | 6B001539 | PLATE-21 | 6B003006 | PLATE-27 |
| 652562 | PLATE-20 | 6B001654 | PLATE-21 | 6B003007 | PLATE-27 |
| 660168 | PLATE-15 | 6B001698BL | PLATE-20 | 6B003008 | PLATE-27 |
| 660168 | PLATE-20 | 6B001698BW | PLATE-20 | 6B003024 | PLATE-26 |
| 660168 | PLATE-21 | 6B001698BY | PLATE-20 | 6B003027 | PLATE-28 |
| 660168 | PLATE-26 | 6B001698CB | PLATE-20 | 6B003028 | PLATE-26 |
| 661229 | PLATE-35 | 6B001698CO | PLATE-20 | 6B003032 | PLATE-26 |
| 661229 | PLATE-35 | 6B001698EG | PLATE-20 | 6B003040 | PLATE-21 |
| 661266 | PLATE-30 | 6B001698GY | PLATE-20 | 6B003045 | PLATE-21 |
| 661266 | PLATE-30 | 6B001698NB | PLATE-20 | 6B003047 | PLATE-21 |
| 661267 | PLATE-30 | 6B001698PA | PLATE-20 | 6B003050 | PLATE-21 |
| 661282 | PLATE-30 | 6B001698PB | PLATE-20 | 6B003144 | PLATE-27 |
| 661925 | PLATE-26 | 6B001698WR | PLATE-20 | 6B003146 | PLATE-27 |
| 661925 | PLATE-27 | 6B001994 | PLATE-25 | 6B003148 | PLATE-27 |
| 6632187Z01 | PLATE-21 | 6B002450R | PLATE-21 | 6B003150 | PLATE-27 |
| 6650 | PLATE-30 | 6B002549BL | PLATE-21 | 6C000016 | PLATE-31 |
| 6733 | PLATE-29 | 6B002549BW | PLATE-21 | 6C000041 | PLATE-31 |
| 680166 | PLATE-40 | 6B002549BY | PLATE-21 | 6C000190 | PLATE-29 |
| 680166 | PLATE-40 | 6B002549CB | PLATE-21 | 6C000191 | PLATE-29 |
| 6965 | PLATE-27 | 6B002549CO | PLATE-21 | 6C000231 | PLATE-30 |
| 6965 | PLATE-39 | 6B002549EG | PLATE-21 | 6C000312R | PLATE-31 |
| 6965 | PLATE-40 | 6B002549GY | PLATE-21 | 6C000430 | PLATE-29 |
| 6A000068 | PLATE-34 | 6B002549NB | PLATE-21 | 6C000430 | PLATE-30 |
| 6A000070 | PLATE-34 | 6B002549PA | PLATE-21 | 6C000530 | PLATE-30 |
| 6A000200 | PLATE-15 | 6B002549PB | PLATE-21 | 6D000143R | PLATE-27 |
| 6A000209 | PLATE-28 | 6B002549WR | PLATE-21 | 6D000144R | PLATE-27 |
| 6A001834 | PLATE-34 | 6B002586 | PLATE-27 | 6D000145R | PLATE-27 |

| | | |
|---|---|---|
| | | |

**108**

Print Date: 07-Apr-2022

| PART NO | BLOCK | PART NO | BLOCK | PART NO | BLOCK |
|---|---|---|---|---|---|
| 6D000146R | PLATE-27 | 884222808 | PLATE-2 | B003300 | PLATE-32 |
| 6D000305 | PLATE-27 | 920088 | PLATE-15 | B003300 | PLATE-33 |
| 6D000374 | PLATE-21 | 925574 | PLATE-33 | B003324 | PLATE-32 |
| 6D000420 | PLATE-38 | 925581 | PLATE-27 | B003325 | PLATE-32 |
| 6D000421 | PLATE-38 | 925786 | PLATE-40 | B003327 | PLATE-33 |
| 6D000424 | PLATE-38 | 925888 | PLATE-24 | B003328 | PLATE-33 |
| 6D000425 | PLATE-38 | 940028 | PLATE-14 | B003330 | PLATE-33 |
| 6D000426 | PLATE-38 | 940066 | PLATE-29 | B003331 | PLATE-33 |
| 6D000427 | PLATE-38 | 940067 | PLATE-35 | B003652 | PLATE-21 |
| 6D000428 | PLATE-38 | 940068 | PLATE-35 | B003978 | PLATE-20 |
| 6D000429 | PLATE-38 | 940069 | PLATE-15 | B003978 | PLATE-40 |
| 6D000435 | PLATE-38 | 940071 | PLATE-15 | B006509 | PLATE-32 |
| 6D000437 | PLATE-38 | 940072 | PLATE-15 | B006544 | PLATE-20 |
| 6D000478 | PLATE-40 | 940090 | PLATE-21 | B006544 | PLATE-40 |
| 6D000479 | PLATE-40 | 940161 | PLATE-41 | B008915 | PLATE-29 |
| 6D000480 | PLATE-40 | 963486 | PLATE-4 | B014063 | PLATE-18 |
| 6D000481 | PLATE-40 | B001225 | PLATE-33 | B014066 | PLATE-18 |
| 6D000482 | PLATE-40 | B001228 | PLATE-33 | B014555 | PLATE-4 |
| 6D000948 | PLATE-26 | B001301 | PLATE-29 | B014684 | PLATE-5 |
| 6D000952 | PLATE-26 | B001315 | PLATE-29 | B014705 | PLATE-5 |
| 6D001104 | PLATE-38 | B001315 | PLATE-30 | B014706 | PLATE-5 |
| 6D001105 | PLATE-38 | B001316 | PLATE-29 | B014732 | PLATE-7 |
| 7066R | PLATE-2 | B001316 | PLATE-30 | B014755 | PLATE-2 |
| 74414 | PLATE-29 | B001788 | PLATE-23 | B014760 | PLATE-6 |
| 74521 | PLATE-29 | B001789 | PLATE-23 | B015288 | PLATE-5 |
| 75708 | PLATE-29 | B002334 | PLATE-21 | B015483 | PLATE-6 |
| 8080 | PLATE-26 | B002486 | PLATE-33 | B015543 | PLATE-16 |
| 812061656 | PLATE-29 | B003002 | PLATE-32 | B015592 | PLATE-2 |
| 812061656 | PLATE-30 | B003002 | PLATE-33 | B015598 | PLATE-8 |
| 82635R | PLATE-8 | B003003 | PLATE-32 | B015943 | PLATE-8 |
| 829661 | PLATE-2 | B003003 | PLATE-33 | B016120 | PLATE-9 |
| 83040R | PLATE-6 | B003004 | PLATE-32 | B016144 | PLATE-3 |
| 83041R | PLATE-6 | B003004 | PLATE-33 | B016148 | PLATE-9 |
| 83054R | PLATE-5 | B003008 | PLATE-32 | B016192 | PLATE-11 |
| 842001600 | PLATE-13 | B003011 | PLATE-33 | B016368 | PLATE-5 |
| 843000500 | PLATE-14 | B003012 | PLATE-33 | B016552 | PLATE-18 |
| 843000809 | PLATE-13 | B003014 | PLATE-33 | B016611 | PLATE-12 |
| 843307 | PLATE-5 | B003017 | PLATE-32 | B016620 | PLATE-11 |
| 847928 | PLATE-6 | B003114 | PLATE-24 | B016774 | PLATE-9 |
| 87067 | PLATE-29 | B003115 | PLATE-24 | B016774 | PLATE-16 |
| 87067 | PLATE-29 | B003282 | PLATE-24 | B016774 | PLATE-6 |
| 872816 | PLATE-18 | B003282 | PLATE-24 | B016939 | PLATE-5 |
| 8771 | PLATE-29 | B003286 | PLATE-19 | B017113 | PLATE-6 |

| | | |
|---|---|---|
| | | |

**109**

Print Date: 07-Apr-2022

| PART NO | BLOCK | PART NO | BLOCK | PART NO | BLOCK |
|---|---|---|---|---|---|
| B017165 | PLATE-6 | B041876 | PLATE-25 | B073850R | PLATE-37 |
| B017189 | PLATE-9 | B042063 | PLATE-39 | B073852 | PLATE-23 |
| B017323 | PLATE-6 | B042170 | PLATE-26 | B073853 | PLATE-23 |
| B017323 | PLATE-6 | B042317 | PLATE-36 | B073882BW | PLATE-23 |
| B017431 | PLATE-6 | B042356 | PLATE-34 | B073882BY | PLATE-23 |
| B017431 | PLATE-6 | B042486 | PLATE-2 | B073882CB | PLATE-23 |
| B017438 | PLATE-5 | B042794 | PLATE-36 | B073882EG | PLATE-23 |
| B017456 | PLATE-5 | B042802 | PLATE-40 | B073882GY | PLATE-23 |
| B017746 | PLATE-6 | B042895 | PLATE-40 | B073882NB | PLATE-23 |
| B017746 | PLATE-6 | B073320R | PLATE-39 | B074024 | PLATE-25 |
| B018442 | PLATE-16 | B073441 | PLATE-15 | B074033 | PLATE-40 |
| B018464 | PLATE-12 | B073469 | PLATE-34 | B074060 | PLATE-25 |
| B018464 | PLATE-13 | B073478R | PLATE-37 | B074063 | PLATE-23 |
| B018533 | PLATE-7 | B073479R | PLATE-37 | B074150 | PLATE-20 |
| B018718 | PLATE-6 | B073481R | PLATE-37 | B074261 | PLATE-26 |
| B018853 | PLATE-9 | B073490 | PLATE-40 | B074262 | PLATE-26 |
| B018853 | PLATE-13 | B073492 | PLATE-40 | B074275 | PLATE-26 |
| B018854 | PLATE-5 | B073600 | PLATE-41 | B074491 | PLATE-40 |
| B018946 | PLATE-6 | B073601 | PLATE-22 | B074568 | PLATE-37 |
| B019047 | PLATE-11 | B073602BL | PLATE-22 | B074593 | PLATE-24 |
| B019220 | PLATE-13 | B073602BW | PLATE-22 | B074637 | PLATE-20 |
| B023726R | PLATE-40 | B073602CB | PLATE-22 | B074905 | PLATE-40 |
| B023727R | PLATE-40 | B073602ED | PLATE-22 | B074970 | PLATE-15 |
| B023786R | PLATE-35 | B073602EG | PLATE-22 | B074971 | PLATE-15 |
| B023940 | PLATE-31 | B073602GY | PLATE-22 | B074999 | PLATE-35 |
| B024113 | PLATE-29 | B073602NB | PLATE-22 | B074999 | PLATE-36 |
| B024113 | PLATE-32 | B073602WR | PLATE-22 | B075267 | PLATE-25 |
| B024168 | PLATE-24 | B073626 | PLATE-22 | B075336 | PLATE-24 |
| B024373 | PLATE-30 | B073665 | PLATE-22 | B075459 | PLATE-19 |
| B024373 | PLATE-30 | B073666 | PLATE-22 | B075475 | PLATE-36 |
| B024474 | PLATE-20 | B073667SP | PLATE-29 | B075485 | PLATE-35 |
| B024474 | PLATE-22 | B073682 | PLATE-41 | B075488 | PLATE-35 |
| B024532 | PLATE-26 | B073685 | PLATE-41 | B075489 | PLATE-35 |
| B024614 | PLATE-31 | B073690 | PLATE-29 | B075490 | PLATE-35 |
| B041054 | PLATE-23 | B073715 | PLATE-37 | B075491 | PLATE-35 |
| B041118 | PLATE-21 | B073788 | PLATE-35 | B075495 | PLATE-36 |
| B041217 | PLATE-21 | B073800 | PLATE-36 | B075505ED | PLATE-21 |
| B041392 | PLATE-20 | B073810 | PLATE-26 | B075531ED | PLATE-21 |
| B041397 | PLATE-23 | B073812 | PLATE-26 | B075565 | PLATE-34 |
| B041398 | PLATE-23 | B073813 | PLATE-26 | B075566 | PLATE-34 |
| B041774 | PLATE-34 | B073814 | PLATE-26 | B075593 | PLATE-17 |
| B041787 | PLATE-25 | B073848 | PLATE-28 | B075595 | PLATE-19 |
| B041853 | PLATE-24 | B073849 | PLATE-28 | B075687ED | PLATE-28 |

| | | |
|---|---|---|
| | | |

**110**