Parts Catalog

Commercial Vehicle

APE CITY NXT PLUS PTL CNG LPG BSVI

PIAGGIO VEHICLES PRIVATE LIMITED
Registered Office: Bund Garden Road ,Opp. Residency Club , Pune (India)

Print Date: 05-Oct-2022

PLATES INDEX

Sr No.	Plate Name	Plate No.	Page No.
1	Engine Assembly	1	1-2
2	COUPLED CRANKCASE	2	3-6
3	CRANKSHAFT	3	7-8
4	Cylinder Piston Group	4	9-10
5	CYLINDER HEAD UNIT - VALVE	5	11-12
6	ROCKER LEVERS SUPPORT UNIT	6	13-14
7	CYLINDER HEAD COVER	7	15-16
8	OIL PUMP	8	17-18
9	STARTER - ELECTRIC STARTER	9	19-20
10	FLYWHEEL_A.C GENERATOR ASSY.	10	21-22
11	FAN COVER & SHROUD ASSY.	11	23-24
12	GEAR-BOX COMPONENTS & GEAR SHIFTER	12	25-26
13	CLUTCH ASSY & CLUTCH COVER	13	27-30
14	DIFFERENTIAL	14	31-32
15	THROTTLE BODY - INJECTOR - INDUCTION JOINT - PETROL	15	33-34
16	FUEL INJECTION SYSTEM - CARBURETOR - GAS	16	35-36
17	CARBURETOR CHILD PARTS	17	37-38
18	SILENCER	18	39-40
19	COMPLETE H.T. COIL	19	41-42
20	AIR FILTER	20	43-44
21	MAIN FRAME/BATTERY BKT/JACK BKT	21	45-48
22	PASS. BODY WITH DOORS &HOOD FRAME & SOFT TOP	22	49-54
23	ENGINE MOUNTING	23	55-56
24	WINDSHIELD, GLASS ,PACKING & MIRROR	24	57-58
25	MUDGUARD	25	59-60
26	FUEL TANK & FUEL LINE_PETROL	26	61-64
27	FUEL TANK/FILTER/FUEL PIPES - GAS	27	65-66
28	CAB COMPONENTS_CARPETS & TOOL KIT	28	67-68
29	DASHBOARD ASSLY COMPLETE & LOCK SET	29	69-70
30	HEAD LAMP & BEZEL ASSY, LOGO & SUPPORT	30	71-72

Print Date: 05-Oct-2022

PLATES INDEX

Sr No.	Plate Name	Plate No.	Page No.
31	HANDLEBARS	31	73-74
32	FORK/STEERING TUBE - STEERING BEARING UNIT	32	75-78
33	REAR SUSPENSION - SHOCK ABSORBER/S & ENGINE SUPPORT	33	79-82
34	DRIVE SHAFT & BELLOW	34	83-84
35	BRAKE ASSEMBLY FRONT & REAR	35	85-86
36	CABLES	36	87-88
37	TMC & BRAKING SYSTEM & TUBES	37	89-90
38	CONTROL PEDALS - LEVERS	38	91-92
39	SELECTORS - SWITCHES - BUTTONS	39	93-94
40	TAIL LAMP ASSY	40	95-96
41	MAIN CABLE HARNESS	41	97-98
42	ELECTRICAL DEVICES	42	99-104
43	WINDSCREEN WIPER	43	105-106
44	STICKERS	44	107-108
45	LPG KIT	45	109-112
46	CNG KIT- Applicable For Rear Side Regulator mtg.(Long Member)	46	113-116

Print Date: 05-Oct-2022

PICTORIAL PLATES INDEX

PLATE-1 **Engine Assembly**

Page No. :1-2

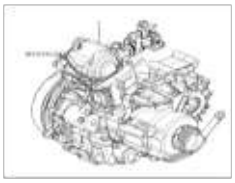

PLATE-2 **COUPLED CRANKCASE**

Page No. :3-6

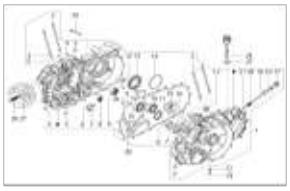

PLATE-3 **CRANKSHAFT**

Page No. :7-8

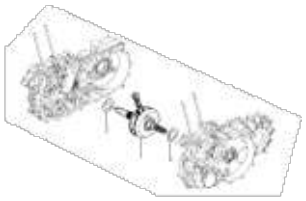

PLATE-4 **Cylinder Piston Group**

Page No. :9-10

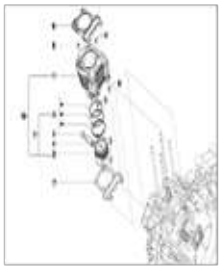

PLATE-5 **CYLINDER HEAD UNIT - VALVE**

Page No. :11-12

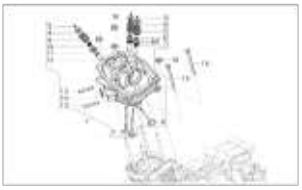

PLATE-6 **ROCKER LEVERS SUPPORT UNIT**

Page No. :13-14

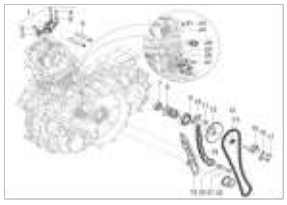

PLATE-7 **CYLINDER HEAD COVER**

Page No. :15-16

PLATE-8 **OIL PUMP**

Page No. :17-18

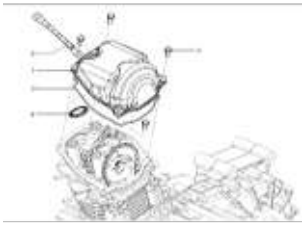

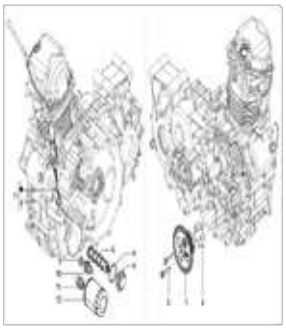

Print Date: 05-Oct-2022

PICTORIAL PLATES INDEX

PLATE-9 **STARTER - ELECTRIC STARTER**

Page No. :19-20

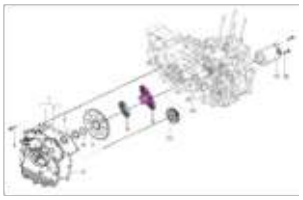

PLATE-10 **FLYWHEEL_A.C GENERATOR ASSY.**

Page No. :21-22

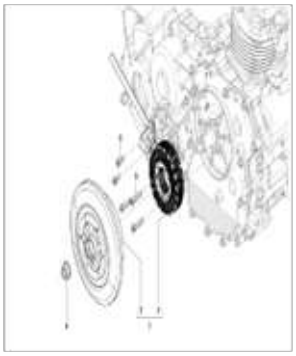

PLATE-11 **FAN COVER & SHROUD ASSY.**

Page No. :23-24

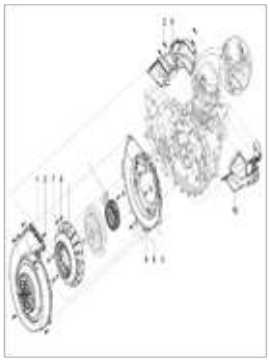

PLATE-12 **GEAR-BOX COMPONENTS & GEAR SHIFTER**

Page No. :25-26

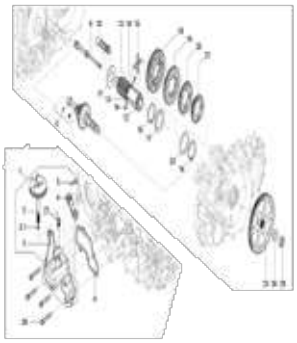

PLATE-13 **CLUTCH ASSY & CLUTCH COVER**

Page No. :27-30

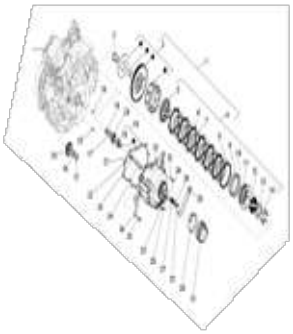

PLATE-14 **DIFFERENTIAL**

Page No. :31-32

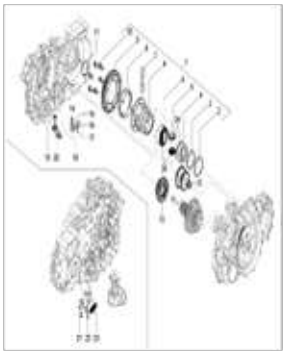

PLATE-15 **THROTTLE BODY - INJECTOR - INDUCTION JOINT - PETROL**

Page No. :33-34

PLATE-16 **FUEL INJECTION SYSTEM - CARBURETOR - GAS**

Page No. :35-36

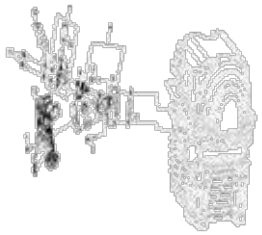

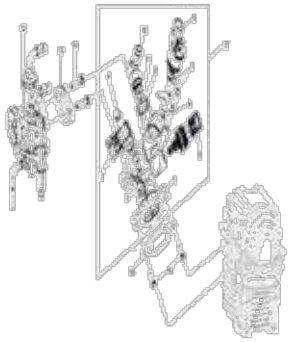

Print Date: 05-Oct-2022

PICTORIAL PLATES INDEX

PLATE-17 CARBURETOR CHILD PARTS

Page No. :37-38

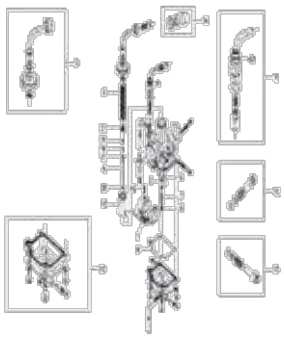

PLATE-18 SILENCER

Page No. :39-40

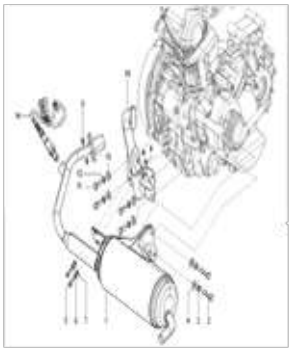

PLATE-19 COMPLETE H.T. COIL

Page No. :41-42

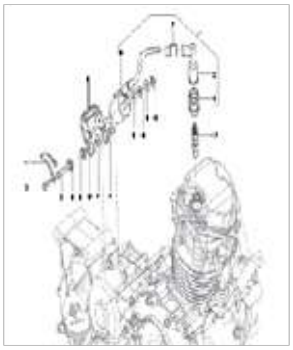

PLATE-20 AIR FILTER

Page No. :43-44

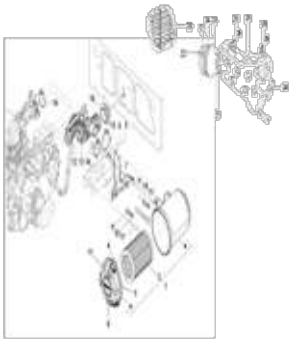

PLATE-21 MAIN FRAME/BATTERY BKT/JACK BKT

Page No. :45-48

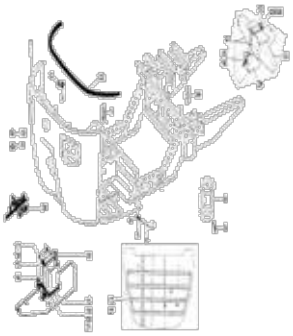

PLATE-22 PASS. BODY WITH DOORS &HOOD FRAME & SOFT TOP

Page No. :49-54

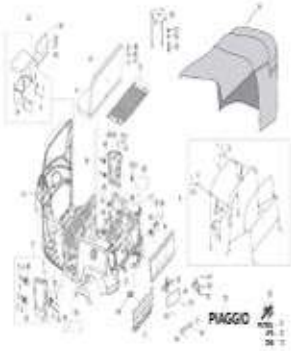

PLATE-23 ENGINE MOUNTING

Page No. :55-56

PLATE-24 WINDSHIELD, GLASS ,PACKING & MIRROR

Page No. :57-58

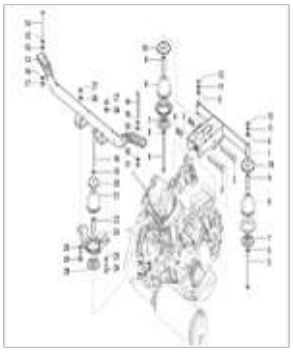

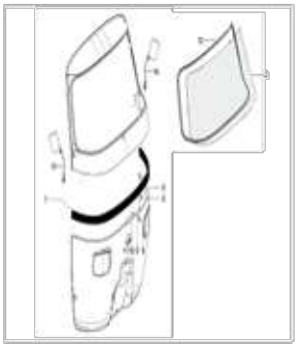

Print Date: 05-Oct-2022

PICTORIAL PLATES INDEX

PLATE-25 MUDGUARD

Page No. :59-60

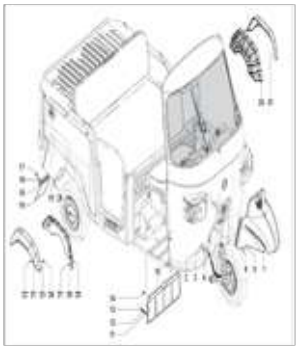

PLATE-26 FUEL TANK & FUEL LINE_PETROL

Page No. :61-64

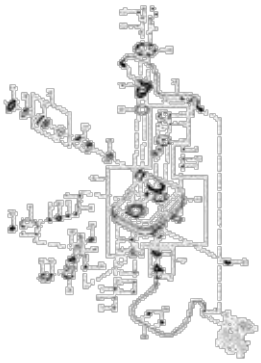

PLATE-27 FUEL TANK/FILTER/FUEL PIPES - GAS

Page No. :65-66

PLATE-28 CAB COMPONENTS_CARPETS & TOOL KIT

Page No. :67-68

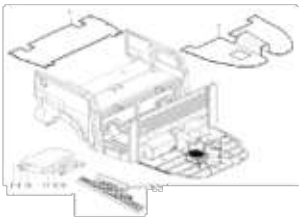

PLATE-29 DASHBOARD ASSLY COMPLETE & LOCK SET

Page No. :69-70

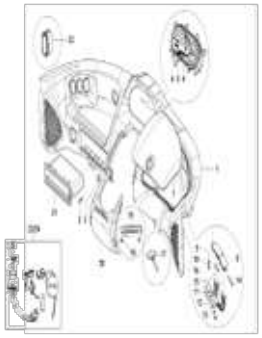

PLATE-30 HEAD LAMP & BEZEL ASSY, LOGO & SUPPORT

Page No. :71-72

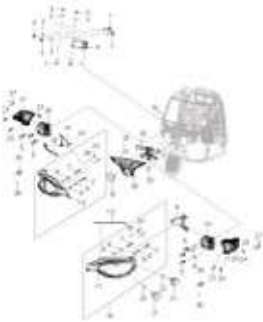

PLATE-31 HANDLEBARS

Page No. :73-74

PLATE-32 FORK/STEERING TUBE - STEERING BEARING UNIT

Page No. :75-78

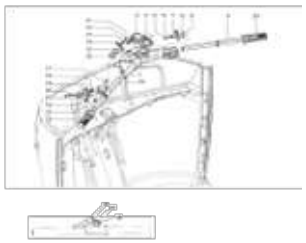

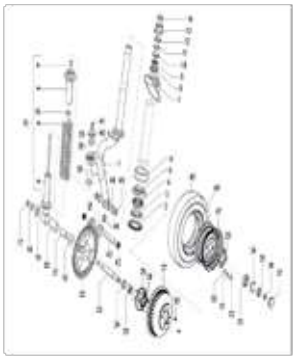

Print Date: 05-Oct-2022

PICTORIAL PLATES INDEX

PLATE-33 **REAR SUSPENSION - SHOCK ABSORBER/S & ENGINE SUPPORT**

Page No. :79-82

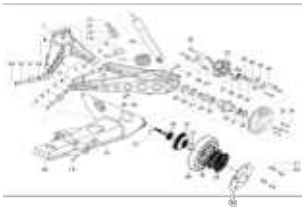

PLATE-34 **DRIVE SHAFT & BELLOW**

Page No. :83-84

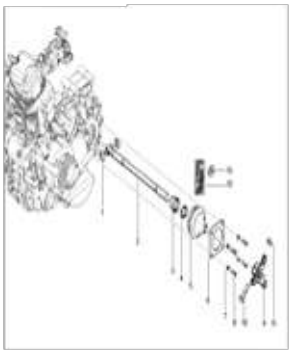

PLATE-35 **BRAKE ASSEMBLY FRONT & REAR**

Page No. :85-86

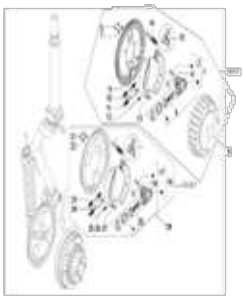

PLATE-36 **CABLES**

Page No. :87-88

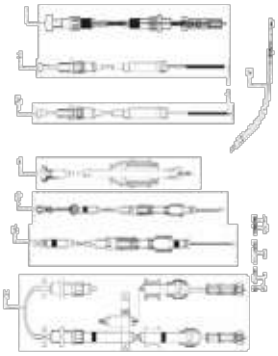

PLATE-37 **TMC & BRAKING SYSTEM & TUBES**

Page No. :89-90

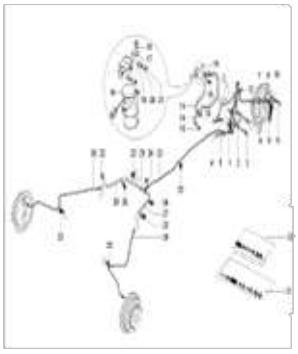

PLATE-38 **CONTROL PEDALS - LEVERS**

Page No. :91-92

PLATE-39 **SELECTORS - SWITCHES - BUTTONS**

Page No. :93-94

PLATE-40 **TAIL LAMP ASSY**

Page No. :95-96

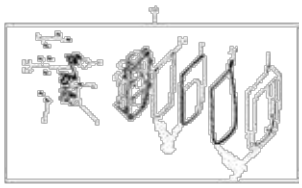

Print Date: 05-Oct-2022

PICTORIAL PLATES INDEX

PLATE-41 MAIN CABLE HARNESS

Page No. :97-98

PLATE-42 ELECTRICAL DEVICES

Page No. :99-104

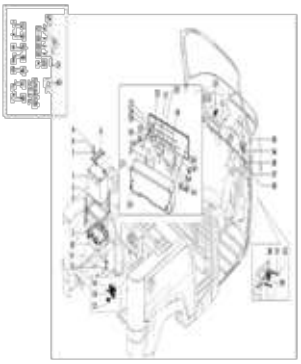

PLATE-43 WINDSCREEN WIPER

Page No. :105-106

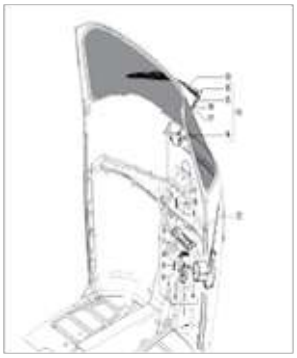

PLATE-44 STICKERS

Page No. :107-108

PLATE-45 LPG KIT

Page No. :109-112

PLATE-46 CNG KIT- Applicable For Rear Side Regulator mtg.(Long Member)

Page No. :113-116

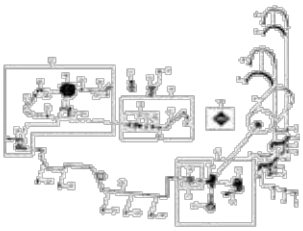

Print Date: 05-Oct-2022

PLATE-1

Engine Assembly

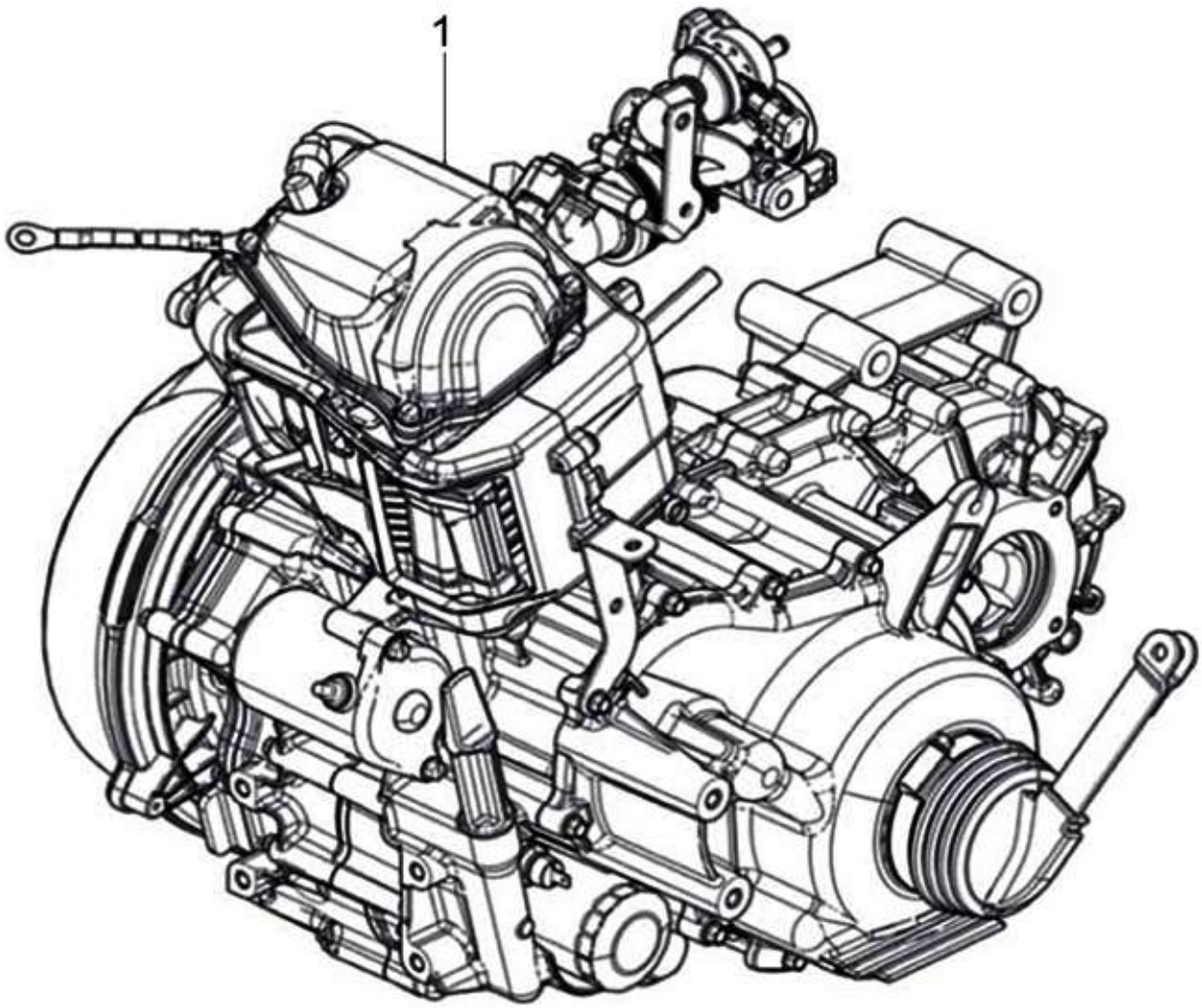
1

1

Print Date: 05-Oct-2022

PLATE-1

Engine Assembly

Fig. No.	Part No.	Description	Qty	Remarks
1	CM294025	ENG. 230 4S/3V E4 APE PAX PETROL	1	PTL
1	CM293934	ENG. 230 4S/3V BSVI APÃ? PAX LPG	1	LPG
1	CM293935	ENG. 230 4S/3V BSVI APÃ? PAX CNG	1	CNG
1	CM293919	ENG. 230 4S/3V BSVI APÃ? PAX LPG 1 LPG	1	Mono Fuel (LPG)

2

Print Date: 05-Oct-2022

PLATE-2
COUPLED CRANKCASE

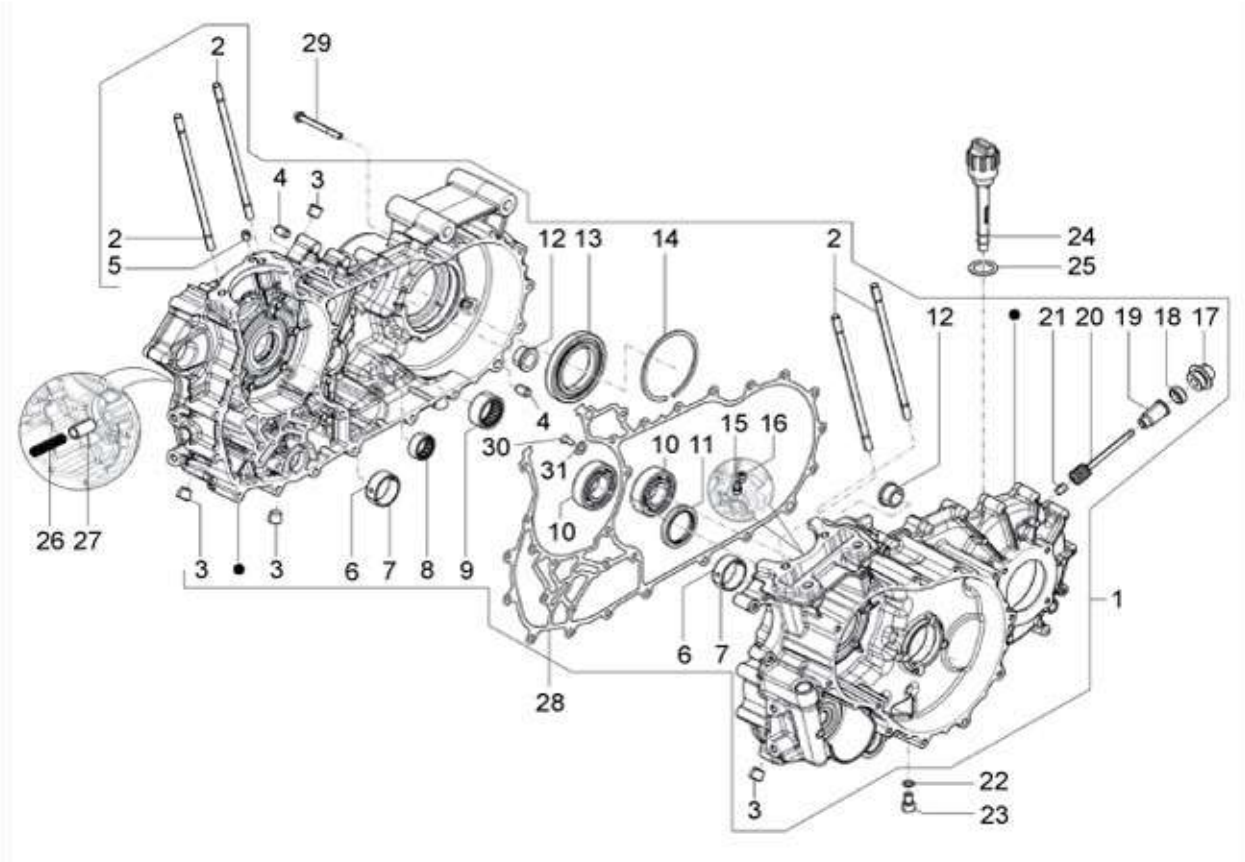
2
29
4
3
2
5
12 13
14
2
24
25
12
21 20 19 18 17
4
30
31
10 11
15 16
10
26 27
3
3
6 7 8 9
1
6 7
28
22
23
3

3

Print Date: 05-Oct-2022

PLATE-2
COUPLED CRANKCASE

Fig. No.	Part No.	Description	Qty	Remarks
1	SP1A007046	COMPLETE CRANKCASE- SPD	1	
2	B014755	STUD SCREW	4	
3	1A011246	TAPER THREAD PLUG	4	
4	B015592	REFERENCE DOWEL (D.9,5 H=15)	2	
5	1A007774	DOWEL	1	
6	1A007663R	CRANKSHAFT STUB UPPER HALF BEARING	1	Service on colorwise set KIT95007R/7Y/7B
7	1A007664R	CRANKSHAFT STUB LOWER HALF BEARING	1	Service on colorwise set KIT95007R/7Y/7B
8	884222808	NEEDLE BUSH 22X28X12	1	
9	1A007028	ROLLER BEARING	1	
10	1A007026	BALL BEARING	2	
11	1A002685	SEAL RING 35X47X6	1	
12	B042486	BUSH	2	
13	7066R	RADIAL BALL BEARING	1	
14	111353	CIRCLIP	1	
15	1A008823	PISTON COOLING JET	1	
16	1A000612	RETAINER SCREW - PRE COATED	1	
17	1A008559	BUSH (SPEEDOMETER GEAR)	1	
18	117402	OIL SEAL	1	
19	117401	BUSH	1	
20	1A010720	SPEEDOMETER GEAR	1	
21	165121014	PIN	1	
22	485703	WASHER	1	
23	269755	SOCKET HEAD SCREW (M8X12)	1	
24	112898	OIL LEVEL ARM WITH PLUG	1	
25	127016015	DIPSTICK SEALING WASHER	1	
26	485655	SPRING FOR OIL PRESSURE VALVE	1	
27	829661	OIL PRES.VALVE	1	
28	1A006856	HALF-CRANKCASES GASKET	1	
29	432142	HEXAGONAL RANGE HEAD SCREW (M6X35)	30	
30	1A016964	CSK PHILIPS HEAD SCREW	1	
31	1A011217	WASHER	1	
32	KIT95007R	CRANKSHAFT BEARING SET_RED COLOUR	1	Red color bearing set(consist Of sr no 6,7)
33	KIT95007Y	CRANKSHAFT BEARING SET_YELLOW COLOUR	1	Yellow color bearing set(consist Of sr no 6,7)
34	KIT95007B	CRANKSHAFT BEARING SET_BLUE COLOUR	1	Blue color bearing set(consist Of sr no 6,7)
35	KIT96028R	ENGINE GASKET SET APECITY BS3/4 STEP-2	1	NI

4

Print Date: 05-Oct-2022

PLATE-2
COUPLED CRANKCASE

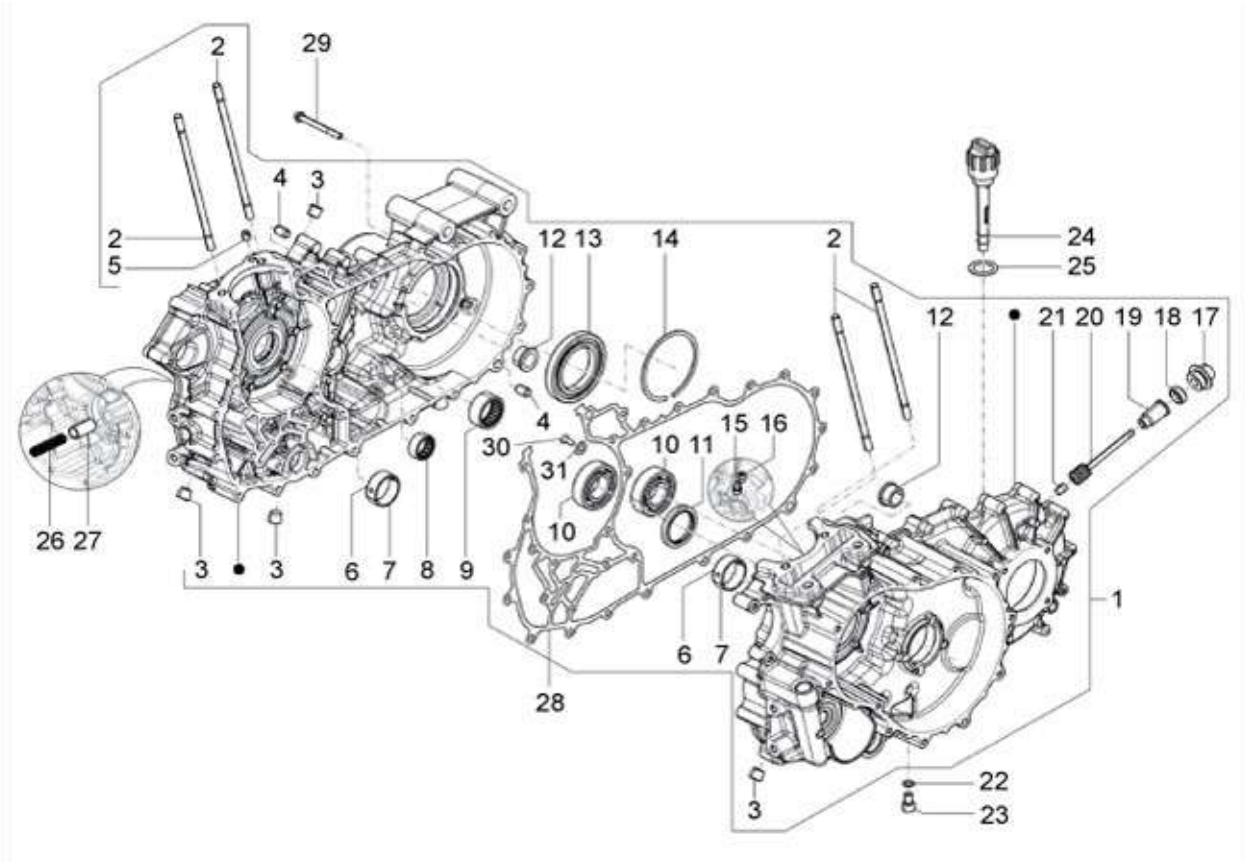
2
29
4
3
2
5
12 13
14
2
24
25
12
21 20 19 18 17
4
30
31
10 11
15 16
10
26 27
3
3
6 7 8 9
1
6 7
28
22
23
3

5

Print Date: 05-Oct-2022

PLATE-2
COUPLED CRANKCASE

Fig. No.	Part No.	Description	Qty	Remarks
36	KIT95105R	ENG.OIL SEAL SET APECITY-STEP-2 AND 230CC AF	1	NI

6

Print Date: 05-Oct-2022

PLATE-3
CRANKSHAFT

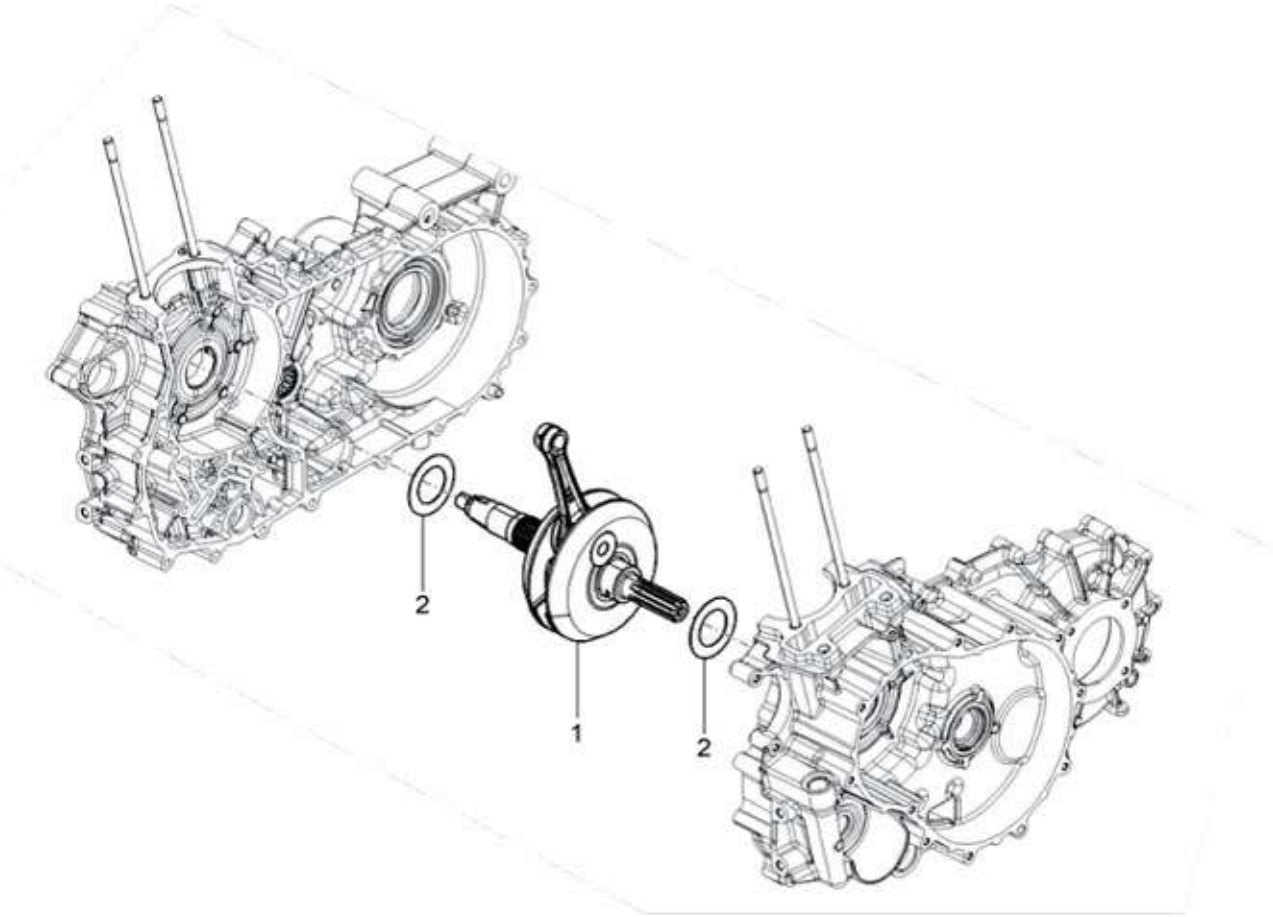
2
1
2

7

Print Date: 05-Oct-2022

PLATE-3
CRANKSHAFT

Fig. No.	Part No.	Description	Qty	Remarks
1	1A011066	CRANKSHAFT ASSEMBLY	1	
2	B016144	WASHER	2	

8

Print Date: 05-Oct-2022

PLATE-4

Cylinder Piston Group

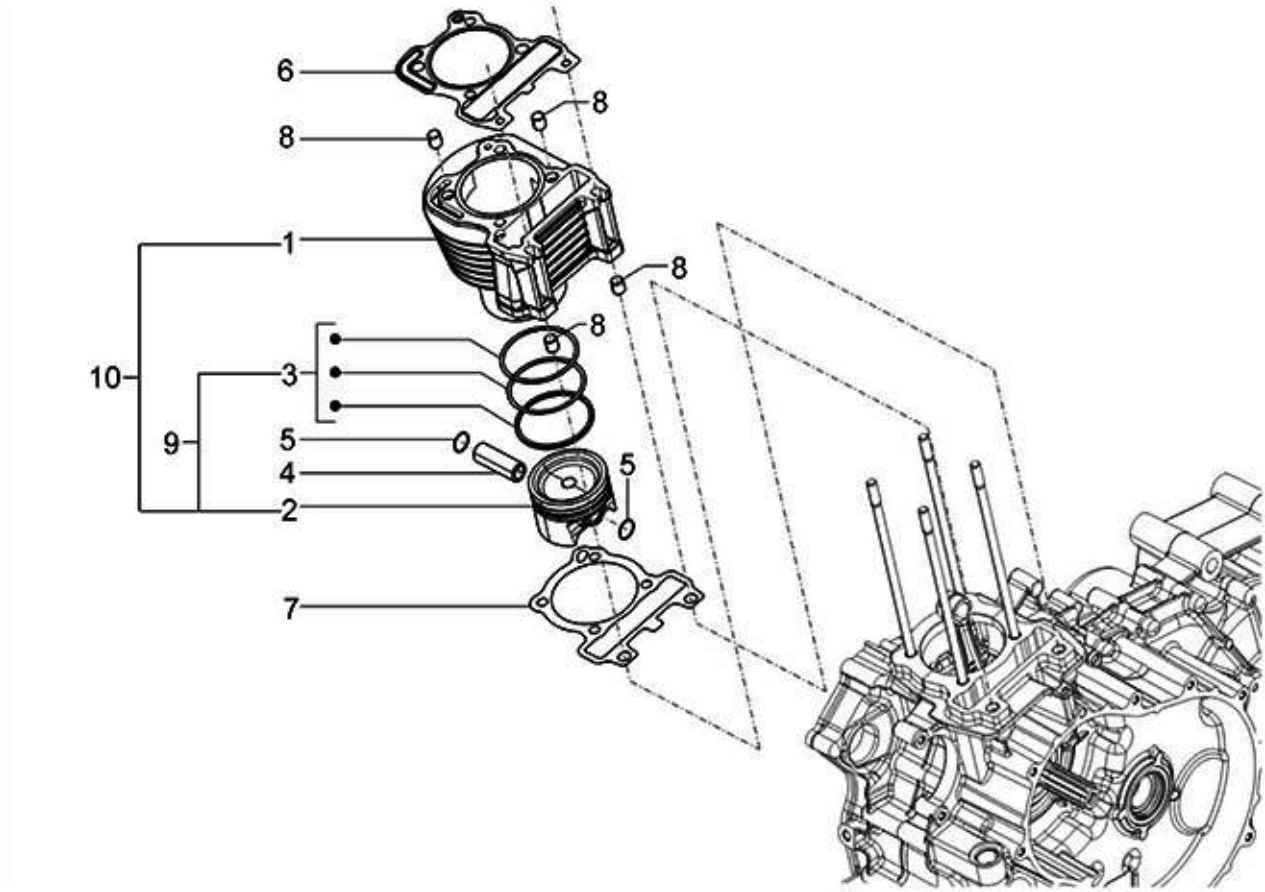
6
8
8
1
8
8
10
3
9
5
4
2
5
7

9

Print Date: 05-Oct-2022

PLATE-4

Cylinder Piston Group

Fig. No.	Part No.	Description	Qty	Remarks
1	SP1A005855	CYLINDER APE PAX SPD	1	PTL/CNG-Service on BP KIT
1	SP1A017607	CYLINDER APE PAX BS6 SPD	1	PTL/CNG-Service on BP KIT
2	1A017605	PISTON DIA62.6	1	CNG/LPG
2	1A018094	PISTON DIA62.6	1	PTL
3	1A009621R	PISTON RING GROUP	1	
4	482335	PISTON PIN	1	
5	963486	CIRCLIP FOR PISTON WRIST	2	
6	B014555	HEAD CYLINDER GASKET	1	
7	CM284002	CRANKCASE/CYLINDER GASKET (0.6)	1	
7	CM284003	CRANKCASE/CYLINDER GASKET (0.8)	1	
7	CM284001	CRANKCASE/CYLINDER GASKET (0.4)	1	
8	435571	REFERENCE DOWEL	4	
9	KIT96053R	PISTON ASSY.APE CITYPLUS AND AUTO DX230_C/L_BS6	1	CNG/LPG-Service under BP Kit
9	KIT96055R	PISTON ASSY.APE CITY AND APE CITYPLUS_ (PTL BS6)	1	NS- Service under BP Kit
10	KIT96052R	B.P KIT 230 CC BSVI GAS	1	CNG
10	KIT96056R	BP KIT APE CITY BS6 LPG	1	LPG
10	KIT96054R	BP KIT APE CITY AND APE CITYPLUS_(PTL BS6)	1	PTL

10

Print Date: 05-Oct-2022

PLATE-5

CYLINDER HEAD UNIT - VALVE

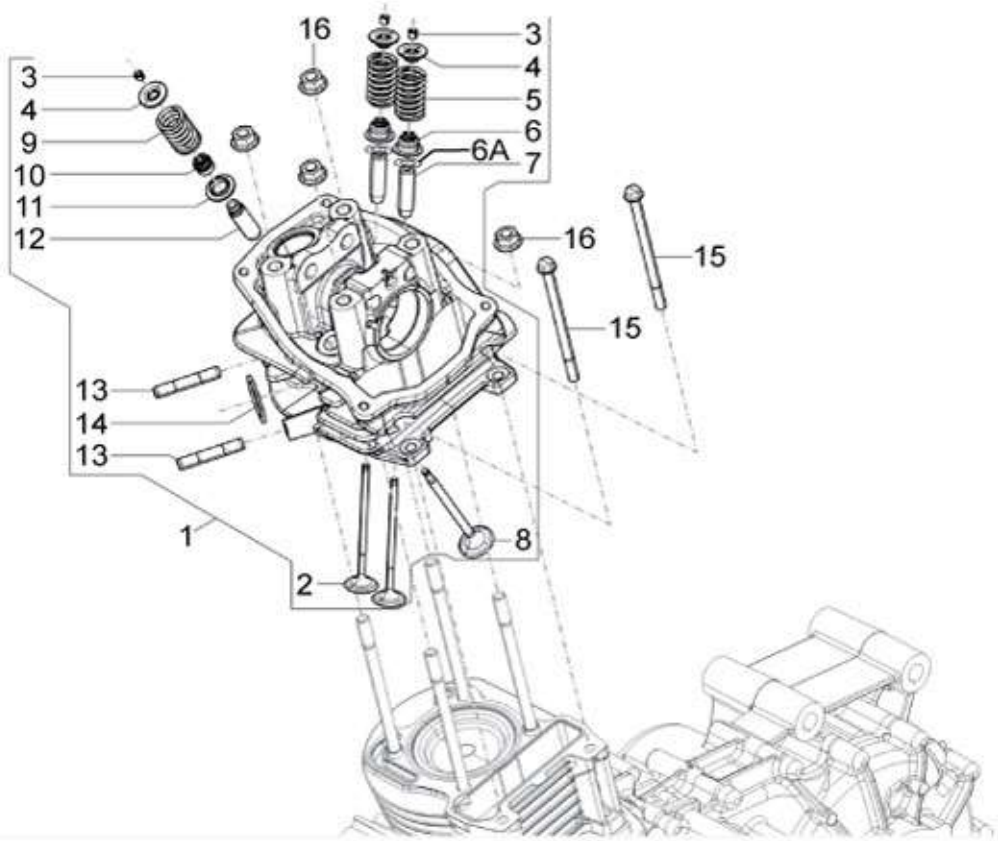
16
3
4
5
6
6A
7
3
4
9
10
11
12
16
15
15
13
14
13
1
8
2

11

Print Date: 05-Oct-2022

PLATE-5

CYLINDER HEAD UNIT - VALVE

Fig. No.	Part No.	Description	Qty	Remarks
1	SP1A017573	CYLINDER HEAD ASSY_SPD	1	LPG/PTL/CNG
1	SP1A012956	CYLINDER HEAD ASSY APEPAX EUR- SPD	1	
1A	NS	NOT SERVICEABLE	1	NI
2	B014684	INTAKE VALVE Ø20	2	
3	B015288	HALF-CONE	6	
4	B017456	UPPER CUP	3	
5	B014706	VALVE SPRING (INTAKE)	1	
6	843307	VALVE SEAL RING	2	
6A	1A012925	SLIDING WASHER	2	
7	NS	NOT SERVICEABLE	2	
8	B017438	EXHAUST VALVE Ø22	1	
9	B014705	VALVE SPRING (EXHAUST)	1	
10	83054R	VALVE SEAL RING	1	
11	483711	LOWER CUP	1	
12	NS	NOT SERVICEABLE	1	
13	B016368	SPECIAL STUD	2	
14	434716	CYLINDER HEAD/MUFFLER GASKET	1	
15	B018854	HEXAGONAL HEAD FLANGED SCREW M6X90	2	
16	B016939	FLANGED NUT M8X1.25	4	
17	KIT1U000020	SET OF VALVES	1	NI (Consists Of Sr.NO.-2&8)
18	KIT95011R	VALVE SEAL RING SET	1	NI (Consists Of Sr.NO.-10&16)

12

Print Date: 05-Oct-2022

PLATE-6

ROCKER LEVERS SUPPORT UNIT

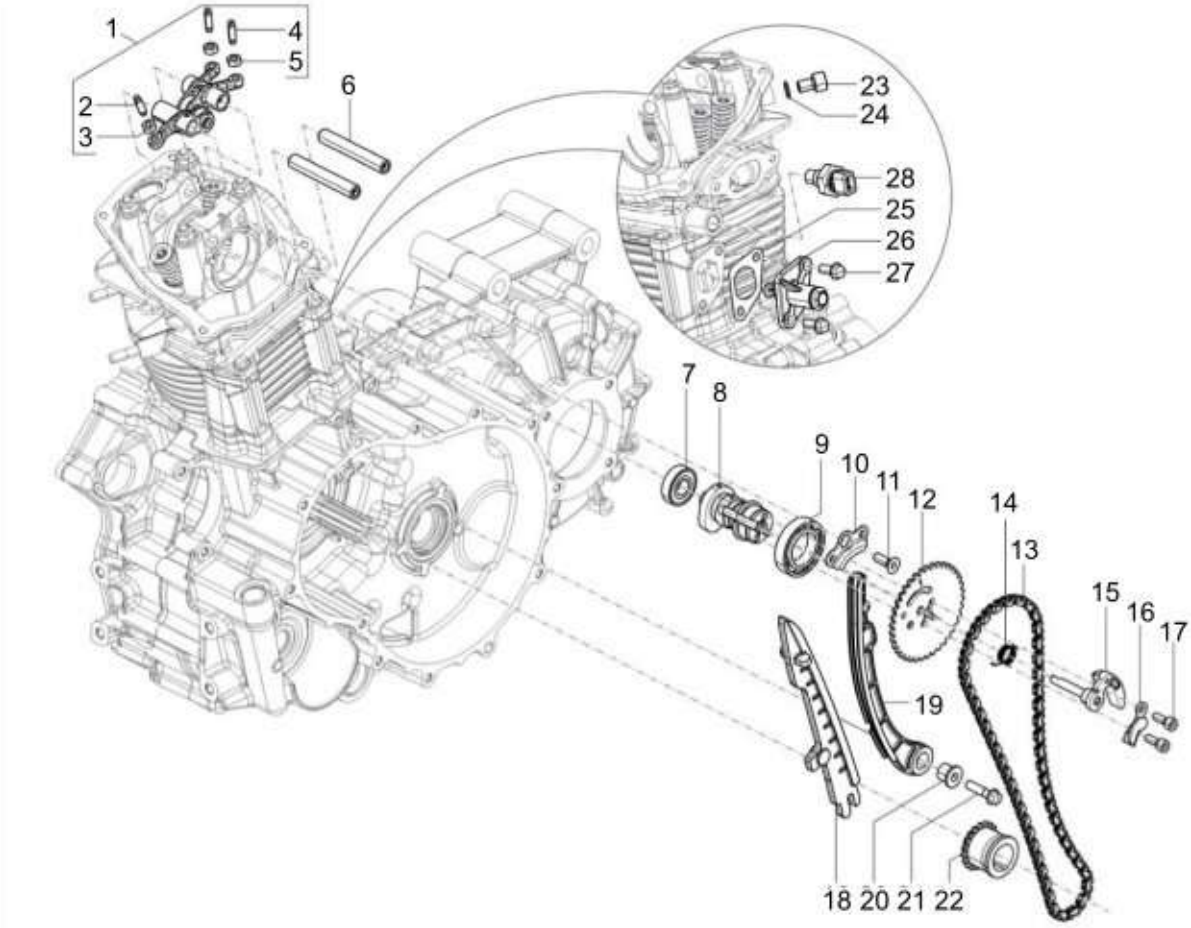
1
2
3
4
5
6
7
8
9
10
11
12
13
14
15
16
17
18
19
20
21
22
23
24
25
26
27
28

13

Print Date: 05-Oct-2022

PLATE-6

ROCKER LEVERS SUPPORT UNIT

Fig. No.	Part No.	Description	Qty	Remarks
1	1A013013	ROCKER ARM GROUP	1	
2	B017323	VALVE ADJUSTMENT SCREW	1	
3	B017431	ROCKER ARM NUT	1	
4	B017323	VALVE ADJUSTMENT SCREW	2	
5	B017431	ROCKER ARM NUT	2	
6	B017113	ROCKER ARM SHAFT	2	
7	83040R	DEEP GROOVE BALL BEARING	1	
8	B017746	CAMSHAFT WITH I.P.	1	
9	83041R	DEEP GROOVE BALL BEARING	1	
10	B014760	CAMSHAFT CONTAINMENT SHEET-STEEL	1	
11	B018946	COUNTERSUNK SCREW M6X18	1	
12	1A002358	TIMING CROWN	1	
13	1A015692	TIMING CHAIN SOUNDLESS TYPE	1	
14	B015483	DECOMPRESSION SPRING	1	
15	SP1A006405	CENTRIFUGAL MASS WITH I.P.	1	
16	1A008397	CENTRIFUGAL MASS CONTAINMENT SHEET	1	
17	B018718	EXAG. SOCKET CYLIND.HEAD SCREW M5X14	2	
18	1A006899	FIXED PAD	1	
19	1A006901	CHAIN TIGHTENING ROD	1	
20	485868	SPACER FOR CHAIN TIGHTNING ROD	1	
21	B016774	FLANGED HEXAGONAL SCREW M6X25	1	
22	1A007565	TIMING PINION	1	
23	269755	SOCKET HEAD SCREW (M8X12)	1	
24	485703	WASHER	1	
25	847928	CHAIN SUPPORT GASKET	1	
26	B017165	CHAIN TENSIONER DEVICE	1	
27	434541	SCREW	2	
28	58273R	THERMIC SENSOR	1	

14

Print Date: 05-Oct-2022

PLATE-7
CYLINDER HEAD COVER

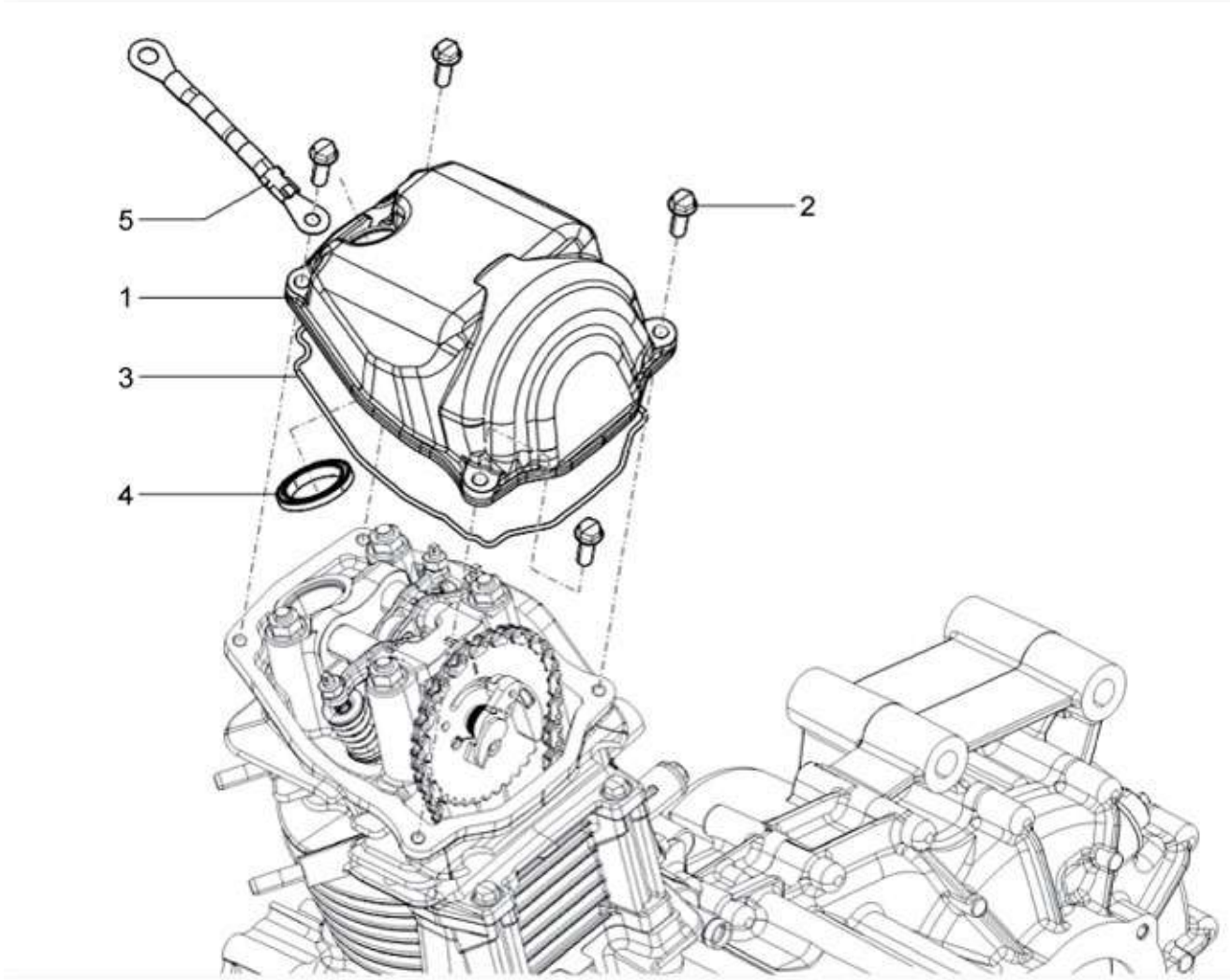
5
1
3
4
2

15

Print Date: 05-Oct-2022

PLATE-7
CYLINDER HEAD COVER

Fig. No.	Part No.	Description	Qty	Remarks
1	1A006545	HEAD COVER	1	
2	018639	SCREW M6X20	4	
3	B018533	CYLINDER HEAD COVER GASKET	1	
4	B014732	SPARK PLUG HOLE GASKET	1	
5	1D001894	GROUND WIRE	1	

16

Print Date: 05-Oct-2022

PLATE-8
OIL PUMP

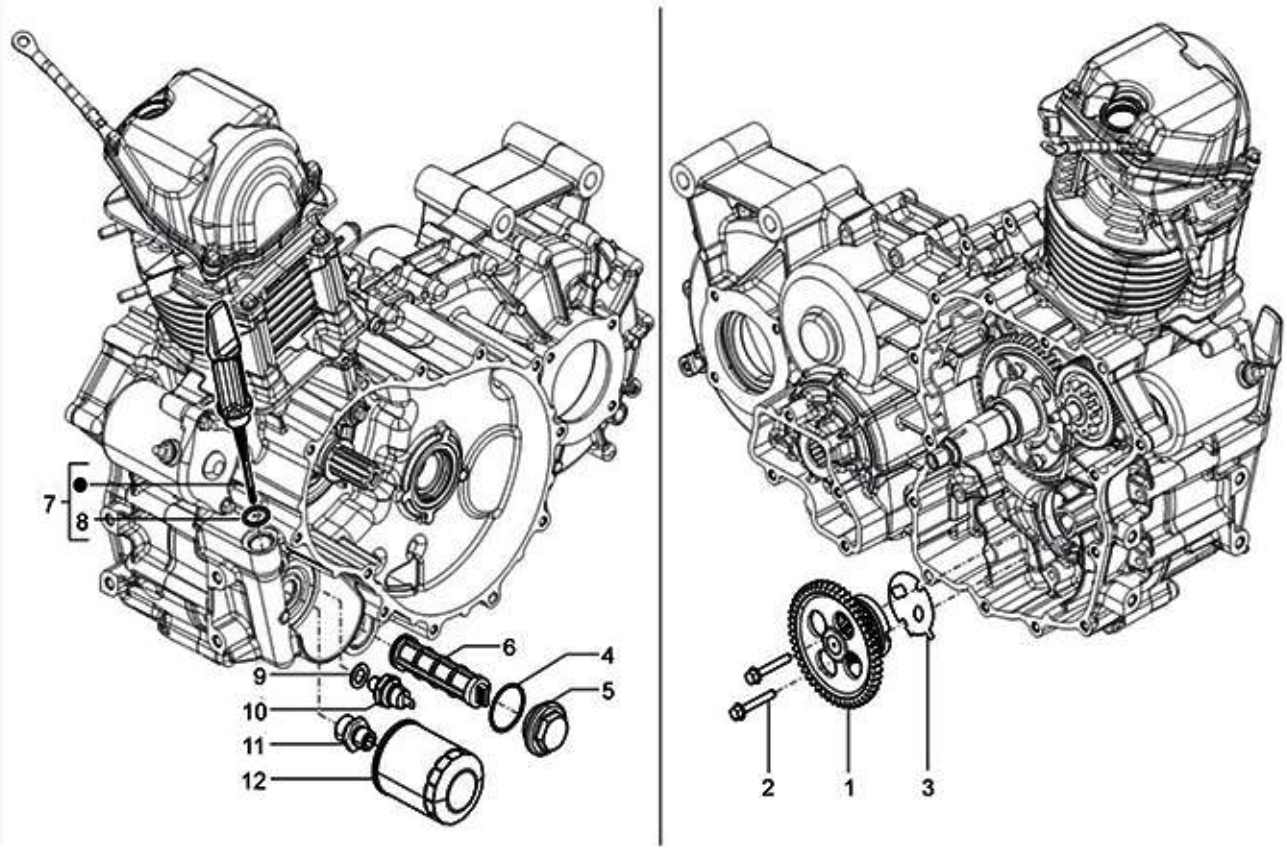
7
8
9
10
11
12
6
4
5
2
1
3

17

Print Date: 05-Oct-2022

PLATE-8
OIL PUMP

Fig. No.	Part No.	Description	Qty	Remarks
1	1A006877	OIL PUMP ASSY	1	
2	1A016737	FLANGED HEXAGONAL HEAD SCREW	2	
3	B015943	CRANKCASE/ OIL PUMP GASKET	1	
4	285536	O-RING GASKET 31.47X1.78	1	
5	B015598	OIL FILTER PLUG	1	
6	1A006812	COMPLETE INTAKE OIL FILTER	1	
7	1A007047	OIL DIPSTICK COMPLETE	1	
8	479986	O-RING GASKET	1	
9	1A011500	WASHER	1	
10	1D001138	MINIMUM PRESSURE OIL SWITCH	1	
11	1A009762	OIL FILTER SCREW	1	
12	1A022934R	NEW OIL FILTER	1	

18

Print Date: 05-Oct-2022

PLATE-9

STARTER - ELECTRIC STARTER

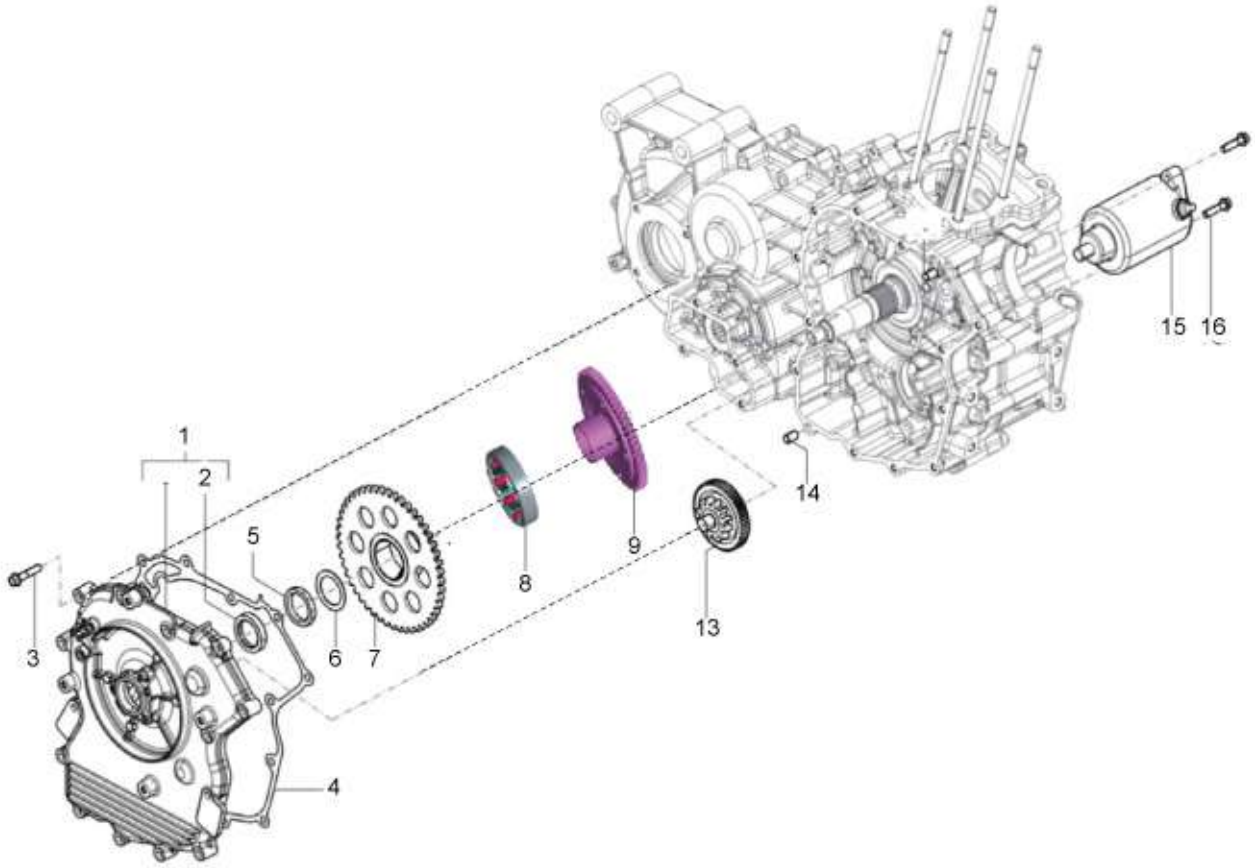
1
2
3
4
5
6
7
8
9
13
14
15
16

19

Print Date: 05-Oct-2022

PLATE-9

STARTER - ELECTRIC STARTER

Fig. No.	Part No.	Description	Qty	Remarks
1	SP1A007045	STARTER COVER WITH I.P.	1	
2	B016120	SEAL RING 25X35X7	1	
3	B018853	FLANGED HEXAGONAL HEAD SCREW M6X30	14	
4	1A006858	STARTER COVER GASKET	1	
5	1A021204	RING NUT	1	
6	B016148	WASHER	1	
7	1A018038	CROWN ELECTRIC STARTER WITH I.P.	1	
8	1A020456	ONE WAY CLUTCH ASSY	1	
9	1A018212	CUM CLUTCH HUB	1	
10	1A009592	O-RING KIT	1	NI
11	1A009593	THRUST WASHER KIT	1	NI
12	SP41A020456	ONE WAY CLUTCH HUB ASSY - 230CC SPD	1	Consists of Part 7 8 and 9
13	B017189	ELECTRIC STARTER INTERMED GEAR WITH P.I.	1	
14	1A000708	DOWEL (Ø7,5, H=12)	2	
15	1A018642R	ELECTRIC STARTER MOTOR	1	
16	B016774	FLANGED HEXAGONAL SCREW M6X25	2	
17	1A009591	HEXAG. HEAD SCREW	1	NI
18	1A009586	REAR BRACKET ASSY	1	NI
19	1A009587	BRUSH ASSLY KIT (+VE & -VE)	1	NI
20	1A009588	ARMATURE ASSLY	1	NI
21	1A009589	YOKE ASSLY	1	NI
22	1A009590	FRONT BRACKET ASSLY	1	NI

20

Print Date: 05-Oct-2022

PLATE-10

FLYWHEEL_A.C GENERATOR ASSY.

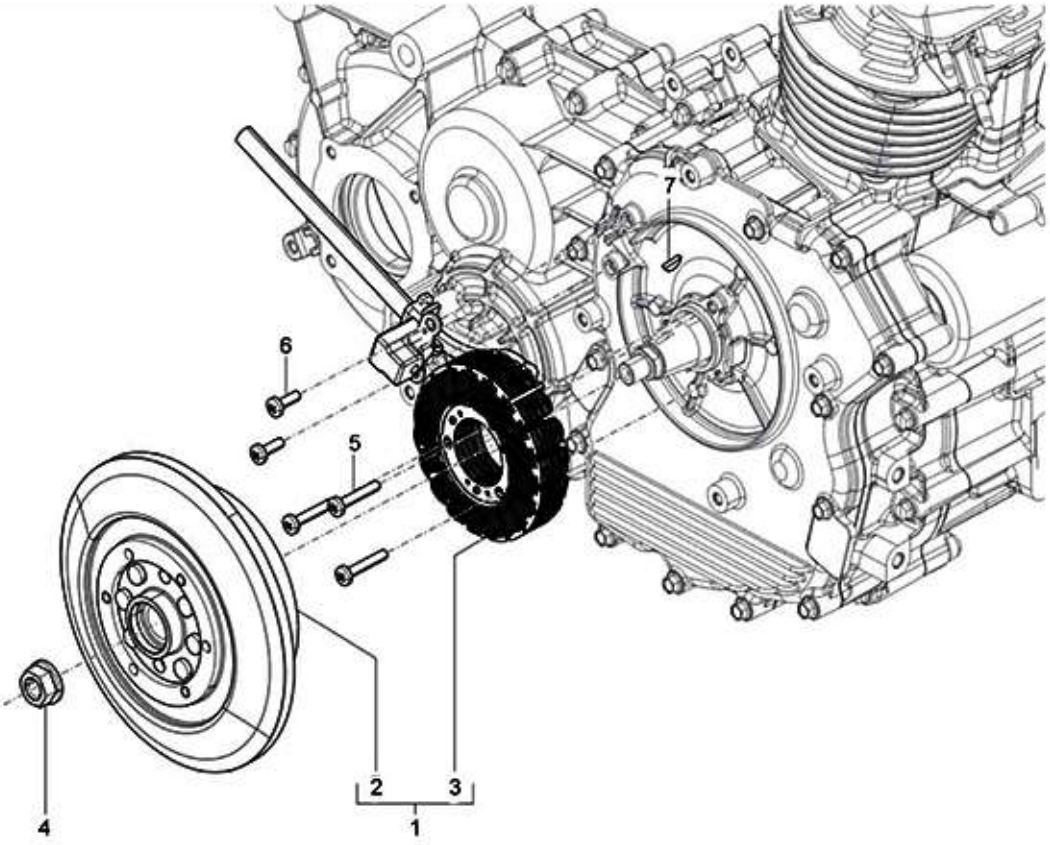
7
6
5
2
3
1
4

21

Print Date: 05-Oct-2022

PLATE-10

FLYWHEEL_A.C GENERATOR ASSY.

Fig. No.	Part No.	Description	Qty	Remarks
1	1D002080	COMPLETE A.C.GENERATOR	1	
2	1A009302	ROTAR ASSY WITH HUB	1	
3	1D001846	COMPLETE STATOR	1	
4	1A006988	NUT WITH SPRING WASHER	1	
5	1A001073	TORX HEAD SCREW M5X16	3	
6	1A013159	TORX HEAD SCREW M5X22	2	
7	000267	WOODRUFF KEY	1	

22

Print Date: 05-Oct-2022

PLATE-11

FAN COVER & SHROUD ASSY.

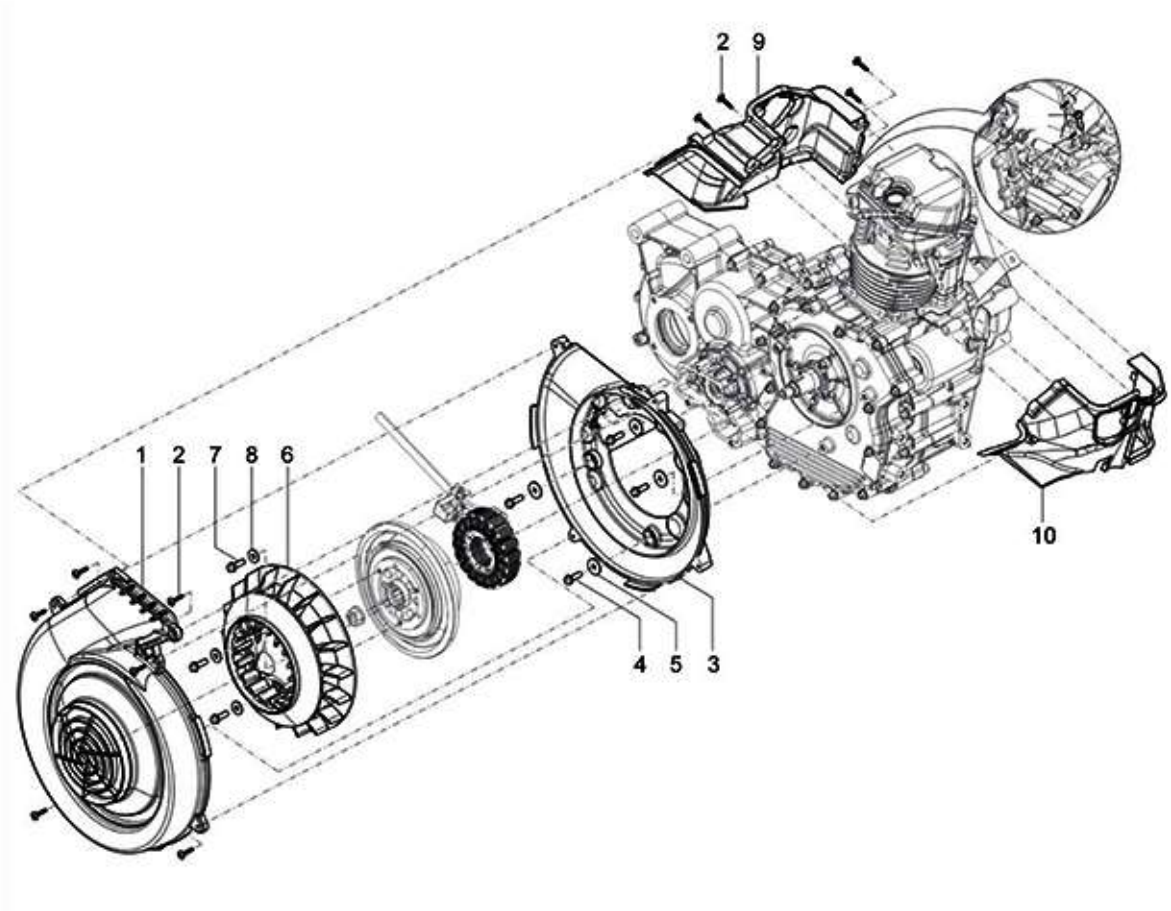
2
9
1
2
7
8
6
10
4
5
3

23

Print Date: 05-Oct-2022

PLATE-11

FAN COVER & SHROUD ASSY.

Fig. No.	Part No.	Description	Qty	Remarks
1	1A010001	FAN COVER	1	
2	1A000024	SELF TAPPING SCREW (3X20)	10	
3	1A006742	FAN COVER SUPPORT	1	
4	018639	SCREW M6X20	4	
5	B016192	WASHER 6.2X20X2	4	
6	1A000831	ASSY FAN	1	
7	1A002691	FLANGED HEX HEAD SCREW M6X20 CL10	3	
8	B019047	WASHER	3	
9	1A009270	COMPLETE SHROUD INTAKE SIDE	1	
10	1A006740	SHROUD EXHAUST SIDE	1	
11	B016620	SCREW WITH CYLINDRICAL HEAD M5X21	1	

24

Print Date: 05-Oct-2022

PLATE-12

GEAR-BOX COMPONENTS & GEAR SHIFTER

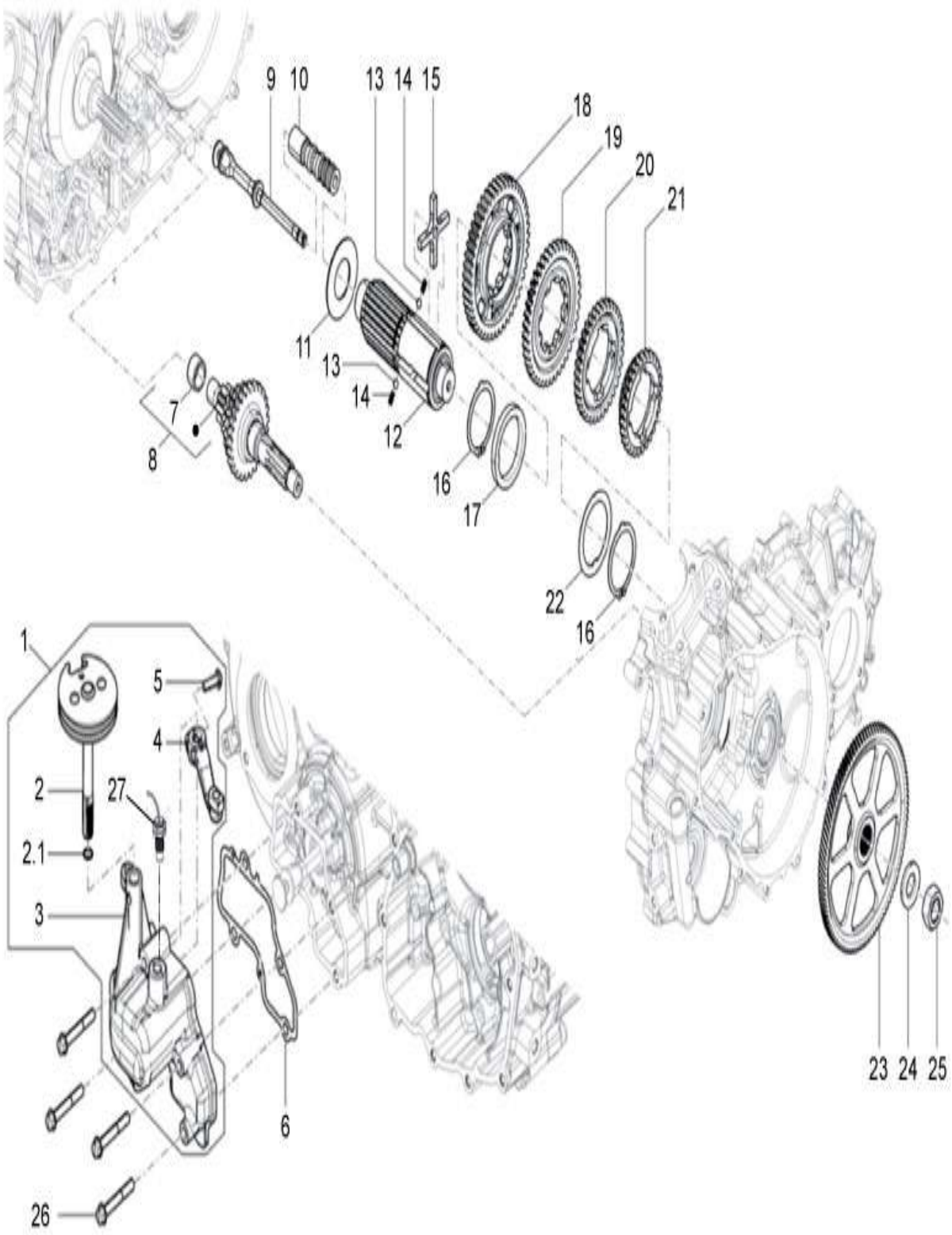
9
10
13
14
15
18
19
20
21
11
13
14
12
7
8
16
17
22
16
1
5
4
2
27
2.1
3
6
26
23
24
25

25

Print Date: 05-Oct-2022

PLATE-12

GEAR-BOX COMPONENTS & GEAR SHIFTER

Fig. No.	Part No.	Description	Qty	Remarks
1	SP1A011650	COMPLETE GEAR SHIFTER ASSY	1	
2	1A010035	COMPLETE SECTOR WITH SHAFT	1	
2.1	1A005178	O- RING	1	
3	1A012182	GEAR SHIFTER HOUSING	1	
4	SP1A012040	COMPLETE LEVER-SPD	1	
5	1A001073	TORX HEAD SCREW M5X16	1	
6	1A012334	GASKET GEAR SHIFTER HOUSING	1	
7	122032014	INNER RING - CLUSTER GEAR	1	
8	SP1A014870	CLUSTER GEAR WITH I.P.	1	
9	1A012181	STEM	1	
10	1A012846	BUSH GEAR SHIFTER	1	
11	1A007029	LOCK WASHER	1	
12	1A017112	SECONDARY GEAR SHAFT	1	
13	002139	BALL	2	
14	1A006970	SPRING	2	
15	1A010166	CROSS	1	
16	009101	SEEGER RING	2	
17	1A006701	LOCK WASHER	1	
18	1A014871	SPEED GEAR 1ST	1	
19	1A014872	SPEED GEAR 2ND	1	
20	1A014873	SPEED GEAR 3RD	1	
21	1A014874	SPEED GEAR 4TH	1	
22	1A006115	LOCK WASHER	1	
23	NS	NOT SERVICEABLE	1	
24	B018464	BELLEVILLE SPRING	1	
25	21118	HEX NUT M18 X 1.5P	1	
26	B016611	FLANGED HEX. HEAD SCREW M6X45 CL10	4	
27	1A010016	NEUTRAL SWITCH	1	

26

Print Date: 05-Oct-2022

PLATE-13

CLUTCH ASSY & CLUTCH COVER

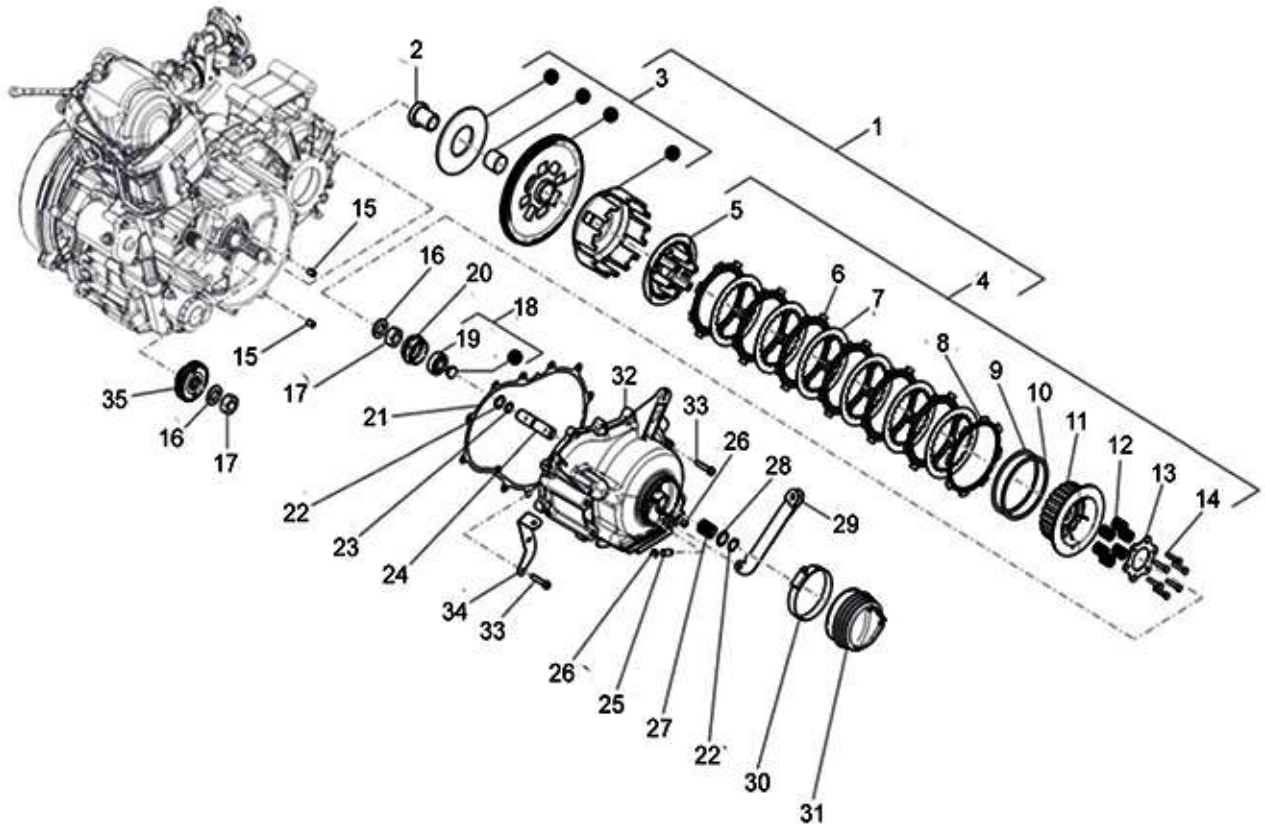
1
2
3
4
5
6
7
8
9
10
11
12
13
14
15
15
16
16
17
17
18
19
20
21
22
22
23
24
25
26
26
27
28
29
30
31
32
33
33
34
35

27

Print Date: 05-Oct-2022

PLATE-13

CLUTCH ASSY & CLUTCH COVER

Fig. No.	Part No.	Description	Qty	Remarks
1	1A010119	CLUTCH ASSY	1	
2	1A010461	SPACER	1	
3	1A012150	HOUSING CLUTCH ASSY	1	
4	1A012151	PLATE CLUTCH ASSY	1	
5	1A012157	WHEEL CLUTCH	1	
6	1A012153	FRICTION PLATE	6	
7	1A012155	PLATE CLUTCH	6	
8	1A012154	RED FRICTION PLATE	1	
9	1A012159	ANTI-JUDDER SPRING	1	
10	1A012160	ANTI-JUDDER WASHER	1	
11	1A012152	HUB CLUTCH	1	
12	1A012156	COMPRESSION SPRING	6	
13	1A012158	HOLDER CLUTCH	1	
14	1A012161	BOLT M5	1	
15	1A000708	DOWEL (Ø7,5, H=12)	2	
16	B018464	BELLEVILLE SPRING	2	
17	1A012845	HEX. NUT M16X1.25	2	
18	SP1A010560	CLUTCH PRESSURE BUSH WITH I.P.	1	
19	478261	PULLEY SHAFT BEARING	1	
20	1A010540	CLUTCH PRESSURE PLATE	1	
21	1A011940	CLUTCH COVER GASKET	1	
22	842001600	CIRCLIP DIA.16(EXT)	2	
23	B019220	O- RING (PLUNGER SHAFT)	1	
24	1A010548	PLUNGER SHAFT	1	
25	127013013	PIN CLUTCH	1	
26	843000809	CIRCLIP DIA.8(EXT) TYPE C	2	
27	127185012	SPRING - CLUTCH COVER	1	
28	120164019	RETAINING PLATE	1	
29	127460010	LINK ASSLY - CLUTCH (IMPROVED)	1	
30	120170018	HOSE CLIP - CLUTCH COVER BELOW	1	
31	127012019	BELLOW CLUTCH ACTUATING	1	
32	1A018524	CLUTCH COVER	1	
33	B018853	FLANGED HEXAGONAL HEAD SCREW M6X30	12	
34	1A008077	SUPPORT BRACKET STARTER MOTOR CABLE	1	
35	1A010208	ENGINE GEAR	1	

28

Print Date: 05-Oct-2022

PLATE-13

CLUTCH ASSY & CLUTCH COVER

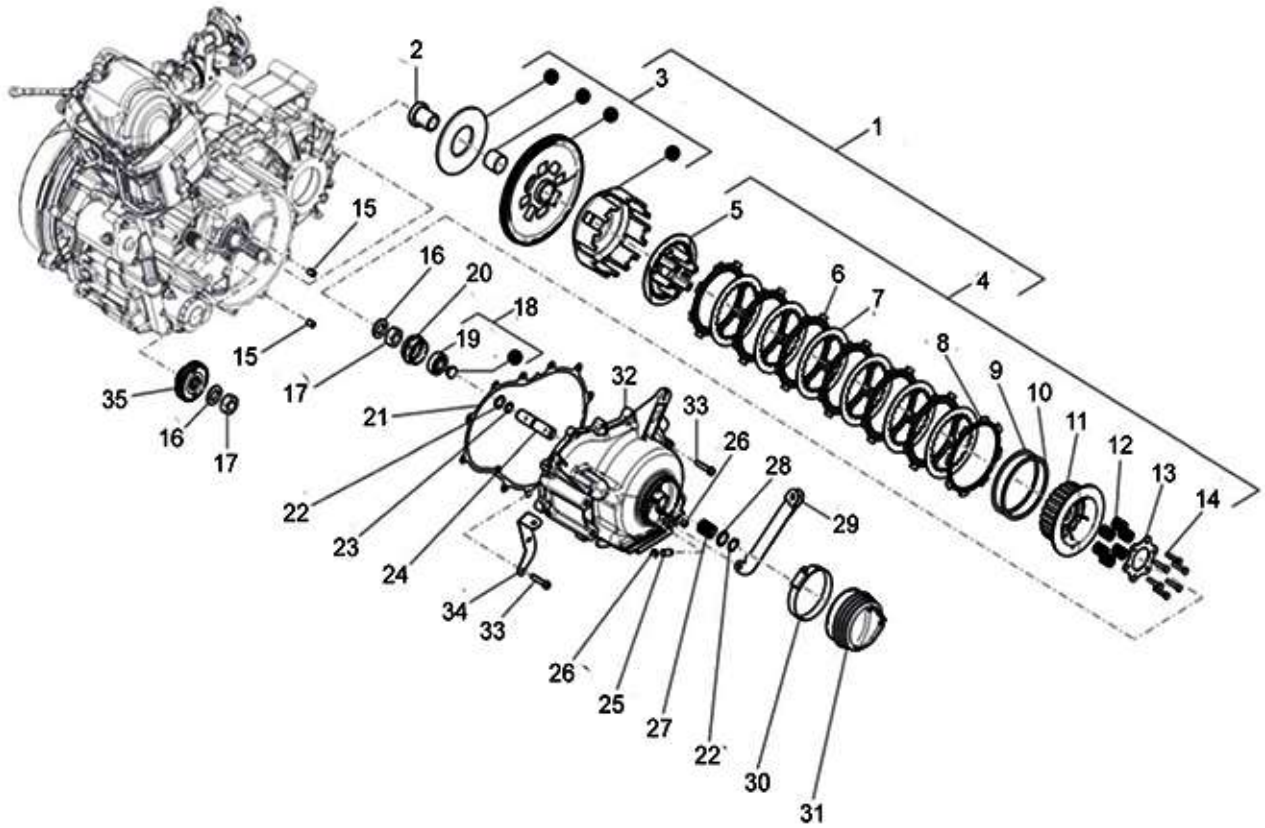
2
3
1
15
5
16
20
6
4
7
18
15
19
8
9
10
35
17
32
33
11
12
21
16
26
13
28
14
17
22
29
23
24
34
33
26
25
27
22
30
31

29

Print Date: 05-Oct-2022

PLATE-13

CLUTCH ASSY & CLUTCH COVER

Fig. No.	Part No.	Description	Qty	Remarks
36	KIT95131R	KIT CLUTCH PLATE SET FOR STEP-2 ENG. AF	1	Complete Clutch Plate Set (NI

30

Print Date: 05-Oct-2022

PLATE-14
DIFFERENTIAL

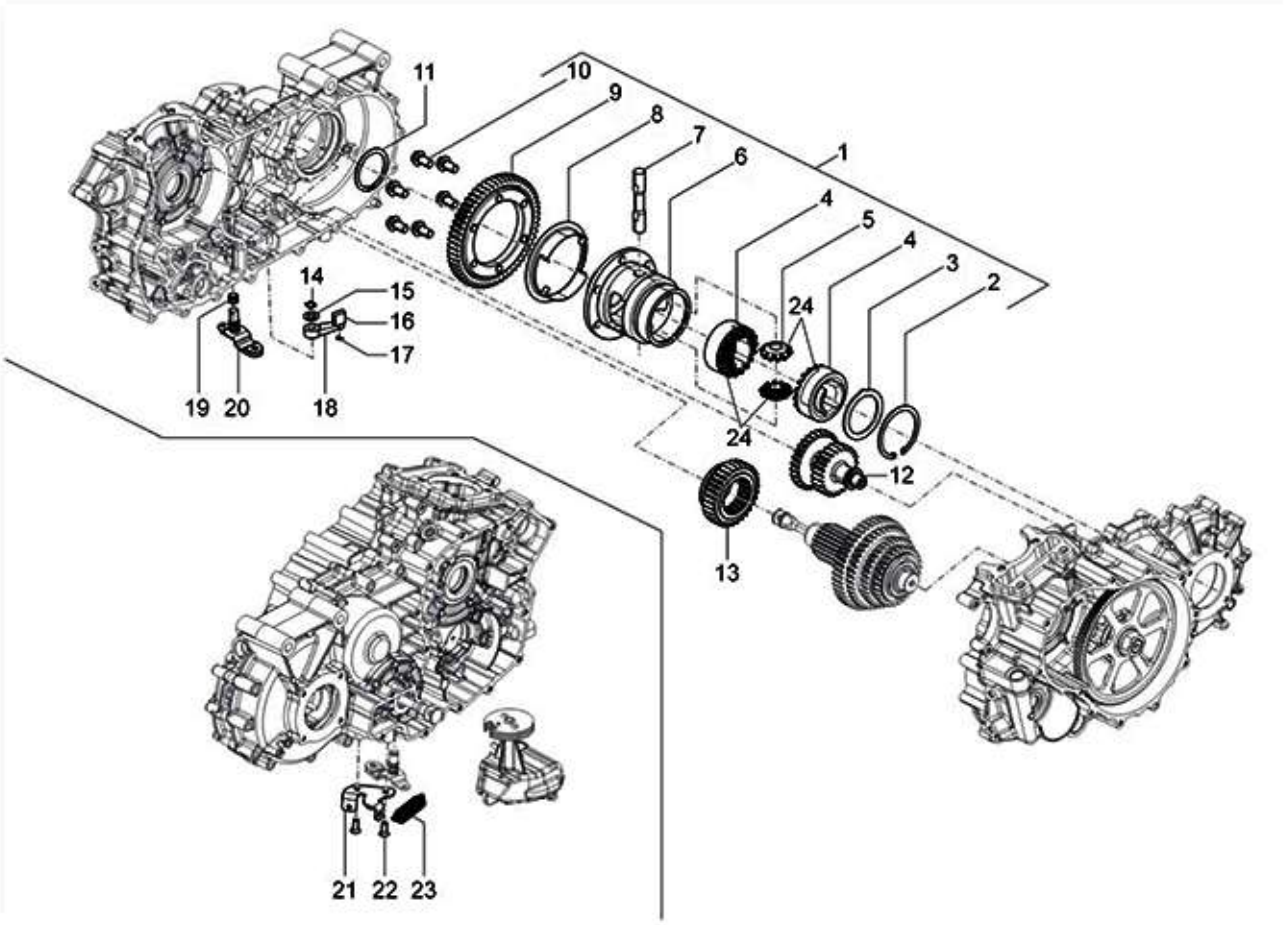
11
10
9
8
7
6
1
4
5
4
3
2
14
15
16
17
24
19
20
18
24
12
13
21
22
23

31

Print Date: 05-Oct-2022

PLATE-14
DIFFERENTIAL

Fig. No.	Part No.	Description	Qty	Remarks
1	SPCM308404	COMPLETE DIFFERENTIAL GEAR_SPD	1	PTL
1	SPCM308401	COMPLETE DIFFERENTIAL GEAR- SPD	1	LPG
1	SPCM308402	COMPLETE DIFFERENTIAL GEAR	1	CNG
2	132134	CIRCLIP	1	
3	220575	WASHER 65X3	1	
4	940028	GEAR SUN AND DIFFERENTIAL GEAR	2	SERVICE IN SET (940028)
5	165155R	DIFFERENTIAL GEAR	2	SERVICE INSET (940028)
6	288730	DIFFERENTIAL CAGE	1	
7	132129	PIN	1	
8	1A011778	SATELLITE PIN RETAINER	1	
8A	1A000612	RETAINER SCREW - PRE COATED	2	
9	CM308304	DIFFERENTIAL CROWN (PTL/LPG)	1	PTL
9	CM308301	DIFFERENTIAL CROWN -PTL/LPG	1	LPG
9	CM308302	DIFFERENTIAL CROWN	1	CNG
10	1A004807	SCREW	6	
11	006450	EXT CIRCLIP DIA 48	1	
12	1A013636	REVERSE GEAR (PTL/LPG)	1	PTL
12	1A006806	REVERSE GEAR	1	LPG
12	1A008547	REVERSE GEAR	1	CNG
13	1A009779	SLIDING GEAR	1	LPG
13	1A013633	SLIDING GEAR (PTL/LPG)	1	PTL
13	1A010632	SLIDING GEAR	1	CNG
14	006410	CIRCLIP	1	
15	1A007501	PLANE WASHER	1	
16	1A007051	SLIDER	1	
17	843000500	CIRCLIP DIA.5 (EXT) TYPE C	1	
18	1A007605	GEAR SHIFTER LEVER	1	
19	1A005176	O- RING	2	
20	1A009093	INVERTER LEVER SECTOR WITH P.I.	1	
20.1	SP1A007579	COMPL. INVERTER LEVER SECTOR(BSIV)- SPD	1	Const. of SrNo.14 to 18 & 20
21	1A008804	REVERSE CABLE REACTION BRACKET	1	
22	1A016964	CSK PHILIPS HEAD SCREW	2	
23	127111011	REVERSE GEAR SPRING	1	
24	940028	GEAR SUN AND DIFFERENTIAL GEAR	1	

32

Print Date: 05-Oct-2022

PLATE-15

THROTTLE BODY - INJECTOR - INDUCTION JOINT - PETROL

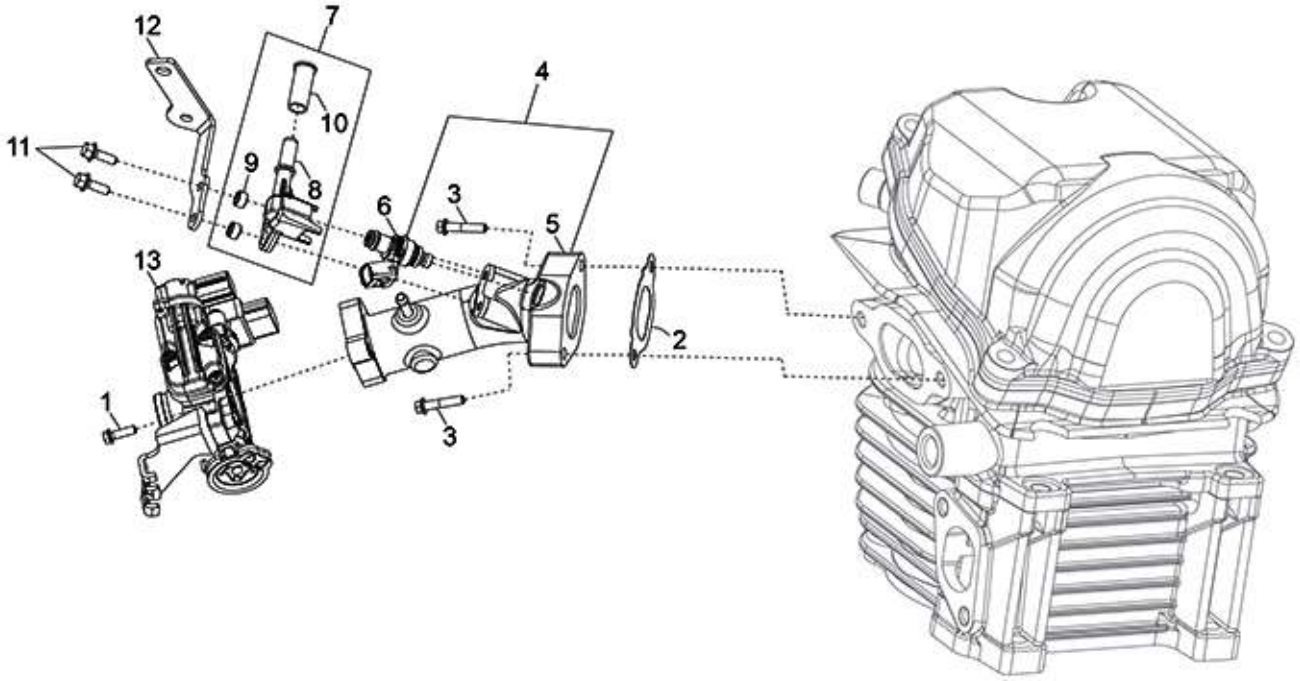
12
7
4
10
11
9
8
6
3
5
13
2
1
3

33

Print Date: 05-Oct-2022

PLATE-15

THROTTLE BODY - INJECTOR - INDUCTION JOINT - PETROL

Fig. No.	Part No.	Description	Qty	Remarks
1	018639	SCREW M6X20	1	
2	B018442	INTAKE FITTING GASKET	2	
3	B018853	FLANGED HEXAGONAL HEAD SCREW M6X30	1	
4	SP1A014453	INTAKE FITTING WITH INJECTOR	2	
5	1A015022	INTAKE FITTING WITH I.P.	1	
6	1D000698	FUEL INJECTOR	2	
7	1A003720	COMPLETE INJECTOR SUPPORT	1	
8	1A003509	INJECTOR SUPPORT WITH I.P.	1	Not Serviceable
9	1A003649	FLANGED BUSH	1	Not Serviceable
10	829504	PLUG	1	Not Serviceable
11	1A015812	FLANGED HEXAGONAL HEAD SCREW	1	
12	1A009137	FUEL PIPE BRACKET WITH I.P.	1	
13	1A019310	THROTTLE BODY	2	
14	1A014958	TPS/O-RING KIT	1	NI
15	1A014959	STEPPER ENGINE KIT	1	NI
16	1A014957	O-RING	1	NI -Under Development
17	1D001198	SEAL RINGS KIT	1	NI -Under Development
18	1D001157	SEAL RING (O-RING)	1	NI -Under Development
19	1D001158	SEAL RING (O-RING)	1	NI -Under Development

34

Print Date: 05-Oct-2022

PLATE-16

FUEL INJECTION SYSTEM - CARBURETOR - GAS

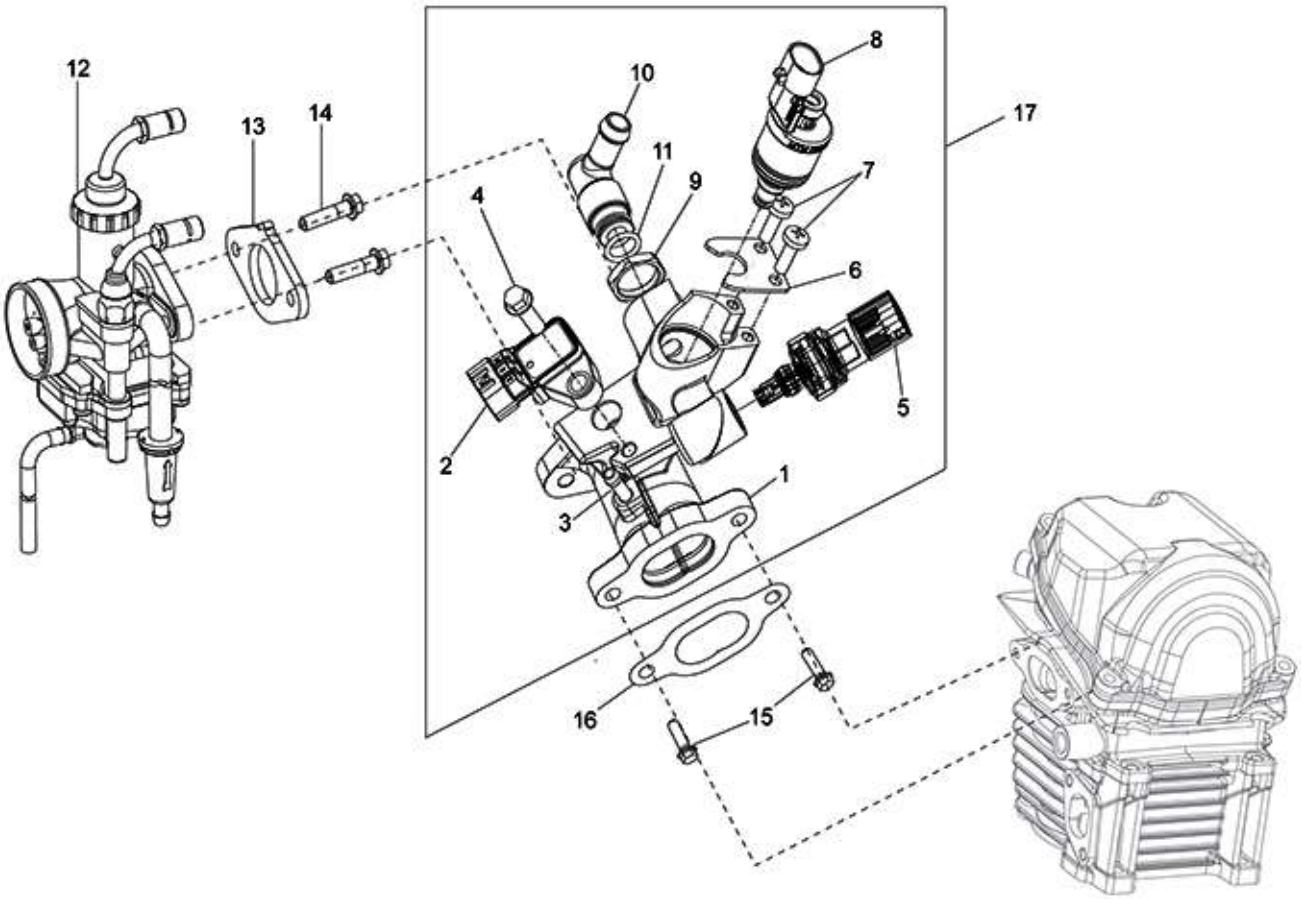
12
13
14
10
8
17
11
9
7
4
6
5
2
1
3
16
15

35

Print Date: 05-Oct-2022

PLATE-16

FUEL INJECTION SYSTEM - CARBURETOR - GAS

Fig. No.	Part No.	Description	Qty	Remarks
1	1A010172	INTAKE FITTING WITH I.P.	1	
2	642786	AIR PRESSURE SENSOR	1	
3	1A011524	PIPE FITTING	1	Not Serviceable
4	434541	SCREW	1	
5	1A011438	SENSOR	1	
6	1A009606	INIECTOR RETAINING PLATE	1	
7	1A015812	FLANGED HEXAGONAL HEAD SCREW	2	
8	1A009527	INJECTOR	1	
9	1A010185	SMALL NUT	1	
10	1A010109	PIPE FITTING	1	
11	1A009702	O-RING 11X2	1	
12	CM166109	CARBURATOR (LPG / CNG)	1	
13	B016016	INTAKE FITTING GASKET WITH O-RING	1	
14	B016774	FLANGED HEXAGONAL SCREW M6X25	2	
15	018639	SCREW M6X20	2	
16	B018442	INTAKE FITTING GASKET	1	
17	SP1A015853	COMPLETE INTAKE FITTING_SPD	1	

36

Print Date: 05-Oct-2022

PLATE-17
CARBURETOR CHILD PARTS

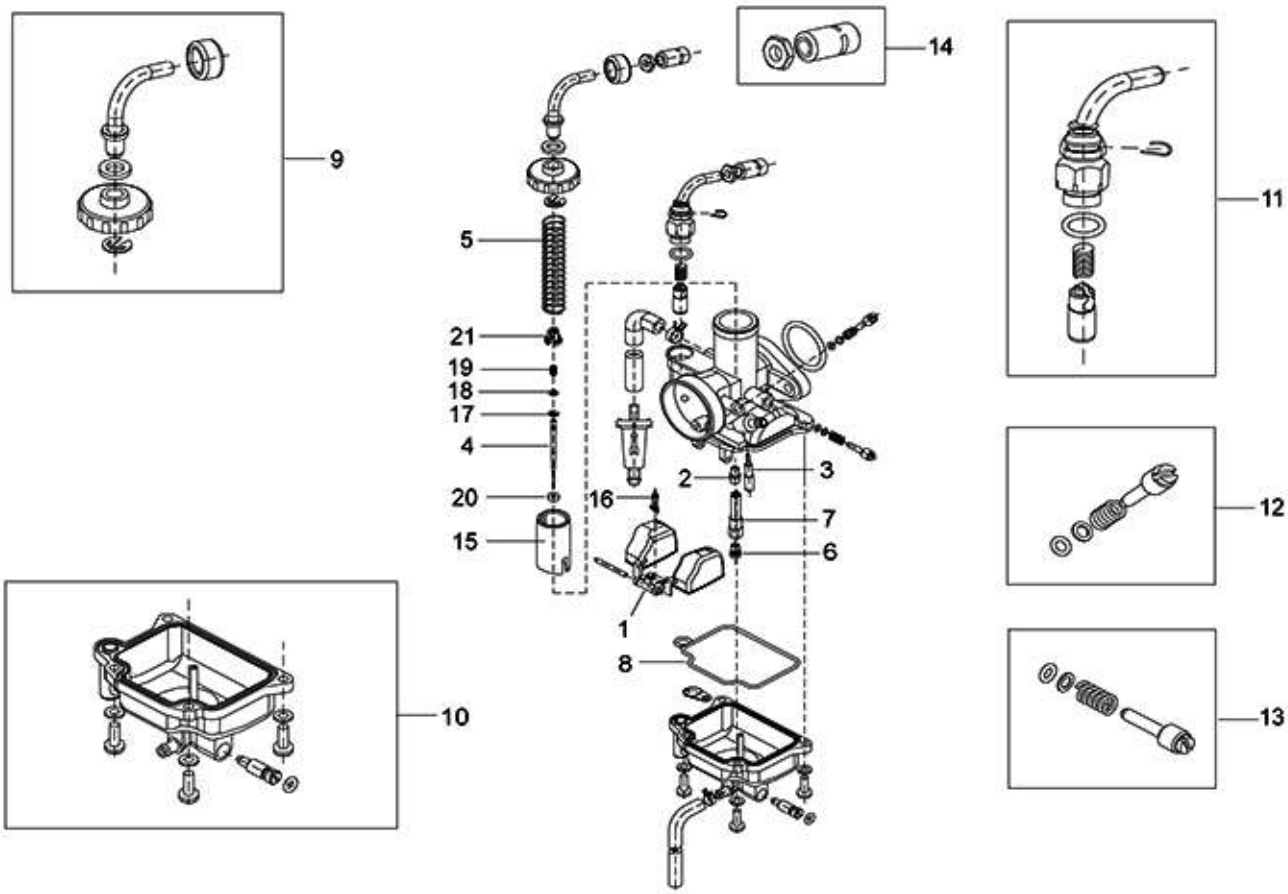
9
14
11
5
21
19
18
17
4
20
15
16
2
3
7
6
1
8
12
13
10

37

Print Date: 05-Oct-2022

PLATE-17

CARBURETOR CHILD PARTS

Fig. No.	Part No.	Description	Qty	Remarks
1	B016823	FLOAT	1	
3	CM167801	PILOT JET	1	CNG/LPG
4	CM263504	NEEDLE JET	1	Under Development
5	B016829	SPRING (PV)	1	
6	CM167701	MAXIMUM JET	1	LPG/CNG
6	CM167704	MAIN JET (CNG)	1	CNG
7	CM167903	DIFFUSER	1	
8	B016834	FLOAT CHAMBER GASKET	1	
9	B016825	GAS VALVE COVER KIT	1	UCAL Make carburetor
10	B016822	FLOAT CHAMBER BODY ASSY KIT	1	UCAL Make carburetor
11	1A000542	STARTER KIT	1	UCAL Make carburetor
12	CM264703	KIT AIR SCREW	1	
13	B016828	IDLE ADJUSTER KIT	1	UCAL Make carburetor
14	B016869	CABLE ADJUSTER KIT	1	UCAL Make carburetor
15	1A014508	PISTON VALVE	1	Under Development
16	B017542	NEEDLE VALVE	1	
17	1A004221	E-RING	1	
18	1A004222	PACKGING	1	
19	1A004223	SPRING	1	
20	1A004224	RING	1	
21	1A004225	HOLDER	1	
22	CM263603	CONIC NEEDLE	1	NI

38

Print Date: 05-Oct-2022

PLATE-18
SILENCER

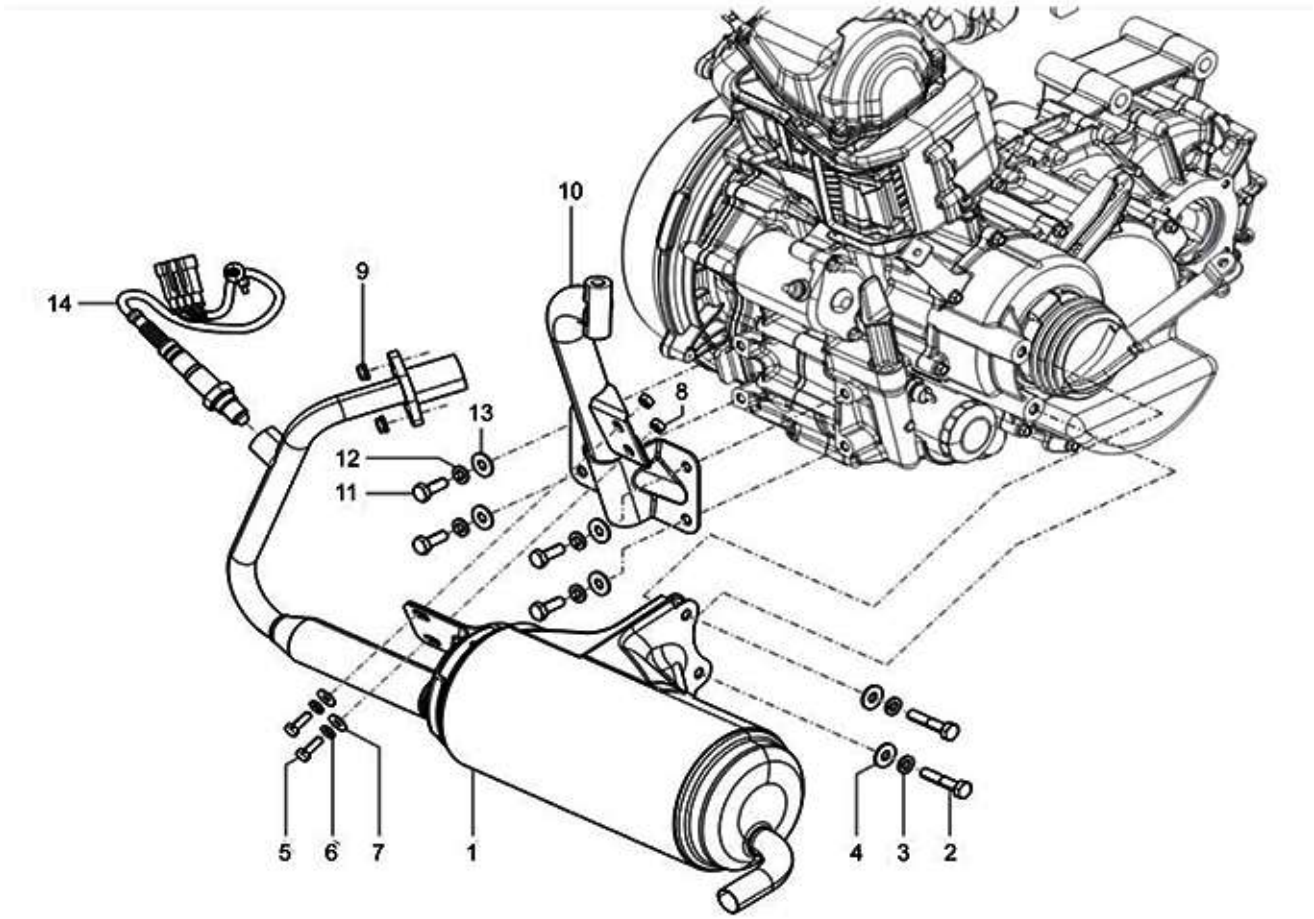
14
9
10
8
13
12
11
5
6
7
1
4
3
2

39

Print Date: 05-Oct-2022

PLATE-18
SILENCER

Fig. No.	Part No.	Description	Qty	Remarks
1	1A021039R	COMPLETE MUFFLER	1	CNG/LPG
1	1A017410	COMPLETE MUFFLER	1	PETROL &LPG MONO
2	30074	HEX HEAD BOLT M8 X 40 CL 8.8	2	
3	016408	SPRING WASHER	2	
4	2383	PLAIN WASHER M20X8.5X2	2	
5	31089	HEX HEAD SCREW M6X18 CL 8.8	2	
6	016406	SPRING WASHER	2	
7	013880	PLAIN WASHER	2	
8	20106	HEX NUT M6	2	
9	436947	FLANGED NUT M7X1 H=8	2	
10	B075593	BKT SUB ASSLY ENGINE SUPPORT REAR	1	
11	B076143	HEX HEAD BOLT M8 X 25	4	
12	016408	SPRING WASHER	4	
13	2383	PLAIN WASHER M20X8.5X2	4	
14	1A014335	LAMBDA SENSOR	1	

40

Print Date: 05-Oct-2022

PLATE-19
COMPLETE H.T. COIL

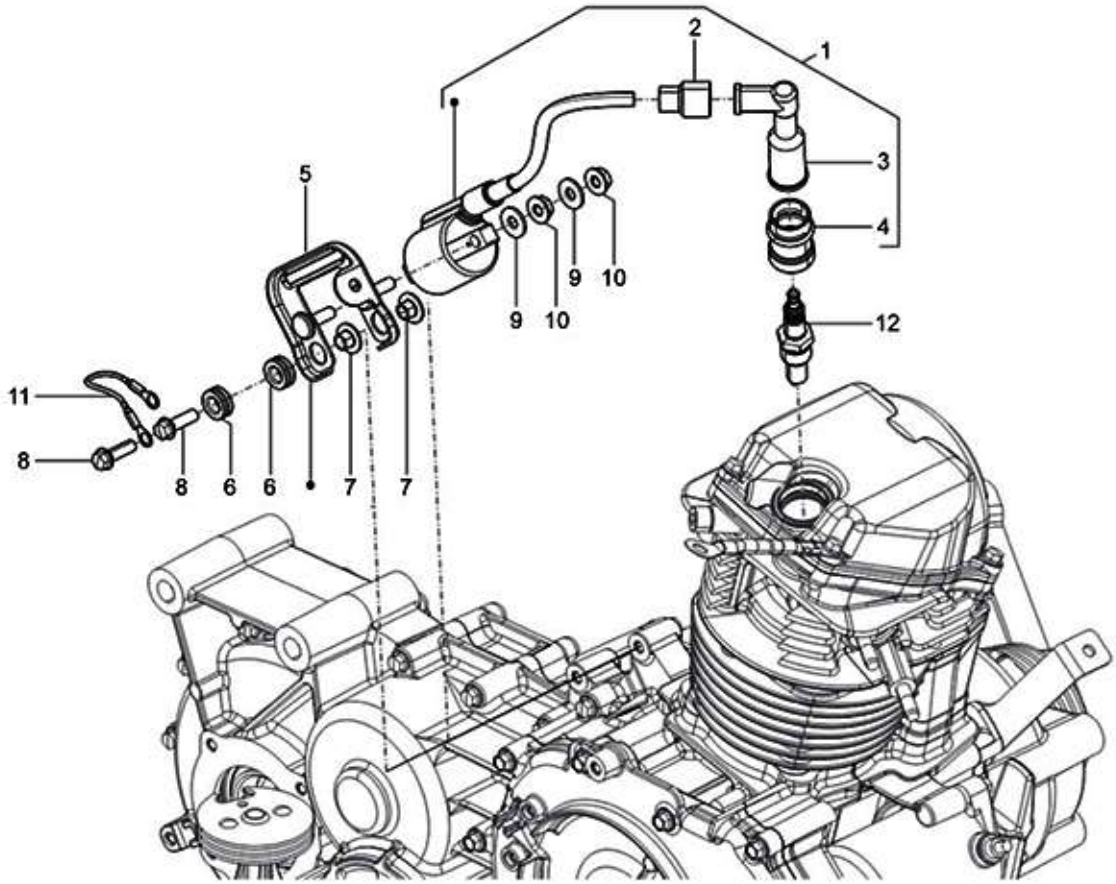
1
2
3
4
5
6
6
7
7
8
8
9
9
10
10
11
12

41

Print Date: 05-Oct-2022

PLATE-19

COMPLETE H.T. COIL

Fig. No.	Part No.	Description	Qty	Remarks
1	1A001794	COMPLETE H.T.COIL	1	Petrol
1	1A015287	HT COIL COMPLETE WITH CUP	1	CNG/LPG
2	642537	PROTECTION CAP	1	Petrol
2	1A017558	PROTECTION CAP	1	CNG/LPG
3	643149	SPARK PLUG CAP	1	Petrol
3	1A017559	SPARK PLUG CAP	1	CNG/LPG
4	1A001795	SPARK PLUG PROTECTION COLLAR	1	Petrol
4	1A017560	SPARK PLUG PROTECTION COLLAR	1	CNG/LPG
5	B016552	COIL SUPPORT BRACKET WITH I.P.	1	Petrol
5	1A011407	COMPLETE COIL SUPPORT BRACKET	1	CNG/LPG
6	B014063	BUFFER DAMPER	2	
7	B014066	SPACER	2	
8	018639	SCREW M6X20	2	
9	013880	PLAIN WASHER	2	
10	872816	FLANGED NUT	2	
11	1D001894	GROUND WIRE	1	
12	643367	SPARK PLUG	1	

42

Print Date: 05-Oct-2022

PLATE-20
AIR FILTER

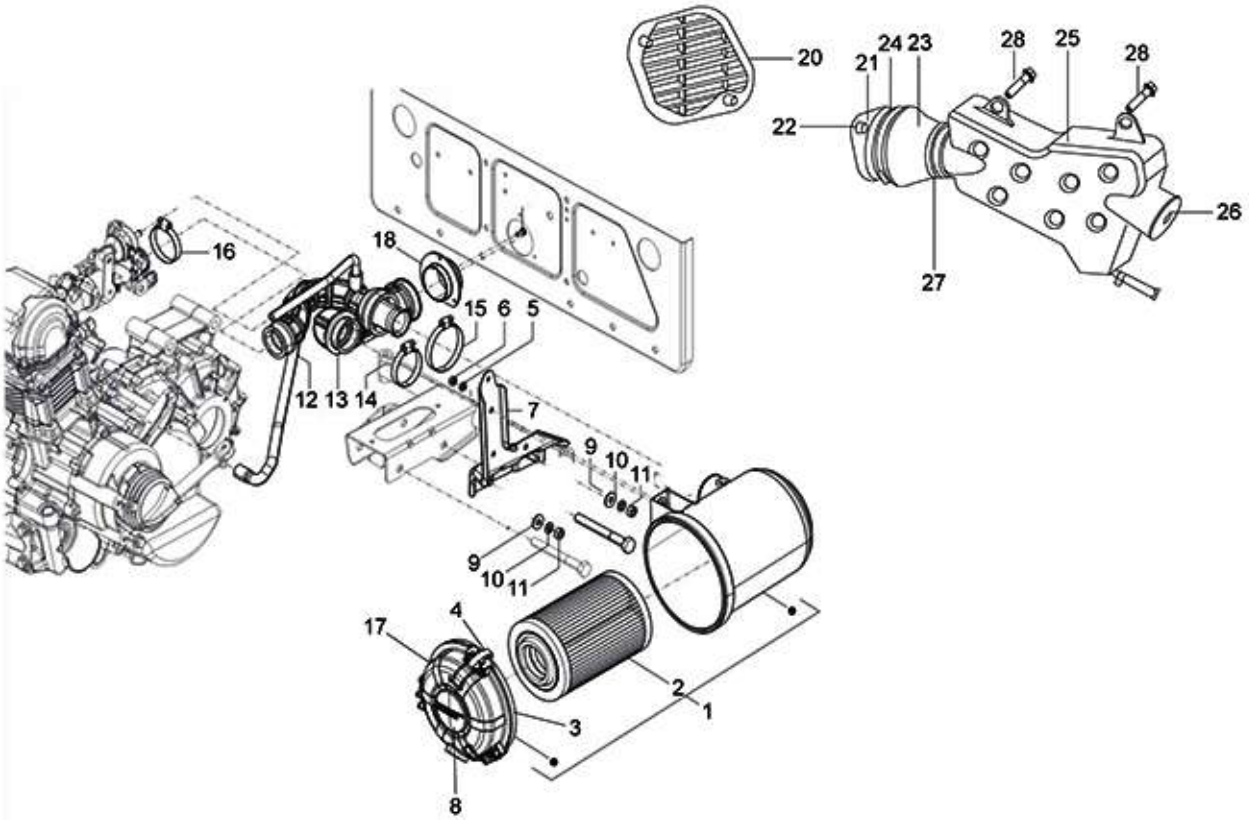
20
21
24
23
28
25
28
22
26
27
16
18
15
6
5
12
13
14
7
9
10
11
9
10
11
4
17
2
1
3
8

43

Print Date: 05-Oct-2022

PLATE-20
AIR FILTER

Fig. No.	Part No.	Description	Qty	Remarks
1	B073441	AIR FILTER ASSLY.W/O BKT	1	
2	B076112	AIR FILTER ELEMENT	1	
3	940072	AIR FILTER COVER GASKET	1	
4	920088	CLAMP	3	
5	016406	SPRING WASHER	1	
6	20106	HEX NUT M6	1	
7	B076111	BRACKET AIR FILTER SUPPORT COMPLETE	1	Under Development
8	940071	DUST VALVE	1	
9	2383	PLAIN WASHER M20X8.5X2	2	
10	016408	SPRING WASHER	2	
11	20108	HEX NUT M8	2	
12	1A014452	AIR BOX / THROTTLE BODY COUPLING	1	PTL
12	1A009554	CARBURATOR /AIR BOX COUPLING	1	CNG/LPG
13	1A007489	AIR CLEANER/VEHICLE MANIFOLD	1	
14	604756	HOSE CLIP	1	
15	604553	WORM CLIP	1	
16	604756	HOSE CLIP	1	
17	940069	AIR FILTER COVER-(UG)	1	
18	B041089	RESTRACTOR FOR AIR FILTER-SNORKEL CNG	1	
19	660168	PAN SELF TP. SCREW 10 SGX13AB	3	
20	B074971	INTAKE GRILL FOR SNORKEL SYSTEM	1	
21	B074970	ADAPTER FOR SNORKEL AIR INTAKE	1	
22	D9004159230	SCREW, W / WASHER	1	
23	1A006592	AIR CLEANER/VEHICLE MANIFOLD	1	
24	1A007153	HOSE CLAMP	1	
25	1A006593	PIPE COOL AIR INTAKE	1	
26	1A007635	DAMPING RING	1	
27	B076918	HOSE CLIP (FORDIA 42-55)	1	
28	645037	HEX HEAD SCREW M8 X 22 CL 8.8	3	

44

Print Date: 05-Oct-2022

PLATE-21

MAIN FRAME/BATTERY BKT/JACK BKT

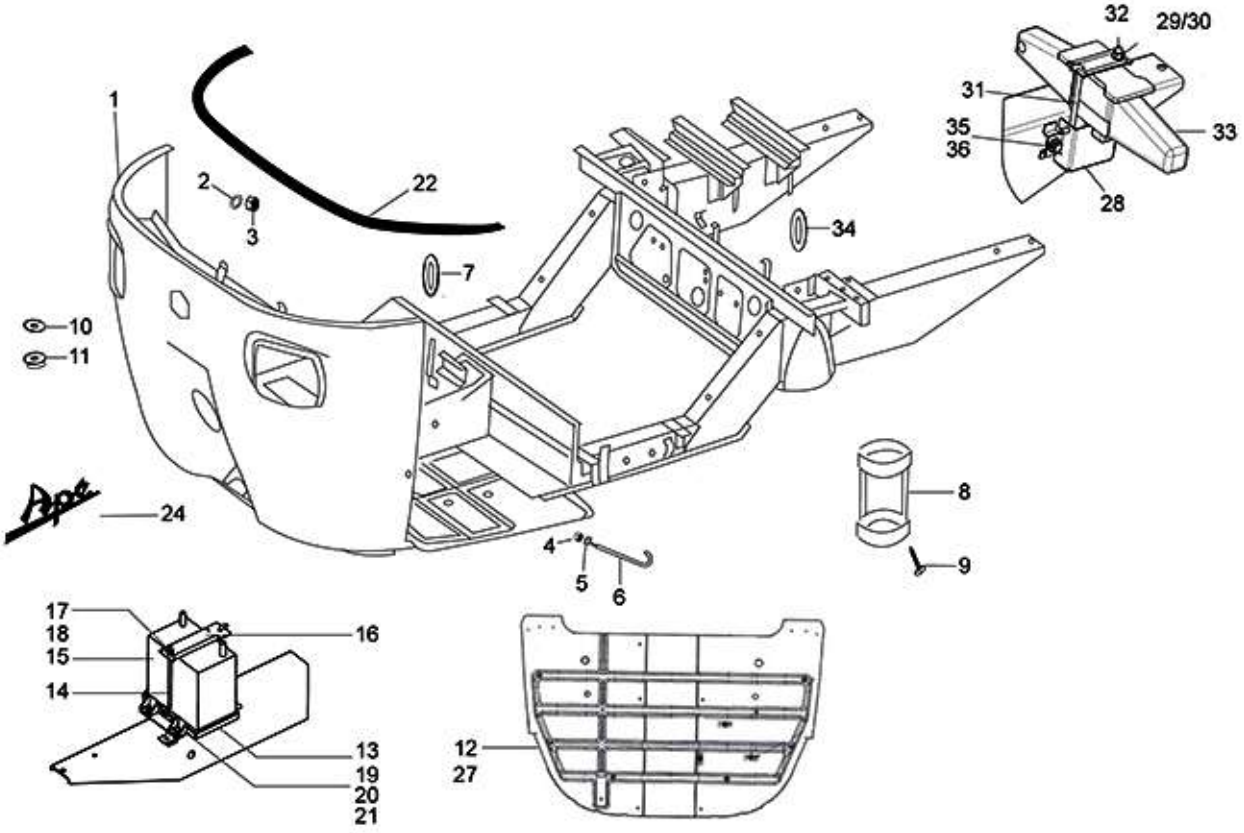
32
29/30
31
35
36
33
28
1
2
3
22
34
7
10
11
8
24
4
5
6
9
17
18
15
14
16
13
19
20
21
12
27

45

Print Date: 05-Oct-2022

PLATE-21

MAIN FRAME/BATTERY BKT/JACK BKT

Fig. No.	Part No.	Description	Qty	Remarks
1	6B001275BW	MAIN FRAME WITH HSRP_PTL-BW	1	PTL
1	6B001275BY	MAIN FRAME WITH HSRP_PTL-BY	1	PTL
1	6B001275CB	MAIN FRAME WITH HSRP_PTL-CB	1	PTL
1	6B001275EG	MAIN FRAME WITH HSRP_PTL-EG	1	PTL
1	6B001275GY	MAIN FRAME WITH HSRP_PTL-GY	1	PTL
1	6B001275NB	MAIN FRAME WITH HSRP_PTL-NB	1	PTL
1	6B001276BW	MAIN FRAME WITH HSRP_C/L-BW	1	CNG/LPG (ALTERNATE FUEL)
1	6B001276BY	MAIN FRAME WITH HSRP_C/L-BY	1	CNG/LPG (ALTERNATE FUEL)
1	6B001276CB	MAIN FRAME WITH HSRP_C/L-CB	1	CNG/LPG (ALTERNATE FUEL)
1	6B001276EG	MAIN FRAME WITH HSRP_C/L-EG	1	CNG/LPG (ALTERNATE FUEL)
1	6B001276GY	MAIN FRAME WITH HSRP_C/L-GY	1	CNG/LPG (ALTERNATE FUEL)
1	6B001276NB	MAIN FRAME WITH HSRP_C/L-NB	1	CNG/LPG (ALTERNATE FUEL)
1	6B000893BL	MAIN FRAME ASSLY_MONO FUEL LPG-BSVI-BL	1	Mono Fuel (LPG)
1	6B000893BW	MAIN FRAME ASSLY_MONO FUEL LPG-BSVI-BW	1	Mono Fuel (LPG)
1	6B000893CB	MAIN FRAME ASSLY_MONO FUEL LPG-BSVI-CB	1	Mono Fuel (LPG)
1	6B000893EG	MAIN FRAME ASSLY_MONO FUEL LPG-BSVI-EG	1	Mono Fuel (LPG)
1	6B000893GY	MAIN FRAME ASSLY_MONO FUEL LPG-BSVI-GY	1	Mono Fuel (LPG)
1	6B000893NB	MAIN FRAME ASSLY_MONO FUEL LPG-BSVI-NB	1	Mono Fuel (LPG)
1	6B000893WR	MAIN FRAME ASSLY_MONO FUEL LPG-BSVI-WR	1	Mono Fuel (LPG)
1	6B000893BY	MAIN FRAME ASSLY_MONO FUEL LPG-BSVI-BY	1	Mono Fuel (LPG)
2	3054	PLAIN WASHER	5	
3	20104	HEX NUT M4	5	
4	20108	HEX NUT M8	1	
5	3058	PLAIN WASHER 15X8.4X1.5	1	
6	604954	TENSION ROD	1	
7	B075989	GROMMET FRT PART OF CENTRAL BEAM	1	
8	B041392	BOTTLE CARRIER STAND	1	
9	660168	PAN SELF TP. SCREW 10 SGX13AB	2	
10	B075979	GROMMET	2	
11	604756	HOSE CLIP	2	
12	B074150	CABIN FLOOR SUB-ASSY. (PET/ DLS)	1	
13	616649	BATTERY TRAY	1	
14	632508	TENSION ROD ASSY. (BATTERY MOUNTING.)	1	
15	652253R	BATTERY 12V-35AH	1	
16	B003978	BATTERY HOLDING PLATE	1	

46

Print Date: 05-Oct-2022

PLATE-21

MAIN FRAME/BATTERY BKT/JACK BKT

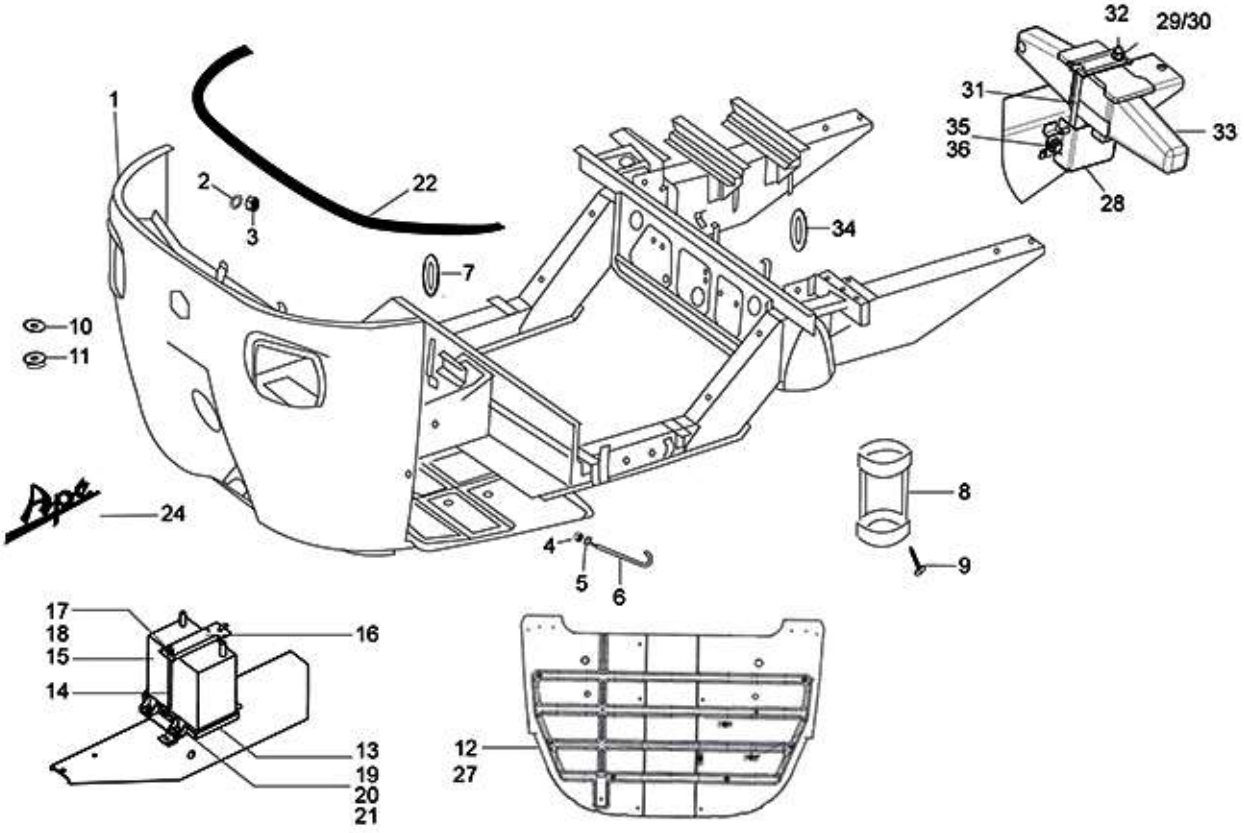
32
29/30
31
35
36
33
28
1
2
3
22
34
7
10
11
8
24
4
5
6
9
17
18
15
14
16
13
19
20
21
12
27

47

Print Date: 05-Oct-2022

PLATE-21

MAIN FRAME/BATTERY BKT/JACK BKT

Fig. No.	Part No.	Description	Qty	Remarks
17	20108	HEX NUT M8	1	
18	3058	PLAIN WASHER 15X8.4X1.5	1	
19	016408	SPRING WASHER	1	
20	13861	PLAIN WASHER 20X8.2X2.5	4	
21	31118	SCREW M8X20	4	
22	B024474	BEADDING LINING	1	
23	NOT APP.	COLLER BOLT M8 X 1.25 X 30	1	
24	B078919	APE CITY STICKER (FRONT PANEL)	1	
25	B074657	BEEDING DOME SIDE PILLAR (LPG/CNG)	1	
26	B074637	BEEDING DOME SIDE PILLAR (PET/DLS)	1	
27	B079078ED	CABIN FLOOR SUB-ASSY. (LPG / CNG)	1	
28	B076012	JACK BOX	1	
29	13861	PLAIN WASHER 20X8.2X2.5	1	
30	20108	HEX NUT M8	1	
31	B075966	RR TENSION ROD	1	
32	B075967	FR TENSION ROD	1	
33	B076650R	JACK ASSLY	1	
34	B075989	GROMMET FRT PART OF CENTRAL BEAM	1	
35	652562	HEX. SCREW M8 X 1.25 X 14 WITH SPRING WA	2	
36	2383	PLAIN WASHER M20X8.5X2	2	

48

Print Date: 05-Oct-2022

PLATE-22

PASS. BODY WITH DOORS &HOOD FRAME & SOFT TOP

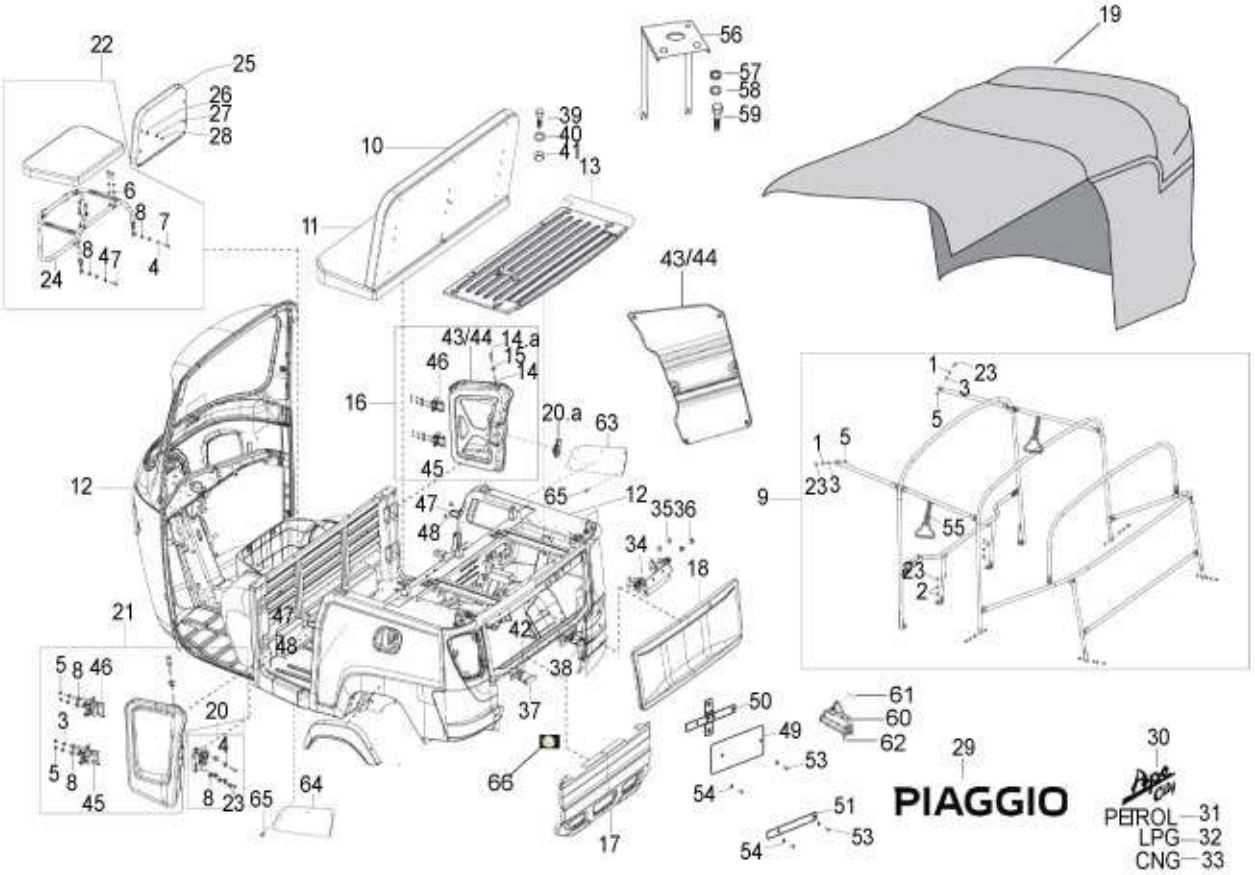
22
25
26
27
28
6
8
7
8
47
4
24
10
11
39
40
41
13
56
57
58
59
19
43/44
43/44
14.a
15
14
46
16
20.a
63
45
12
47
48
65
12
35
36
34
18
9
1
23
3
5
1
5
23
3
55
23
2
21
47
48
42
38
5
8
46
3
20
37
50
49
53
61
60
62
29
30
5
8
45
4
8
23
65
64
66
54
51
53
54
17
PIAGGIO
PETROL 31
LPG 32
CNG 33

49

Print Date: 05-Oct-2022

PLATE-22

PASS. BODY WITH DOORS &HOOD FRAME & SOFT TOP

Fig. No.	Part No.	Description	Qty	Remarks
1	3056	PLAIN WASHER M6 OD12	2	
2	3058	PLAIN WASHER 15X8.4X1.5	1	
3	16405	SPRING WASHER M5	2	
4	016408	SPRING WASHER	2	
5	20106	HEX NUT M6	4	
6	20108	HEX NUT M8	2	
7	31122	HEX HD. SCREW M8X30 CL 8.8	2	
8	2383	PLAIN WASHER M20X8.5X2	4	
9	KIT95125R	APE CITY DLX BSVI HOOD STRUCTURE	1	
10	6B001822	PASSENGER BACKREST S/A APE CITY PAX FR	1	CNG/LPG
10	B024512	PASSENGER BACKREST	1	PTL
11	6B001823	PASSENGER SEAT S/A PAX BOTTOM FR	1	CNG/LPG
11	B024516	PASS DRIVER SEAT ASSY (CNG/LPG)	1	PTL
12	6B000758BW	ASSLY PASS. BODY PETROL_BSVI-BW	1	
12	6B000758BY	ASSLY PASS. BODY PETROL_BSVI-BY	1	
12	6B000758CB	ASSLY PASS. BODY PETROL_BSVI-CB	1	
12	6B000758EG	ASSLY PASS. BODY PETROL_BSVI-EG	1	
12	6B000758GY	ASSLY PASS. BODY PETROL_BSVI-GY	1	
12	6B000758NB	ASSLY PASS. BODY PETROL_BSVI-NB	1	
12	6B000965BW	ASSLY PASS. BODY CNG/LPG_BSVI-BW	1	
12	6B000965BY	ASSLY PASS. BODY CNG/LPG_BSVI-BY	1	
12	6B000965CB	ASSLY PASS. BODY CNG/LPG_BSVI-CB	1	
12	6B000965EG	ASSLY PASS. BODY CNG/LPG_BSVI-EG	1	
12	6B000965GY	ASSLY PASS. BODY CNG/LPG_BSVI-GY	1	
12	6B000965NB	ASSLY PASS. BODY CNG/LPG_BSVI-NB	1	
13	B075724ED	ENGINE COMP DOOR ASSLY	1	
13	B075562ED	ENGINE COMP DOOR ASSLY (CNG/LPG)	1	
14	6B001539	POP-UP KNOB RH	1	
14.a	6B001518	POP-UP KNOB LH	1	
15	6B001519	GROMMET(GUIDE FOR LATCH OPENING LINK)	2	
16	6B001332ED	DOOR ASSLY-RH	1	
17	B077970ED	ASSLY VISUAL BARRIER BSIV	1	
18	B075531ED	TAIL GATE ASSY.	1	
19	6B003924R	SOFT TOP ASSEMBLY-NON FR	1	PTL common P/N for all colour
19	6B003924	SOFT TOP ASSEMBLY BLACK	1	PTL

50

Print Date: 05-Oct-2022

PLATE-22

PASS. BODY WITH DOORS &HOOD FRAME & SOFT TOP

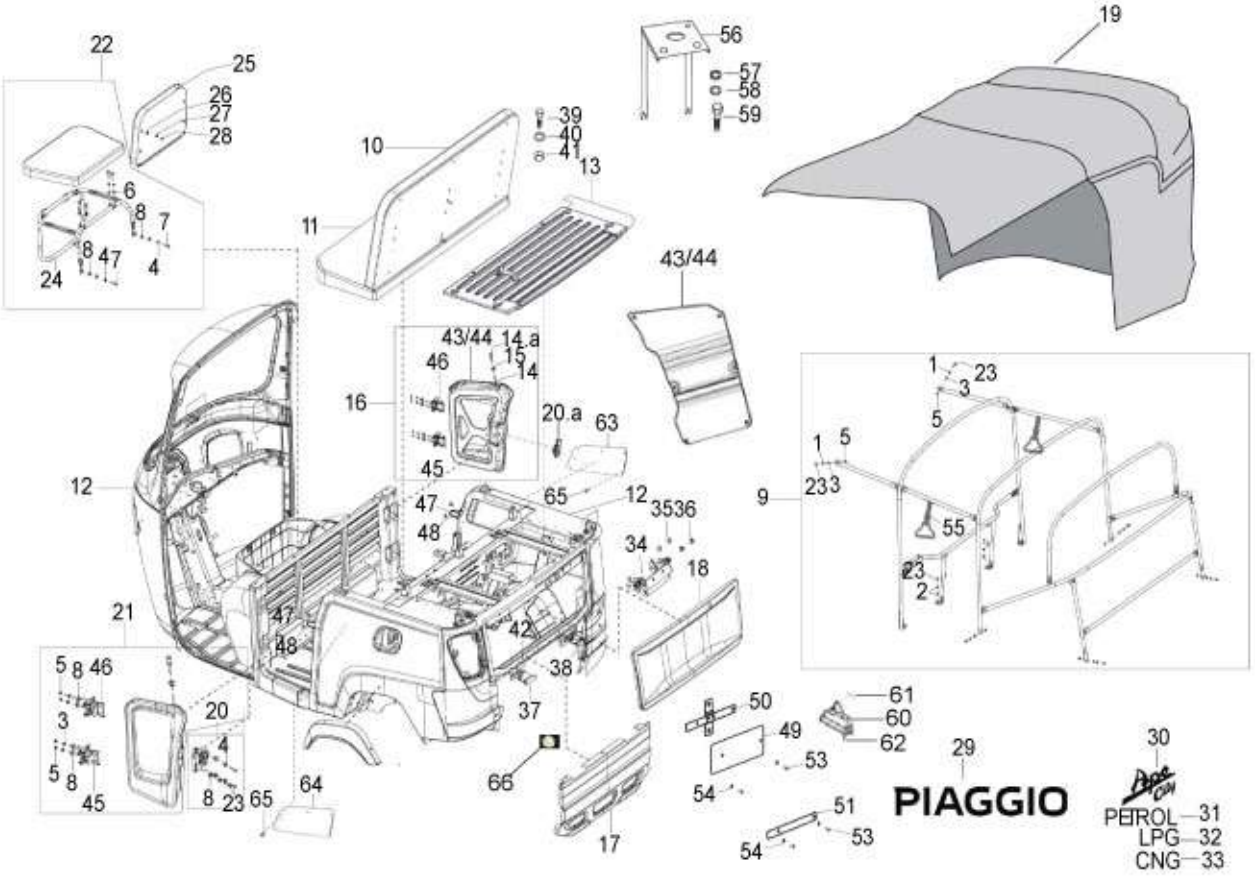
22
25
26
27
28
6
8
7
8
47
4
24
10
11
39
40
41
13
56
57
58
59
19
43/44
43/44
14.a
15
14
46
16
20.a
63
45
12
47
48
65
12
35
36
34
18
9
1
23
3
5
1
5
23
3
55
23
2
21
47
48
42
38
5
8
46
3
20
37
50
49
53
61
60
62
29
30
4
5
8
45
8
23
65
64
66
54
51
53
54
17
PIAGGIO
PETROL 31
LPG 32
CNG 33

51

Print Date: 05-Oct-2022

PLATE-22

PASS. BODY WITH DOORS &HOOD FRAME & SOFT TOP

Fig. No.	Part No.	Description	Qty	Remarks
19	6B003925	SOFT TOP ASSEMBLY YELLOW (BLACK INNER)	1	PTL
19	6B003926	SOFT TOP ASSEMBLY BROWN	1	PTL
19	6B003927	SOFT TOP ASSEMBLY RAL-8025(PALE BROWN)	1	PTL
19	6B003928	SOFT TOP ASSEMBLY RAL 5012 (GLOSSY BLUE)	1	PTL
19	6B003929	SOFT TOP ASSEMBLY RAL 4005 (BLUE LILAC)	1	PTL
19	6B003930	SOFT TOP ASSEMBLY RAL 5002 (ULTRAMARINE BLUE)	1	PTL
19	6B003931	SOFT TOP ASSEMBLY PINK (NON FR) RAL 4010 (TELEMAGENTA)	1	PTL
19	6B003932R	SOFT TOP ASSEMBLY - FR	1	CNG LPG common P/N for all colour
19	6B003932	SOFT TOP ASSEMBLY BLACK	1	CNG LPG
19	6B003933	SOFT TOP ASSEMBLY YELOW	1	CNG LPG
19	6B003934	SOFT TOP ASSEMBLY BROWN	1	CNG LPG
19	6B003935	SOFT TOP -YELLOW BLACK INNER YELLOW	1	CNG LPG
20	6B000637	LATCH ASSLY LH	1	
20.a	6B000638	LATCH ASSLY RH	1	
21	6B001331ED	DOOR ASSLY-LH	1	
22	6B001821	DRIVER SEAT ASSLY COMPLETE - APE CITY	1	CNG/LPG
22	6B000811	DRIVER SEAT ASSLY COMPLETE - APE CITY	1	PTL
23	31088	HEX HD SCREW M6 X 16 CL 8.8 (811061623)	22	
24	6B000808	DRIVER SEAT PIPE S/A	1	Under Development
25	B074594	DRIVER BACK REST ASSY	1	
26	16405	SPRING WASHER M5	4	
27	16603	PLAIN WASHER (METALLIC)	4	
28	20105	PLAIN NUT M5	4	
29	B078925	PIAGGIO STICKER (VISUAL BARRIER	1	
30	B078924	APE CITY STICKER (TAILGATE)	1	
31	B003652	PLATE PETROL	1	
32	B041584	STICKER FOR LPG	1	
33	B041583	STICKER FOR CNG	1	
34	B076069	LATCH-TAIL GATE	1	
35	3056	PLAIN WASHER M6 OD12	2	
36	2388	WELD NUT M8	2	Not Servicable
37	B076056ED	HINGE ASSLY LH, CROSS MEMBER	1	
38	B076057CED	HINGE ASSLY RH, CROSS MEMBER	1	
39	31116	HEX HD. SCREW M8X16	2	
40	3058	PLAIN WASHER 15X8.4X1.5	2	

52

Print Date: 05-Oct-2022

PLATE-22

PASS. BODY WITH DOORS &HOOD FRAME & SOFT TOP

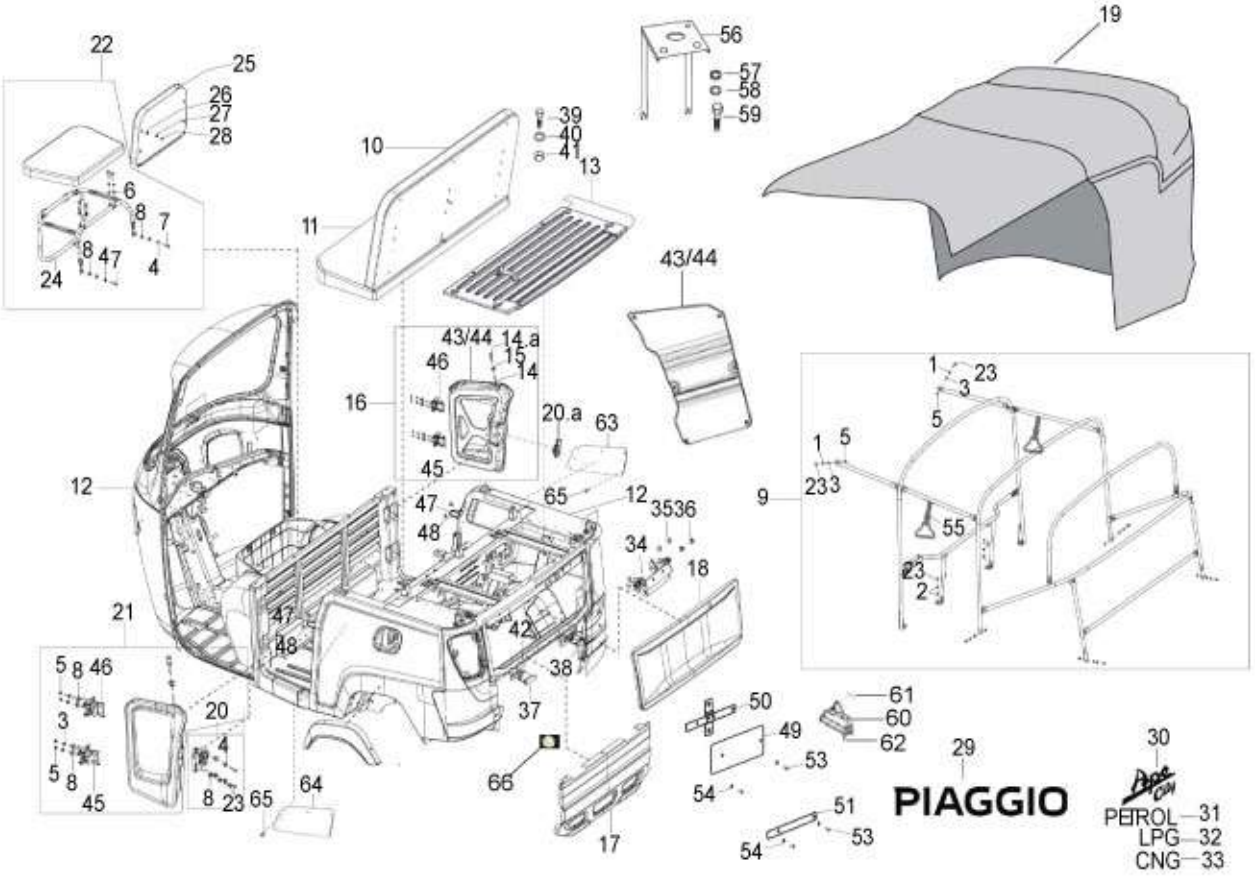
22
25
26
27
28
6
8
7
8
47
4
24
10
11
39
40
41
13
56
57
58
59
19
43/44
43/44
14.a
15
14
46
16
20.a
63
45
12
47
48
65
12
35
36
34
18
9
1
23
3
5
1
5
23
3
55
23
2
21
47
48
42
38
5
8
46
3
20
37
50
49
53
61
60
62
29
30
5
8
45
4
8
23
65
64
66
54
51
53
54
17
PIAGGIO
PETROL 31
LPG 32
CNG 33

53

Print Date: 05-Oct-2022

PLATE-22

PASS. BODY WITH DOORS &HOOD FRAME & SOFT TOP

Fig. No.	Part No.	Description	Qty	Remarks
41	20108	HEX NUT M8	2	
42	B075505ED	C/S MEMBER S/A, BODY UPPER, REAR	1	
43	6B001388	PLASTIC PART INNER LH	1	
44	6B001389	PLASTIC PART INNER RH	1	
45	6B001455	HINGE ASSLY-PASS DOOR LOWER	2	
46	6B001520	DOOR HINGE ASSLY UPPER	2	
47	6B001517	STRIKER ASSLY	2	
48	6B001654	COUNTERSUNK SCREW M8 X 12	4	
49	6B001129	REGISTRATION NUMBER PLATE(HSRP)	2	
50	6B001137	BRACKET ASSLY-REAR HSRP MTG	2	
51	6B001140	BRACKET ASSLY FRONT HSRP MTG	1	
52	6D000374	PIGTAIL ,LICENCE PLATE LAMP	1	NI
53	30074	HEX HEAD BOLT M8 X 40 CL 8.8	2	
54	3058	PLAIN WASHER 15X8.4X1.5	2	
55	940090	HANGING GRIP HANDLE(COMMON)	2	
56	B002334	FARE METER MTG. BKT.	1	
57	016408	SPRING WASHER	4	
58	3058	PLAIN WASHER 15X8.4X1.5	4	
59	31118	SCREW M8X20	4	
60	639088	TAIL LAMP	1	
61	3054	PLAIN WASHER	3	
62	157716	SCREW ANCHORE	3	
63	B041118	TRIM PAD SIDE PANEL	1	
64	B041217	TRIM PAD SIDE PANEL LH	1	
65	660168	PAN SELF TP. SCREW 10 SGX13AB	12	
66	6632187Z01	CUSHION, RUBBER	2	
67	B076308	RUBBER SPACER (LIGHT RAGISTRATION LAMP)	2	NI(SPACER BETWEEN HSRP PLATE AND BODY)
68	6B001170	SOFT TOP REINFORCEMENT PLASTIC	2	GREEN COLOUR
69	6B002781	GROMMET FOR TAIL GATE LOCK	1	NI

54

Print Date: 05-Oct-2022

PLATE-23
ENGINE MOUNTING

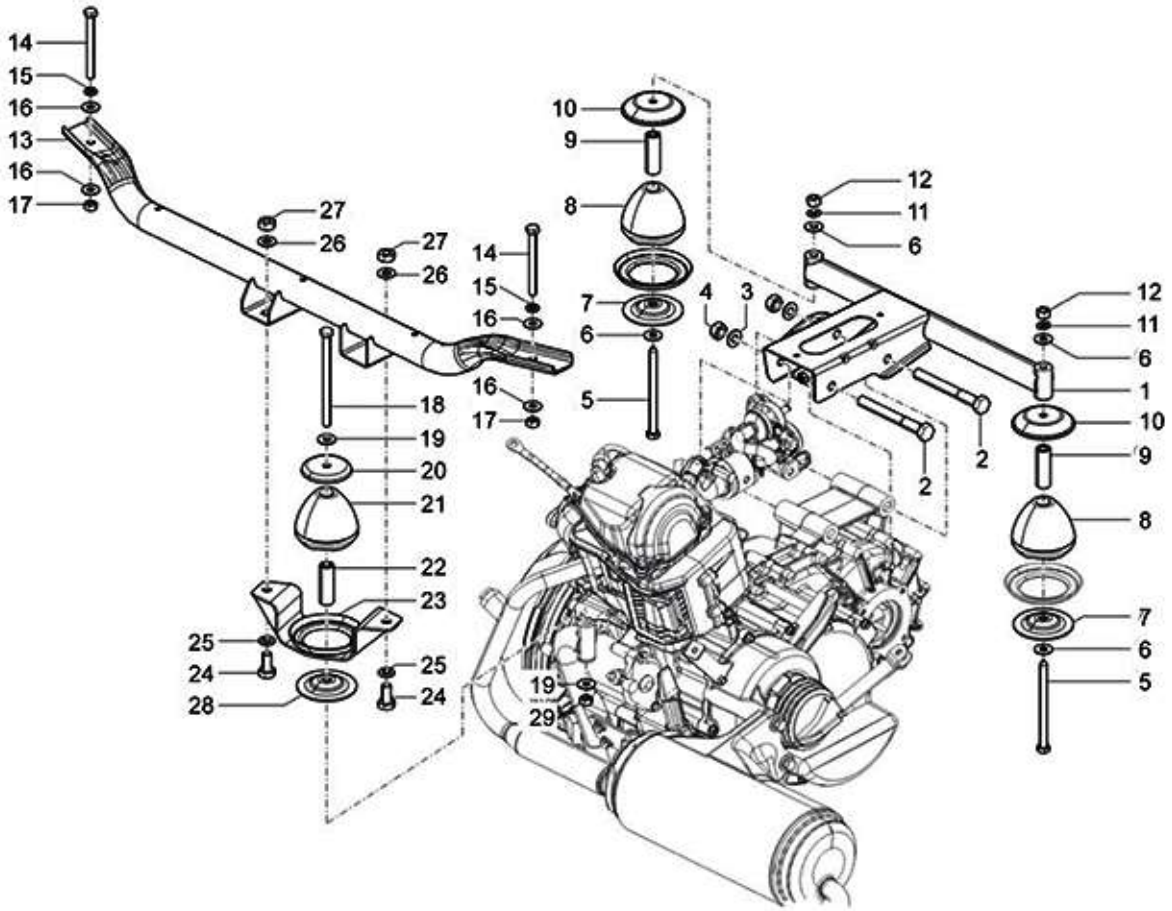
14
15
16
13
16
17
27
26
27
26
14
15
16
16
17
18
19
20
21
22
23
25
24
28
25
24
10
9
8
7
6
5
4
3
12
11
6
12
11
6
1
10
9
8
7
6
5
2
2
19
29

55

Print Date: 05-Oct-2022

PLATE-23
ENGINE MOUNTING

Fig. No.	Part No.	Description	Qty	Remarks
1	B075459	FRT CROSS MEMBER ASSY. ENG. MTG.	1	
2	568689	HEX HEAD BOLT M10X100	2	
3	286328	PLAIN WASHER 20X10.2X2	2	
4	231370	SELF BREAKING NUT M10	2	
5	604948	HEX.HDD BOLT M8 X 110 WITH POINTING	2	
6	2383	PLAIN WASHER M20X8.5X2	4	
7	569244	PLATE	2	
8	265091	DUMPER ENGINE MTG.	2	
9	569241	SPACER	2	
10	569377	PLATE	2	
11	016408	SPRING WASHER	2	
12	15335	HEX HD NUT M8	2	
13	B075595	CROSS MEMBER ENGINE MTG REAR	1	
14	B076205	HEAD BOLT (M8 X 85)	2	
15	016408	SPRING WASHER	2	
16	2383	PLAIN WASHER M20X8.5X2	4	
17	20108	HEX NUT M8	2	
18	272178	HEX. HDD BOLT M8 X 122 CL 10.9	1	
19	2383	PLAIN WASHER M20X8.5X2	2	
20	569375	PLATE	1	
21	265091	DUMPER ENGINE MTG.	1	
22	569241	SPACER	1	
23	B003286	REAR AVM SUPPORT BKT. ASSY.	1	
24	31154	HEX HDD SCREW M10X22 CL 8.8	2	
25	16410	SPRING WASHER	2	
26	286328	PLAIN WASHER 20X10.2X2	2	
27	20110	HEX NUT M10	2	
28	569244	PLATE	1	
29	20108	HEX NUT M8	1	

56

Print Date: 05-Oct-2022

PLATE-24

WINDSHIELD, GLASS ,PACKING & MIRROR

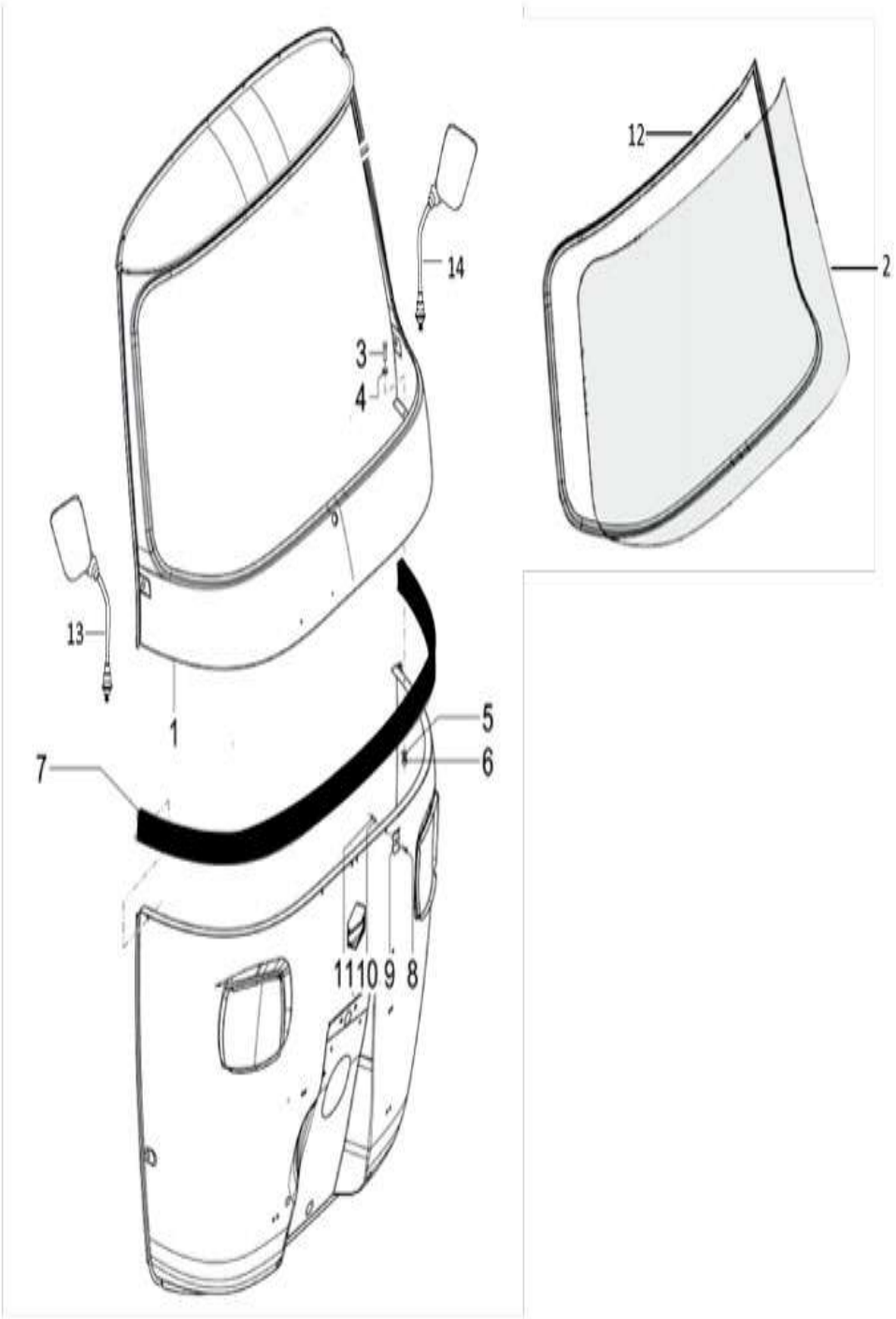
12
2
14
3
4
13
1
5
6
7
11
10
9
8

57

Print Date: 05-Oct-2022

PLATE-24

WINDSHIELD, GLASS ,PACKING & MIRROR

Fig. No.	Part No.	Description	Qty	Remarks
1	B073602ED	WINDSCREEN FRAME (COMPLETE)	1	
2	B073601	LAMINATED WINSHIELD GLASS	1	
3	30242	SLOT CH. HD. SCREW	10	
4	16405	SPRING WASHER M5	10	
5	12546	PLAIN WASHER / MULTI TOOTH LOCK WASHER M5	10	
6	20105	PLAIN NUT M5	10	
7	B024474	BEADDING LINING	1	
8	15911	PAN SELF TAP SCREW 8SG X 16 AB	5	
9	190462	PLATE ASSY.	5	
10	3054	PLAIN WASHER	5	
11	20104	HEX NUT M4	5	
12	B073626	WINDSHIELD PACKING	1	
13	6B001152R	REAR-VIEW MIRROR ASSLY RH	1	
14	6B001153R	REAR-VIEW MIRROR ASSLY LH	1	

58

Print Date: 05-Oct-2022

PLATE-25
MUDGUARD

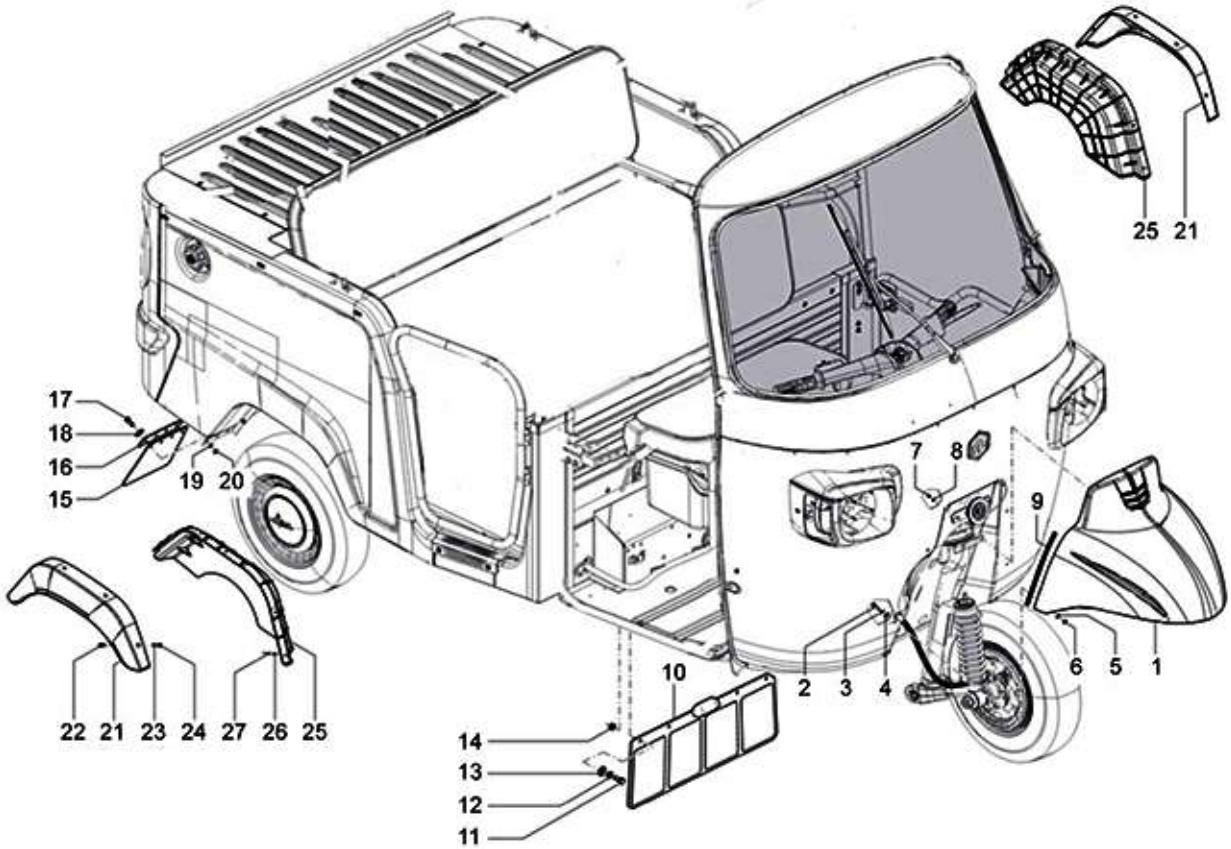
25 21
17
18
16
15
19 20
7 8
9
22 21 23 24 27 26 25
10
2 3 4
6 5 1
14
13
12
11

59

Print Date: 05-Oct-2022

PLATE-25
MUDGUARD

Fig. No.	Part No.	Description	Qty	Remarks
1	B073882BW	FRONT MUDGUARD - PAINTED-BW	1	
1	B073882BY	FRONT MUDGUARD_UPGRD_PAINTED_BY	1	
1	B073882CB	FRONT MUDGUARD - PAINTED -CB	1	
1	B073882EG	FRONT MUDGUARD - PAINTED - EG	1	
1	B073882GY	FRONT MUDGUARD - PAINTED - GY	1	
1	B073882NB	FRONT MUDGUARD - PAINTED - NB	1	
2	31089	HEX HEAD SCREW M6X18 CL 8.8	4	
3	016406	SPRING WASHER	4	
4	3056	PLAIN WASHER M6 OD12	4	
5	013880	PLAIN WASHER	4	
6	20106	HEX NUT M6	4	
7	15900	HEAD LAMP SECURING SCREW/PAN SELF TAP SCREW	2	
8	3055	PLAIN WASHER M5	2	
9	B074063	GASKET FOR FRONT MUDGUARD	1	
10	B041054	MUD FLAP FRONT	1	
11	31088	HEX HD SCREW M6 X 16 CL 8.8 (811061623)	4	
12	016406	SPRING WASHER	4	
13	013880	PLAIN WASHER	4	
14	20106	HEX NUT M6	4	
15	B001789	MUDFLAP MUDGAURD REAR	1	
16	B001788	CLAMP MUDFLAP REAR	1	
17	31057	HEX HEAD SCREW M5 X 14 CL 8.8	8	
18	013880	PLAIN WASHER	8	
19	16405	SPRING WASHER M5	8	
20	20105	PLAIN NUT M5	8	
21	B073853	RR MUDGUARD RH	1	
21	B073852	MUDGUARD REAR LH	1	
22	15900	HEAD LAMP SECURING SCREW/PAN SELF TAP SCREW	8	
23	16603	PLAIN WASHER (METALLIC)	8	
24	20105	PLAIN NUT M5	8	
25	B041397	COVER INNER MUDGAURD RH	1	
25	B041398	COVER INNER MUDGAURD LH	1	
26	16603	PLAIN WASHER (METALLIC)	10	
27	604603	RIVET	10	

60

Print Date: 05-Oct-2022

PLATE-26

FUEL TANK & FUEL LINE_PETROL

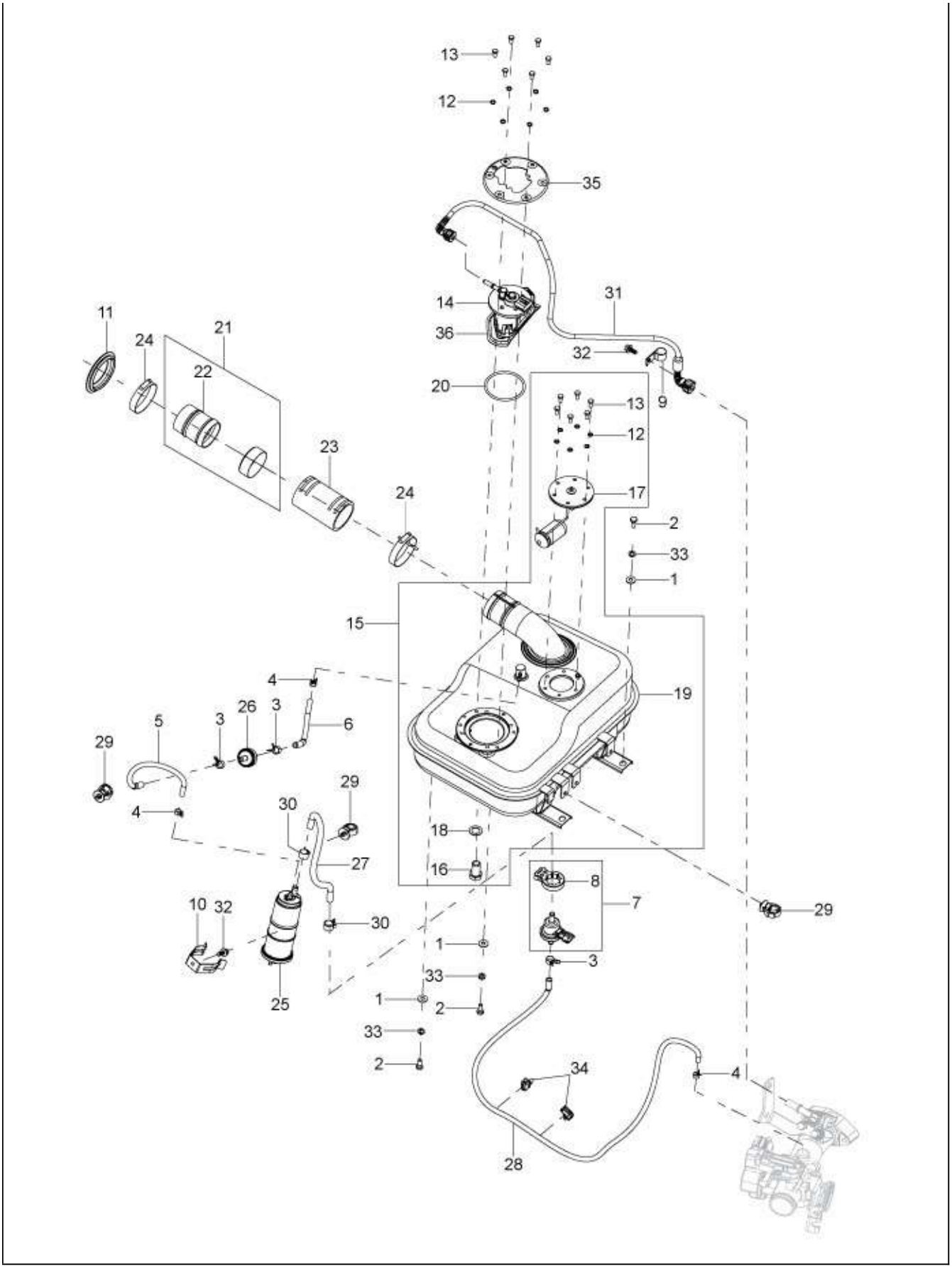
13
12
35
14
36
31
32
9
11
24
21
22
20
13
12
23
24
17
2
33
1
15
19
4
26
3
3
6
5
29
29
4
30
18
27
16
8
7
29
10
32
30
1
3
33
1
2
25
33
2
34
4
28

61

Print Date: 05-Oct-2022

PLATE-26

FUEL TANK & FUEL LINE_PETROL

Fig. No.	Part No.	Description	Qty	Remarks
1	013880	PLAIN WASHER	3	
2	31088	HEX HD SCREW M6 X 16 CL 8.8 (811061623)	3	
3	662571	HOSE CLAMP	3	
4	B041798	SPRING BAND HOSE CLAMP DIA 8.6	3	
5	B075336	FUEL PIPE -TANK TO FILTER-PTL	1	
6	B075337	FUEL PIPE-TANK TO SMALL FILTER-CITY PTL	1	
7	B018242	VALVE ASSY	1	
8	B018241	VALVE RUBBER RETAINING RING	1	Not Serviceable
9	6A000477	P-CLAMP, FUEL PIPE	1	
10	6A000836	SNAP FIT BKT., FILTER MTG (ARAYMOND)	1	
11	644299	COLLAR	1	
12	16405	SPRING WASHER M5	6	
13	31056	HEX HEAD SCREW M5 X 12 CL. 8.8	6	
14	1D002701	FUEL PUMP	1	
15	B079384	FUEL TANK ASSEMBLY WITH TANK UNIT	1	
16	B074723	DRAIN PLUG BOLT (M14X1.5X27)	1	
17	6D001084	TANK UNIT	1	
18	224644	COPPER WASHER M10	1	
19	B079384	FUEL TANK ASSEMBLY WITH TANK UNIT	1	
20	1B002953	FUEL PUMP GASKET	1	
21	6A000896	ASSY. FUEL FILLER NECK	1	
22	B003116	TUBE FUEL TANK FILLER-ALL	1	Not Serviceable
23	B003114	HOSE FUEL TANK	1	
24	B041853	HOSE CLIP (SIZE : 65A)	2	
25	1B002848	CANISTER	1	
26	AP8104614	VALVE	1	
27	6A000438	HOSE, CANISTER TO PCV IN	1	
28	6A000439	HOSE, PCV TO INTAKE MANIFOLD	1	
29	B076007	PIPE CLIP 1 WAY	3	
30	632109	HOSE CLAMP BRAKE PIPE	2	
31	6A000955	ASSY. FUEL FEED PIPE (TANK TO ENGINE)	1	
32	D9166140616	BOLT, W/WASHER	2	
33	16406	SPRING WASHER M6 OD12	4	
34	216369	CLAMP	2	
35	6A000816	LOCKING PLATE FOR PUMP MOUNTING	1	

62

Print Date: 05-Oct-2022

PLATE-26

FUEL TANK & FUEL LINE_PETROL

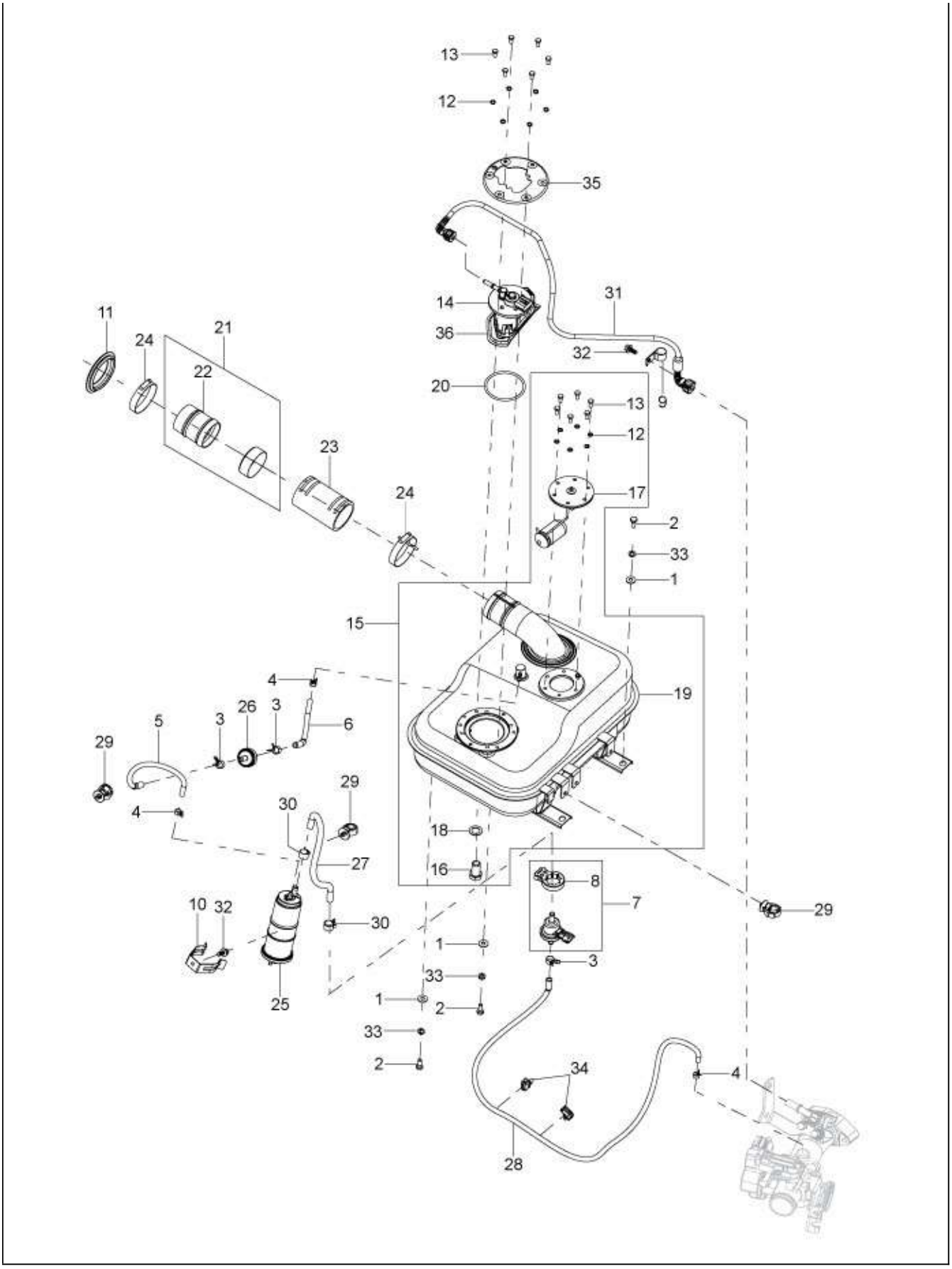
13
12
35
14
36
31
32
9
11
24
21
22
20
13
12
23
24
17
2
33
1
15
19
4
26
3
3
6
5
29
29
4
30
18
27
16
8
7
29
10
32
30
1
3
33
1
2
25
33
2
34
4
28

63

Print Date: 05-Oct-2022

PLATE-26

FUEL TANK & FUEL LINE_PETROL

Fig. No.	Part No.	Description	Qty	Remarks
35	1E002675	CAP ASSY, FUEL TANK	1	PTL
36	1D003477	FILTER	1	

64

Print Date: 05-Oct-2022

PLATE-27

FUEL TANK/FILTER/FUEL PIPES - GAS

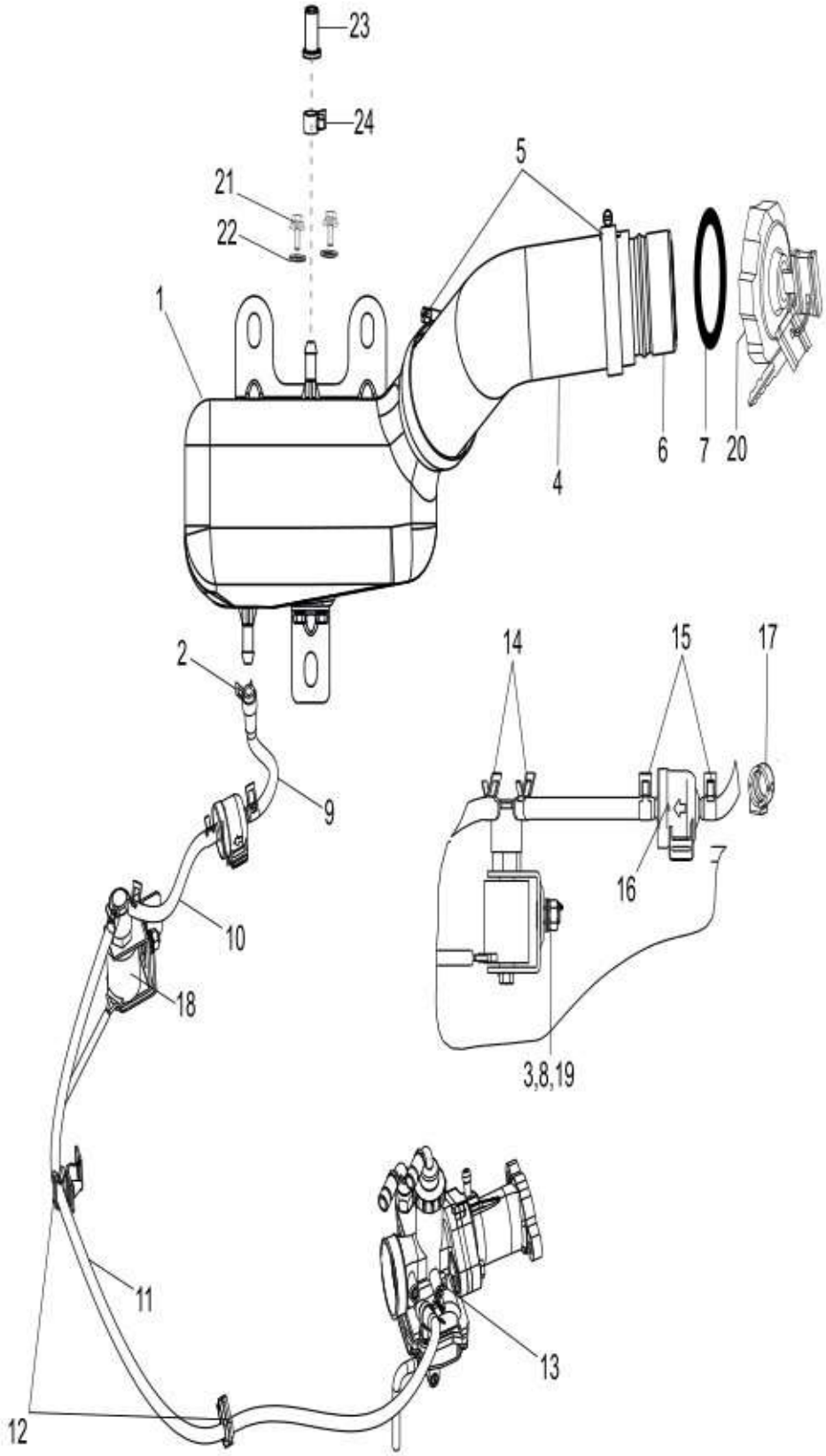
23
24
5
21
22
1
6
7
20
4
2
14
15
17
9
16
10
18
3,8,19
11
13
12

65

Print Date: 05-Oct-2022

PLATE-27

FUEL TANK/FILTER/FUEL PIPES - GAS

Fig. No.	Part No.	Description	Qty	Remarks
1	B042390	FUEL TANK ASSY. PLASTIC (LPG/CNG)	1	
2	B041798	SPRING BAND HOSE CLAMP DIA 8.6	1	
3	3056	PLAIN WASHER M6 OD12	2	
4	B042378	NECK HOSEHOSE FUEL TANK	1	
5	B041853	HOSE CLIP (SIZE : 65A)	2	
6	B003116	TUBE FUEL TANK FILLER-ALL	2	
7	644299	COLLAR	1	
8	016406	SPRING WASHER	2	
9	B075337	FUEL PIPE-TANK TO SMALL FILTER-CITY PTL	1	
10	B074962	FUEL PIPE- SMALL FILTER TO SOLENOID	1	
11	B075796	FUEL PIPE - FUEL FILTER TO CARBURATOR-CNG/LPG	1	
12	216369	CLAMP	1	
13	B041852	SPRING BAND HOSE CLIP (DIA. 9.4)	2	
14	B041798	SPRING BAND HOSE CLAMP DIA 8.6	2	
15	B003282	HOSE CLIP (DIA.7) (PETROL & CNG/LPG)	2	
16	B074593	COMPACT FUEL STRAINER (3 L/H)	1	
17	B075790	FUEL FILTER SUPPORT	1	
18	6A000500	PETROL SOLENOID WITH BKT.	1	
19	20106	HEX NUT M6	2	
20	B024168	P.T.CAP ASSLY WITH KEY	1	Gas
21	661925	PHILIP PAN HEAD SCREW (M5 X 0.8 X 1.6)	4	
22	3054	PLAIN WASHER	4	
23	B074963	PLUG-TANK RETURN NIPPLE	1	
24	B075707	SPRING BAND HOSE CLAMP (DIA 10	1	

66

Print Date: 05-Oct-2022

PLATE-28

CAB COMPONENTS_CARPETS & TOOL KIT

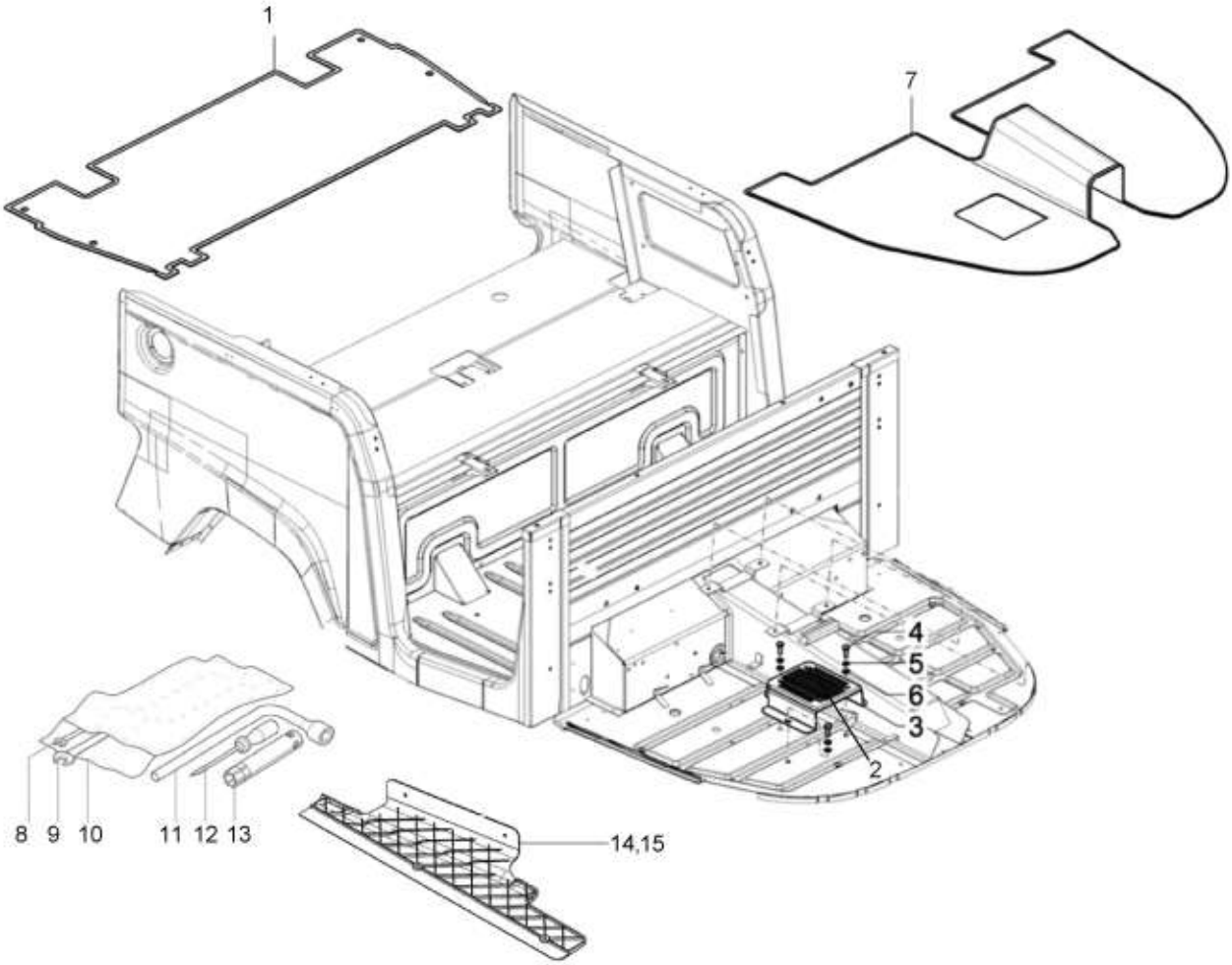
1
7
4
5
6
3
2
8
9
10
11
12
13
14,15

67

Print Date: 05-Oct-2022

PLATE-28

CAB COMPONENTS_CARPETS & TOOL KIT

Fig. No.	Part No.	Description	Qty	Remarks
1	6B001994	CARPET PASSENGER FOOT REST	1	Common
2	B074024	RUBBER MAT FOR FOOT REST	4	
3	B075267	FOOTREST ASSLY. COMPLETE	1	
4	31119	HEX HD SCREW M8 X 25	3	
5	016408	SPRING WASHER	3	
6	3058	PLAIN WASHER 15X8.4X1.5	3	
7	6B002003	CABIN CARPET -PTL	1	PTL
7	6B002002	CABIN CARPET - GAS	1	CNG
7	6B002002	CABIN CARPET - GAS	1	LPG
8	567454	DOUBLE END SPANNER7/8	1	
9	567456	DOUBLE END SPANNER 12/14	1	
10	B041876	TOOL BAG	1	
11	B076142	L TYPE SPANNER - A/F 16	1	
12	567458	SCREW DRIVER (-)&(+) 80	1	
13	B041787	SPARK PLUG SPANNER	1	
14	6B001995	FOOT STEP COVER RH	1	
15	6B001996	FOOT STEP COVER LH	1	

68

Print Date: 05-Oct-2022

PLATE-29

DASHBOARD ASSLY COMPLETE & LOCK SET

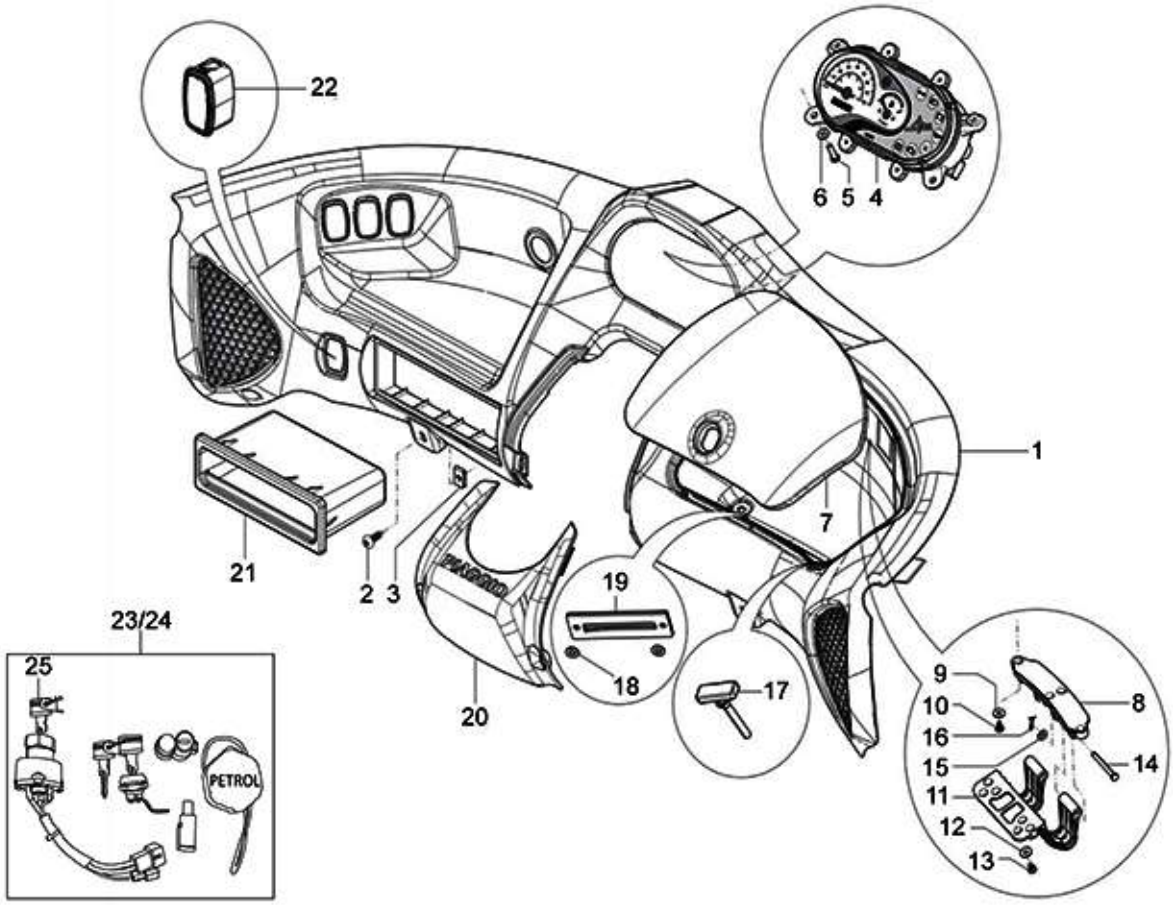
22
6 5 4
1
7
21
2 3
19
23/24
25
PETROL
18
20
17
9
10
16
15
11
12
13
8
14

69

Print Date: 05-Oct-2022

PLATE-29

DASHBOARD ASSLY COMPLETE & LOCK SET

Fig. No.	Part No.	Description	Qty	Remarks
1	6B003443	ASSLY DASHB WITH HINGE -CITY NXT+	1	PTL (Bare dashboard)
1	6B003870	ASSLY DASHBOARD WITH H/P (PALE BROWN)	1	CNG/LPG(Bare Dashboard)
1	NEW-1	DASHBOARD ASSLY. COMPLETE	1	PTL
1	NEW-2	DASHBOARD ASSY COMPLETE	1	CNG/LPG
2	660168	PAN SELF TP. SCREW 10 SGX13AB	7	
3	8080	SPRING PLATE	7	
4	6D000322	INST CLUSTER, APE CITY PETROL (BSVI)	1	PTL
4	6D000320	INST.CLUSTER_APE CITY (CNG) - BSVI	1	CNG
4	6D000389	INST. CLUSTER_APE CITY HT BSVI (LPG)	1	LPG
4	6D000793	INSTRUMENT CLUSTER	1	Mono Fuel (LPG)
5	661925	PHILIP PAN HEAD SCREW (M5 X 0.8 X 1.6)	4	
6	6078	PLAIN WASHER 12 X 5.2 X 1	4	
7	6B003026	GLOVEBOX COVER SUB ASSLY (PALE BROWN)	1	
8	B073813	HINGE MTG. BKT.	1	
9	16670	PLAIN WASHER 12X4.5X1	4	
10	NS	NOT SERVICEABLE	4	
11	B073814	HINGE	1	
12	16670	PLAIN WASHER 12X4.5X1	6	
13	B074261	PHIL RD HD SCREW M4	6	Under Development
14	B074262	PIN	2	
15	3055	PLAIN WASHER M5	2	
16	567920	SPLIT PIN	2	
17	B074275	RUBBER DAMPER	2	
18	3054	PLAIN WASHER	2	
19	643691	BOLT LOCK PLATE	1	
20	6B003028	STEERING COLUMN COVER	1	
21	6B003872	UTILITY BOX	1	
22	B075732	FUEL CHANGE OVER SWITCH	1	
23	6G000056	LOCK SET DLX LPG MONO FUEL	1	Mono Fuel (LPG)
23	6G000124	LOCK SET (CITY CNG & LPG BS6)	1	CNG/LPG
24	6G000057	LOCK SET WITH KEYS (CITY DLX- E4 PETROL)	1	PTL
25	B024532	KEY IGNITION SWITCH W/COUPLER (PAVNA)	1	
26	B042170	CAP - SIDE PANEL	1	Mono Fuel (LPG)

70

Print Date: 05-Oct-2022

PLATE-30

HEAD LAMP & BEZEL ASSY, LOGO & SUPPORT

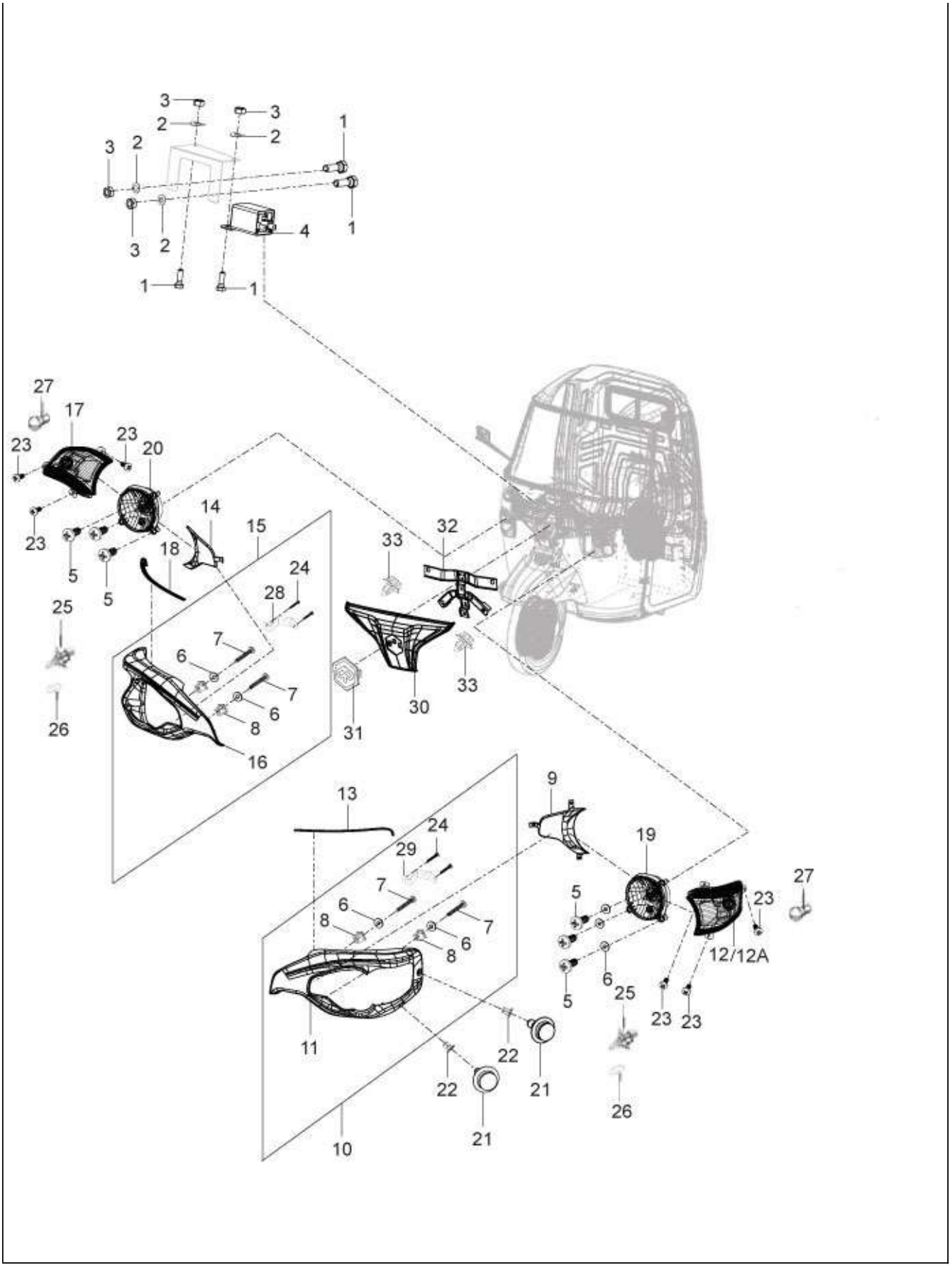
3
2
3
2
1
3
2
1
3
2
4
1
1
1
27
17
23
23
20
23
14
15
23
5
5
18
24
28
25
7
6
7
6
8
26
16
33
32
31
30
33
13
9
24
29
19
7
6
8
7
6
8
5
23
27
12/12A
6
5
25
23
23
11
22
21
22
21
26
10

71

Print Date: 05-Oct-2022

PLATE-30

HEAD LAMP & BEZEL ASSY, LOGO & SUPPORT

Fig. No.	Part No.	Description	Qty	Remarks
1	31058	HEX HEAD SCREW M5 X 16 CC8.8	4	
2	6965	SPRING WASHER DIA 5	4	
3	20105	PLAIN NUT M5	4	
4	6D000305	FLASHER RELAY (BG LI-IN)	1	
5	15900	HEAD LAMP SECURING SCREW/PAN SELF TAP SCREW	6	
6	16670	PLAIN WASHER 12X4.5X1	10	
7	18630	PAN SELF TAP SCREW 6SG X 25AB	4	
8	157716	SCREW ANCHORE	4	
9	6B003007	SIDE PROFILE LH	1	Painted
10	6B003144	HEADLAMP BEZEL ASSEMBLY LH	1	
11	6B003146	HEADLAMP BEZEL LH	1	
12	6D000145R	FRONT DIRECTION INDICATORS LH	1	
12A	B078274	BLINKER HOUSING (LH)-(HOUSING + GLASS)	1	
13	6B002757	HEADLAMP BEZEL BEADING	2	
14	6B003008	SIDE PROFILR RH	1	Painted
15	6B003148	HEAD LAMP BEZEL ASSLY. RH	1	
16	6B003150	HEAD LAMP BEZEL RH	1	
17	6D000146R	FRONT DIRECTION INDICATORS RH	1	
17A	B078272	BLINKER HOUSING (RH)-(HOUSING + GLASS)	1	
18	6B002757	HEADLAMP BEZEL BEADING	1	
19	6D000143R	HEAD LAMP ASSLY LH - NUOVO	1	
20	6D000144R	HEAD LAMP ASSLY - RH (NUOVO)	1	
21	B076605	PIN	4	
22	B076606	GROMMET	4	
23	661925	PHILIP PAN HEAD SCREW (M5 X 0.8 X 1.6)	6	
24	D9004159230	SCREW, W / WASHER	6	
25	B078286R	HS1_BULB (12 V _35/35W	2	
26	567593	BULB 12V 5W / LAMP 4W	2	
27	925581	INDICATOR LIGHT BULB 12V 21W AMBER COLOUR	2	
28	6B002792	HEAD LAMP BEZEL MTG BRACKET	1	
29	6B002796	HEAD LAMP BEZEL MTG BRACKET	1	
30	6B003006	LOGO SUPPORT- SILVER	1	Painted
31	B076120	HEXAGONAL EMBLEM	1	
32	6B002586	LOGO SUPPORT BRACKET	1	
33	6B002827	LOGO SUPPORT MTG. CLIP	2	

72

Print Date: 05-Oct-2022

PLATE-31
HANDLEBARS

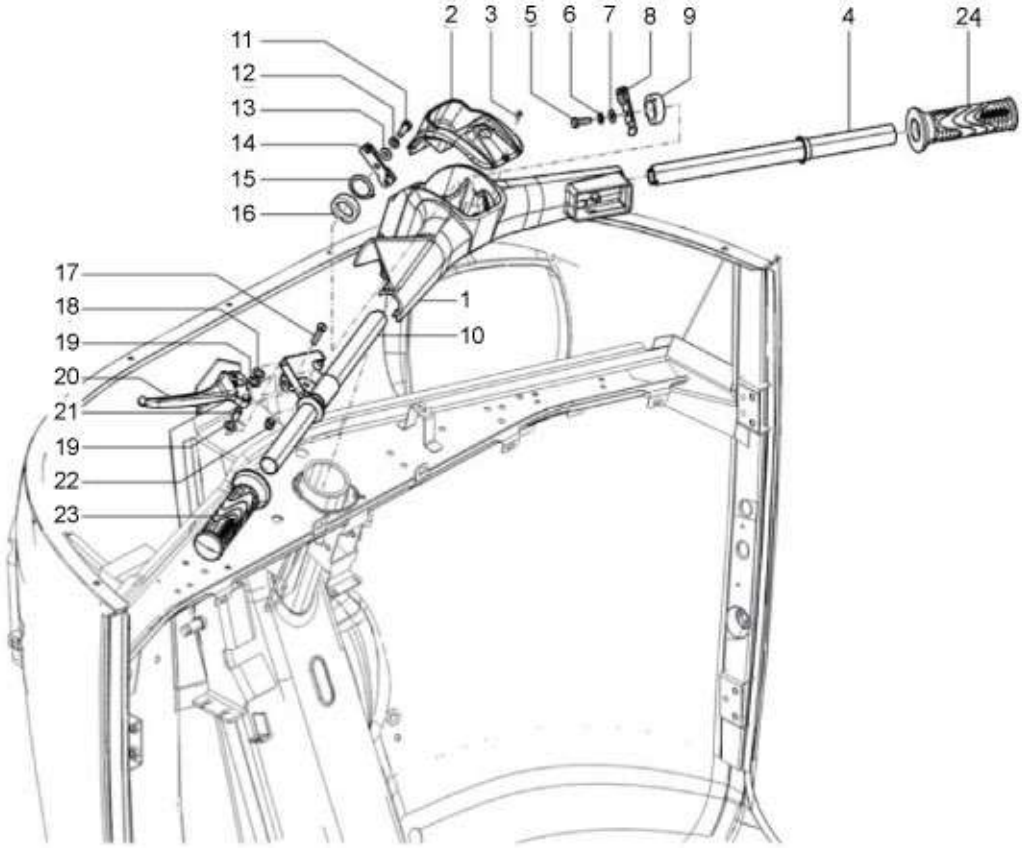
2
3
5
6
7
8
9
4
24
11
12
13
14
15
16
17
18
19
20
21
19
22
23
1
10

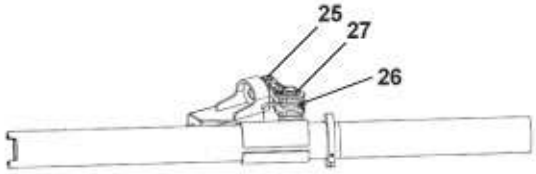
25
27
26

73

Print Date: 05-Oct-2022

PLATE-31
HANDLEBARS

Fig. No.	Part No.	Description	Qty	Remarks
1	B075687ED	HANDLE BAR BODY-ED	1	
2	B073817	COVER	1	
3	632158	CSK HEAD SCREW	1	
4	587902	ACCELERATOR TUBE ASSY.	1	
5	31089	HEX HEAD SCREW M6X18 CL 8.8	1	
6	016406	SPRING WASHER	1	
7	16626	PLAIN WASHER (18X10.5X2)	1	
8	B079248	ACCELERATOR TUBE SUPPORT BKT RH	1	
9	587904	SINTERED WASHER HANDLE BAR (41769)	1	
10	6A000197	TUBE SUB ASSY WITH PARTS MODI	1	
11	31089	HEX HEAD SCREW M6X18 CL 8.8	1	
12	016406	SPRING WASHER	1	
13	16626	PLAIN WASHER (18X10.5X2)	1	
14	109775	GEAR CONTROL LEVER S/A	1	
15	60565	SPRING WASHER	1	
16	109404	WASHER OF RABBET(41737)	1	
17	632158	CSK HEAD SCREW	1	
18	16319	BENT SPRING WASHER	1	
19	16620	PLAIN WASHER	2	
20	6A001637	LEVER, CLUTCH CONTROL	1	
21	125181	SPACER	1	
22	12138	NYLOCK NUT M6	1	
23	B073848	HANDLE BAR GRIP - LH	1	
24	B073849	HANDLE BAR GRIP - RH	1	
25	1E002771	LEVER, CLUTCH SWITCH	1	
26	1E002772	SPRING TORSION	1	
27	6A000209	CIRCLIP FOR SHAFT ID 9.3	1	Under Development

74

Print Date: 05-Oct-2022

PLATE-32

FORK/STEERING TUBE - STEERING BEARING UNIT

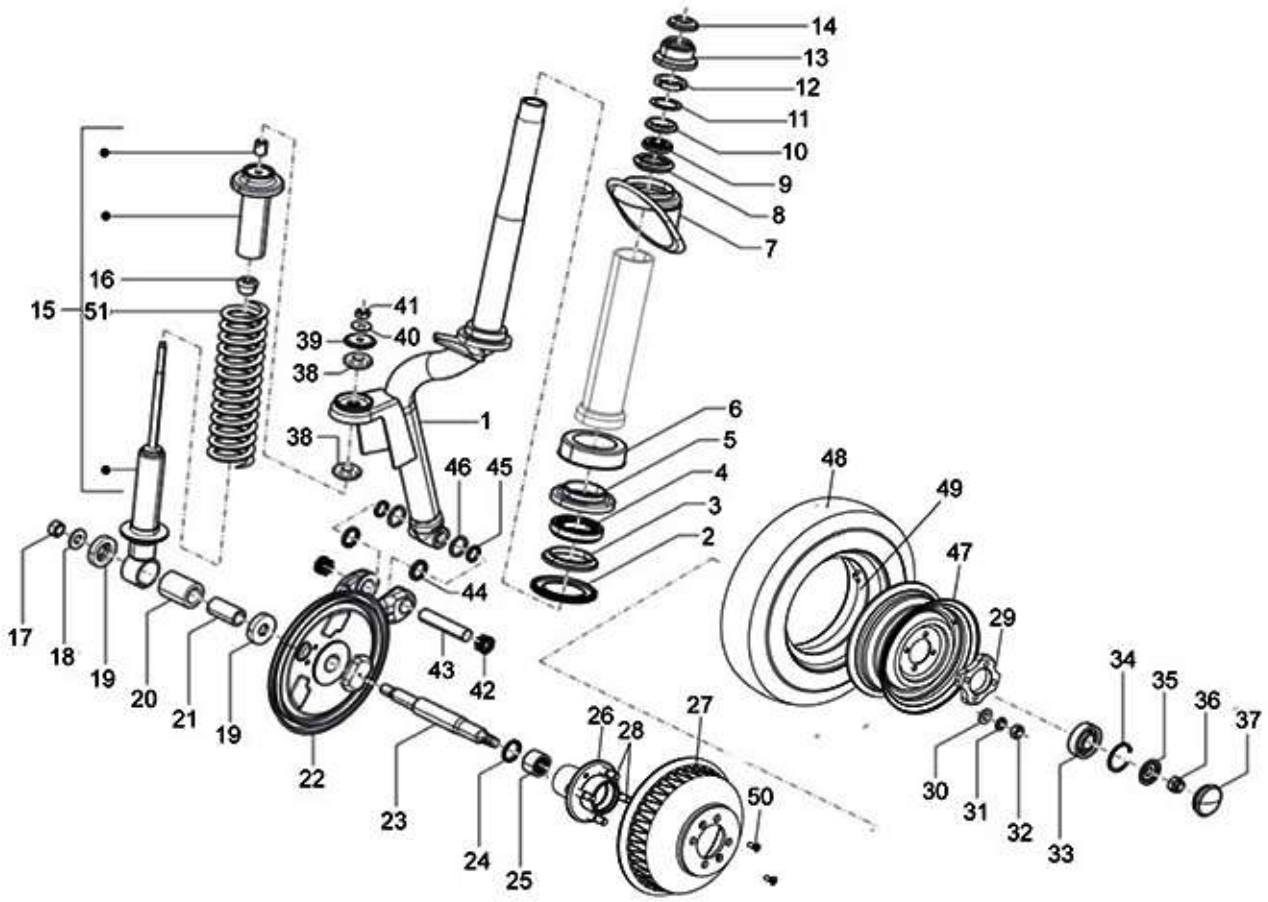
14
13
12
11
10
9
8
7
16
15
51
41
39
40
38
1
38
6
5
4
3
2
46
45
48
49
47
29
44
17
18
19
20
21
19
43
42
22
23
24
25
26
28
27
50
30
31
32
33
34
35
36
37

75

Print Date: 05-Oct-2022

PLATE-32

FORK/STEERING TUBE - STEERING BEARING UNIT

Fig. No.	Part No.	Description	Qty	Remarks
1	6C000471SP	FRONT SUSPENSION, ASSY_SPD	1	ASSY.INC. SUS., BACK PLATE ASSY &BRK DRUM&SUS.
1	6C000465SP	STEERING COLUMN WITH SUSP ARM	1	ASSY.INC. SUS., BACK PLATE ASSY
1	B075694	STEERING COLUMN WITH IP	1	
2	109066	WASHER WITH PROTECTION FOR BEARING	1	
3	567993	BEARING RACE LOWER BOTTOM	1	
4	6C000191	LOWER BALL CAGE (VE)	1	
5	567992	BEARING RACE LOWER TOP	1	
6	109064	DUST COVER	1	
7	109265	SPLASH GUARD DUST COVER	1	
8	567990	BEARING RACE UPPER BOTTOM	1	
9	6C000190	UPPER BALL CAGE (VE)	1	
10	567991	BEARING RACE UPPER TOP	1	
11	108873	STOP WASHER FOR HOLDING	1	
12	108874	SECURING RING NUT	1	
13	604758	PROTECTION	1	
14	604759	RUBBER CAP STEERING COLUMN (N.I.)	1	
15	B073690	FRONT SHOCK ABSORBER	1	
16	75708	SILENT BLOCK	1	
17	568095	NYLOCK NUT	1	
18	87067	PLAIN WASHER 30.5X14.3X2	1	
19	87067	PLAIN WASHER 30.5X14.3X2	2	
20	566545	RUBBER BUSH (FRT SHOCK ABSORBER) - MODIFIED	1	
21	109117	RUBBER BUSH (FRT SHOCK ABSORBER) / RING	1	
22	6C000272	FRONT BRAKE ASSEMBLY	1	
23	643772R	FRONT WHEEL AXLE	1	
24	196302	OIL SEAL	1	
25	125289	NEEDLE BEARING, CRANKASE, FRONT WHEEL	1	
26	B077465	FRONT HUB S/A	1	
27	B077245	BRAKE DRUM (CAST IRON)	1	
28	B001301	BOLT FRONT HUB.	4	
29	B077461	SPACER DISC FRONT WHEEL MTG (ALUMIN.)	1	
30	B008915	PLAIN WASHER 16.6X10.2X1	4	
31	16410	SPRING WASHER	4	
32	20110	HEX NUT M10	4	
33	30209R	BALL BEARING FRONT WHEEL HUB	1	

76

Print Date: 05-Oct-2022

PLATE-32

FORK/STEERING TUBE - STEERING BEARING UNIT

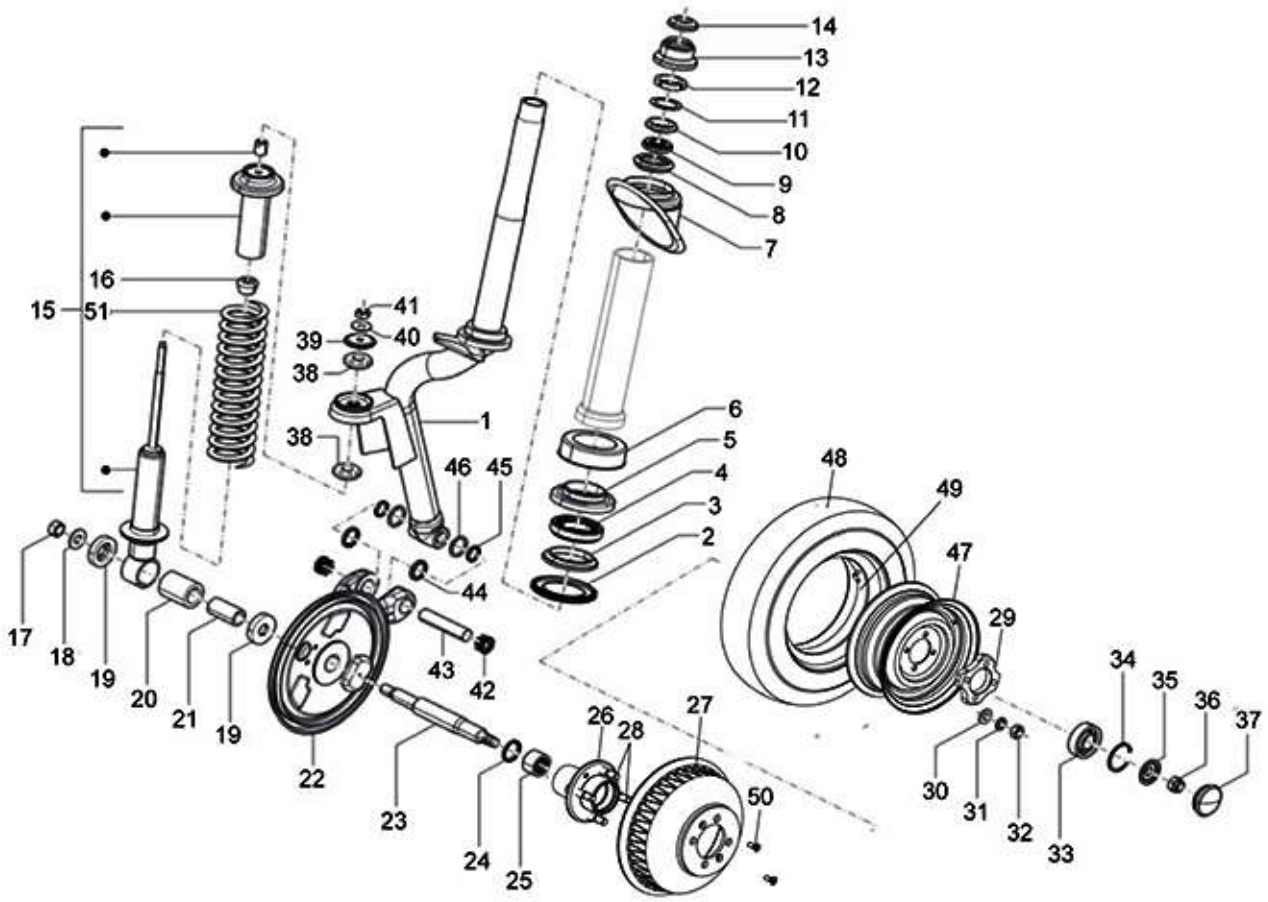
14
13
12
11
10
9
8
7
16
15
51
41
39
40
38
1
38
6
5
4
3
2
46
45
48
49
47
29
44
17
18
19
20
21
19
43
42
22
23
24
25
26
28
27
50
30
31
32
33
34
35
36
37

77

Print Date: 05-Oct-2022

PLATE-32

FORK/STEERING TUBE - STEERING BEARING UNIT

Fig. No.	Part No.	Description	Qty	Remarks
34	567473	CIRCLIP DIA. 42 INT. (841004203)	1	
35	180431	COIN WASHER	1	
36	74521	NUT M14 X 1.5	1	
37	107871	CAP	1	
38	74414	RUBBER BUSH/BUFFER FOR COUPLING SHOCK ABSORBE	2	
39	6066	PL WASHER 10.5X38X9	1	
40	16410	SPRING WASHER	1	
41	20110	HEX NUT M10	1	
42	107718	ROLLER BUSH	2	
43	137235	STEERING PIN	1	
44	150579	RING FOR HOLDING TYPE J F101 17A	2	
45	8771	OIL SEAL (18-24-4)	2	
46	6733	O RING	2	
47	6C000430	WHEEL RIM ASSY	1	
48	B001315	TYRE (4.0 X 8,4 PR)	3	
49	B001316	INNER TUBE FOR TYRE 4.0 X 8 INCH	3	
50	812061656	CSK PHILIPS HEAD SCREW M6 X 16	2	
51	940066	SPRING SHOCK ABSORBER-UG / RING	1	
52	KIT96033R	MODIFIED BALL KIT FOR 3WH (WHITE)	1	NI
53	KIT95021R	STEERING CONE SET (UPPER)	1	NI
54	KIT95022R	STEERING CONE SET (LOWER)	1	NI
55	KIT96016R	KIT OF STEERING CONE & BALL KIT	1	NI
56	KIT940003R	STEERING PIN KIT WITH O RING	1	NI

78

Print Date: 05-Oct-2022

PLATE-33

REAR SUSPENSION - SHOCK ABSORBER/S & ENGINE SUPPORT

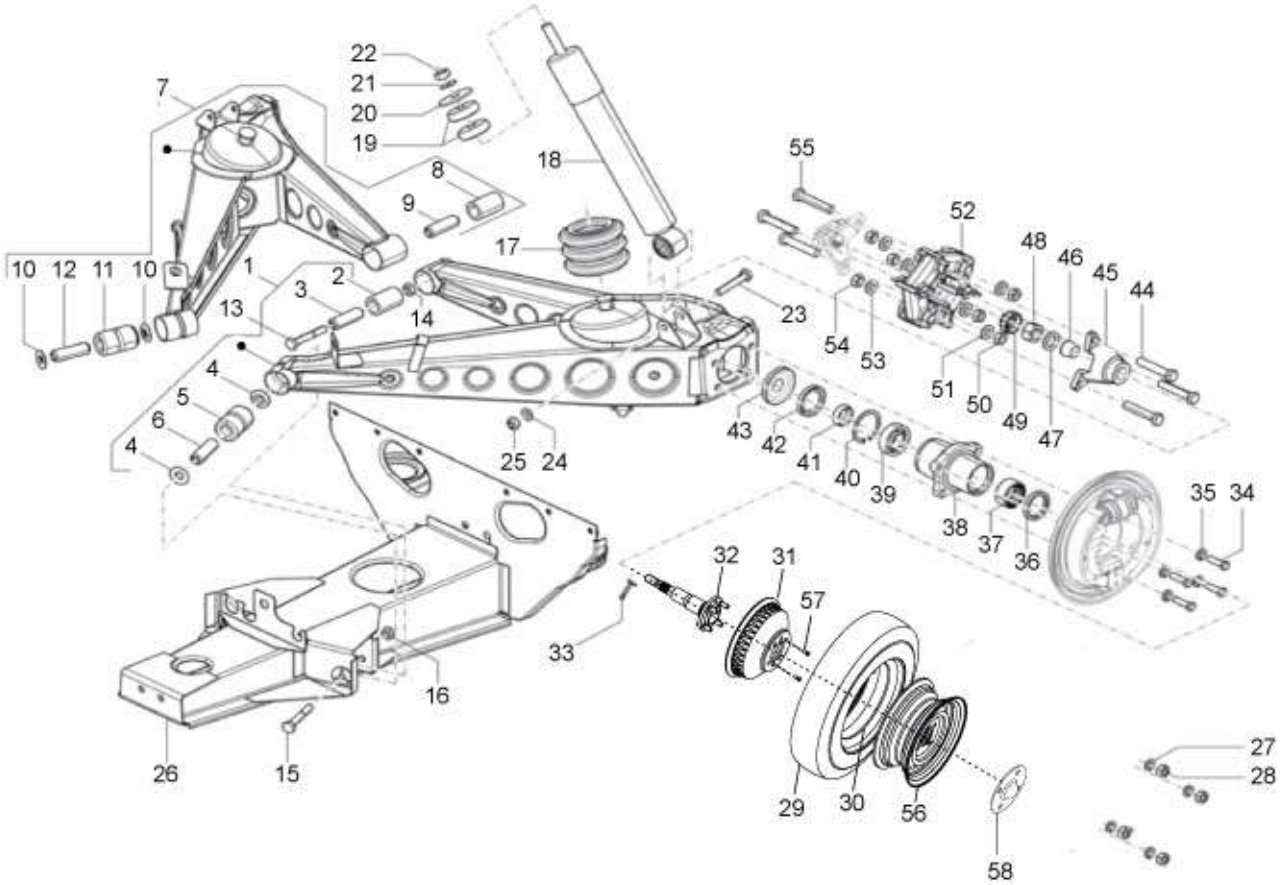
22
21
20
19
7
18
55
8
9
52
17
48
46
45
44
10
12
11
10
1
2
3
13
14
23
54
53
51
50
49
47
4
5
6
4
25
24
43
42
41
40
39
38
37
36
35
34
32
31
57
33
16
26
15
27
28
29
30
56
58

79

Print Date: 05-Oct-2022

PLATE-33

REAR SUSPENSION - SHOCK ABSORBER/S & ENGINE SUPPORT

Fig. No.	Part No.	Description	Qty	Remarks
1	B075807	ARM SUB ASSY. LH - REAR SUSPENSION	1	
2	226662	RING FOR ELASTIC SUPPORT	1	
3	226661	INTERNAL BUSH	1	
4	661266	SHOULDER WASHER	2	
5	226596	BUSH FRONT RING FOR ELASTIC SUPPORT	1	
6	267065	SPACER FRONT	1	
7	B075808	ARM SUB ASSY. RH - REAR SUSPENSION	1	
8	226662	RING FOR ELASTIC SUPPORT	1	
9	226661	INTERNAL BUSH	1	
10	661266	SHOULDER WASHER	2	
11	226596	BUSH FRONT RING FOR ELASTIC SUPPORT	1	
12	267065	SPACER FRONT	1	
13	643741	HEX HDD BOLT M10 X 80 CL 12.9	2	
14	231370	SELF BREAKING NUT M10	2	
15	643741	HEX HDD BOLT M10 X 80 CL 12.9	2	
16	231370	SELF BREAKING NUT M10	2	
17	B076290	RUBBER BUMPER	2	
18	B076292	SHOCK ABSORBER REAR - BSIV	2	
19	157103	BUSH - SHOCK ABSORBER	2	
20	6066	PL WASHER 10.5X38X9	2	
21	16410	SPRING WASHER	2	
22	20110	HEX NUT M10	2	
23	267068	HEX HEAD BOLT M10 X 60 CC 10.9	2	
24	286328	PLAIN WASHER 20X10.2X2	2	
25	231370	SELF BREAKING NUT M10	2	
26	B075798	FRAME ASSY. SUSPENSION & ENGINE SUPPORT	1	
27	16410	SPRING WASHER	4	
28	20110	HEX NUT M10	4	
29	B001315	TYRE (4.0 X 8,4 PR)	3	
30	B001316	INNER TUBE FOR TYRE 4.0 X 8 INCH	3	
31	B077245	BRAKE DRUM (CAST IRON)	2	
32	B077458	REAR AXLE COMPLETE	2	
33	12790	SPLIT PIN	2	
34	6C000231	M8X1.25X35 HEX COMBI SCREW-12.9	8	
35	016408	SPRING WASHER	8	

80

Print Date: 05-Oct-2022

PLATE-33

REAR SUSPENSION - SHOCK ABSORBER/S & ENGINE SUPPORT

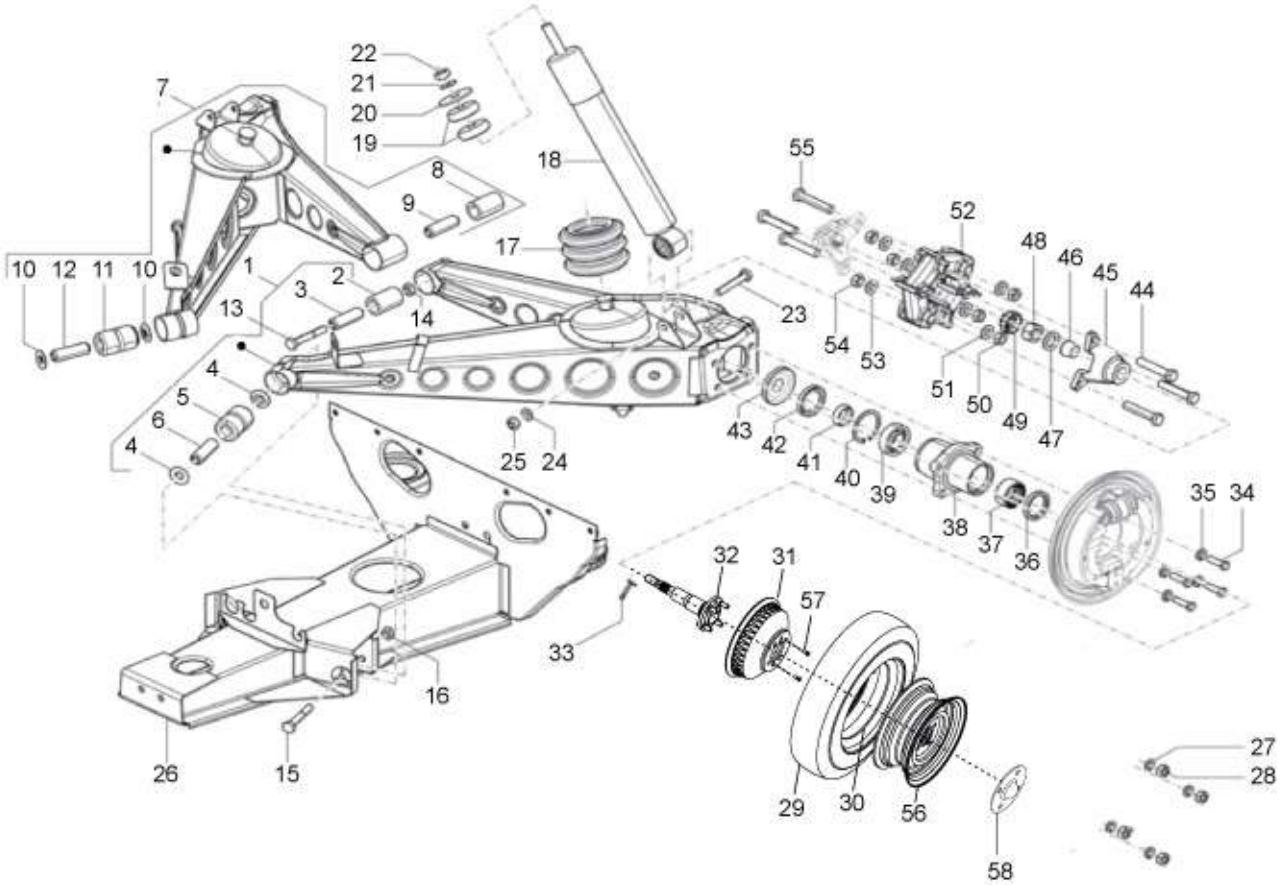
22
21
20
19
7
18
55
8
9
52
48
46
45
44
17
10 12 11 10
1
2
3
13
14
23
54
53
51
50
49
47
4
5
6
4
43
42
41
40
39
25 24
35 34
38
37
36
32
31
57
33
16
26
15
27
28
29
30
56
58

81

Print Date: 05-Oct-2022

PLATE-33

REAR SUSPENSION - SHOCK ABSORBER/S & ENGINE SUPPORT

Fig. No.	Part No.	Description	Qty	Remarks
36	20359	SEAL RING	2	
37	661282	NEEDLE ROLLER BEARING	2	
38	6C000530	REAR WHEEL HUB	2	
39	243303R	DEEP GROVE BALL BRG-RR WH AXLE	2	
40	6650	CIRCLIP DIA 50 (INT)	2	
41	661267	RING	2	
42	196302	OIL SEAL	2	
43	109892	PROTECTION CUP RR HUB	2	
44	15594	HEX HDD BOLT M10 X 35	6	
44.1	B024373	ALLEN BOLT M10X65 CL 10.9	6	
45	587617	ELASTIC JOINT CONNECTION HUB (WHL - SIDE)	2	
46	128633	CONE	2	
47	3068	PLAIN WASHER	2	
48	21118	HEX NUT M18 X 1.5P	2	
49	177559	CAP	2	
50	231370	SELF BREAKING NUT M10	3	
51	237246	SHIM WASHER 20X10.2X1	3	
52	604535	FLEXIBLE COUPLING	2	
53	237246	SHIM WASHER 20X10.2X1	3	
54	231370	SELF BREAKING NUT M10	3	
55	B024373	ALLEN BOLT M10X65 CL 10.9	3	
56	6C000430	WHEEL RIM ASSY	2	
57	812061656	CSK PHILIPS HEAD SCREW M6 X 16	2	
58	B077481	WHEEL CAP	1	

82

Print Date: 05-Oct-2022

PLATE-34
DRIVE SHAFT & BELLOW

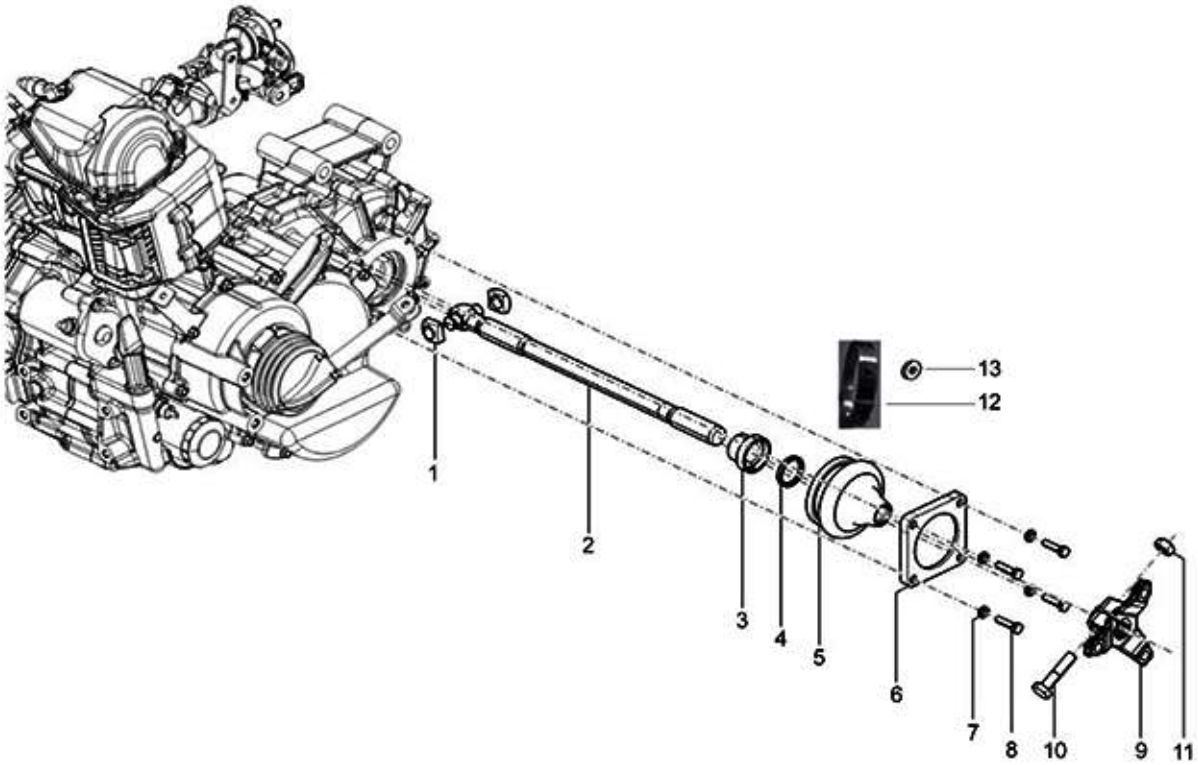
13
12
1
2
3
4
5
6
7
8
10
9
11

83

Print Date: 05-Oct-2022

PLATE-34

DRIVE SHAFT & BELLOW

Fig. No.	Part No.	Description	Qty	Remarks
1	112867R	SLIDER BLOCK PROP. SHAFT	4	
2	B023940	PROP. SHAFT S/A	2	
3	113278	BRACKET RETAINER RING (41736)	2	
4	6C000312R	SEAL RING	2	
5	6C000016	BELLOW	2	
6	111356	COVER	2	
7	016406	SPRING WASHER	8	
8	31092	HEX. HD SCREW M6X25	8	
9	111498	ELASTIC HUB	2	
10	B024614	HEX HEAD BOLT M10X45 CL 10.9	2	
11	231370	SELF BREAKING NUT M10	2	
12	6C000041	OTIKAR CLAMP FOR BELLOW	2	
13	3056	PLAIN WASHER M6 OD12	2	

84

Print Date: 05-Oct-2022

PLATE-35

BRAKE ASSEMBLY FRONT & REAR

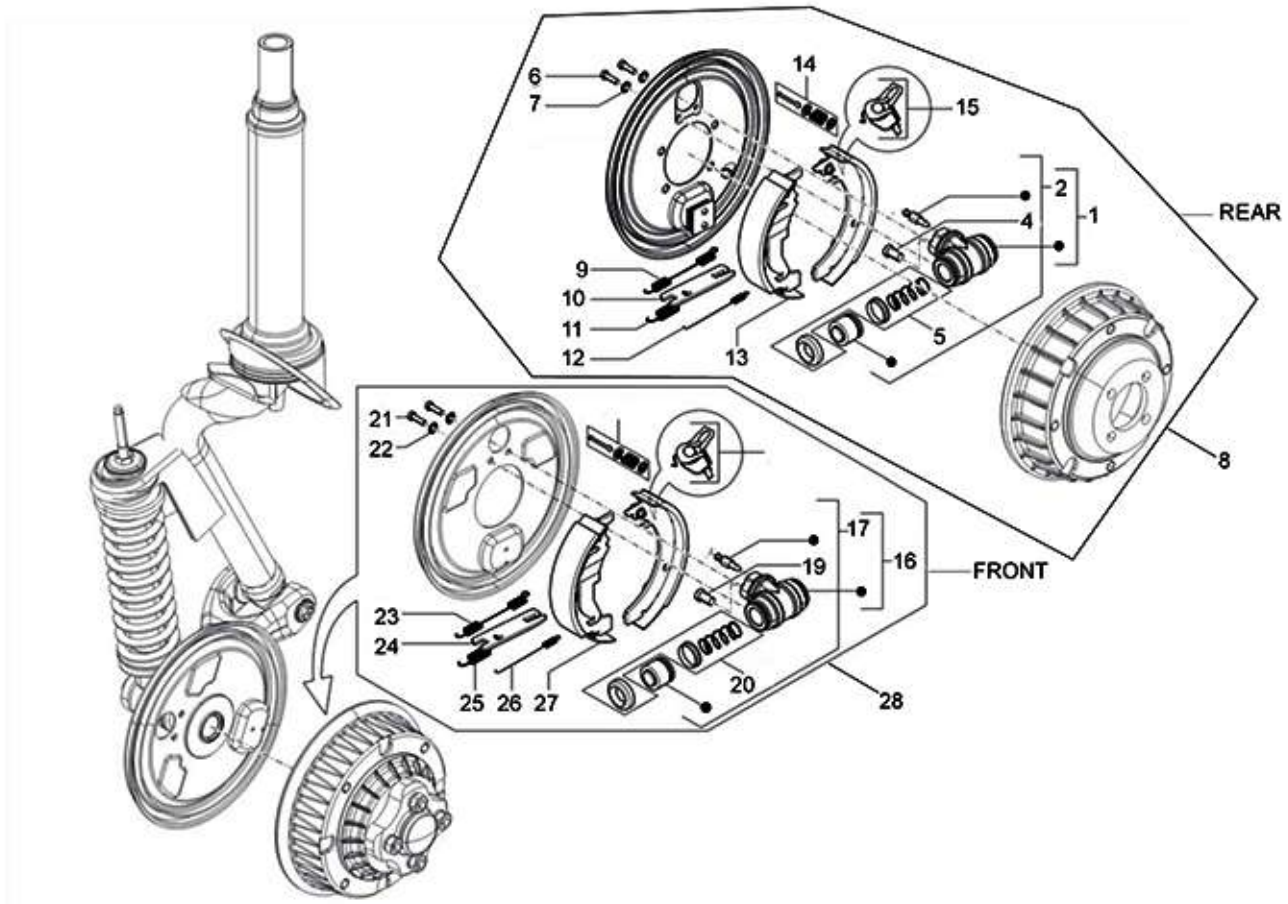
6
7
14
15
2
1
4
REAR
9
10
11
12
13
5
8
21
22
17
16
19
FRONT
23
24
25
26
27
20
28

85

Print Date: 05-Oct-2022

PLATE-35

BRAKE ASSEMBLY FRONT & REAR

Fig. No.	Part No.	Description	Qty	Remarks
1	B003014	WHEEL CYLINDER ASSY. DIA.25.4 MM	2	
2	B003328	MAJOR KIT WHEEL CYLINDER	1	
3	KIT95036	SHOE HOLD DOWN KIT	2	
4	B003300	BLEEDER SCREW	2	
5	925574	MINOR KIT WHL CYL. RR	2	
6	63440	BOLT M6X12	4	
7	12536	SPRING WASHER	4	
8	6C000271	REAR BRAKE ASSEMBLY	1	REAR LH
8	6C000342	REAR BRAKE ASSEMBLY RH	1	REAR RH
9	B003004	SHOE RETURN SPRING (UPPER)	2	
10	B003012	STRUT REAR	2	
11	B003011	STRUT SPRING RH	1	
11	B003002	STRUT SPRING	1	
12	B003003	SHOE RETURN SPRING (LOWER)	2	
13	B003331	REAR BRAKE SHOE KIT RH (NI)	1	
13	B003330	REAR BRAKE SHOE KIT LH	1	
14	KIT95036	SHOE HOLD DOWN KIT	1	
15	B006509	CLIP & PIN KIT	1	
16	B003017	WHEEL CYLINDER ASSY.	1	
17	B003324	MAJOR KIT WHEEL CYLINDER	2	
18	B006509	CLIP & PIN KIT	1	
19	B003300	BLEEDER SCREW	2	
20	B003325	MINOR KIT WHEEL CYLINDER	1	
21	63440	BOLT M6X12	2	
22	12536	SPRING WASHER	1	
23	B003003	SHOE RETURN SPRING (LOWER)	1	
24	B003002	STRUT SPRING	1	
25	B003002	STRUT SPRING	1	
26	B003003	SHOE RETURN SPRING (LOWER)	1	
27	KIT95033	FRONT BRAKE LINERS KIT	1	
28	6C000272	FRONT BRAKE ASSEMBLY	1	FRONT

86

Print Date: 05-Oct-2022

PLATE-36
CABLES

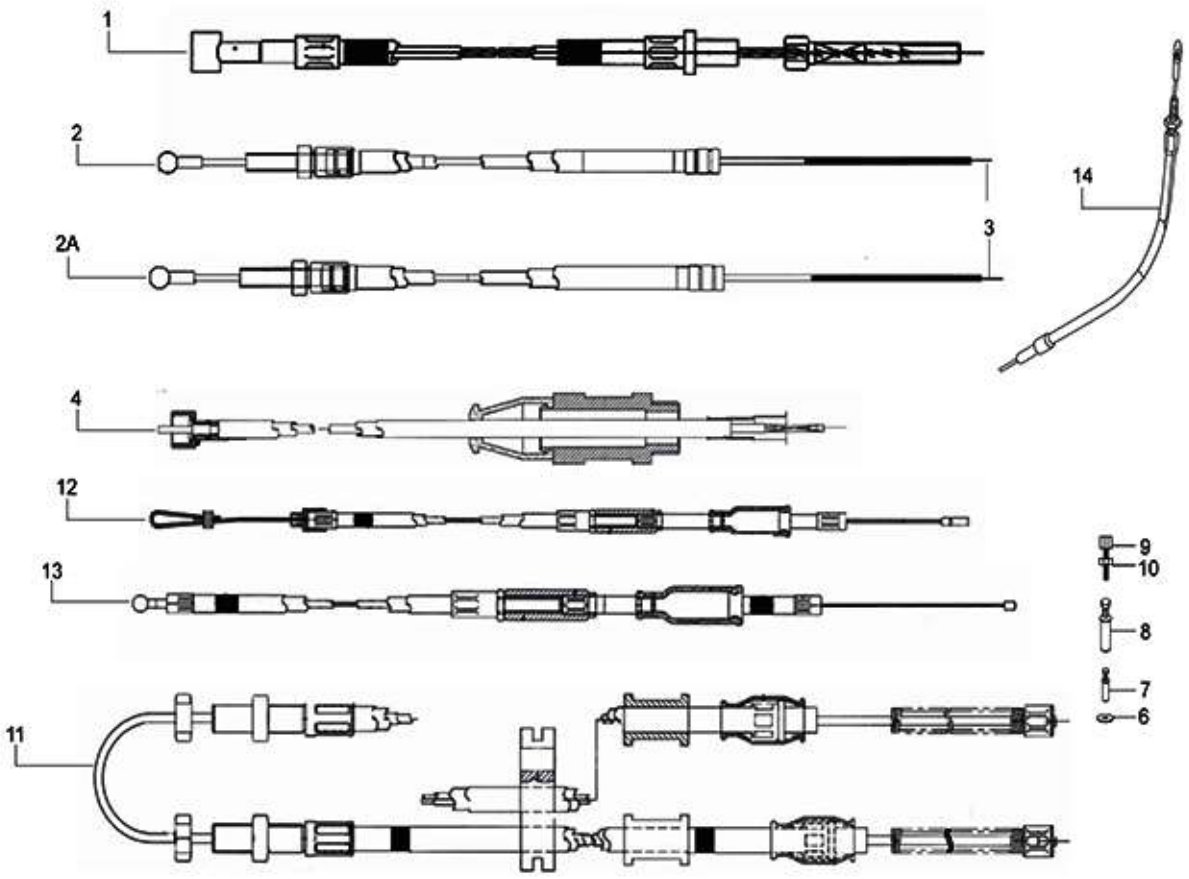
1
2
2A
3
14
4
12
13
9
10
8
7
6
11

87

Print Date: 05-Oct-2022

PLATE-36
CABLES

Fig. No.	Part No.	Description	Qty	Remarks
1	B075960	COVER REVERSE GEAR CONTROL	1	
1	B075566	CLUTCH CONTROL TRANSMISSION ASSLY.	1	
2	B073469	CABLE,GEAR CONTROL ASSLY NO.2	1	
2A	B075716	CABLE,GEAR CONTROL ASSLY -WHITE	1	
3	6A000068	INNER GEAR CONTROL CABLE (BLACK/WHITE)	1	
4	B076208	SPEEDO CABLE	1	
4a	6A001834	FLEXIBLE TRANSMISSION CABLE WITH WASHER	1	NI,Speedo Inner for B076208
5	6A000070	REVERSE GEAR INNER CABLE	1	
6	1A008804	REVERSE CABLE REACTION BRACKET	1	
7	B076078	SCREW TERMINAL ASSLY(REVERSE CABLE)	1	
8	B076364	SCREW TERMINAL ASSY. - GEAR CONTROL	2	
9	197071	ADJUSTER SCREW M6	2	
10	20106	HEX NUT M6	2	
11	B041774	PARKING BRAKE CABLE ASSY	1	
12	B042566	CHOKE CONTROL CABLE ASSY	1	CNG /LPG
13	6A001373	CABLE ASSY, ACCELERATOR	1	PETROL
13	B042356	ACCELERATOR CABLE WITH JONT (NEW)	1	CNG /LPG
14	B076036	ASSLY REVERSE GEAR CONTROL CABLE	1	
15	B075960	COVER REVERSE GEAR CONTROL	1	NI

88

Print Date: 05-Oct-2022

PLATE-37

TMC & BRAKING SYSTEM & TUBES

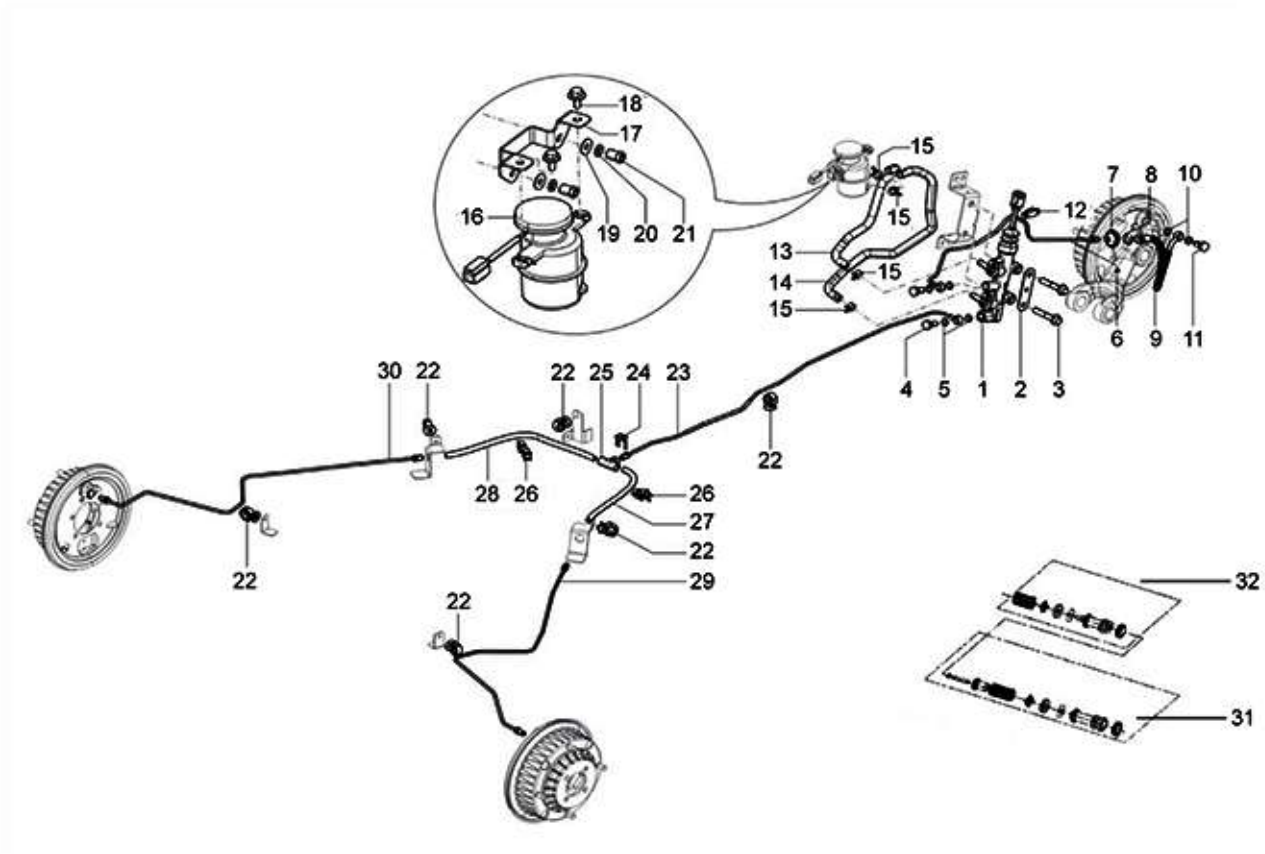
18
17
16
19
20
21
15
15
13
14
15
15
12
7
8
10
6
9
11
4
5
1
2
3
30
22
22
25
24
23
22
28
26
26
27
22
29
22
22
32
31

89

Print Date: 05-Oct-2022

PLATE-37

TMC & BRAKING SYSTEM & TUBES

Fig. No.	Part No.	Description	Qty	Remarks
1	B075485	TMC ASSY.(19.05)	1	
2	B075950	TMC SHIELD MTG. BKT.	1	
3	B074999	HEX BOLT	2	
4	661229	BANJO BOLT	2	
5	B076747	COPPER WASHER	4	
6	B075490	BRAKE BUNDY TUBE TMC TO FRONT WHEEL	1	
7	138237	CAP	1	
8	48197	PL WASHER 24X16X1.5	1	
9	587624R	FLEXIBLE PIPING FOR FRONT WHEEL BRAKE R	1	
10	127927R	PACKING	2	
11	587829	BENJO BOLT	1	
12	B076818	SEPARATOR CLAMP	1	
13	1E002748	BRAKE OIL FEEDING HOSE, NO.1	1	
14	1E002749	BRAKE OIL FEEDING HOSE, NO.2	1	
15	1A007152	HOSE CLAMP	4	
16	B073788	BRAKE OIL TANK	1	
17	NS	NOT SERVICEABLE	1	
18	661229	BANJO BOLT	2	
19	013880	PLAIN WASHER	2	
20	016406	SPRING WASHER	2	
21	632056	HEX NUT M6	2	
22	B076007	PIPE CLIP 1 WAY	6	
23	B075491	BRAKE BUNDY TUBE TMC TO REAR WHEEL	1	
24	136916	PLATE FOR RETAINING THE BRAKE FLEX. PIPE	1	
25	643692	THREE WAY UNION	1	
26	B075838	CLAMP	4	
27	644814R	FLEXIBLE BRAKE HOSE	1	
28	B023786R	FLEXIBLE PIPE FOR REAR WHEEL BRAKE	1	
29	B075836	BRAKE BUNDY TUBE FOR RH REAR WHEEL	1	
30	B075835	BRAKE BUNDY TUBE FOR LH REAR WHEEL	1	
31	940067	MAJOR KIT TMC (UG)	1	
32	940068	MINOR KIT TMC (UG)	1	

90

Print Date: 05-Oct-2022

PLATE-38

CONTROL PEDALS - LEVERS

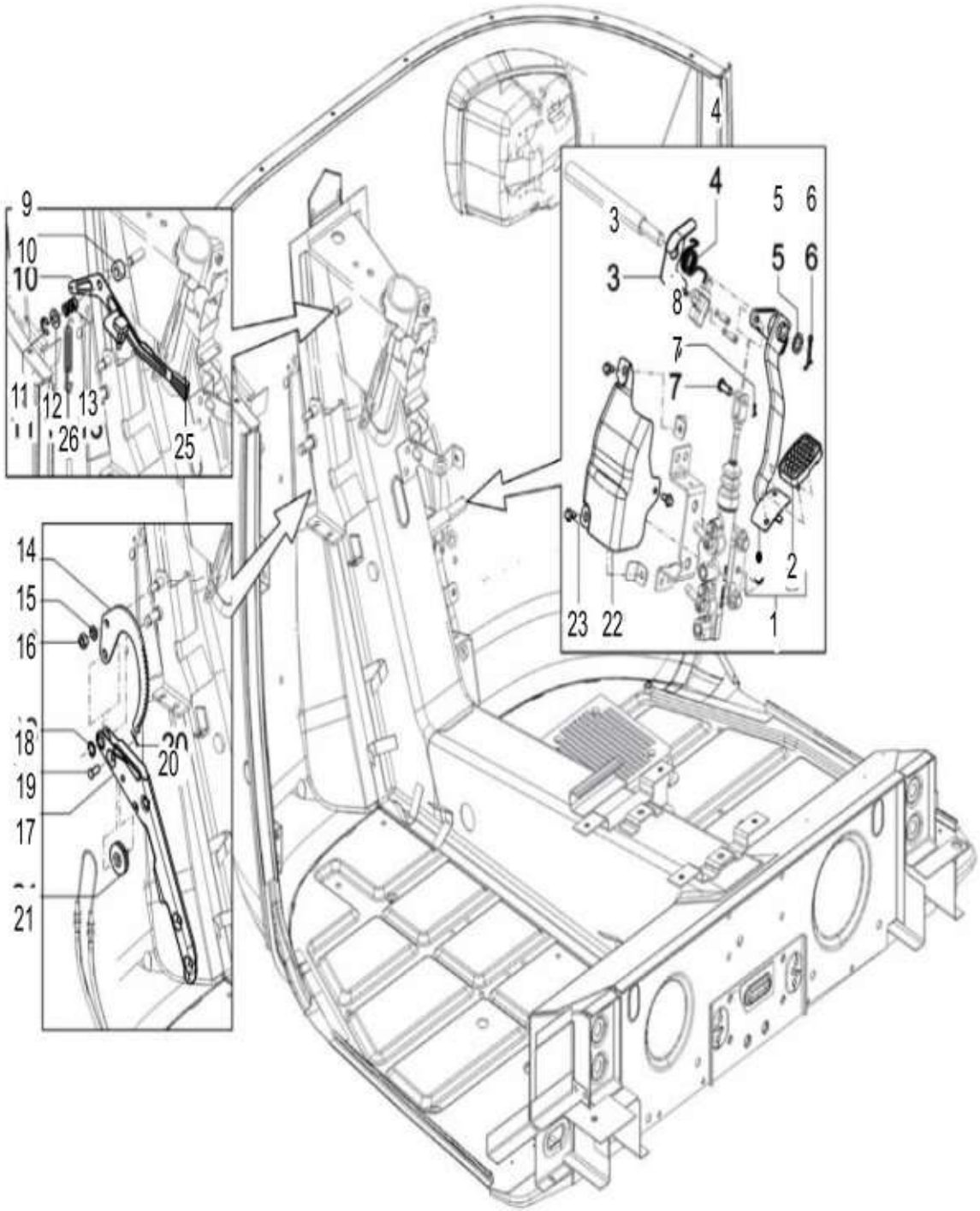
4
9
10
10
11
12
13
26
25
14
15
16
18
19
17
21
20
3
4
5
6
3
5
6
8
7
7
2
23
22
1

91

Print Date: 05-Oct-2022

PLATE-38

CONTROL PEDALS - LEVERS

Fig. No.	Part No.	Description	Qty	Remarks
1	6C000118	FOOT BRAKE PEDAL	1	
2	567461	RUBBER PROTECTION FOR PEDAL	1	
3	B075495	RACKET BRAKE SWITCH MTG. ASSLY	1	
4	B073800	TORSIONAL SPRING	1	
5	229524	WASHER 21X14.3X2	1	
6	568737	SPLIT PIN 4 X 25 (821 0425 2 2)	1	
7	652001	PIN	1	
8	567920	SPLIT PIN	1	
9	B042317	SPACER-RC LEVER	1	
10	B076455	LEVER S/ASSLY. REVERSE	1	
11	5969	CIRCLIP DIA 9 E TYPE	1	
12	6173	METALLIC PLAIN WASHER (808001026)	1	
13	108785	SPRING	1	
14	B042794	RATCHET , HAND BRAKE CONTROL	1	
15	016408	SPRING WASHER	1	
16	20108	HEX NUT M8	1	
17	B075697	HAND BRAKE CONTROL ASSLY	1	
18	6411	EXT CIRCLIP DIA 11	1	
19	567899	CLEVIS PIN	1	
20	567920	SPLIT PIN	1	
21	B075475	PULLEY FOR HAND BRAKE	1	
22	B075949	TMC PROTECTIVE SHIELD	1	
23	B074999	HEX BOLT	3	
24	B076036	ASSLY REVERSE GEAR CONTROL CABLE	1	
25	604717	KNOB FOR R.C.	1	NI
26	567690	REVERSE GEAR COUPLING SPRING	1	

92

Print Date: 05-Oct-2022

PLATE-39

SELECTORS - SWITCHES - BUTTONS

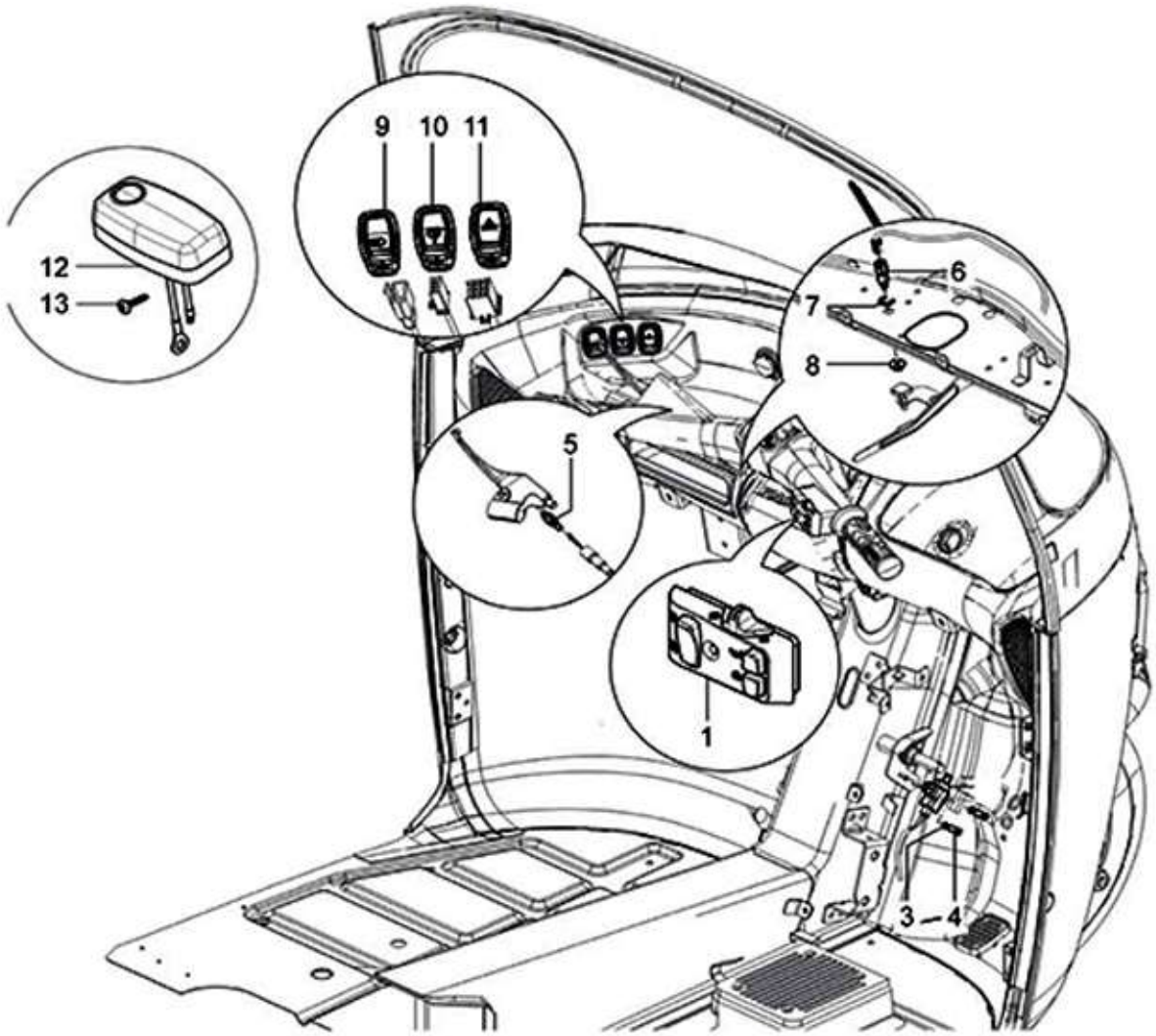
9
10
11
12
13
6
7
8
5
1
3
4

93

Print Date: 05-Oct-2022

PLATE-39

SELECTORS - SWITCHES - BUTTONS

Fig. No.	Part No.	Description	Qty	Remarks
1	B073850R	HBS (ST. BUTTON) - CITY UPGRADE (NEW) _ALL NUOVO MODEL	1	
2	567498R	BRAKE/REVERSE LIGHT SW (INTEGRAL CAP)-PAV	1	
3	3054	PLAIN WASHER	2	
4	B074568	SCREW TERMINAL	2	
5	642032	PUSH BUTTON-CLUTCH	1	
6	640762	PUSH BUTTON REVERSE	1	
7	5969	CIRCLIP DIA 9 E TYPE	1	
8	B076448	BUSH REVERSE SWITCH MTG.	1	
9	B073478R	SWITCH 3 POSITION	1	
10	B073479R	WIPER MOTOR SWITCH/ SWITCH WIPER MOTOR	1	
11	B073481R	HAZARD WARNING SWITCH WITH CROWN CAP (12V)(VE)	1	
12	B073715	CABIN LAMP	1	
13	15727	PAN SELF TAPPING SCREW	2	

94

Print Date: 05-Oct-2022

PLATE-40

TAIL LAMP ASSY

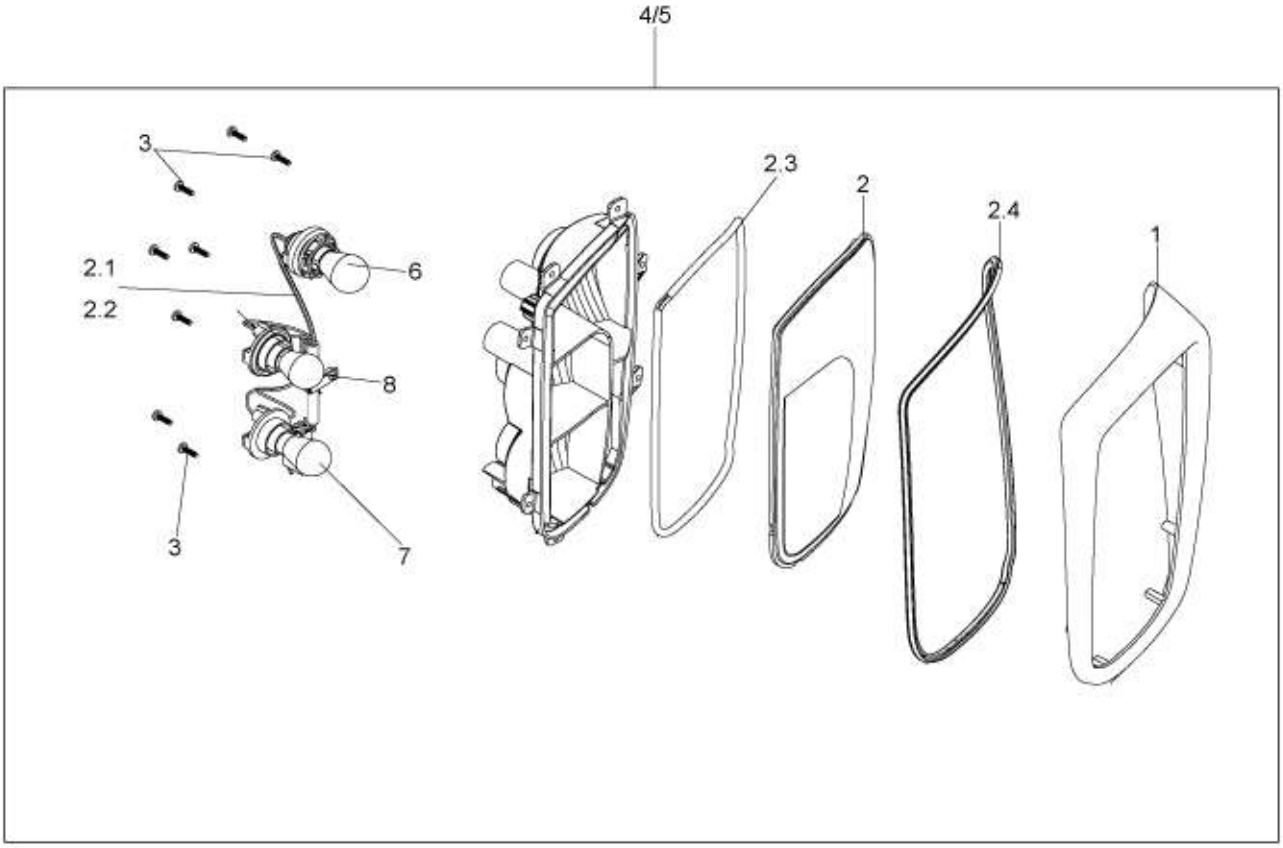
4/5
3
2.1
2.2
6
8
3
7
2.3
2
2.4
1

95

Print Date: 05-Oct-2022

PLATE-40
TAIL LAMP ASSY

Fig. No.	Part No.	Description	Qty	Remarks
1	6D001106	BEZEL OUTER LH (ALUMINIUM GREY)	1	
1	6D001107	BEZEL OUTER RH (ALUMINIUM GREY)	1	
2	6D000420	COMPLETE LENS LH	1	
2	6D000421	COMPLETE LENS RH	1	
2.1	6D000424	WIRE ASSY (WITHOUT REVERSE)	2	
2.2	6D000435	WIRE ASSY(WITH REVERSE)	2	
2.3	6D000426	GASKET INBUILT LENS AND HOUSING	2	
2.4	6D000437	RUBBER BEADING	2	Under Development
3	6D000425	SCREW 3.5X10	16	
4	6D001104	TAILLAMP LH W / REV FUNCTION(ALU GREY)	1	
5	6D001105	TAILLAMP RH W / REV FUNCTION(ALU GREY)	1	
6	6D000427	BULB 12V P21/5W	2	
7	6D000429	BULB 12V PY21W	2	
8	6D000428	BULB 12V P21W	2	

96

Print Date: 05-Oct-2022

PLATE-41
MAIN CABLE HARNESS

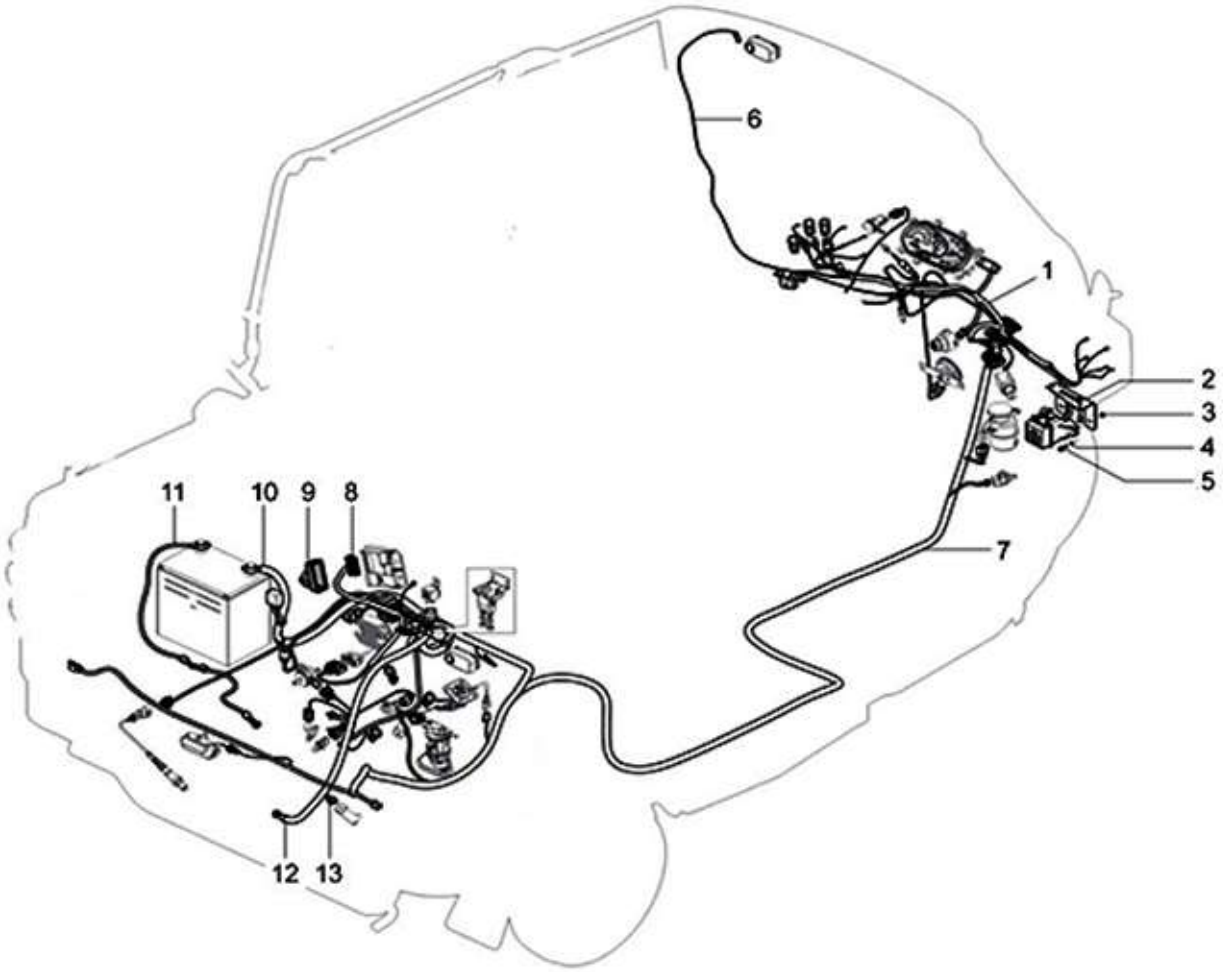
6
1
2
3
4
5
7
11
10
9
8
12
13

97

Print Date: 05-Oct-2022

PLATE-41

MAIN CABLE HARNESS

Fig. No.	Part No.	Description	Qty	Remarks
1	6D000274	WIRING HARNESS, I.P CITY PET BSVI	1	PTL
1	6D001172	WIRING HARNESS, IP	1	CNG -App. for Rear side Regulator mtg
1	6D000309	WIRING HARNESS, IP_LPG	1	LPG
1	6D000998	WIRING HARNESS,IP,MONO-FUEL	1	Mono Fuel (LPG)
2	6D000265	BKT, FUSE BOX MOUNTING FRONT ASSEMBLY	1	
3	20105	PLAIN NUT M5	4	
4	6965	SPRING WASHER DIA 5	4	
5	31058	HEX HEAD SCREW M5 X 16 CC8.8	4	
6	B073320R	PIG TAIL- CABIN LAMP (NEW)-PASSENGER	1	
7	6D000277	MAIN WIRING HARNESS-PTL	1	PTL
7	6D000277	MAIN WIRING HARNESS-PTL	1	PTL
7	6D000999	WIRING HARNESS,MAIN,MONO-FUEL	1	Mono Fuel (LPG)
9	569160	RUBBER BOOT	1	
10	6D000278	WIRING HARNESS, BATT +VE CITY PET BSVI	1	
11	B042063	BATTERY CABLE NEGATIVE	1	
12	B078213	BATTERY +VE CABLE-CUT STARTER MOTOR (LPG/CNG)	1	
13	1A007152	HOSE CLAMP	2	

98

Print Date: 05-Oct-2022

PLATE-42
ELECTRICAL DEVICES

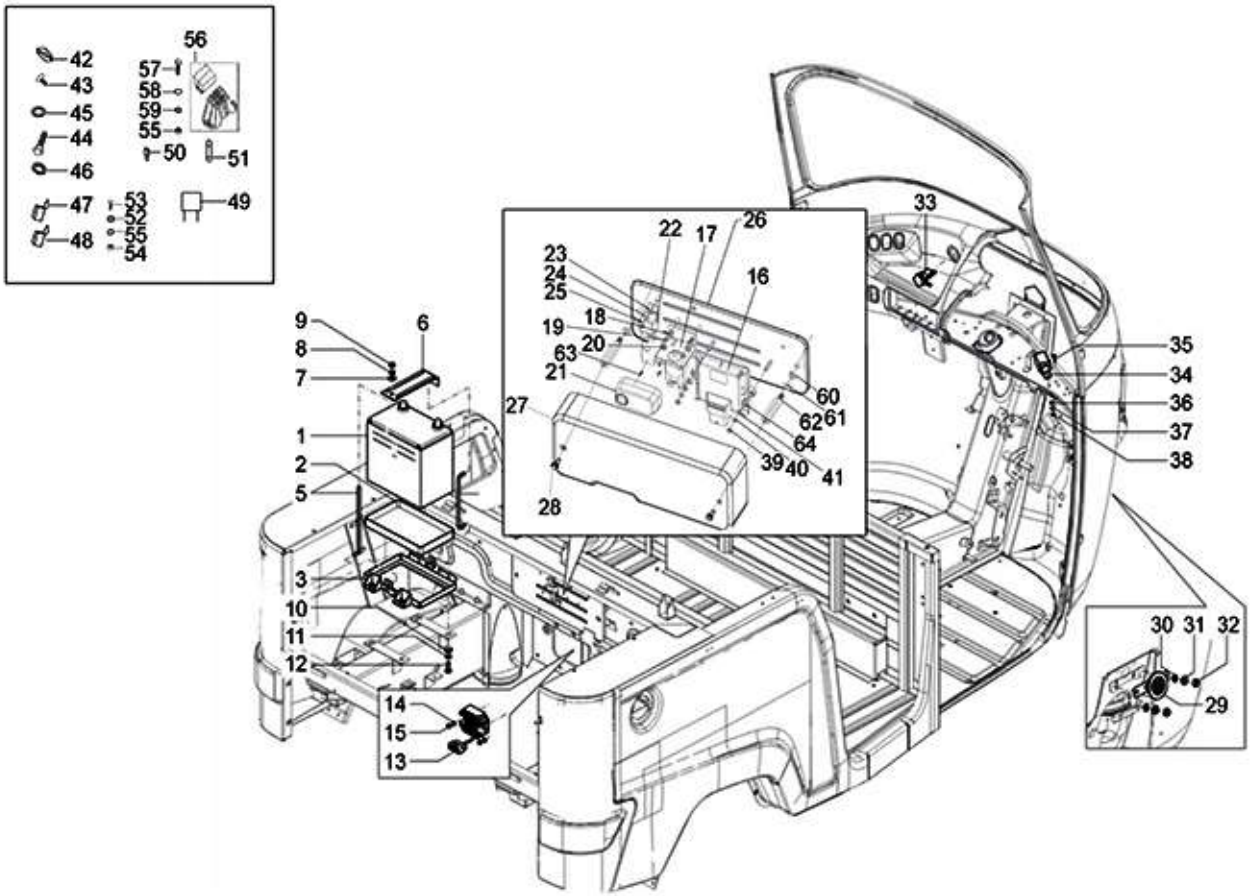
42
43
45
44
46
47
48
56
57
58
59
55
50
51
53
52
55
54
49
9
8
7
6
1
2
5
3
10
11
12
14
15
13
22
17
26
23
24
25
16
18
19
20
63
21
27
28
60
62
61
64
39
40
41
33
35
34
36
37
38
30
31
32
29

99

Print Date: 05-Oct-2022

PLATE-42
ELECTRICAL DEVICES

Fig. No.	Part No.	Description	Qty	Remarks
1	652253R	BATTERY 12V-35AH	1	
2	616649	BATTERY TRAY	1	
3	B042895	BATTERY STAND S/A	1	
4	604954	TENSION ROD	1	
5	632508	TENSION ROD ASSY. (BATTERY MOUNTING.)	1	
6	B003978	BATTERY HOLDING PLATE	1	
7	2383	PLAIN WASHER M20X8.5X2	1	
8	016408	SPRING WASHER	1	
9	20108	HEX NUT M8	1	
10	13861	PLAIN WASHER 20X8.2X2.5	4	
11	016408	SPRING WASHER	4	
12	31119	HEX HD SCREW M8 X 25	4	
13	1D000671R	VOLTAGE REGULATOR	1	
14	3056	PLAIN WASHER M6 OD12	2	
15	20106	HEX NUT M6	2	
16	CM301422	ELECTRONIC DEVICE	1	Petrol
16	CM309506	ELECTRONIC DEVICE	1	CNG
16	CM309511	ELECTRONIC DEVICE	1	Mono Fuel (LPG)
16	CM309505	ELECTRONIC DEVICE -LPG	1	LPG
17	587671R	4 ST RELAY SOLENOID	1	
18	3055	PLAIN WASHER M5	2	
19	16405	SPRING WASHER M5	2	
20	20105	PLAIN NUT M5	2	
21	B074491	ENGINE COMPARTMENT LAMP WITH PIGTAIL (UP)	1	
22	B023726R	REMOTE CONTROL SWITCH	1	
23	3056	PLAIN WASHER M6 OD12	1	
24	016406	SPRING WASHER	1	
25	31088	HEX HD SCREW M6 X 16 CL 8.8 (811061623)	1	
26	NS	NOT SERVICEABLE	1	
27	B073492	PLASTIC COVER-ELECTRICAL CLUSTER	1	
28	B042802	HEX SCREW	2	
29	B074033	HORN ASSLY(DIA 70)	1	
30	3056	PLAIN WASHER M6 OD12	2	
31	016406	SPRING WASHER	2	
32	20106	HEX NUT M6	2	

100

Print Date: 05-Oct-2022

PLATE-42
ELECTRICAL DEVICES

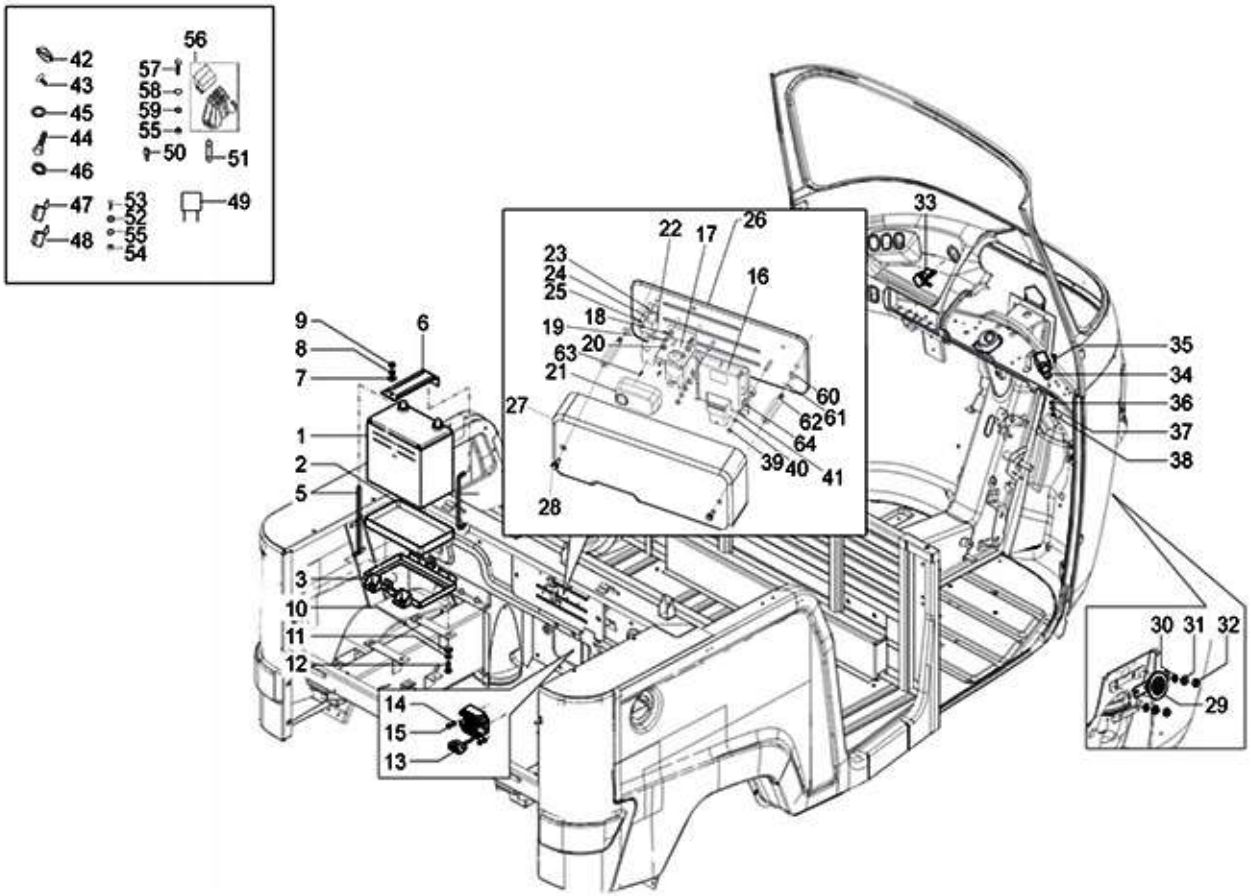
42
43
45
44
46
47
48
56
57
58
59
55
50
51
53
52
55
54
49
9
8
7
6
1
2
5
3
10
11
12
14
15
13
22
17
26
23
24
25
16
18
19
20
63
21
27
28
60
62
61
64
39
40
41
33
35
34
36
37
38
30
31
32
29

101

Print Date: 05-Oct-2022

PLATE-42
ELECTRICAL DEVICES

Fig. No.	Part No.	Description	Qty	Remarks
33	B074905	MOBILE CHARGER	1	
34	6D000305	FLASHER RELAY (BG LI-IN)	1	
35	31057	HEX HEAD SCREW M5 X 14 CL 8.8	1	
36	3055	PLAIN WASHER M5	1	
37	12546	PLAIN WASHER / MULTI TOOTH LOCK WASHER M5	1	
38	20105	PLAIN NUT M5	1	
39	20106	HEX NUT M6	2	
40	016406	SPRING WASHER	2	
41	3056	PLAIN WASHER M6 OD12	2	
42	B075693	MTG BKT ONE WAY FUSE - HOLDER	2	
43	568692	PAN SELF TAP SCREW 6SG X 16AB	1	
44	31088	HEX HD SCREW M6 X 16 CL 8.8 (811061623)	1	
45	3056	PLAIN WASHER M6 OD12	1	
46	016406	SPRING WASHER	1	
47	680166	SAFETY STARTER RELAY	1	
48	B023727R	CONTACTOR	2	
49	567706	FUSE 30 A	1	
50	604557	FUSE (10A)	6	
51	925786	ECU - FUSE (2A) (N.I)	1	
52	12546	PLAIN WASHER / MULTI TOOTH LOCK WASHER M5	1	
53	31057	HEX HEAD SCREW M5 X 14 CL 8.8	1	
54	20105	PLAIN NUT M5	5	
55	3055	PLAIN WASHER M5	3	
56	567581	FOUR POLE FUSE BOX	1	
57	31058	HEX HEAD SCREW M5 X 16 CC8.8	24	
58	6078	PLAIN WASHER 12 X 5.2 X 1	2	
59	6965	SPRING WASHER DIA 5	4	
60	016408	SPRING WASHER	2	
61	3058	PLAIN WASHER 15X8.4X1.5	2	
62	B073490	MTG STUD FOR PLASTIC COVER	2	
63	15727	PAN SELF TAPPING SCREW	2	
64	B078506	BUSH	2	
65	6D000480	5A MINIVAL FUSE BIEGE	7	NI
66	6D000479	10A MINIVAL FUSE RED	4	NI
67	6D000481	15A MINIVAL FUSE BLUE	2	NI

102

Print Date: 05-Oct-2022

PLATE-42
ELECTRICAL DEVICES

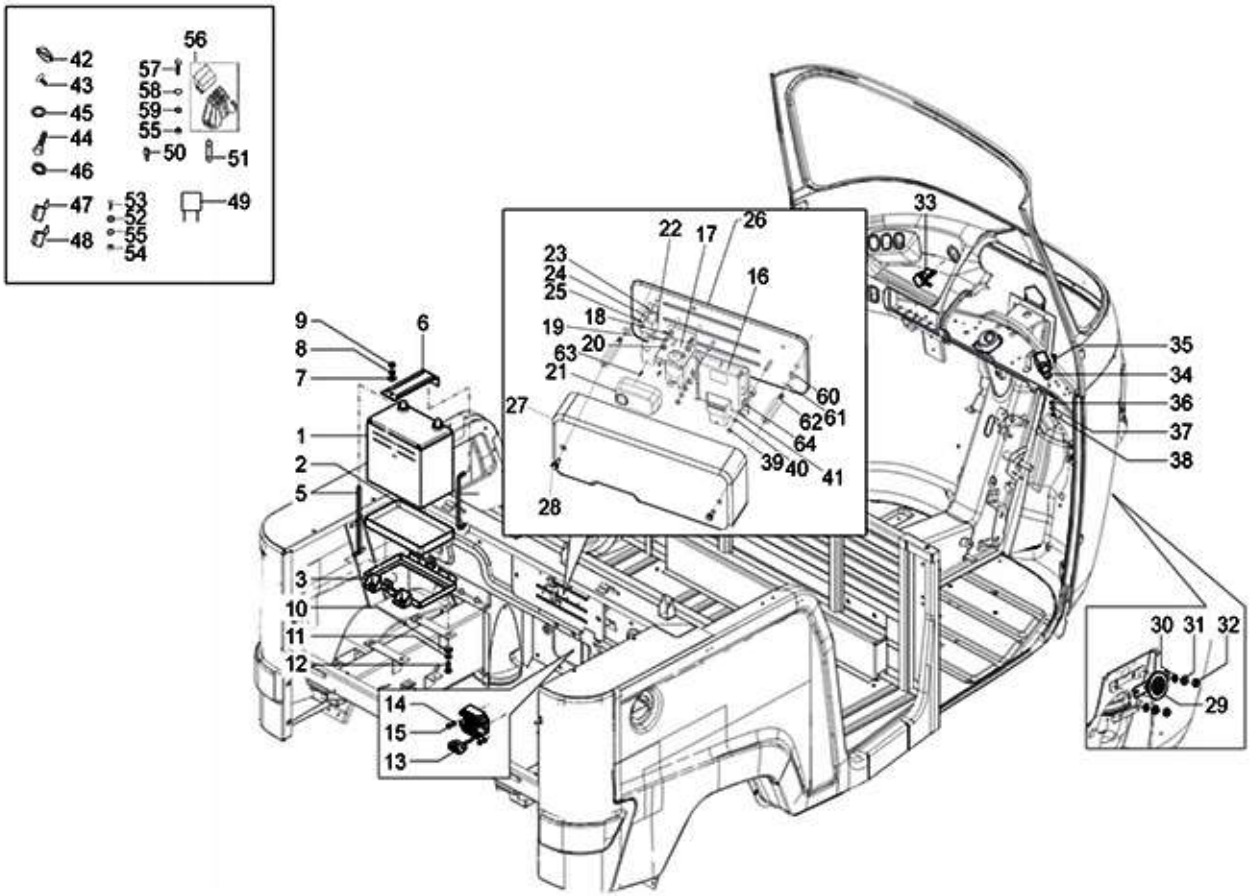
42
43
45
44
46
47
48
56
57
58
59
55
50
51
53
52
55
54
49
9
8
7
6
1
2
5
3
10
11
12
14
15
13
22
17
26
23
24
25
16
18
19
20
63
21
27
28
60
62
61
64
39
40
41
33
35
34
36
37
38
30
31
32
29

103

Print Date: 05-Oct-2022

PLATE-42
ELECTRICAL DEVICES

Fig. No.	Part No.	Description	Qty	Remarks
68	6D000478	20A MINIVAL FUSE YELLOW	1	NI
69	6D000482	30A MICRO RELAY	1	NI
70	6D000599	40A MAXIVAL FUSE ORANGE	1	NI

104

Print Date: 05-Oct-2022

PLATE-43
WINDSCREEN WIPER

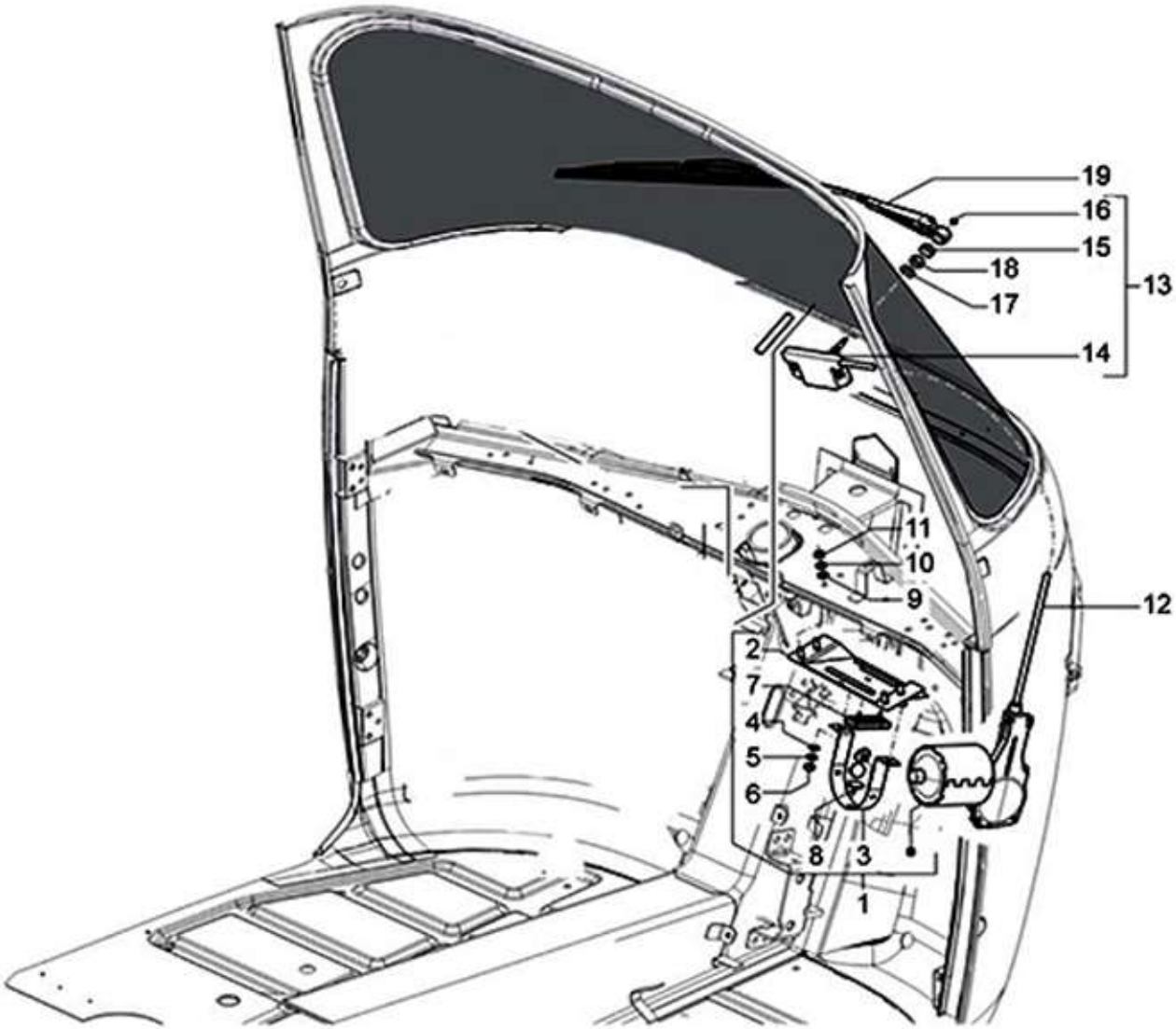
19
16
15
18
17
13
14
11
10
9
12
2
7
4
5
6
8
3
1

105

Print Date: 05-Oct-2022

PLATE-43
WINDSCREEN WIPER

Fig. No.	Part No.	Description	Qty	Remarks
1	B073685	WIPER MOTOR ASSY. WITH MTG. BKT.	1	
2	569166	WIPER MOTOR MOUNTING BRACKET	1	
3	569177	STRAP ASSY FOR WIPER MOTOR (N.I.)	1	
4	016406	SPRING WASHER	2	
5	3056	PLAIN WASHER M6 OD12	2	
6	20106	HEX NUT M6	2	
7	569178	RUBBER PAD FOR WIPER MOTO (N.I.)	1	
8	940161	CABLE RACK APE CITY	1	NI
9	3056	PLAIN WASHER M6 OD12	4	
10	016406	SPRING WASHER	4	
11	20106	HEX NUT M6	4	
12	B073682	WIPER BUNDY - MOTOR TO WHEEL BOX	1	
13	569197	WHEEL BOX ASSY. (MOD.)	1	
14	NS	NOT SERVICEABLE	1	
15	NS	NOT SERVICEABLE	1	
16	569165	DOME NUT	1	
17	6173	METALLIC PLAIN WASHER (808001026)	1	
18	20106	HEX NUT M6	1	
19	B073600	WIPER ARM & BLADE ASSY	1	

106

Print Date: 05-Oct-2022

PLATE-44
STICKERS

City NXT+

City NXT+

Ape
City NXT+

LPG

LPG

LPG
MONO

PIAGGIO

107

Print Date: 05-Oct-2022

PLATE-44
STICKERS

Fig. No.	Part No.	Description	Qty	Remarks
1	6A000597	CNG STICKER	1	CNG
2	B041583	STICKER FOR CNG	1	CNG
3	B078919	APE CITY STICKER (FRONT PANEL)	1	CNG/LPG/PTL
4	6B001978	BS6 LOGO	1	CNG/LPG/PTL
5	6B002790	36 MONTH SUPER WARRANTY STICKER	1	CNG/LPG
6	6B002978	NXT+ FRONT DECAL	1	CNG/LPG/PTL
7	6B002979	NXT+ LH SIDE WALL DECAL	1	CNG/LPG/PTL
8	6B002980	NXT+ RH SIDE WALL DECAL	1	CNG/LPG/PTL
9	6B002981	NXT+ REAR DECAL	1	CNG/LPG/PTL
10	6A000622	STICKER LPG	1	LPG
11	B041584	STICKER FOR LPG	1	LPG
12	B042175	STICKER FOR LPG MONO	1	LPG MONO
13	B078925	PIAGGIO STICKER (VISUAL BARRIER	1	CNG/LPG/PTL

108

Print Date: 05-Oct-2022

PLATE-45
LPG KIT

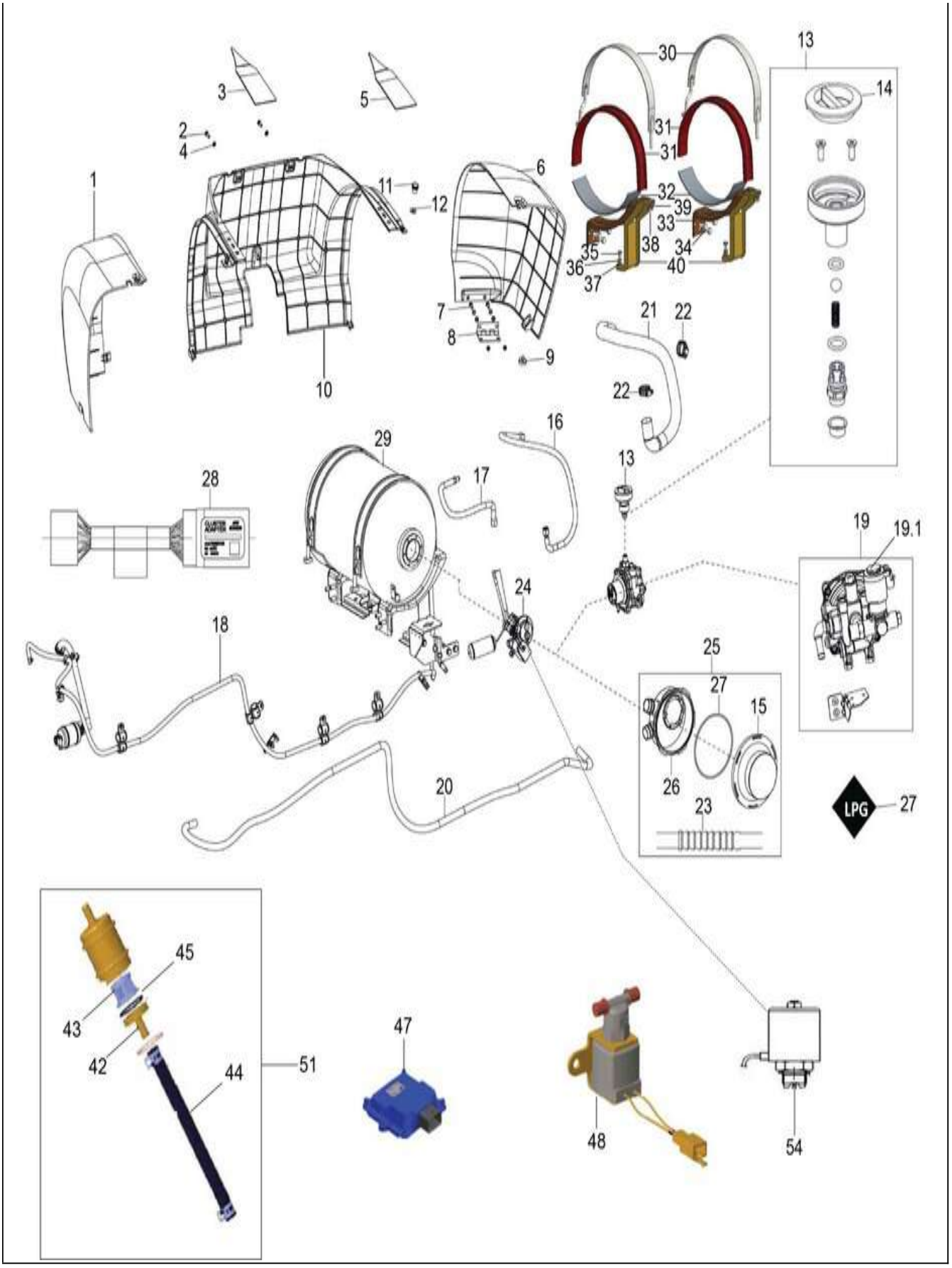
1
2
3
4
5
6
7
8
9
10
11
12
13
14
15
16
17
18
19
19.1
20
21
22
23
24
25
26
27
28
29
30
31
32
33
34
35
36
37
38
39
40
LPG
27
42
43
44
45
47
48
51
54

109

Print Date: 05-Oct-2022

PLATE-45
LPG KIT

Fig. No.	Part No.	Description	Qty	Remarks
1	B076202	CYLINDER COVER - LPG LH	1	
2	31088	HEX HD SCREW M6 X 16 CL 8.8 (811061623)	3	
3	6B001312	PLASTIC COVER ATTACHMENT LH	1	
4	16406	SPRING WASHER M6 OD12	4	
5	6B001313	PLASTIC COVER ATTACHMENT RH	1	
6	B076201	CYLINDER COVER - RH-COMMON CNG/LPG	1	
7	B076201	CYLINDER COVER - RH-COMMON CNG/LPG	1	
8	B076332	HINGE ASSEMBLY	1	
9	NS	NOT SERVICEABLE	1	
10	6B001321	CYLINDER COVER - CENTRAL CITY BSVI	1	
11	605183	FIX KNOB	4	
12	2383	PLAIN WASHER M20X8.5X2	4	
13	6A000509	LPG FILLER VALVE ASSLY.	1	App. For front side Regulator(cabin)
13	B006286	FILLER CONNECTOR WITH CAP	1	App. for Rear side Regulator mtg (Long member)
14	6A000512	FILLER CAP	1	
15	6A000507	SEAL BOX TOP	1	Not Serviceable
16	6A001486	LP HOSE AASEMBLY (MFV TO FV)	1	App. for Rear side Regulator mtg (Long member)
16	6A000748	LP HOSE (MFV TO FV)	1	App. For front side Regulator(cabin)
17	6A001876	LPG FLEXIBLE HOSE MFV TO REGULATOR	1	App. for Rear side Regulator mtg (Long member)
17	6A001165	LP HOSE (MFV TO HPR)	1	App. For front side Regulator(cabin)
18	6A001854	VACCUM HOSE (LPG)	1	App. for Rear side Regulator mtg (Long member)
18	6A000489	VACCUME HOSE	1	App. For front side Regulator(cabin)
19	6A000520	LPG PRESSURE REGULATOR	1	
19.1	6A000519	LPG PRESSURE REGULATOR ASSLY (WITH BRACKET)	1	App. For front side Regulator(cabin)
19.1	6A001856	LPG REGULATOR ASSEMBLY	1	App. for Rear side Regulator mtg (Long member)
20	6A001855	LP HOSE, REG. TO FILTER	1	App. for Rear side Regulator mtg (Long member)
20	6A000522	HOSE PRESSURE REG. TO PULSATION DAMP LPG	1	App. For front side Regulator(cabin)
21	B041491	VENT HOSE ASSY - 1	1	
22	6A000621	CLIP FOR CORRUGATED HOSE	2	
23	6A000620	CORRUGATED EXPANDABLE HOSE	1	
24	6A000158	MULTI FUNCTION VALVE, 20.6LTR LPG CYL.	1	
25	B073084	SEAL BOX	1	
26	6A000505	SEAL BOX BOTTOM	1	Not Serviceable
27	6A000506	SEAL BOX O RING	1	Not Serviceable
28	6D000298	CLUSTER ADAPTOR	1	

110

Print Date: 05-Oct-2022

PLATE-45
LPG KIT

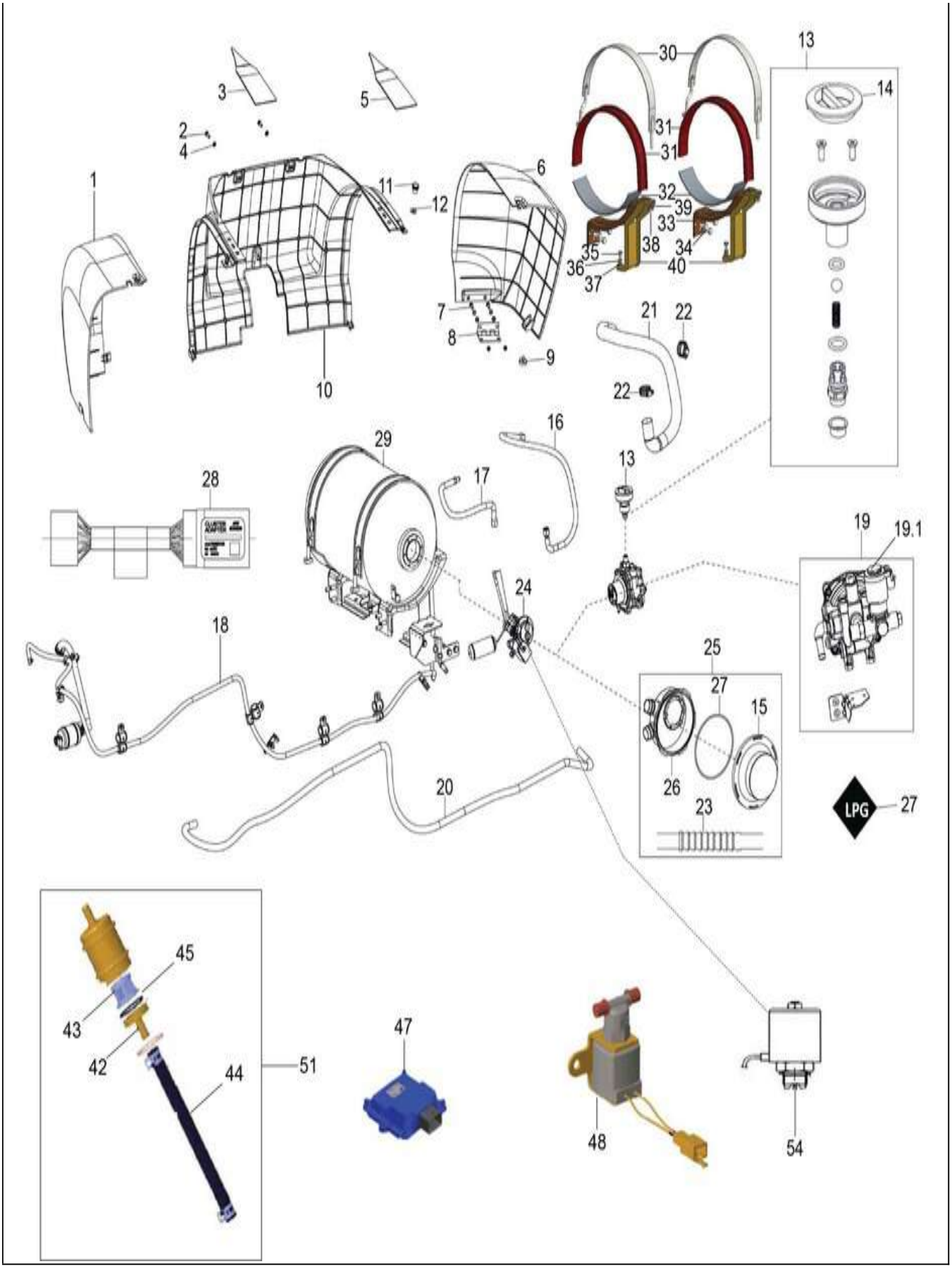
1
2
3
4
5
6
7
8
9
10
11
12
13
14
15
16
17
18
19
19.1
20
21
22
23
24
25
26
27
28
29
30
31
32
33
34
35
36
37
38
39
40
LPG
27
42
43
44
45
47
48
51
54

111

Print Date: 05-Oct-2022

PLATE-45
LPG KIT

Fig. No.	Part No.	Description	Qty	Remarks
29	6A000124	LPG CYLINDER- 20.6 LTR	1	
30	6A000216	STRAP CYLINDER MTG	1	
31	604863	UPPER STRAPS ASSY.	2	
32	B079362	RUBBER PAD BOTTOM	2	
33	B078342	CYL. MTG. BKT 40LTR	2	
34	889302	SCREW	2	
35	31116	HEX HD. SCREW M8X16	6	
36	3058	PLAIN WASHER 15X8.4X1.5	2	
37	16408	SPRING WASHER M8	2	
38	20110	HEX NUT M10	2	
39	16410	SPRING WASHER	2	
40	6B000850	CYLINDER SUPPORT BRACKET ASSLY	2	
41	6A001078	OUTLET NIPPLE, CNG REGULATOR	1	
42	6A001038	OUTLET PORT	1	
43	6A001039	FILTER CARTRIDGE	1	
44	6A001857	LP HOSE, FILTER TO INJECTOR	1	App. for Rear side Regulator mtg (Long member)
44	6A000739	HOSE LPG/CNG (FLEXIBLE)	1	App. For front side Regulator(cabin)
45	6A001037	OUTLET CAP O-RING	1	
46	6A001004	TANK VALVE	1	
47	CM309506	ELECTRONIC DEVICE	1	
48	6A000500	PETROL SOLENOID WITH BKT.	1	
49	6A000482	CNG HIGH PRESSURE TUBE ASSLY.	1	
50	920012	SOLENOID SWITCH (MFV)	1	NI
51	6A000740	PULSATION DAMPENER AND FILTER ASSLY.	1	App. For front side Regulator(cabin)
51	6A001858	PULSATION DAMPENER AND FILTER ASSLY.	1	App. for Rear side Regulator mtg (Long member)
52	6A000490	BRACKET FOR CNG PRESSURE REG. MOUNTING	1	App. for Rear side Regulator mtg (Long member)
53	B006287	HOUSING ASSEMBLY FOR FILLER CONNECTOR	1	App. for Rear side Regulator mtg (Long member)
54	6D001113	SOLENOID VALVE	1	

112

Print Date: 05-Oct-2022

PLATE-46

CNG KIT- Applicable For Rear Side Regulator mtg.(Long Member)

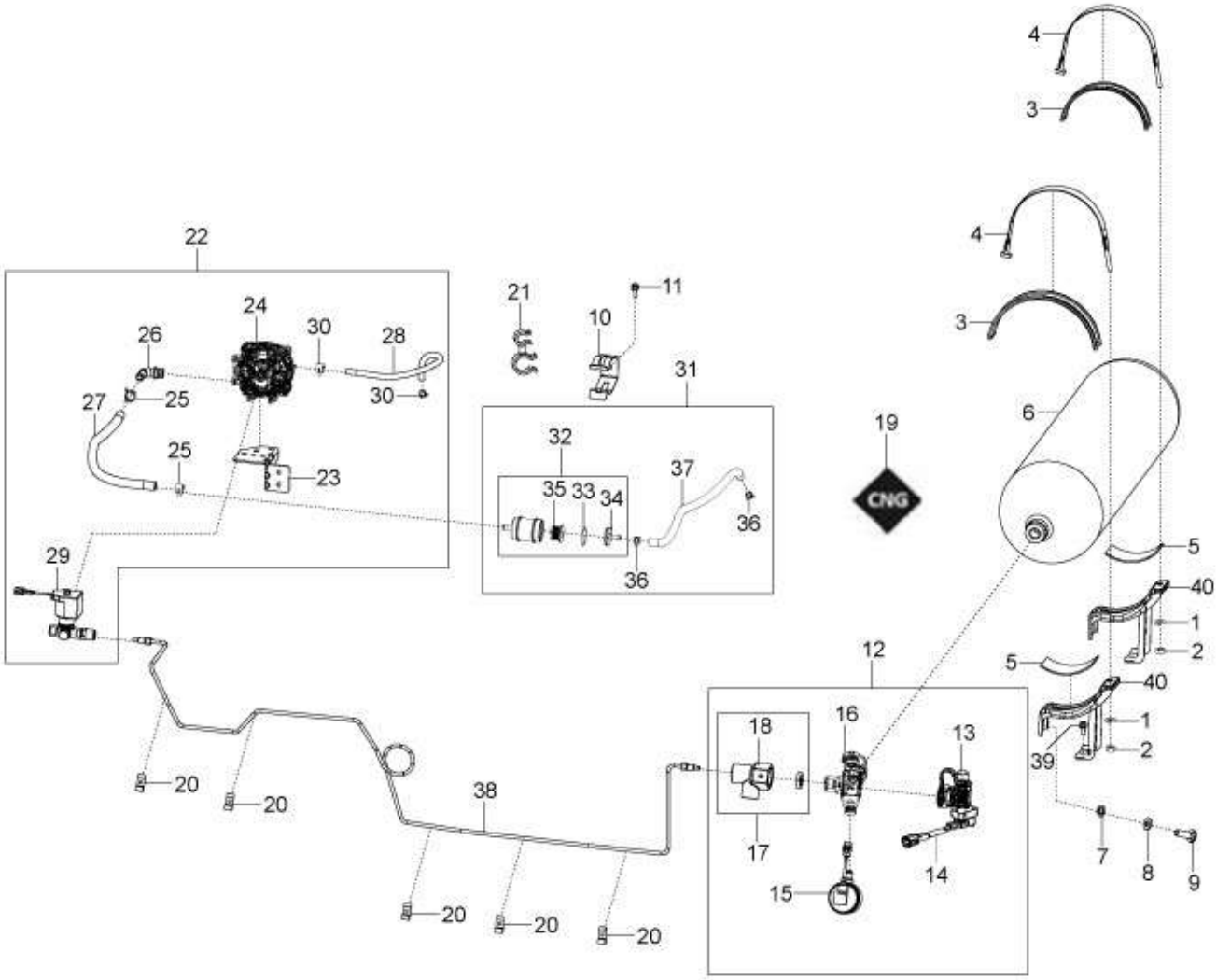
4
3
4
3
6
5
40
1
2
5
40
1
2
39
7
8
9
22
24
26
30
28
27
25
30
25
23
29
21
11
10
31
32
35
33
34
37
36
36
19
CNG
12
18
16
13
17
15
14
20
20
38
20
20
20

113

Print Date: 05-Oct-2022

PLATE-46

CNG KIT- Applicable For Rear Side Regulator mtg.(Long Member)

Fig. No.	Part No.	Description	Qty	Remarks
1	16410	SPRING WASHER	2	
2	20110	HEX NUT M10	2	
3	632184	RUBBER STRAP UPPER	2	
4	B075622	RUBBER STRAP	2	
5	B079362	RUBBER PAD BOTTOM	2	
6	B002250R	CNG CYLINDER 30 LTRS	1	
7	16405	SPRING WASHER M5	4	
8	3055	PLAIN WASHER M5	4	
9	31054	HEX HD. SCREW M5X10 CL8.8	4	
10	6A000836	SNAP FIT BKT., FILTER MTG (ARAYMOND)	1	
11	660168	PAN SELF TP. SCREW 10 SGX13AB	1	
12	6A000481	CNG TANK VALVE SUB ASSY	1	
13	6A000601	NZS ASSY	1	
14	6D000544	SWITCH, MICRO	1	
15	6A000752	CNG PRESSURE GAUGE WITH LEVEL SENSOR	1	
16	6A001004	TANK VALVE	1	
17	6A001020	TEE CONNECTOR M12 X 1, ASSEMBLY	1	
18	6A000600	T-CONNECTOR	1	
19	6A000597	CNG STICKER	2	
20	6A000904	CLAMP FOR METAL PIPE	5	
21	6A001003	SWIVEL CLAMP	1	
22	6A001846	REGULATOR ASSEMBLY WITH BRACKET	1	
23	6A000490	BRACKET FOR CNG PRESSURE REG. MOUNTING	1	
24	6A000488	CNG PRESSURE REGULATOR	1	
25	6A000495	CLAMP FOR HOSE PR. REG. TO DAMPNER	2	
26	6A001078	OUTLET NIPPLE, CNG REGULATOR	1	
27	6A001847	LP HOSE - REGULATOR TO DAMPNER	1	
28	6A001848	VACCUM HOSE	1	
29	6D000755	CNG, HIGH PRESSURE SOLENOID VALVE	1	
30	6A000491	CLAMP FOR VACCUME HOSE	2	
31	6A001850	PULSATION DAMPENER AND FILTER ASSLY.	1	
32	6A000497	PULSATION DAMPNER WITH FILTER	1	
33	6A001037	OUTLET CAP O-RING	1	
34	6A001038	OUTLET PORT	1	
35	6A001039	FILTER CARTRIDGE	1	

114

Print Date: 05-Oct-2022

PLATE-46

CNG KIT- Applicable For Rear Side Regulator mtg.(Long Member)

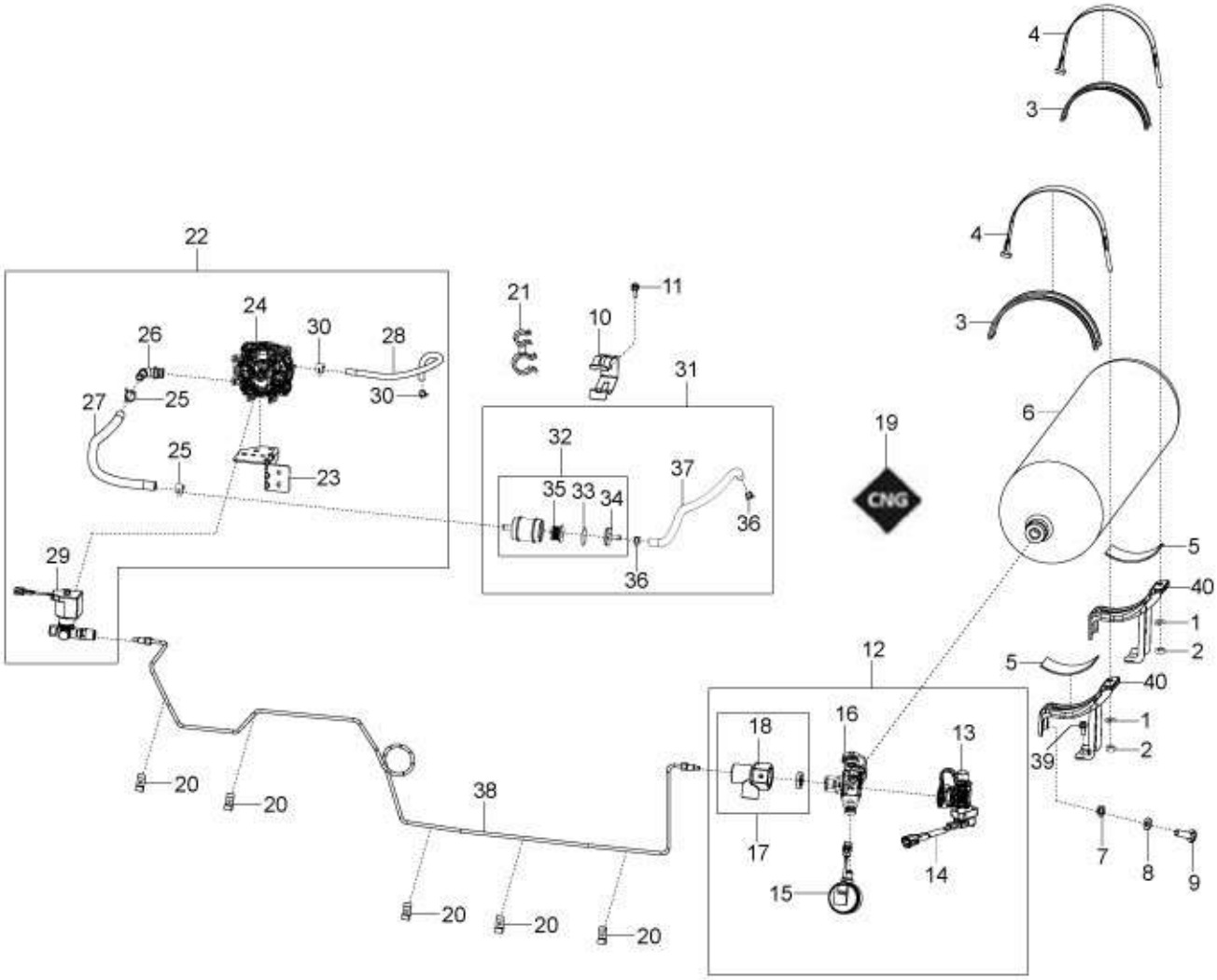
4
3
4
3
6
5
40
1
2
5
40
1
2
39
7
8
9
22
24
26
30
28
27
25
30
25
23
29
21
11
10
31
32
35
33
34
37
36
36
19
CNG
12
18
16
13
17
14
15
20
20
38
20
20
20

115

Print Date: 05-Oct-2022

PLATE-46

CNG KIT- Applicable For Rear Side Regulator mtg.(Long Member)

Fig. No.	Part No.	Description	Qty	Remarks
36	6A000495	CLAMP FOR HOSE PR. REG. TO DAMPNER	2	
37	6A001849	LP HOSE - DAMPNER TO INJECTOR	1	
38	6A001845	HP TUBE, CONNECTOR TO REGULATOR	1	
39	D9166140616	BOLT, W/WASHER	2	
40	6B000850	CYLINDER SUPPORT BRACKET ASSLY	2	

116

Print Date: 05-Oct-2022

PARTS INDEX

APE CITY NXT PLUS PTL CNG LPG BSVI

117

Print Date: 05-Oct-2022

PART NO	BLOCK	PART NO	BLOCK	PART NO	BLOCK
000267	PLATE-10	018639	PLATE-15	132129	PLATE-14
002139	PLATE-12	018639	PLATE-16	132134	PLATE-14
006410	PLATE-14	018639	PLATE-19	136916	PLATE-37
006450	PLATE-14	107718	PLATE-32	137235	PLATE-32
009101	PLATE-12	107871	PLATE-32	138237	PLATE-37
013880	PLATE-18	108785	PLATE-38	13861	PLATE-42
013880	PLATE-19	108873	PLATE-32	13861	PLATE-21
013880	PLATE-25	108874	PLATE-32	13861	PLATE-21
013880	PLATE-25	109064	PLATE-32	150579	PLATE-32
013880	PLATE-25	109066	PLATE-32	15335	PLATE-23
013880	PLATE-26	109117	PLATE-32	15594	PLATE-33
013880	PLATE-37	109265	PLATE-32	157103	PLATE-33
016406	PLATE-42	109404	PLATE-31	15727	PLATE-39
016406	PLATE-42	109775	PLATE-31	15727	PLATE-42
016406	PLATE-42	109892	PLATE-33	157716	PLATE-22
016406	PLATE-42	111353	PLATE-2	157716	PLATE-30
016406	PLATE-43	111356	PLATE-34	15900	PLATE-25
016406	PLATE-43	111498	PLATE-34	15900	PLATE-25
016406	PLATE-18	112867R	PLATE-34	15900	PLATE-30
016406	PLATE-20	112898	PLATE-2	15911	PLATE-24
016406	PLATE-25	113278	PLATE-34	16319	PLATE-31
016406	PLATE-25	117401	PLATE-2	16405	PLATE-42
016406	PLATE-27	117402	PLATE-2	16405	PLATE-46
016406	PLATE-31	120164019	PLATE-13	16405	PLATE-22
016406	PLATE-31	120170018	PLATE-13	16405	PLATE-22
016406	PLATE-34	12138	PLATE-31	16405	PLATE-24
016406	PLATE-37	122032014	PLATE-12	16405	PLATE-25
016408	PLATE-38	125181	PLATE-31	16405	PLATE-26
016408	PLATE-42	125289	PLATE-32	16406	PLATE-45
016408	PLATE-42	12536	PLATE-35	16406	PLATE-26
016408	PLATE-42	12536	PLATE-35	16408	PLATE-45
016408	PLATE-18	12546	PLATE-42	16410	PLATE-45
016408	PLATE-18	12546	PLATE-42	16410	PLATE-46
016408	PLATE-20	12546	PLATE-24	16410	PLATE-23
016408	PLATE-21	127012019	PLATE-13	16410	PLATE-32
016408	PLATE-22	127013013	PLATE-13	16410	PLATE-32
016408	PLATE-22	127016015	PLATE-2	16410	PLATE-33
016408	PLATE-23	127111011	PLATE-14	16410	PLATE-33
016408	PLATE-23	127185012	PLATE-13	165121014	PLATE-2
016408	PLATE-28	127460010	PLATE-13	165155R	PLATE-14
016408	PLATE-33	12790	PLATE-33	16603	PLATE-22
018639	PLATE-7	127927R	PLATE-37	16603	PLATE-25
018639	PLATE-11	128633	PLATE-33	16603	PLATE-25

118

Print Date: 05-Oct-2022

PART NO	BLOCK	PART NO	BLOCK	PART NO	BLOCK
16620	PLATE-31	1A006740	PLATE-11	1A009589	PLATE-9
16626	PLATE-31	1A006742	PLATE-11	1A009590	PLATE-9
16626	PLATE-31	1A006806	PLATE-14	1A009591	PLATE-9
16670	PLATE-29	1A006812	PLATE-8	1A009592	PLATE-9
16670	PLATE-29	1A006856	PLATE-2	1A009593	PLATE-9
16670	PLATE-30	1A006858	PLATE-9	1A009606	PLATE-16
177559	PLATE-33	1A006877	PLATE-8	1A009621R	PLATE-4
180431	PLATE-32	1A006899	PLATE-6	1A009702	PLATE-16
18630	PLATE-30	1A006901	PLATE-6	1A009762	PLATE-8
190462	PLATE-24	1A006970	PLATE-12	1A009779	PLATE-14
196302	PLATE-32	1A006988	PLATE-10	1A010001	PLATE-11
196302	PLATE-33	1A007026	PLATE-2	1A010016	PLATE-12
197071	PLATE-36	1A007028	PLATE-2	1A010035	PLATE-12
1A000024	PLATE-11	1A007029	PLATE-12	1A010109	PLATE-16
1A000542	PLATE-17	1A007047	PLATE-8	1A010119	PLATE-13
1A000612	PLATE-2	1A007051	PLATE-14	1A010166	PLATE-12
1A000612	PLATE-14	1A007152	PLATE-41	1A010172	PLATE-16
1A000708	PLATE-9	1A007152	PLATE-37	1A010185	PLATE-16
1A000708	PLATE-13	1A007153	PLATE-20	1A010208	PLATE-13
1A000831	PLATE-11	1A007489	PLATE-20	1A010461	PLATE-13
1A001073	PLATE-10	1A007501	PLATE-14	1A010540	PLATE-13
1A001073	PLATE-12	1A007565	PLATE-6	1A010548	PLATE-13
1A001794	PLATE-19	1A007605	PLATE-14	1A010632	PLATE-14
1A001795	PLATE-19	1A007635	PLATE-20	1A010720	PLATE-2
1A002358	PLATE-6	1A007663R	PLATE-2	1A011066	PLATE-3
1A002685	PLATE-2	1A007664R	PLATE-2	1A011217	PLATE-2
1A002691	PLATE-11	1A007774	PLATE-2	1A011246	PLATE-2
1A003509	PLATE-15	1A008077	PLATE-13	1A011407	PLATE-19
1A003649	PLATE-15	1A008397	PLATE-6	1A011438	PLATE-16
1A003720	PLATE-15	1A008547	PLATE-14	1A011500	PLATE-8
1A004221	PLATE-17	1A008559	PLATE-2	1A011524	PLATE-16
1A004222	PLATE-17	1A008804	PLATE-14	1A011778	PLATE-14
1A004223	PLATE-17	1A008804	PLATE-36	1A011940	PLATE-13
1A004224	PLATE-17	1A008823	PLATE-2	1A012150	PLATE-13
1A004225	PLATE-17	1A009093	PLATE-14	1A012151	PLATE-13
1A004807	PLATE-14	1A009137	PLATE-15	1A012152	PLATE-13
1A005176	PLATE-14	1A009270	PLATE-11	1A012153	PLATE-13
1A005178	PLATE-12	1A009302	PLATE-10	1A012154	PLATE-13
1A006115	PLATE-12	1A009527	PLATE-16	1A012155	PLATE-13
1A006545	PLATE-7	1A009554	PLATE-20	1A012156	PLATE-13
1A006592	PLATE-20	1A009586	PLATE-9	1A012157	PLATE-13
1A006593	PLATE-20	1A009587	PLATE-9	1A012158	PLATE-13
1A006701	PLATE-12	1A009588	PLATE-9	1A012159	PLATE-13

119

Print Date: 05-Oct-2022

PART NO	BLOCK	PART NO	BLOCK	PART NO	BLOCK
1A012160	PLATE-13	1A021039R	PLATE-18	20106	PLATE-25
1A012161	PLATE-13	1A021204	PLATE-9	20106	PLATE-27
1A012181	PLATE-12	1A022934R	PLATE-8	20106	PLATE-36
1A012182	PLATE-12	1B002848	PLATE-26	20108	PLATE-38
1A012334	PLATE-12	1B002953	PLATE-26	20108	PLATE-42
1A012845	PLATE-13	1D000671R	PLATE-42	20108	PLATE-20
1A012846	PLATE-12	1D000698	PLATE-15	20108	PLATE-21
1A012925	PLATE-5	1D001138	PLATE-8	20108	PLATE-21
1A013013	PLATE-6	1D001157	PLATE-15	20108	PLATE-21
1A013159	PLATE-10	1D001158	PLATE-15	20108	PLATE-22
1A013633	PLATE-14	1D001198	PLATE-15	20108	PLATE-22
1A013636	PLATE-14	1D001846	PLATE-10	20108	PLATE-23
1A014335	PLATE-18	1D001894	PLATE-7	20108	PLATE-23
1A014452	PLATE-20	1D001894	PLATE-19	20110	PLATE-45
1A014508	PLATE-17	1D002080	PLATE-10	20110	PLATE-46
1A014871	PLATE-12	1D002701	PLATE-26	20110	PLATE-23
1A014872	PLATE-12	1D003477	PLATE-26	20110	PLATE-32
1A014873	PLATE-12	1E002675	PLATE-26	20110	PLATE-32
1A014874	PLATE-12	1E002748	PLATE-37	20110	PLATE-33
1A014957	PLATE-15	1E002749	PLATE-37	20110	PLATE-33
1A014958	PLATE-15	1E002771	PLATE-31	20359	PLATE-33
1A014959	PLATE-15	1E002772	PLATE-31	21118	PLATE-12
1A015022	PLATE-15	20104	PLATE-21	21118	PLATE-33
1A015287	PLATE-19	20104	PLATE-24	216369	PLATE-26
1A015692	PLATE-6	20105	PLATE-41	216369	PLATE-27
1A015812	PLATE-15	20105	PLATE-42	220575	PLATE-14
1A015812	PLATE-16	20105	PLATE-42	224644	PLATE-26
1A016737	PLATE-8	20105	PLATE-42	226596	PLATE-33
1A016964	PLATE-14	20105	PLATE-22	226596	PLATE-33
1A016964	PLATE-2	20105	PLATE-24	226661	PLATE-33
1A017112	PLATE-12	20105	PLATE-25	226661	PLATE-33
1A017410	PLATE-18	20105	PLATE-25	226662	PLATE-33
1A017558	PLATE-19	20105	PLATE-30	226662	PLATE-33
1A017559	PLATE-19	20106	PLATE-42	229524	PLATE-38
1A017560	PLATE-19	20106	PLATE-42	231370	PLATE-23
1A017605	PLATE-4	20106	PLATE-42	231370	PLATE-33
1A018038	PLATE-9	20106	PLATE-43	231370	PLATE-33
1A018094	PLATE-4	20106	PLATE-43	231370	PLATE-33
1A018212	PLATE-9	20106	PLATE-43	231370	PLATE-33
1A018524	PLATE-13	20106	PLATE-18	231370	PLATE-33
1A018642R	PLATE-9	20106	PLATE-20	231370	PLATE-34
1A019310	PLATE-15	20106	PLATE-22	237246	PLATE-33
1A020456	PLATE-9	20106	PLATE-25	237246	PLATE-33

120

Print Date: 05-Oct-2022

PART NO	BLOCK	PART NO	BLOCK	PART NO	BLOCK
2383	PLATE-42	3056	PLATE-42	31119	PLATE-42
2383	PLATE-45	3056	PLATE-42	31119	PLATE-28
2383	PLATE-18	3056	PLATE-42	31122	PLATE-22
2383	PLATE-18	3056	PLATE-43	31154	PLATE-23
2383	PLATE-20	3056	PLATE-43	432142	PLATE-2
2383	PLATE-21	3056	PLATE-22	434541	PLATE-6
2383	PLATE-22	3056	PLATE-22	434541	PLATE-16
2383	PLATE-23	3056	PLATE-25	434716	PLATE-5
2383	PLATE-23	3056	PLATE-27	435571	PLATE-4
2383	PLATE-23	3056	PLATE-34	436947	PLATE-18
2388	PLATE-22	3058	PLATE-42	478261	PLATE-13
243303R	PLATE-33	3058	PLATE-45	479986	PLATE-8
265091	PLATE-23	3058	PLATE-21	48197	PLATE-37
265091	PLATE-23	3058	PLATE-21	482335	PLATE-4
267065	PLATE-33	3058	PLATE-22	483711	PLATE-5
267065	PLATE-33	3058	PLATE-22	485655	PLATE-2
267068	PLATE-33	3058	PLATE-22	485703	PLATE-6
269755	PLATE-6	3058	PLATE-22	485703	PLATE-2
269755	PLATE-2	3058	PLATE-28	485868	PLATE-6
272178	PLATE-23	3068	PLATE-33	566545	PLATE-32
285536	PLATE-8	31054	PLATE-46	567454	PLATE-28
286328	PLATE-23	31056	PLATE-26	567456	PLATE-28
286328	PLATE-23	31057	PLATE-42	567458	PLATE-28
286328	PLATE-33	31057	PLATE-42	567461	PLATE-38
288730	PLATE-14	31057	PLATE-25	567473	PLATE-32
30074	PLATE-18	31058	PLATE-41	567498R	PLATE-39
30074	PLATE-22	31058	PLATE-42	567581	PLATE-42
30209R	PLATE-32	31058	PLATE-30	567593	PLATE-30
30242	PLATE-24	31088	PLATE-42	567690	PLATE-38
3054	PLATE-39	31088	PLATE-42	567706	PLATE-42
3054	PLATE-21	31088	PLATE-45	567899	PLATE-38
3054	PLATE-22	31088	PLATE-22	567920	PLATE-38
3054	PLATE-24	31088	PLATE-25	567920	PLATE-38
3054	PLATE-27	31088	PLATE-26	567920	PLATE-29
3054	PLATE-29	31089	PLATE-18	567990	PLATE-32
3055	PLATE-42	31089	PLATE-25	567991	PLATE-32
3055	PLATE-42	31089	PLATE-31	567992	PLATE-32
3055	PLATE-42	31089	PLATE-31	567993	PLATE-32
3055	PLATE-46	31092	PLATE-34	568095	PLATE-32
3055	PLATE-25	31116	PLATE-45	568689	PLATE-23
3055	PLATE-29	31116	PLATE-22	568692	PLATE-42
3056	PLATE-42	31118	PLATE-21	568737	PLATE-38
3056	PLATE-42	31118	PLATE-22	569160	PLATE-41

121

Print Date: 05-Oct-2022

PART NO	BLOCK	PART NO	BLOCK	PART NO	BLOCK
569165	PLATE-43	6173	PLATE-43	661925	PLATE-29
569166	PLATE-43	632056	PLATE-37	661925	PLATE-30
569177	PLATE-43	632109	PLATE-26	662571	PLATE-26
569178	PLATE-43	632158	PLATE-31	6632187Z01	PLATE-22
569197	PLATE-43	632158	PLATE-31	6650	PLATE-33
569241	PLATE-23	632184	PLATE-46	6733	PLATE-32
569241	PLATE-23	632508	PLATE-42	680166	PLATE-42
569244	PLATE-23	632508	PLATE-21	6965	PLATE-41
569244	PLATE-23	63440	PLATE-35	6965	PLATE-42
569375	PLATE-23	63440	PLATE-35	6965	PLATE-30
569377	PLATE-23	639088	PLATE-22	6A000068	PLATE-36
58273R	PLATE-6	640762	PLATE-39	6A000070	PLATE-36
587617	PLATE-33	6411	PLATE-38	6A000124	PLATE-45
587624R	PLATE-37	642032	PLATE-39	6A000158	PLATE-45
587671R	PLATE-42	642537	PLATE-19	6A000197	PLATE-31
587829	PLATE-37	642786	PLATE-16	6A000209	PLATE-31
587902	PLATE-31	643149	PLATE-19	6A000216	PLATE-45
587904	PLATE-31	643367	PLATE-19	6A000438	PLATE-26
5969	PLATE-38	643691	PLATE-29	6A000439	PLATE-26
5969	PLATE-39	643692	PLATE-37	6A000477	PLATE-26
604535	PLATE-33	643741	PLATE-33	6A000481	PLATE-46
604553	PLATE-20	643741	PLATE-33	6A000482	PLATE-45
604557	PLATE-42	643772R	PLATE-32	6A000488	PLATE-46
604603	PLATE-25	644299	PLATE-26	6A000489	PLATE-45
604717	PLATE-38	644299	PLATE-27	6A000490	PLATE-45
604756	PLATE-20	644814R	PLATE-37	6A000490	PLATE-46
604756	PLATE-20	645037	PLATE-20	6A000491	PLATE-46
604756	PLATE-21	652001	PLATE-38	6A000495	PLATE-46
604758	PLATE-32	652253R	PLATE-42	6A000495	PLATE-46
604759	PLATE-32	652253R	PLATE-21	6A000497	PLATE-46
604863	PLATE-45	652562	PLATE-21	6A000500	PLATE-45
604948	PLATE-23	660168	PLATE-46	6A000500	PLATE-27
604954	PLATE-42	660168	PLATE-20	6A000505	PLATE-45
604954	PLATE-21	660168	PLATE-21	6A000506	PLATE-45
605183	PLATE-45	660168	PLATE-22	6A000507	PLATE-45
60565	PLATE-31	660168	PLATE-29	6A000509	PLATE-45
6066	PLATE-32	661229	PLATE-37	6A000512	PLATE-45
6066	PLATE-33	661229	PLATE-37	6A000519	PLATE-45
6078	PLATE-42	661266	PLATE-33	6A000520	PLATE-45
6078	PLATE-29	661266	PLATE-33	6A000522	PLATE-45
616649	PLATE-42	661267	PLATE-33	6A000597	PLATE-44
616649	PLATE-21	661282	PLATE-33	6A000597	PLATE-46
6173	PLATE-38	661925	PLATE-27	6A000600	PLATE-46

122

Print Date: 05-Oct-2022

PART NO	BLOCK	PART NO	BLOCK	PART NO	BLOCK
6A000601	PLATE-46	6B000637	PLATE-22	6B001276NB	PLATE-21
6A000620	PLATE-45	6B000638	PLATE-22	6B001312	PLATE-45
6A000621	PLATE-45	6B000758BW	PLATE-22	6B001313	PLATE-45
6A000622	PLATE-44	6B000758BY	PLATE-22	6B001321	PLATE-45
6A000739	PLATE-45	6B000758CB	PLATE-22	6B001331ED	PLATE-22
6A000740	PLATE-45	6B000758EG	PLATE-22	6B001332ED	PLATE-22
6A000748	PLATE-45	6B000758GY	PLATE-22	6B001388	PLATE-22
6A000752	PLATE-46	6B000758NB	PLATE-22	6B001389	PLATE-22
6A000816	PLATE-26	6B000808	PLATE-22	6B001455	PLATE-22
6A000836	PLATE-46	6B000811	PLATE-22	6B001517	PLATE-22
6A000836	PLATE-26	6B000850	PLATE-45	6B001518	PLATE-22
6A000896	PLATE-26	6B000850	PLATE-46	6B001519	PLATE-22
6A000904	PLATE-46	6B000893BL	PLATE-21	6B001520	PLATE-22
6A000955	PLATE-26	6B000893BW	PLATE-21	6B001539	PLATE-22
6A001003	PLATE-46	6B000893BY	PLATE-21	6B001654	PLATE-22
6A001004	PLATE-45	6B000893CB	PLATE-21	6B001821	PLATE-22
6A001004	PLATE-46	6B000893EG	PLATE-21	6B001822	PLATE-22
6A001020	PLATE-46	6B000893GY	PLATE-21	6B001823	PLATE-22
6A001037	PLATE-45	6B000893NB	PLATE-21	6B001978	PLATE-44
6A001037	PLATE-46	6B000893WR	PLATE-21	6B001994	PLATE-28
6A001038	PLATE-45	6B000965BW	PLATE-22	6B001995	PLATE-28
6A001038	PLATE-46	6B000965BY	PLATE-22	6B001996	PLATE-28
6A001039	PLATE-45	6B000965CB	PLATE-22	6B002002	PLATE-28
6A001039	PLATE-46	6B000965EG	PLATE-22	6B002002	PLATE-28
6A001078	PLATE-45	6B000965GY	PLATE-22	6B002003	PLATE-28
6A001078	PLATE-46	6B000965NB	PLATE-22	6B002586	PLATE-30
6A001165	PLATE-45	6B001129	PLATE-22	6B002757	PLATE-30
6A001373	PLATE-36	6B001137	PLATE-22	6B002757	PLATE-30
6A001486	PLATE-45	6B001140	PLATE-22	6B002781	PLATE-22
6A001637	PLATE-31	6B001152R	PLATE-24	6B002790	PLATE-44
6A001834	PLATE-36	6B001153R	PLATE-24	6B002792	PLATE-30
6A001845	PLATE-46	6B001170	PLATE-22	6B002796	PLATE-30
6A001846	PLATE-46	6B001275BW	PLATE-21	6B002827	PLATE-30
6A001847	PLATE-46	6B001275BY	PLATE-21	6B002978	PLATE-44
6A001848	PLATE-46	6B001275CB	PLATE-21	6B002979	PLATE-44
6A001849	PLATE-46	6B001275EG	PLATE-21	6B002980	PLATE-44
6A001850	PLATE-46	6B001275GY	PLATE-21	6B002981	PLATE-44
6A001854	PLATE-45	6B001275NB	PLATE-21	6B003006	PLATE-30
6A001855	PLATE-45	6B001276BW	PLATE-21	6B003007	PLATE-30
6A001856	PLATE-45	6B001276BY	PLATE-21	6B003008	PLATE-30
6A001857	PLATE-45	6B001276CB	PLATE-21	6B003026	PLATE-29
6A001858	PLATE-45	6B001276EG	PLATE-21	6B003028	PLATE-29
6A001876	PLATE-45	6B001276GY	PLATE-21	6B003144	PLATE-30

123

Print Date: 05-Oct-2022

PART NO	BLOCK	PART NO	BLOCK	PART NO	BLOCK
6B003146	PLATE-30	6D000277	PLATE-41	74521	PLATE-32
6B003148	PLATE-30	6D000278	PLATE-41	75708	PLATE-32
6B003150	PLATE-30	6D000298	PLATE-45	8080	PLATE-29
6B003443	PLATE-29	6D000305	PLATE-42	812061656	PLATE-32
6B003870	PLATE-29	6D000305	PLATE-30	812061656	PLATE-33
6B003872	PLATE-29	6D000309	PLATE-41	829504	PLATE-15
6B003924	PLATE-22	6D000320	PLATE-29	829661	PLATE-2
6B003924R	PLATE-22	6D000322	PLATE-29	83040R	PLATE-6
6B003925	PLATE-22	6D000374	PLATE-22	83041R	PLATE-6
6B003926	PLATE-22	6D000389	PLATE-29	83054R	PLATE-5
6B003927	PLATE-22	6D000420	PLATE-40	842001600	PLATE-13
6B003928	PLATE-22	6D000421	PLATE-40	843000500	PLATE-14
6B003929	PLATE-22	6D000424	PLATE-40	843000809	PLATE-13
6B003930	PLATE-22	6D000425	PLATE-40	843307	PLATE-5
6B003931	PLATE-22	6D000426	PLATE-40	847928	PLATE-6
6B003932	PLATE-22	6D000427	PLATE-40	87067	PLATE-32
6B003932R	PLATE-22	6D000428	PLATE-40	87067	PLATE-32
6B003933	PLATE-22	6D000429	PLATE-40	872816	PLATE-19
6B003934	PLATE-22	6D000435	PLATE-40	8771	PLATE-32
6B003935	PLATE-22	6D000437	PLATE-40	884222808	PLATE-2
6C000016	PLATE-34	6D000478	PLATE-42	889302	PLATE-45
6C000041	PLATE-34	6D000479	PLATE-42	920012	PLATE-45
6C000118	PLATE-38	6D000480	PLATE-42	920088	PLATE-20
6C000190	PLATE-32	6D000481	PLATE-42	925574	PLATE-35
6C000191	PLATE-32	6D000482	PLATE-42	925581	PLATE-30
6C000231	PLATE-33	6D000544	PLATE-46	925786	PLATE-42
6C000271	PLATE-35	6D000599	PLATE-42	940028	PLATE-14
6C000272	PLATE-32	6D000755	PLATE-46	940028	PLATE-14
6C000272	PLATE-35	6D000793	PLATE-29	940066	PLATE-32
6C000312R	PLATE-34	6D000998	PLATE-41	940067	PLATE-37
6C000342	PLATE-35	6D000999	PLATE-41	940068	PLATE-37
6C000430	PLATE-32	6D001084	PLATE-26	940069	PLATE-20
6C000430	PLATE-33	6D001104	PLATE-40	940071	PLATE-20
6C000465SP	PLATE-32	6D001105	PLATE-40	940072	PLATE-20
6C000471SP	PLATE-32	6D001106	PLATE-40	940090	PLATE-22
6C000530	PLATE-33	6D001107	PLATE-40	940161	PLATE-43
6D000143R	PLATE-30	6D001113	PLATE-45	963486	PLATE-4
6D000144R	PLATE-30	6D001172	PLATE-41	AP8104614	PLATE-26
6D000145R	PLATE-30	6G000056	PLATE-29	B001301	PLATE-32
6D000146R	PLATE-30	6G000057	PLATE-29	B001315	PLATE-32
6D000265	PLATE-41	6G000124	PLATE-29	B001315	PLATE-33
6D000274	PLATE-41	7066R	PLATE-2	B001316	PLATE-32
6D000277	PLATE-41	74414	PLATE-32	B001316	PLATE-33

124

Print Date: 05-Oct-2022

PART NO	BLOCK	PART NO	BLOCK	PART NO	BLOCK
B001788	PLATE-25	B014760	PLATE-6	B018533	PLATE-7
B001789	PLATE-25	B015288	PLATE-5	B018718	PLATE-6
B002250R	PLATE-46	B015483	PLATE-6	B018853	PLATE-9
B002334	PLATE-22	B015592	PLATE-2	B018853	PLATE-13
B003002	PLATE-35	B015598	PLATE-8	B018853	PLATE-15
B003002	PLATE-35	B015943	PLATE-8	B018854	PLATE-5
B003002	PLATE-35	B016016	PLATE-16	B018946	PLATE-6
B003003	PLATE-35	B016120	PLATE-9	B019047	PLATE-11
B003003	PLATE-35	B016144	PLATE-3	B019220	PLATE-13
B003003	PLATE-35	B016148	PLATE-9	B023726R	PLATE-42
B003004	PLATE-35	B016192	PLATE-11	B023727R	PLATE-42
B003011	PLATE-35	B016368	PLATE-5	B023786R	PLATE-37
B003012	PLATE-35	B016552	PLATE-19	B023940	PLATE-34
B003014	PLATE-35	B016611	PLATE-12	B024168	PLATE-27
B003017	PLATE-35	B016620	PLATE-11	B024373	PLATE-33
B003114	PLATE-26	B016774	PLATE-6	B024373	PLATE-33
B003116	PLATE-26	B016774	PLATE-9	B024474	PLATE-21
B003116	PLATE-27	B016774	PLATE-16	B024474	PLATE-24
B003282	PLATE-27	B016822	PLATE-17	B024512	PLATE-22
B003286	PLATE-23	B016823	PLATE-17	B024516	PLATE-22
B003300	PLATE-35	B016825	PLATE-17	B024532	PLATE-29
B003300	PLATE-35	B016828	PLATE-17	B024614	PLATE-34
B003324	PLATE-35	B016829	PLATE-17	B041054	PLATE-25
B003325	PLATE-35	B016834	PLATE-17	B041089	PLATE-20
B003328	PLATE-35	B016869	PLATE-17	B041118	PLATE-22
B003330	PLATE-35	B016939	PLATE-5	B041217	PLATE-22
B003331	PLATE-35	B017113	PLATE-6	B041392	PLATE-21
B003652	PLATE-22	B017165	PLATE-6	B041397	PLATE-25
B003978	PLATE-42	B017189	PLATE-9	B041398	PLATE-25
B003978	PLATE-21	B017323	PLATE-6	B041491	PLATE-45
B006286	PLATE-45	B017323	PLATE-6	B041583	PLATE-44
B006287	PLATE-45	B017431	PLATE-6	B041583	PLATE-22
B006509	PLATE-35	B017431	PLATE-6	B041584	PLATE-44
B006509	PLATE-35	B017438	PLATE-5	B041584	PLATE-22
B008915	PLATE-32	B017456	PLATE-5	B041774	PLATE-36
B014063	PLATE-19	B017542	PLATE-17	B041787	PLATE-28
B014066	PLATE-19	B017746	PLATE-6	B041798	PLATE-26
B014555	PLATE-4	B018241	PLATE-26	B041798	PLATE-27
B014684	PLATE-5	B018242	PLATE-26	B041798	PLATE-27
B014705	PLATE-5	B018442	PLATE-15	B041852	PLATE-27
B014706	PLATE-5	B018442	PLATE-16	B041853	PLATE-26
B014732	PLATE-7	B018464	PLATE-12	B041853	PLATE-27
B014755	PLATE-2	B018464	PLATE-13	B041876	PLATE-28

125

Print Date: 05-Oct-2022

PART NO	BLOCK	PART NO	BLOCK	PART NO	BLOCK
B042063	PLATE-41	B073882GY	PLATE-25	B075697	PLATE-38
B042170	PLATE-29	B073882NB	PLATE-25	B075707	PLATE-27
B042175	PLATE-44	B074024	PLATE-28	B075716	PLATE-36
B042317	PLATE-38	B074033	PLATE-42	B075724ED	PLATE-22
B042356	PLATE-36	B074063	PLATE-25	B075732	PLATE-29
B042378	PLATE-27	B074150	PLATE-21	B075790	PLATE-27
B042390	PLATE-27	B074261	PLATE-29	B075796	PLATE-27
B042486	PLATE-2	B074262	PLATE-29	B075798	PLATE-33
B042566	PLATE-36	B074275	PLATE-29	B075807	PLATE-33
B042794	PLATE-38	B074491	PLATE-42	B075808	PLATE-33
B042802	PLATE-42	B074568	PLATE-39	B075835	PLATE-37
B042895	PLATE-42	B074593	PLATE-27	B075836	PLATE-37
B073084	PLATE-45	B074594	PLATE-22	B075838	PLATE-37
B073320R	PLATE-41	B074637	PLATE-21	B075949	PLATE-38
B073441	PLATE-20	B074657	PLATE-21	B075950	PLATE-37
B073469	PLATE-36	B074723	PLATE-26	B075960	PLATE-36
B073478R	PLATE-39	B074905	PLATE-42	B075960	PLATE-36
B073479R	PLATE-39	B074962	PLATE-27	B075966	PLATE-21
B073481R	PLATE-39	B074963	PLATE-27	B075967	PLATE-21
B073490	PLATE-42	B074970	PLATE-20	B075979	PLATE-21
B073492	PLATE-42	B074971	PLATE-20	B075989	PLATE-21
B073600	PLATE-43	B074999	PLATE-38	B075989	PLATE-21
B073601	PLATE-24	B074999	PLATE-37	B076007	PLATE-26
B073602ED	PLATE-24	B075267	PLATE-28	B076007	PLATE-37
B073626	PLATE-24	B075336	PLATE-26	B076012	PLATE-21
B073682	PLATE-43	B075337	PLATE-26	B076036	PLATE-38
B073685	PLATE-43	B075337	PLATE-27	B076036	PLATE-36
B073690	PLATE-32	B075459	PLATE-23	B076056ED	PLATE-22
B073715	PLATE-39	B075475	PLATE-38	B076057CED	PLATE-22
B073788	PLATE-37	B075485	PLATE-37	B076069	PLATE-22
B073800	PLATE-38	B075490	PLATE-37	B076078	PLATE-36
B073813	PLATE-29	B075491	PLATE-37	B076111	PLATE-20
B073814	PLATE-29	B075495	PLATE-38	B076112	PLATE-20
B073817	PLATE-31	B075505ED	PLATE-22	B076120	PLATE-30
B073848	PLATE-31	B075531ED	PLATE-22	B076142	PLATE-28
B073849	PLATE-31	B075562ED	PLATE-22	B076143	PLATE-18
B073850R	PLATE-39	B075566	PLATE-36	B076201	PLATE-45
B073852	PLATE-25	B075593	PLATE-18	B076201	PLATE-45
B073853	PLATE-25	B075595	PLATE-23	B076202	PLATE-45
B073882BW	PLATE-25	B075622	PLATE-46	B076205	PLATE-23
B073882BY	PLATE-25	B075687ED	PLATE-31	B076208	PLATE-36
B073882CB	PLATE-25	B075693	PLATE-42	B076290	PLATE-33
B073882EG	PLATE-25	B075694	PLATE-32	B076292	PLATE-33

126