Parts Catalog

Commercial Vehicle

APE AUTO DX Cls 435CC BS6 DSL

PIAGGIO VEHICLES PRIVATE LIMITED
Registered Office: Bund Garden Road ,Opp. Residency Club , Pune (India)

Print Date: 05-Oct-2022

PLATES INDEX

Sr No.	Plate Name	Plate No.	Page No.
1	ENGINE ASSY. & GEAR BOX M.T.G. PASS	1	1-2
2	CYLINDER & PISTON	2	3-4
3	CRANKSHAFT SUPPORT	3	5-6
4	PTO COVER	4	7-8
5	CYLINDER HEAD & DECOMPRESSION LEVER	5	9-10
6	OIL FILTER & PRESSURE RELIEF VALVE	6	11-12
7	OIL PAN	7	13-14
8	ROCKER ARM COVER	8	15-16
9	LUB OIL PUMP & SPEED GOVERNOR	9	17-18
10	REMOTE THROTTLE & STOP CONTROL	10	19-20
11	AIR SHROUD / FLYWHEEL / PULLEY / ELECTRIC START SYSTEM COMPONENTS	11	21-24
12	CONNECTING ROD & CRANK SHAFT	12	25-26
13	AIR CLEANER & EXHAUST MUFFLER	13	27-30
14	INJECTOR	14	31-32
15	FUEL PUMP	15	33-34
16	CAM SHAFT, PUSH ROD & ROCKER ARM	16	35-36
17	EXTERNAL FUEL FILTER & FUEL PIPES	17	37-38
18	FEED PUMP	18	39-40
19	LIQUID PRESSURISED INJECTION SYSTEM (LPIS)	19	41-42
20	AIR FILTER ASSEMBLY	20	43-44
21	FUEL TANK ASSEMBLY AND PIPES	21	45-46
22	SOLVENT SYSTEM AND LIQUID PUMP AND PIPES	22	47-48
23	ALUMINIUM CLUTCH ASSEMBLY	23	49-50
24	CLUTCH AND COVER ASSEMBLY (FOR ALUMINIUM CLUTCH)	24	51-52
25	ENGINE SIDE COVER & MAIN HOUSING	25	53-54
26	MAINSHAFT SPEEDGEAR AND CLUSTER GEAR	26	55-56
27	DIFFERENTIAL UNIT, FARE METER HOUSING, SPEEDO DRIVE	27	57-62
28	Gear Shifter Assembly	28	63-64
29	drive shaft & Wheel assly.	29	65-66
30	ENGINE SUPPORT	30	67-70

Print Date: 05-Oct-2022

PLATES INDEX

Sr No.	Plate Name	Plate No.	Page No.
31	DASHBOARD ASSEMBLY & Battery Mounting	31	71-74
32	Main frame Assly & Passenger Body & Doors Ape Auto Dx & DXL(D+3)	32	75-78
33	Windshield /Glass/ Seats/ Carpets/Mirrors &Engine Door.	33	79-82
34	Hood frame MUDGUARD	34	83-84
35	TOOLS AND WHEELS	35	85-86
36	REAR SUSPENSION	36	87-90
37	STEERING COLUMN AND FRONT SUSPENSION	37	91-94
38	HANDLE BAR AND CONTROL	38	95-98
39	BRAKE - TANDEM MASTER CYLINDER, BRAKE PIPE AND HAND BRAKES	39	99-102
40	Control Cables	40	103-104
41	Head lamp & Electrical Device	41	105-108
42	Tail Lamp & Electrical Device	42	109-114
43	Wiper motor	43	115-116
44	Wiring Harness	44	117-118
45	FRONT BRAKE ASSEMBLY SELF ADJUSTING (DIA 180 X 40 MM)	45	119-120
46	REAR BRAKE ASSEMBLY SELF ADJUSTING (DIA 180 X 40 MM)	46	121-122
47	CRANKCASE ASSEMBLY	PLATE1.1	123-124

Print Date: 05-Oct-2022

PICTORIAL PLATES INDEX

PLATE-1 **ENGINE ASSY. & GEAR BOX M.T.G. PASS**

Page No. :1-2

PLATE-2 **CYLINDER & PISTON**

Page No. :3-4

PLATE-3 **CRANKSHAFT SUPPORT**

Page No. :5-6

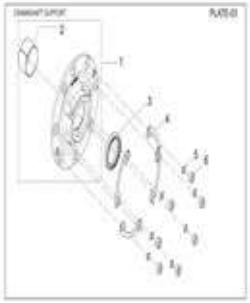

PLATE-4 **PTO COVER**

Page No. :7-8

PLATE-5 **CYLINDER HEAD & DECOMPRESSION LEVER**

Page No. :9-10

PLATE-6 **OIL FILTER & PRESSURE RELIEF VALVE**

Page No. :11-12

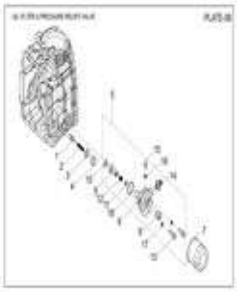

PLATE-7 **OIL PAN**

Page No. :13-14

PLATE-8 **ROCKER ARM COVER**

Page No. :15-16

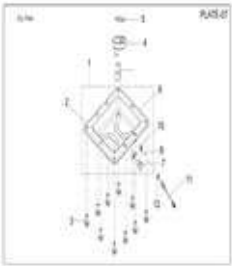

Print Date: 05-Oct-2022

PICTORIAL PLATES INDEX

PLATE-9 **LUB OIL PUMP & SPEED GOVERNOR**

Page No. :17-18

PLATE-10 **REMOTE THROTTLE & STOP CONTROL**

Page No. :19-20

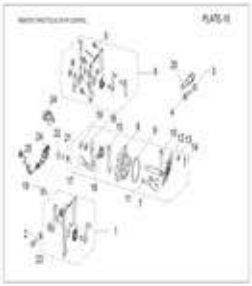

PLATE-11 **AIR SHROUD / FLYWHEEL / PULLEY / ELECTRIC START SYSTEM COMPONENTS**

Page No. :21-24

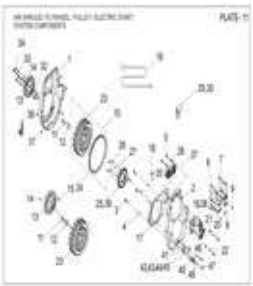

PLATE-12 **CONNECTING ROD & CRANK SHAFT**

Page No. :25-26

PLATE-13 **AIR CLEANER & EXHAUST MUFFLER**

Page No. :27-30

PLATE-14 **INJECTOR**

Page No. :31-32

PLATE-15 **FUEL PUMP**

Page No. :33-34

PLATE-16 **CAM SHAFT, PUSH ROD & ROCKER ARM**

Page No. :35-36

Print Date: 05-Oct-2022

PICTORIAL PLATES INDEX

PLATE-17 **EXTERNAL FUEL FILTER & FUEL PIPES**
Page No. :37-38

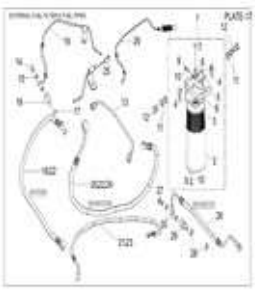

PLATE-18 **FEED PUMP**
Page No. :39-40

PLATE-19 **LIQUID PRESSURISED INJECTION SYSTEM (LPIS)**
Page No. :41-42

PLATE-20 **AIR FILTER ASSEMBLY**
Page No. :43-44

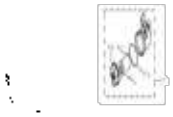

PLATE-21 **FUEL TANK ASSEMBLY AND PIPES**
Page No. :45-46

PLATE-22 **SOLVENT SYSTEM AND LIQUID PUMP AND PIPES**
Page No. :47-48

PLATE-23 **ALUMINIUM CLUTCH ASSEMBLY**
Page No. :49-50

PLATE-24 **CLUTCH AND COVER ASSEMBLY (FOR ALUMINIUM CLUTCH)**
Page No. :51-52

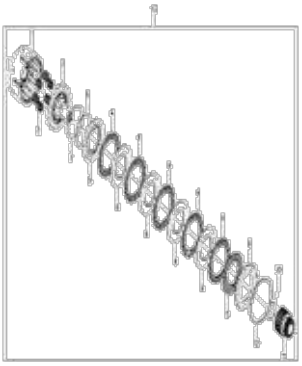

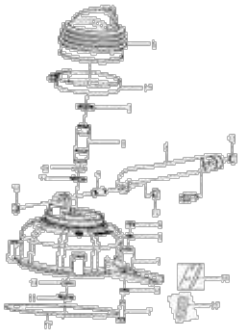

Print Date: 05-Oct-2022

PICTORIAL PLATES INDEX

PLATE-25 **ENGINE SIDE COVER & MAIN HOUSING**
Page No. :53-54

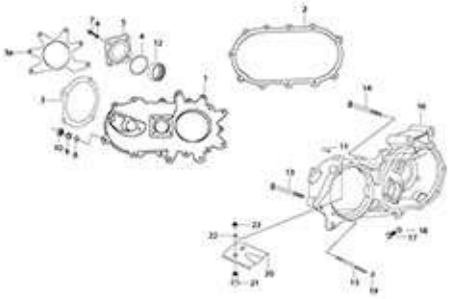

PLATE-26 **MAINSHAFT SPEEDGEAR AND CLUSTER GEAR**
Page No. :55-56

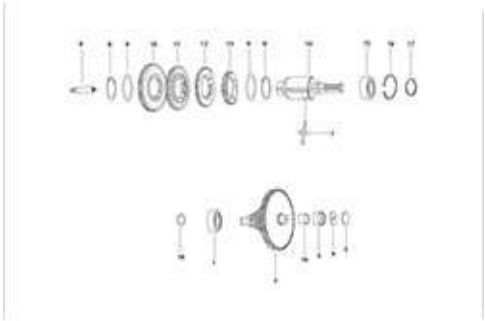

PLATE-27 **DIFFERENTIAL UNIT, FARE METER HOUSING, SPEEDO DRIVE**
Page No. :57-62

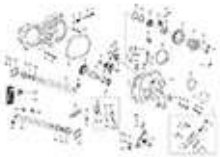

PLATE-28 **Gear Shifter Assembly**
Page No. :63-64

PLATE-29 **drive shaft & Wheel assly.**
Page No. :65-66

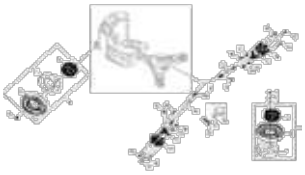

PLATE-30 **ENGINE SUPPORT**
Page No. :67-70

PLATE-31 **DASHBOARD ASSEMBLY & Battery Mounting**
Page No. :71-74

PLATE-32 **Main frame Assly & Passenger Body & Doors Ape Auto Dx & DXL(D+3)**
Page No. :75-78

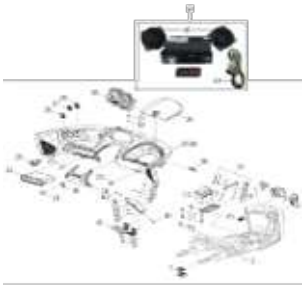

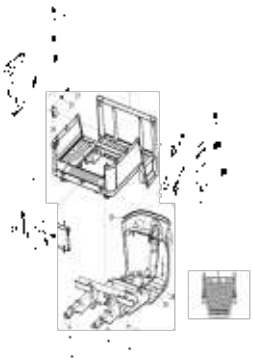

Print Date: 05-Oct-2022

PICTORIAL PLATES INDEX

PLATE-33 **Windshield /Glass/ Seats/ Carpets/Mirrors &Engine Door.**

Page No. :79-82

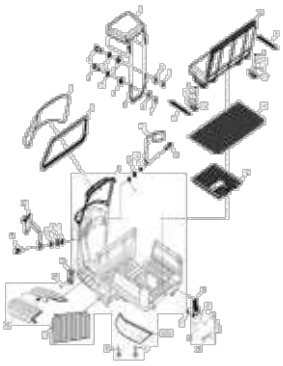

PLATE-34 **Hood frame MUDGUARD**

Page No. :83-84

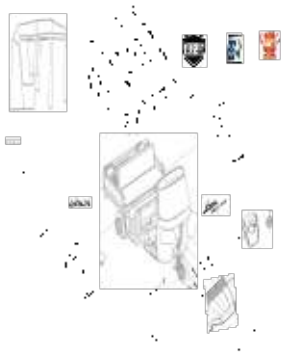

PLATE-35 **TOOLS AND WHEELS**

Page No. :85-86

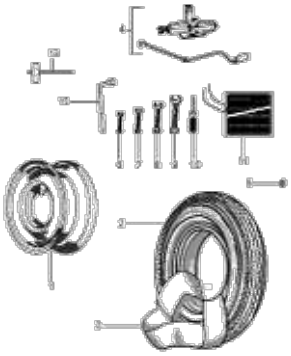

PLATE-36 **REAR SUSPENSION**

Page No. :87-90

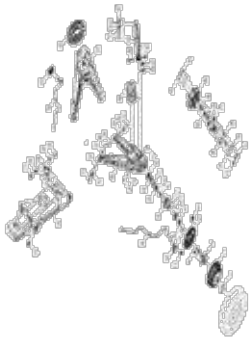

PLATE-37 **STEERING COLUMN AND FRONT SUSPENSION**

Page No. :91-94

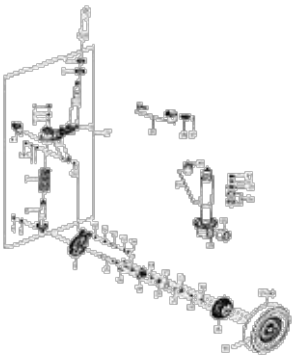

PLATE-38 **HANDLE BAR AND CONTROL**

Page No. :95-98

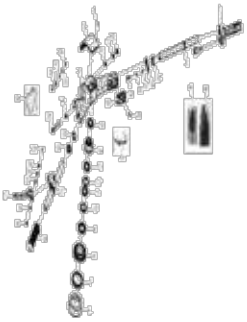

PLATE-39 **BRAKE - TANDEM MASTER CYLINDER, BRAKE PIPE AND HAND BRAKES**

Page No. :99-102

PLATE-40 **Control Cables**

Page No. :103-104

Print Date: 05-Oct-2022

PICTORIAL PLATES INDEX

PLATE-41 **Head lamp & Electrical Device**

Page No. :105-108

PLATE-42 **Tail Lamp & Electrical Device**

Page No. :109-114

PLATE-43 **Wiper motor**

Page No. :115-116

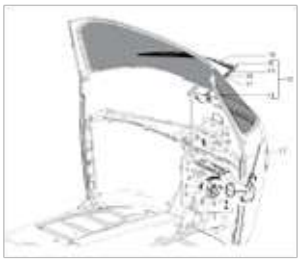

PLATE-44 **Wiring Harness**

Page No. :117-118

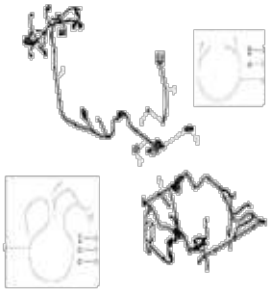

PLATE-45 **FRONT BRAKE ASSEMBLY SELF ADJUSTING (DIA 180 X 40 MM)**

Page No. :119-120

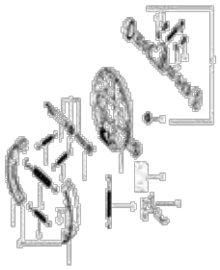

PLATE-46 **REAR BRAKE ASSEMBLY SELF ADJUSTING (DIA 180 X 40 MM)**

Page No. :121-122

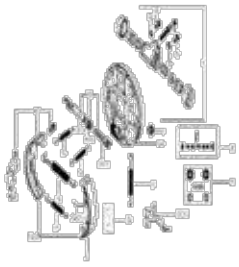

PLATE1.1 **CRANKCASE ASSEMBLY**

Page No. :123-124

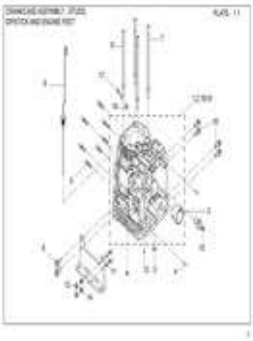

Print Date: 05-Oct-2022

PLATE-1

ENGINE ASSY. & GEAR BOX M.T.G. PASS

ENGINE ASSEMBLY & GEAR BOX MOUNTING

PLATE-01

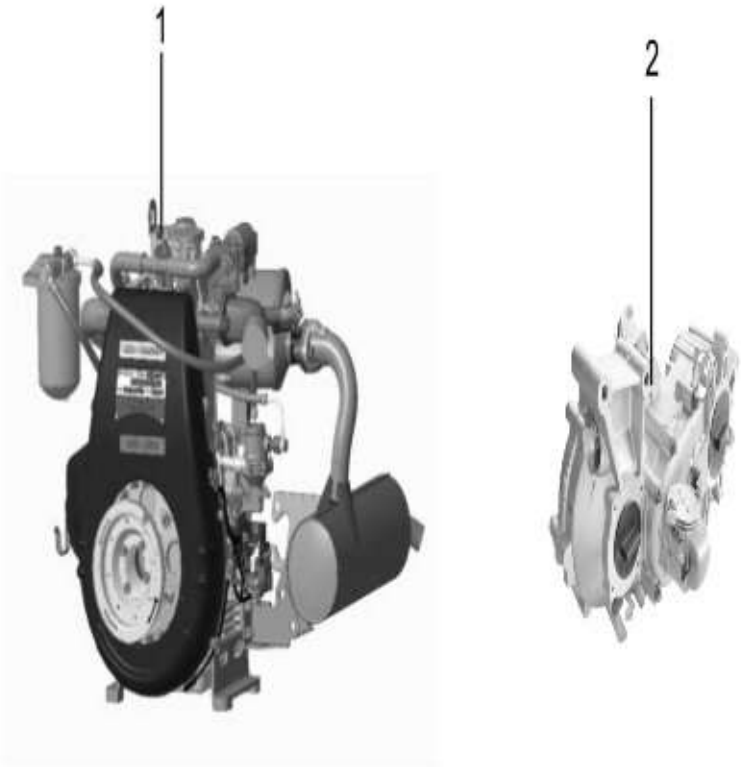

10

1

Print Date: 05-Oct-2022

PLATE-1

ENGINE ASSY. & GEAR BOX M.T.G. PASS

Fig. No.	Part No.	Description	Qty	Remarks
1	6A002176	ENGINE ASSEMBLY CLS DIESEL BSVI	1	
2	B076830	GB EXT.MTG.(W/O CLUTCH ASSLY) PASS. STD	1	

2

Print Date: 05-Oct-2022

PLATE-2
CYLINDER & PISTON

CYLINDER AND PISTON

PLATE -02

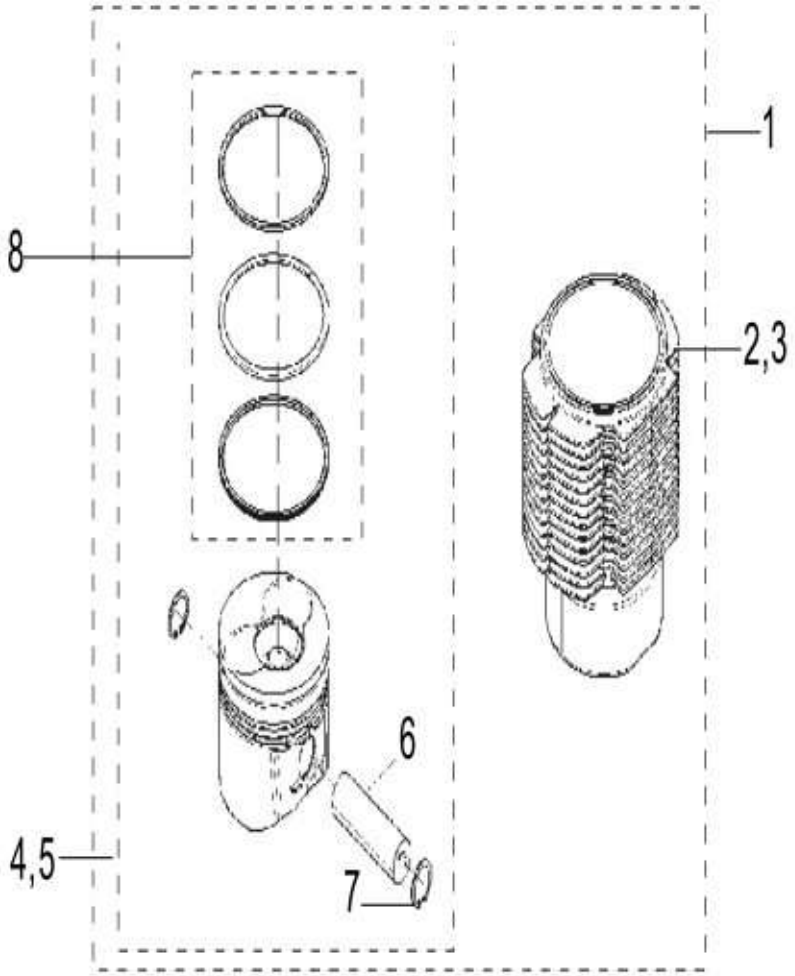

4

3

Print Date: 05-Oct-2022

PLATE-2

CYLINDER & PISTON

Fig. No.	Part No.	Description	Qty	Remarks
1	E10A050007	CYLINDER & PISTON ASSY. KIT	1	
2	E10M030002	CYLINDER GRADE A	1	EITHER GRADE A OR GRADE B
3	E10M030003	CYLINDER GRADE B	1	EITHER GRADE A OR GRADE B
4	E10A050001	PISTON ASSY. GRADE A SUITABLE FOR DIA20 PIN	1	SHOULD MATCH WITH CYLINDER, GRADE A OR GRADE B
5	E10A050002	PISTON ASSY. GRADE B	1	SHOULD MATCH WITH CYLINDER, GRADE A OR GRADE B
6	E5408480091	GUDGEON PIN	1	SHOULD MATCH WITH CYLINDER, GRADE A OR GRADE B
7	E3124017	CIRCLIP 500 SR	2	
8	E43511440	PISTON RING SET (STD)	1	

4

Print Date: 05-Oct-2022

PLATE-3
CRANKSHAFT SUPPORT

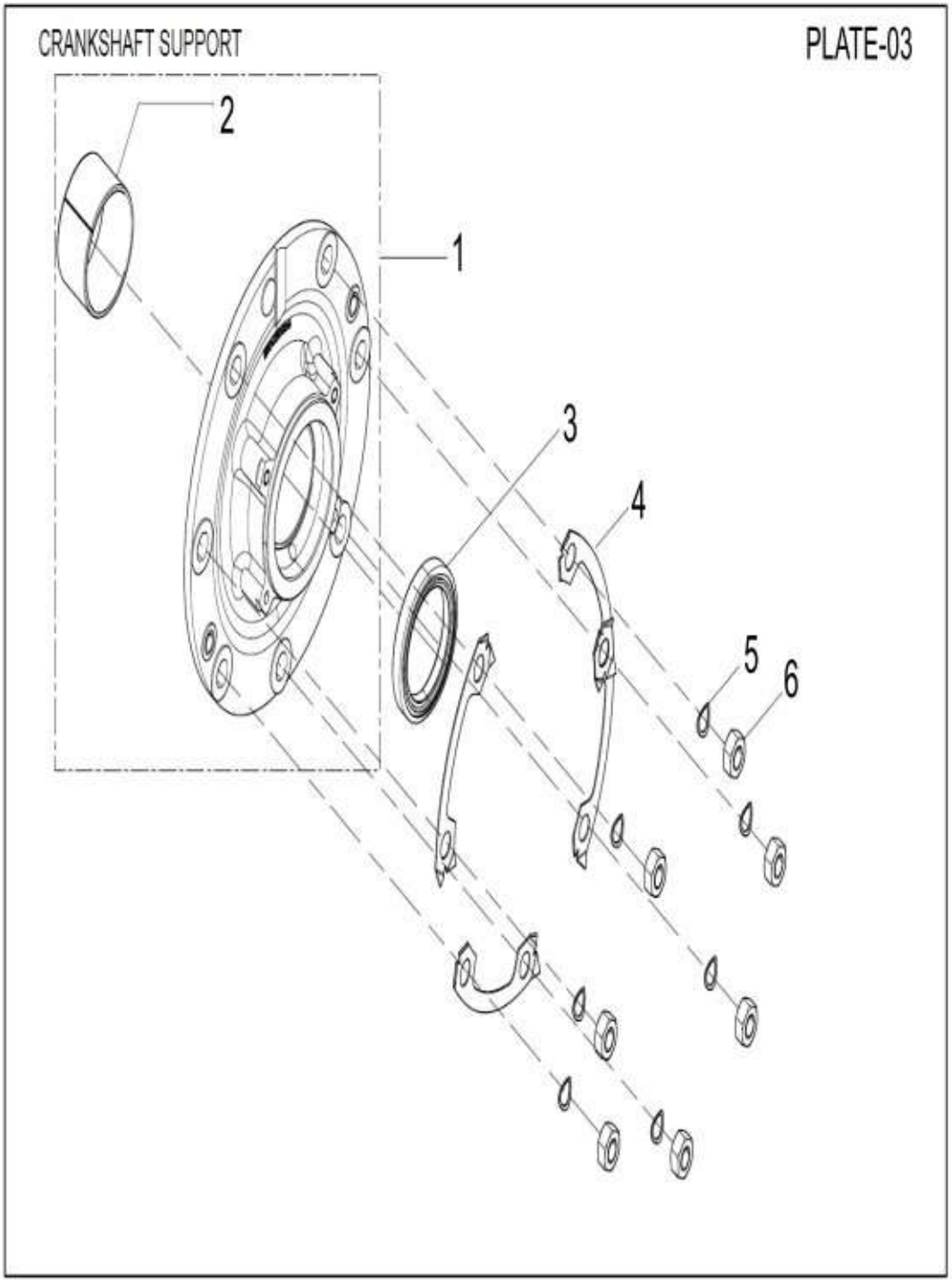

6

5

Print Date: 05-Oct-2022

PLATE-3
CRANKSHAFT SUPPORT

Fig. No.	Part No.	Description	Qty	Remarks
1	E10A110007	CRANKSHAFT SUPPORT ASSY.	1	
2	E53002206	BUSH,FWE STD.	1	
3	ED42548	OILSEAL 520/530/GL400	1	
4	E10G110020	SAFETY RETAINER	4	
5	E250755507	SPRING WASHER FOR M8	7	
6	E9324018	NUT M8 X 1.25 X 6.5	7	

6

Print Date: 05-Oct-2022

PLATE-4
PTO COVER

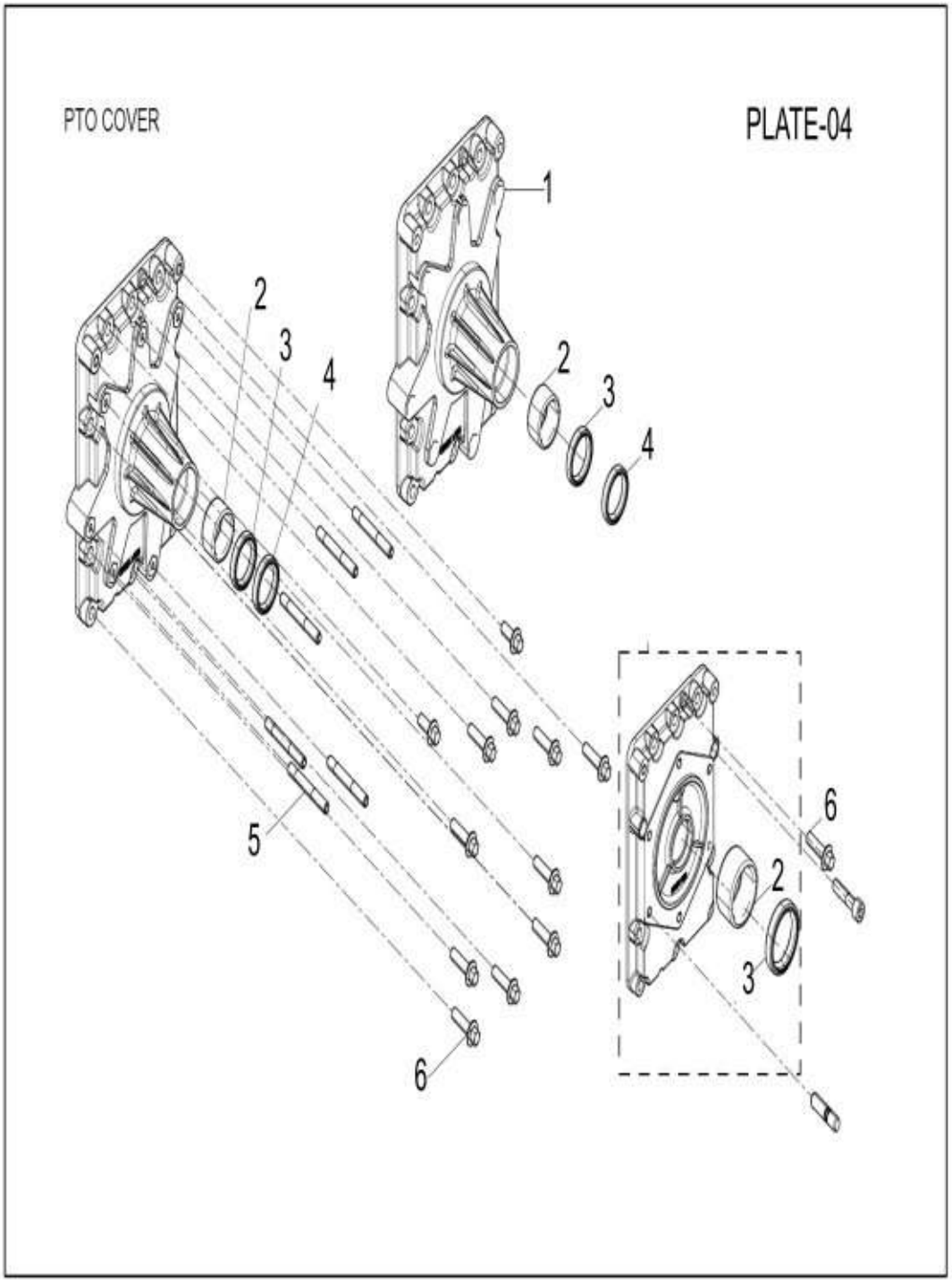

8

7

Print Date: 05-Oct-2022

PLATE-4
PTO COVER

Fig. No.	Part No.	Description	Qty	Remarks
1	E43521745	COVER PTO (SIX STUD)	1	REAR MTG APPLN
2	E90303028	BEARING NEEDLE	1	
3	E9121356	OIL SEAL	1	
4	E50006328	OIL SEAL	1	
5	E43500578	STUD-M8	6	
6	E07502804	COLLER BOLT M8 X 1.25 X 30	2	REAR MTG APPLN
7	N01A030007	PTO COVER ASSY WITH BEARING & OIL SEAL	1	

8

Print Date: 05-Oct-2022

PLATE-5

CYLINDER HEAD & DECOMPRESSION LEVER

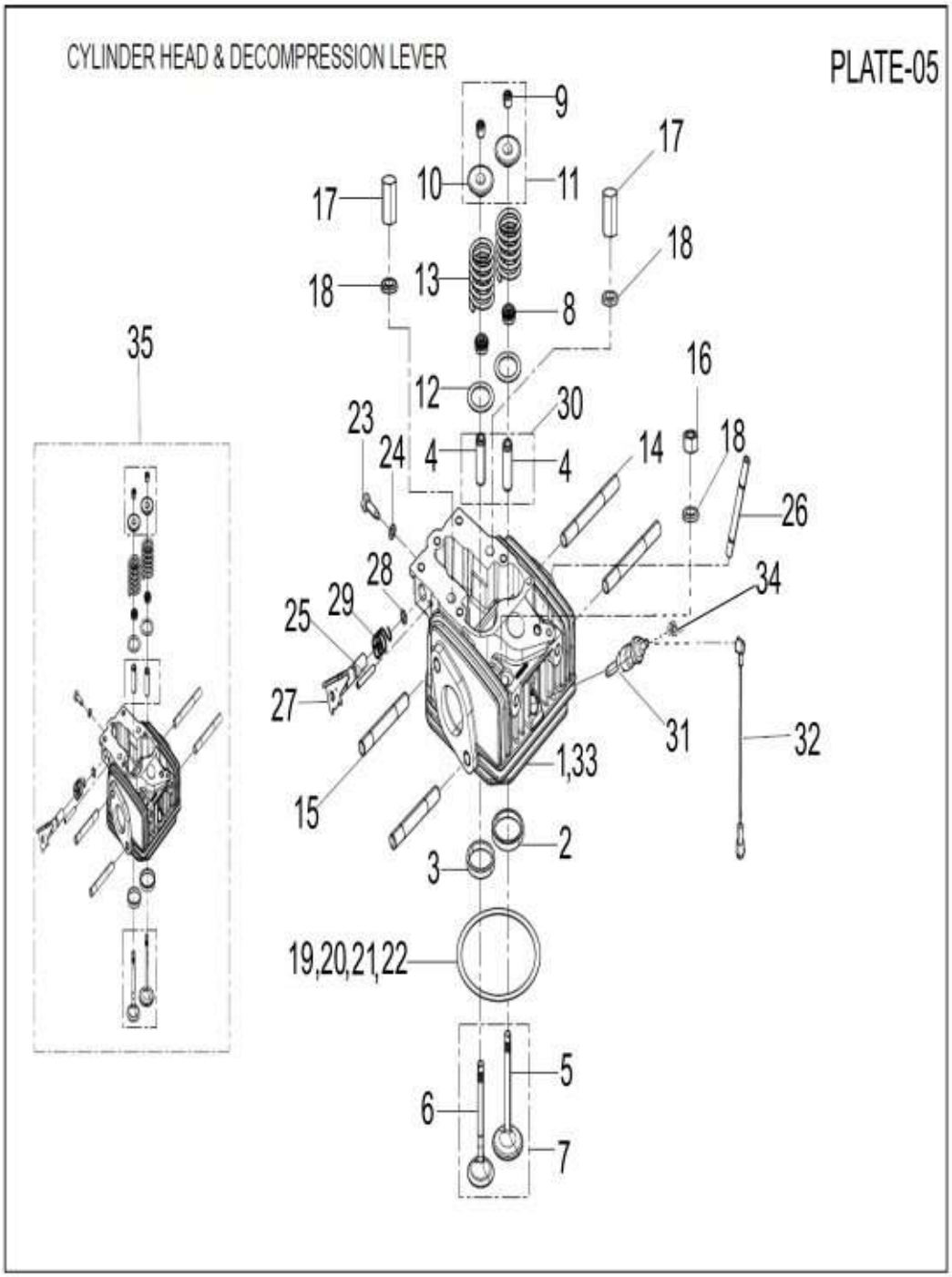
CYLINDER HEAD & DECOMPRESSION LEVER
PLATE-05
9
17
10
11
17
18
13
18
8
35
16
12
30
23
24
4
4
14
18
26
28
34
29
25
27
31
32
1,33
15
2
3
19,20,21,22
5
6
7

10

9

Print Date: 05-Oct-2022

PLATE-5

CYLINDER HEAD & DECOMPRESSION LEVER

Fig. No.	Part No.	Description	Qty	Remarks
1	EN01A020002	CYLINDER HEAD ASSLY	1	
2	E43518358	VALVE SEAT INLET (SEMI FINISH)	1	
3	E5508000118	VALVE SEAT EXHAUST	1	
4	E43512266	VALVE GUIDE - INLET - FINISH	2	
5	E43518363	INLET VALVE	1	NS
6	ED33454	EXHAUST VALVE	1	NS
7	E43522238	SET OF VALVE CONSISTING OF SR. NO. 12 & 13	1	
8	E50006342	VALVE STEM SEAL	2	
9	E870022109	VALVE COLLETS (MULTY GROOVE)	4	NS
10	E500640030	SPRING RETAINER TOP	2	NS
11	E87022230	COLLET & RATAINER ASSEMBLY SET	1	
12	E5003430070	DISC	2	
13	E500575545	VALVE SPRING	2	
14	E03B020001	STUD M10X1.5-INTAKE SIDE	2	
15	E10B120002	STUD-M10X1.5 EXHAUST	2	
16	E93240076	NUT	2	
17	ED40165	DOME NUT	2	
18	E97626065	PLAIN WASHER	4	
19	E40016143	JOINT CYLINDER HEAD 0.5 MM	1	*1 No. AS REQUIRED
20	E43536107	JOINT CYL. HEAD (0.2 MM THK.)	1	*1 No. AS REQUIRED
21	E43536108	JOINT CYL. HEAD (0.3 MM THK.)	1	*1 No. AS REQUIRED
22	E43536109	JOINT CYL. HEAD (0.4 MM THK.)	1	*1 No. AS REQUIRED
23	E505193049	BOLT	1	
24	E260467001	JOINT	1	
25	E50000901	SPRING DOWEL	1	
26	E10B120001	INJECTOR STUD	1	
27	ED40580	DECOMPRESSION SHAFT ASSY.	1	
28	E268120034	O RING	1	
29	E5005680046	RETURN SPRING	1	
30	E10A060008	VALVE GUIDE SET_501 BSIV	1	
31	EN01G140001	GLOW PLUG	1	
32	EN01A190001	PIGTAIL ASSEMBLY FOR GLOW PLUG	1	
33	EN01A020001	CYLINDER HEAD ASSEMBLY	1	
34	E25324003	NUT M4X0.7	1	
35	EN01A020003	KIT PART LIST FOR CYLINDER HEAD ASSEMBLY	1	

10

Print Date: 05-Oct-2022

PLATE-6

OIL FILTER & PRESSURE RELIEF VALVE

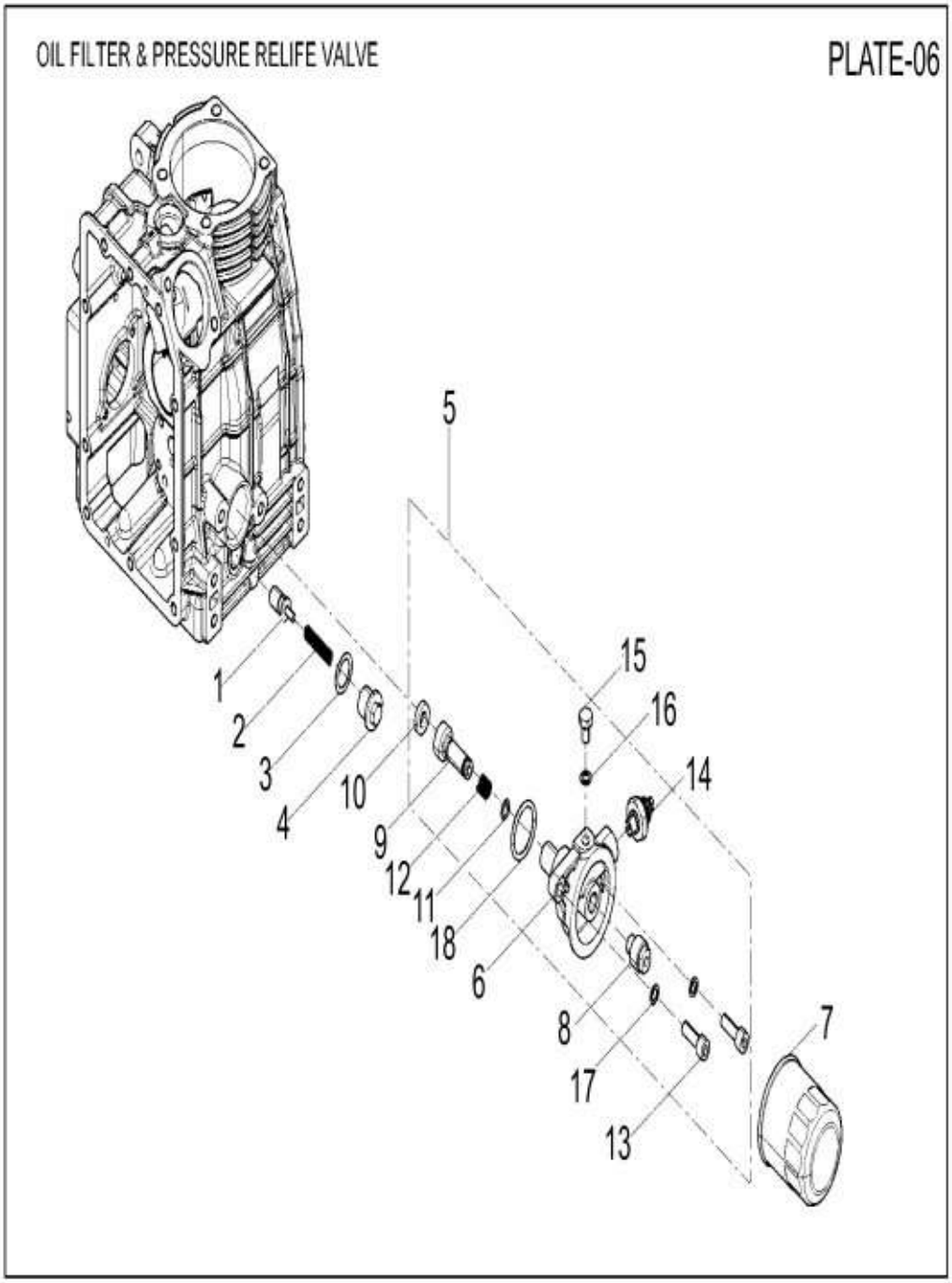
OIL FILTER & PRESSURE RELIFE VALVE
PLATE-06
5
1
2
3
4
10
9
12
11
18
6
15
16
14
8
17
13
7

14

11

Print Date: 05-Oct-2022

PLATE-6

OIL FILTER & PRESSURE RELIEF VALVE

Fig. No.	Part No.	Description	Qty	Remarks
1	E5609680013	RELIEF VALVE BODY	1	
2	E500575549	SPRING	1	
3	E200467021	JOINT	1	
4	E50000475	PLUG RELIEF VALVE	1	
5	E40001816	FLANGE ASSY. L O FILTER	1	
6	ED21235	FLANGE	1	
7	ED42244	SPIN ON LUB OIL FILTER	1	
8	ED41208	STUD	1	
9	E50006495029	PISTON	1	
10	E50001213143	O RING LUB OIL FILTER	1	
11	E50005625006	SPRING	1	
12	E904120213	O RING	1	
13	E260973027	CAP SCREW M8X 1.25	2	
14	ED41447	OIL PRESSURE SWITCH - PARALLEL THREAD	1	
15	E1177001	BOLT	1	
16	E200467003	JOINT	2	
17	E50000613	MACHINED WASHER 16X8.1X2	2	
18	E260120016	O RING	1	

12

Print Date: 05-Oct-2022

PLATE-7
OIL PAN

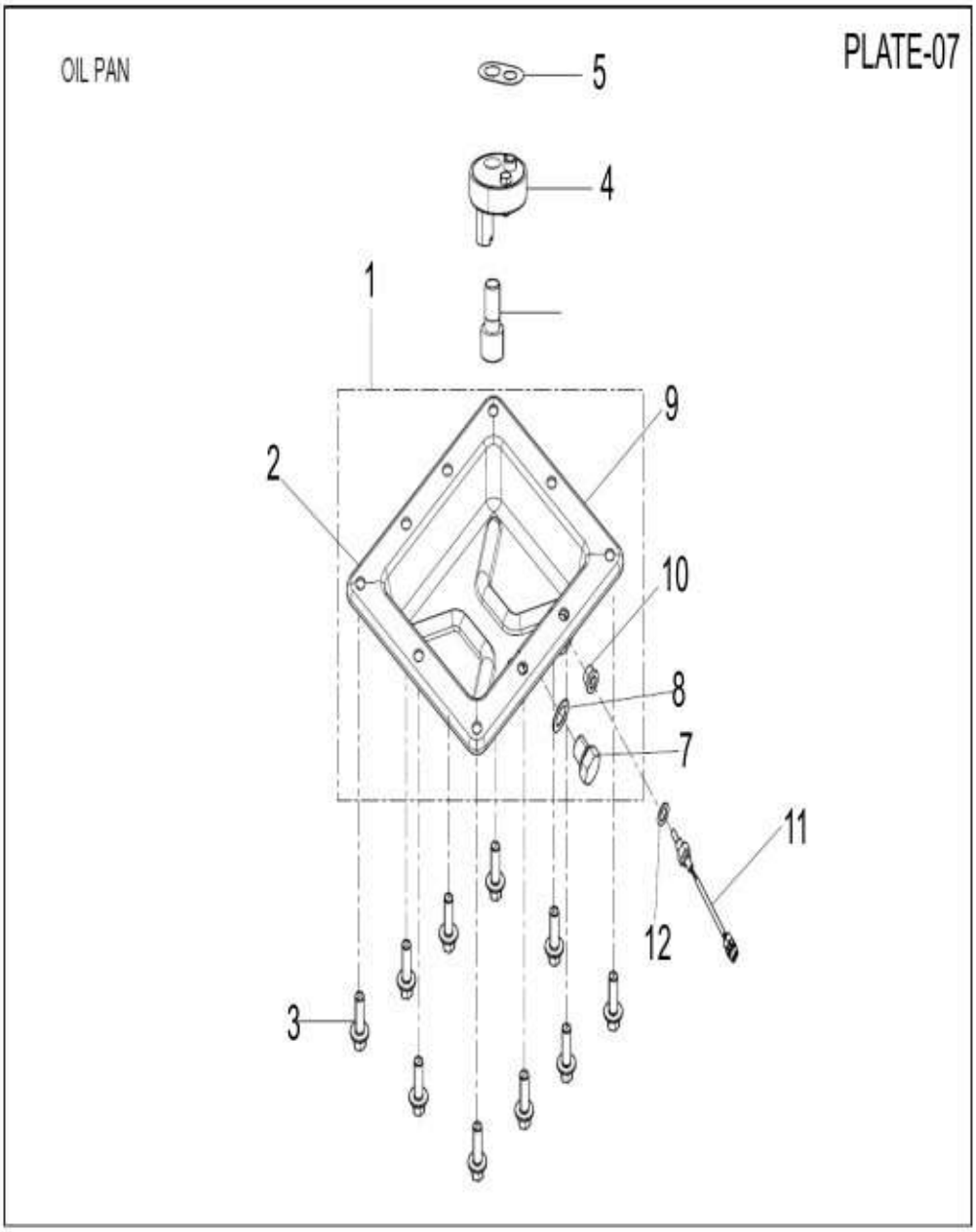

18

13

Print Date: 05-Oct-2022

PLATE-7
OIL PAN

Fig. No.	Part No.	Description	Qty	Remarks
1	EN01A090003	OIL PAN ASSEMBLY	1	
2	EN01A090004	OIL PAN ASSEMBLY WITH MTG BOSS	1	
3	E50008099	OIL PAN	1	
4	E50002805	COLLER BOLT M8 X 1.25 X 22	10	
5	E40008839	SUCTION BULB ASSY.	1	
6	E40016141	JOINT SUCTION BULB	1	
7	E99732047	SCREW FOR BULB	1	
8	E50000421	MAGNETIC DRAIN PLUG M12X1.5	1	
9	E250467014	JOINT 12X19X1(JOINT DRAIN PLUG)	1	
10	EN01G090001	BOSS TEMPERATURE SENSOR MTG	1	
11	EN01A090005	TEMPERATURE SENSOR - INEL	1	
12	E283467036	JOINT	1	

14

Print Date: 05-Oct-2022

PLATE-8

ROCKER ARM COVER

ROCKER ARM COVER

PLATE-08

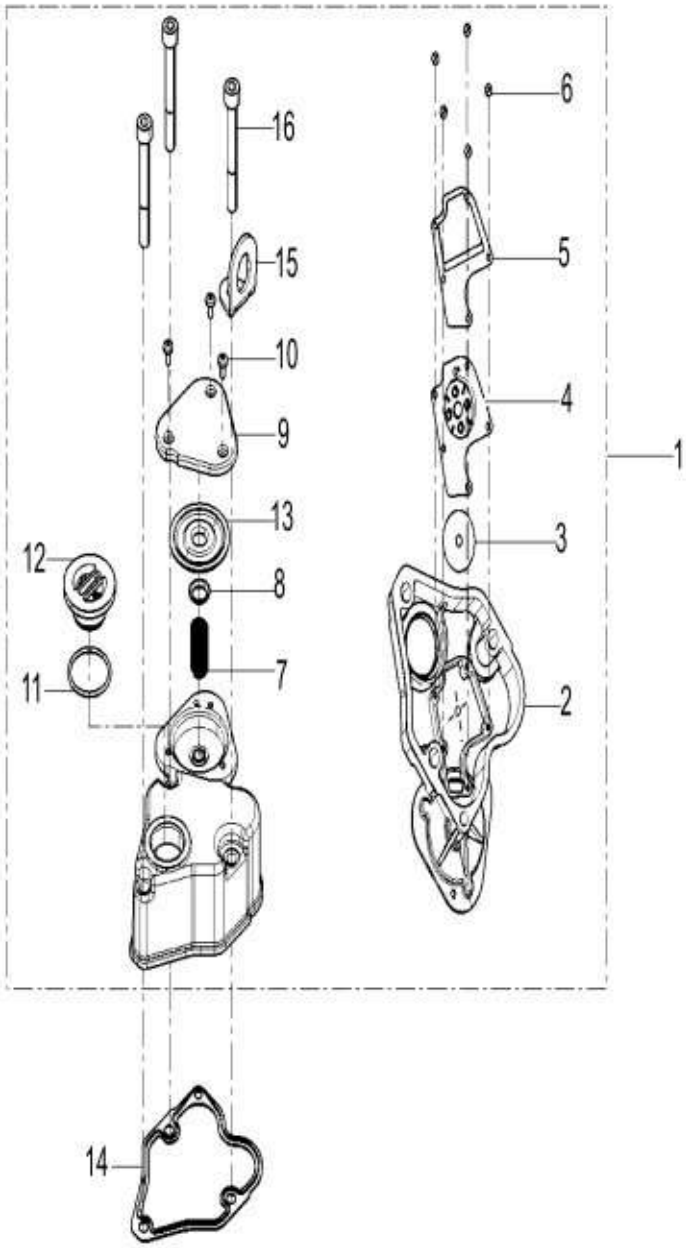

20

15

Print Date: 05-Oct-2022

PLATE-8

ROCKER ARM COVER

Fig. No.	Part No.	Description	Qty	Remarks
1	E10A110001	ROCKER BOX COVER ASSY. WITH OIL FILLING PLUG	1	
2	E10M110001	ROCKER COVER BSIV	1	
3	E1969695019	DIAPPHRAM	1	
4	E1967980064	CUP FOR FILTER	1	
5	E1965140021	SHEET STEEL	1	
6	E51981002	SCREW	5	
7	E1965755128	SPRING LM TYPE	1	
8	E1967625270	WASHER FOR SAFETY VALVE	1	
9	E10M110002	BREATHER COVER -	1	
10	ESK8694	PHILLIPS HEAD SCREW	3	
11	E91200082	O RING	1	
12	E10M110005	OIL FILLING PLUG	1	
13	ED43751	SAFETY VALVE	1	
14	E10S110001	JOINT FOR ROCKER COVER	1	
15	E904850603	LIFTING HOOK	1	
16	E50000114	BOLT (ALLEN)	3	

16

Print Date: 05-Oct-2022

PLATE-9

LUB OIL PUMP & SPEED GOVERNOR

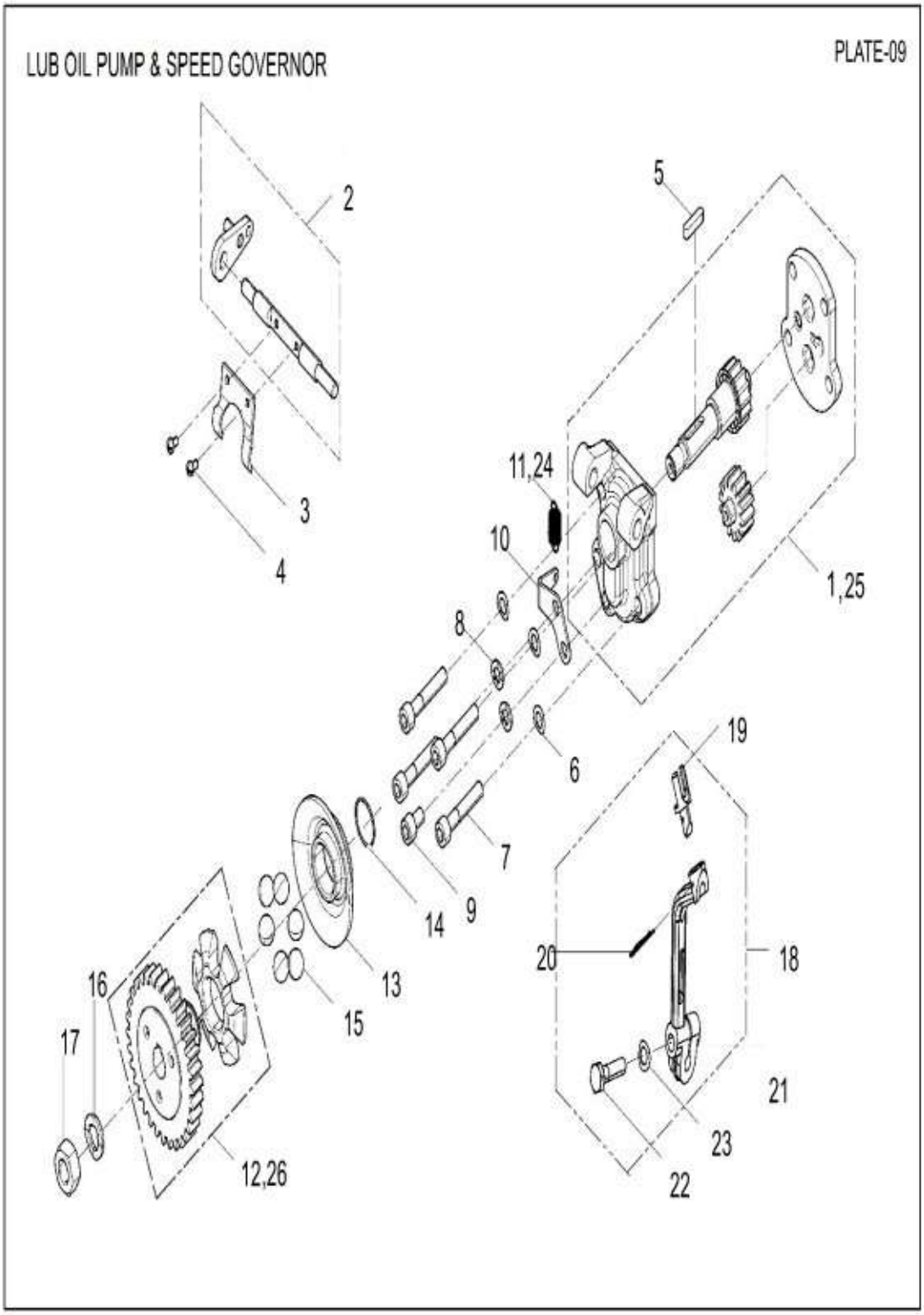
LUB OIL PUMP & SPEED GOVERNOR
PLATE-09
2
5
11,24
3
4
10
1,25
8
19
6
7
14
9
20
18
13
16
15
17
21
23
12,26
22

22

17

Print Date: 05-Oct-2022

PLATE-9

LUB OIL PUMP & SPEED GOVERNOR

Fig. No.	Part No.	Description	Qty	Remarks
1	E52006709	LUB OIL PUMP ASSY.	1	
2	ED43350	GOVERNOR LEVER ASSY.(ALTERNATIVE)	1	
3	E500520134	GOVERNOR LEVER (INLET)	1	
4	E51981002	SCREW	2	
5	E500220013	KEY	1	
6	E250755504	SPRING WASHER FOR M6	3	
7	E50000437	HEX SOCKET HEAD SCREW	4	
8	E1756504	SPRING WASHER M6- OIL SEPARATOR 2	2	
9	E264973008	CAP SCREW	1	
10	E5006371045	ANCHOR PLATE	1	
11	E5205801462	SPRING EXCESS FUEL	1	
12	E500493620	GOVERNOR GEAR	1	
13	E500208572	GOVERNOR BELL (STEEL)	1	
14	E500116011	CIRCLIP	1	
15	E3824509	BALL	6	
16	E202756511	SPRING WASHER FOR M10	1	
17	E500324066	NUT	1	
18	E10A120011	FUEL PUMP R.C. LEVER ASSY.	1	
19	E10M120023	PIN FUEL PUMP R.C. LVER	1	
20	E7102800049	SPLIT PIN	1	
21	E10M120022	FUEL PUMP R.C. LEVER ASSY	1	
22	E9176007	SCREW	1	
23	E250755504	SPRING WASHER FOR M6	1	
24	E10G140015	GOVERNOR SPRING	1	IMPROVED ENGINE(PCA) AS REQUIRED
25	E50006755	LUB OILPUMP ASSY	1	AS REQUIRED
26	E50010157	GOVERNOR GEAR	1	AS REQUIRED

18

Print Date: 05-Oct-2022

PLATE-10

REMOTE THROTTLE & STOP CONTROL

REMOTE THROTTLE & STOP CONTROL

PLATE-10

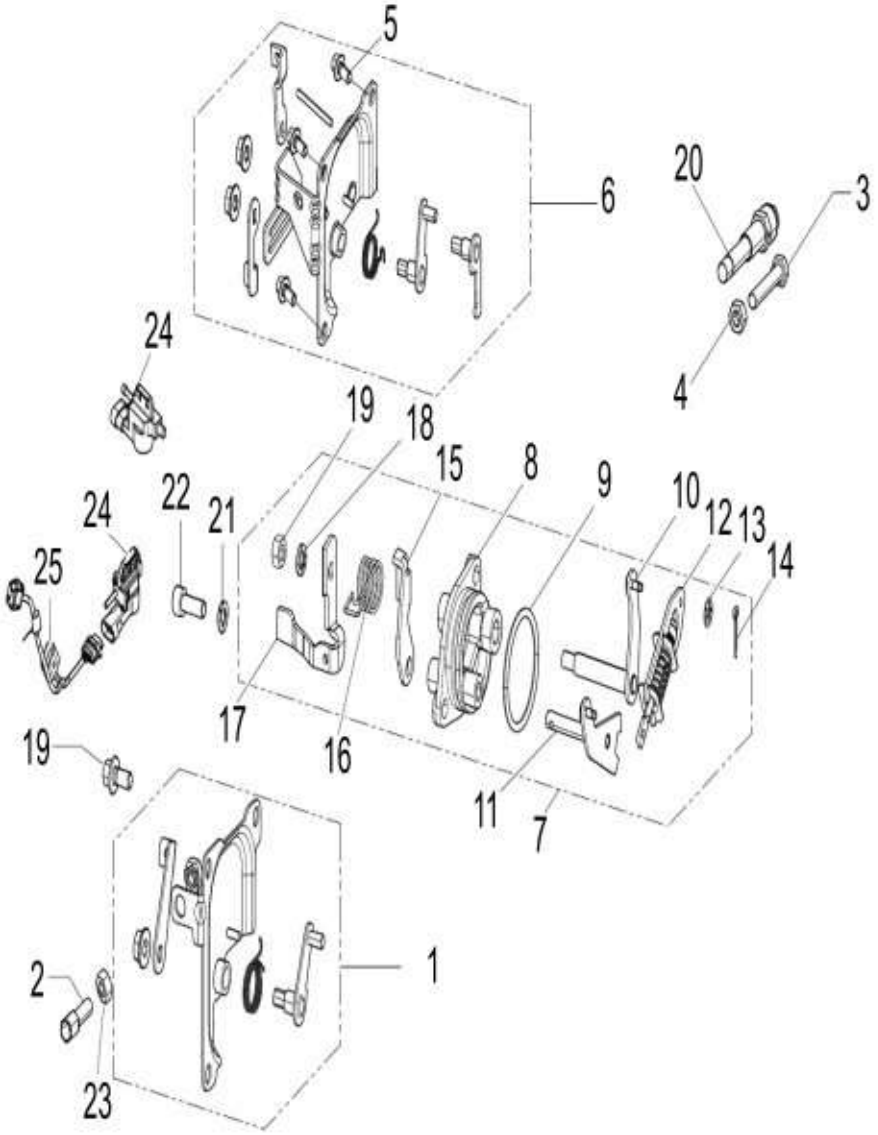

26

19

Print Date: 05-Oct-2022

PLATE-10

REMOTE THROTTLE & STOP CONTROL

Fig. No.	Part No.	Description	Qty	Remarks
1	E10A110006	REMOTE THROTTLE AND STOP CONTROL FOR REAR MTG ENGINE (2 TO 6)	1	REAR MTG APPLN
2	E50000452	TERMINAL	2	
3	E07500428	MAX SPEED SETTING SCREW	2	
4	E105324008	NUT HEX -OIL SEPARATOR MOUNTING	2	
5	E07502813	COLLOR BOLT M6 X 12	2	
6	E10A110004	THROTTLE COVER ASSY FRT MTG BSIV	1	Not Applicalbe for PVPL Engine
7	E10A120005	ASSY-GOVERNOR SUPPORT (20 TO 32) WITH CIRCLIP	1	
8	E10M120009	SUPPORT GOVERNOR LEVER	1	
9	E52006205	O RING	1	
10	E10A120008	ASSEMBLY UPPER LEVER	1	
11	E40015168	ASSEMBLY LOWER LEVER	1	
12	E40009645	GOVERNOR SPRING ASSEMBLY	1	
13	E27762505	MACHINED WASHER	2	
14	E9280003	SPLIT PIN	2	
15	ED40474	LEVER-MAX FUEL	1	
16	E500568043	SPRING	1	
17	E10G110014	THROTTLE LEVER-BSIV	1	
18	E1756504	SPRING WASHER M6- OIL SEPARATOR 2	1	
19	E105324008	NUT HEX -OIL SEPARATOR MOUNTING	1	
20	E10M120015	FUEL SETTING BOLT ASSLY	1	
21	E1756504	SPRING WASHER M6- OIL SEPARATOR 2	2	
22	E270973010	CAP SCREW (TUBE OIL ADAPTER)	2	
23	E105324008	NUT HEX -OIL SEPARATOR MOUNTING	2	
24	E10G130001	THROTTLE POSITION SENSOR (CW-TYPE)	1	
25	EN1A190003	TPS_PIGTAIL WIRING HARNESS	1	

20

Print Date: 05-Oct-2022

PLATE-11

AIR SHROUD / FLYWHEEL / PULLEY / ELECTRIC START SYSTEM COMPONENTS

AIR SHROUD / FLYWHEEL / PULLEY / ELECTRIC START SYSTEM COMPONENTS

PLATE- 11

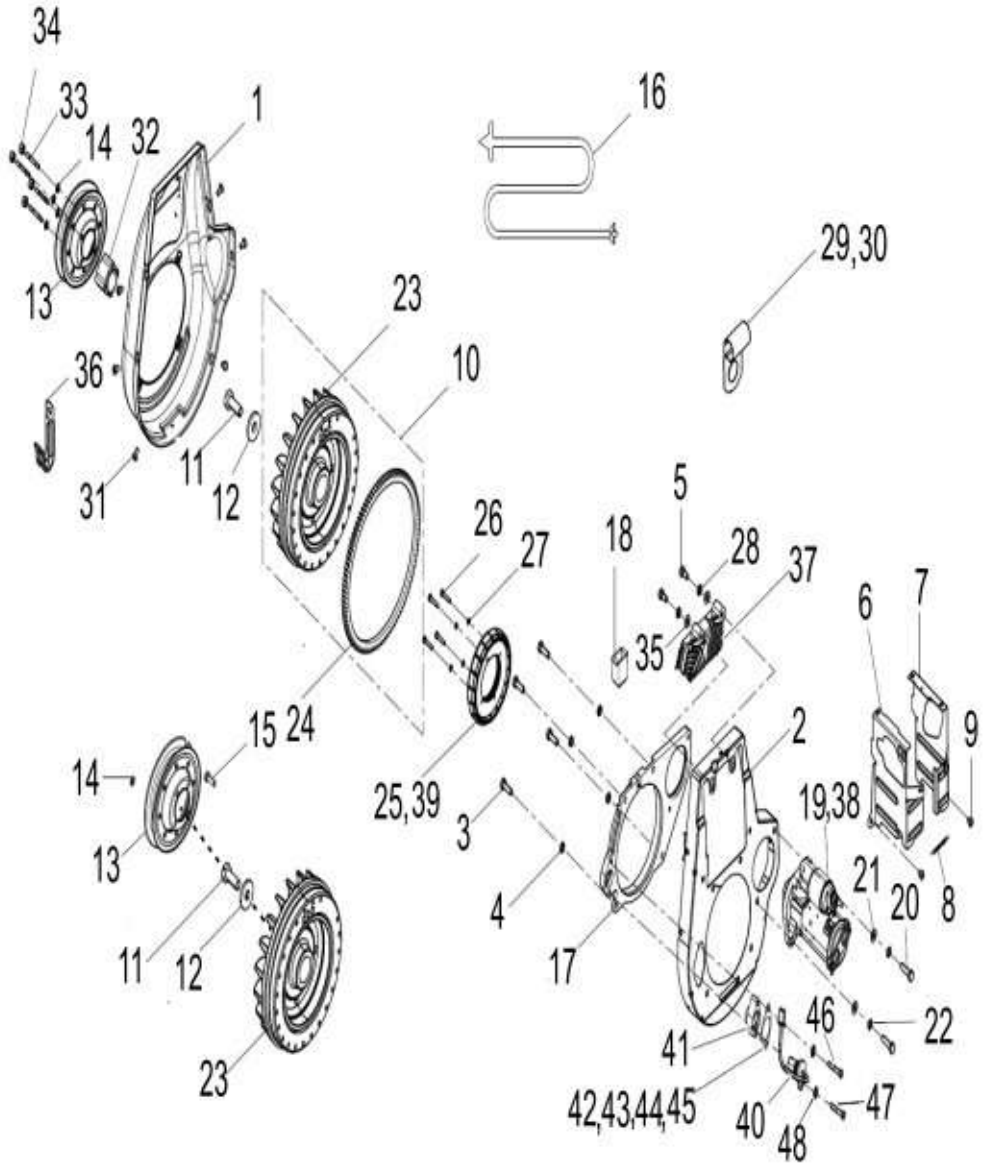

21

Print Date: 05-Oct-2022

PLATE-11

AIR SHROUD / FLYWHEEL / PULLEY / ELECTRIC START SYSTEM COMPONENTS

Fig. No.	Part No.	Description	Qty	Remarks
1	E43531743	AIR SHROUD (BLUE)	1	
2	EN01G110001	BACK PLATE	1	
3	E9177006	BOLT M8X1.25X25	4	
4	E1756507	SPRING WASHER M8	4	
5	E5177011	BOLT	2	
6	E03G100003	BAFFLE PLATE INTAKE	1	
7	E03G100001	BAFFLE PLATE EXHAUST	1	
8	E5405725043	SPRING AIR BAFFLE	1	
9	E90979037	PHILIPS SCREW	3	
10	EN01A030001	FLYWHEEL ASSY	1	
11	E52200434	SCREW HEX. HEAD M14X1.5X35 LH THREAD FLYWHEEL FIXING	1	
12	E97626043	PLAIN WASHER FLYWHEEL	1	
13	E50007626	STARTING PULLEY (SHEET METAL)	1	
14	E260756505	SPRING WASHER (FOR SHEET METAL PULLEY)	4	
15	E50000164	BOLT	4	
16	E500405518	STARTING ROPE	1	
17	EN01M010003	STARTER PLATE	1	
18	E40005592	BUSH FOR FMA CABLE	1	
19	E10G140001	STARTER MOTOR CF60	1	
20	E47177007	SCREW M8X1.25X30	2	
21	E1756507	SPRING WASHER M8	2	
22	E45762512	PLAIN WASHER	2	
23	EN01M030001	FLYWHEEL INTEGRAL	1	
24	E40009648	RING GEAR STARTER 0.7 KW (INEL FMA)	1	
25	E10G030001	STATOR	1	
26	E40020135	BOLTS FOR FMA STARTOR	4	
27	E26756503	SPRING WASHER	4	
28	E1756507	SPRING WASHER M8	2	
29	E6193361721	CLAMP	5	
30	ESK8801	CLAMP FOR PICK UP COIL	2	
31	E90979039	SCREW	6	
32	ED42246	SPACER FR PULLEY	1	
33	E40000565	STUD FOR PULLEY	4	
34	E1324010	NUT	4	
35	E45762512	PLAIN WASHER	2	

22

Print Date: 05-Oct-2022

PLATE-11

AIR SHROUD / FLYWHEEL / PULLEY / ELECTRIC START SYSTEM COMPONENTS

AIR SHROUD / FLYWHEEL / PULLEY / ELECTRIC START SYSTEM COMPONENTS

PLATE- 11

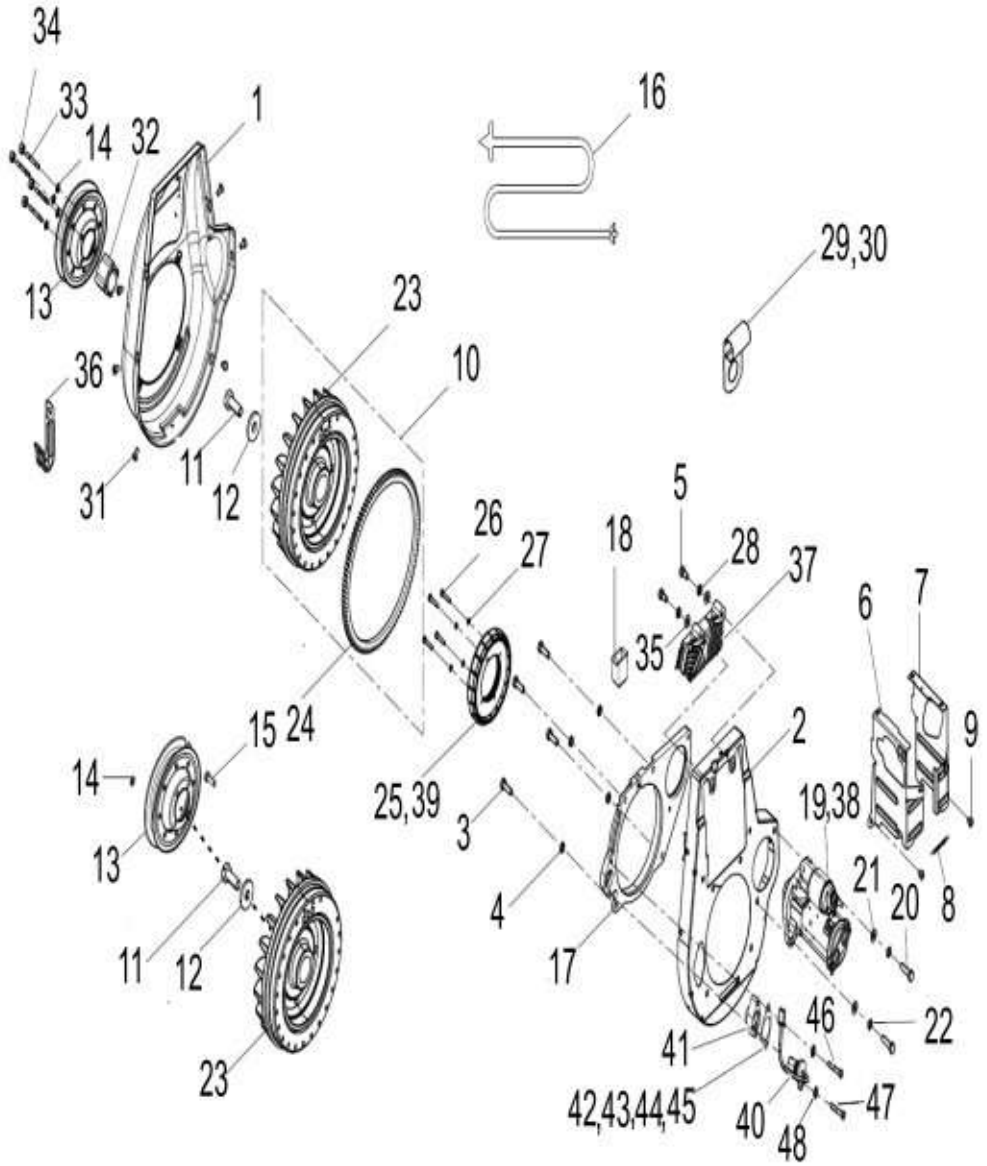

23

Print Date: 05-Oct-2022

PLATE-11

AIR SHROUD / FLYWHEEL / PULLEY / ELECTRIC START SYSTEM COMPONENTS

Fig. No.	Part No.	Description	Qty	Remarks
36	E60018078	CLAMP 501 BSIV	2	
37	E10G130018	EGR CONTROLLER-CARGO/PASS./APE CITY	1	
38	E40015406	STARTER MOTOR – 1 KW (LUCAS)	1	AS REQUIRED
39	E10G030002	STATOR (FLASH)	1	AS REQUIRED
40	EN01G180001	SPEED SENSOR	1	
41	EN01M180001	ADAPTOR STARTER PLATE	1	
42	EN01R180001	SHIM - SPEED SENSOR	1	AS REQUIRED
43	EN01R180002	SHIM - 2-SPEED SENSOR	1	AS REQUIRED
44	EN01R180003	SHIM -3- SPEED SENSOR	1	AS REQUIRED
45	EN01R180004	SHIM - 4-SPEED SENSOR	1	AS REQUIRED
46	E260176012	M6 BOLT FOR SPEED SENSOR MTG (M6X1X35)	1	
47	E50000165	M6 BOLT FOR ADAPTOR - STARTER PLATE MTG	1	
48	E1756504	SPRING WASHER M6- OIL SEPARATOR 2	2	

24

Print Date: 05-Oct-2022

PLATE-12

CONNECTING ROD & CRANK SHAFT

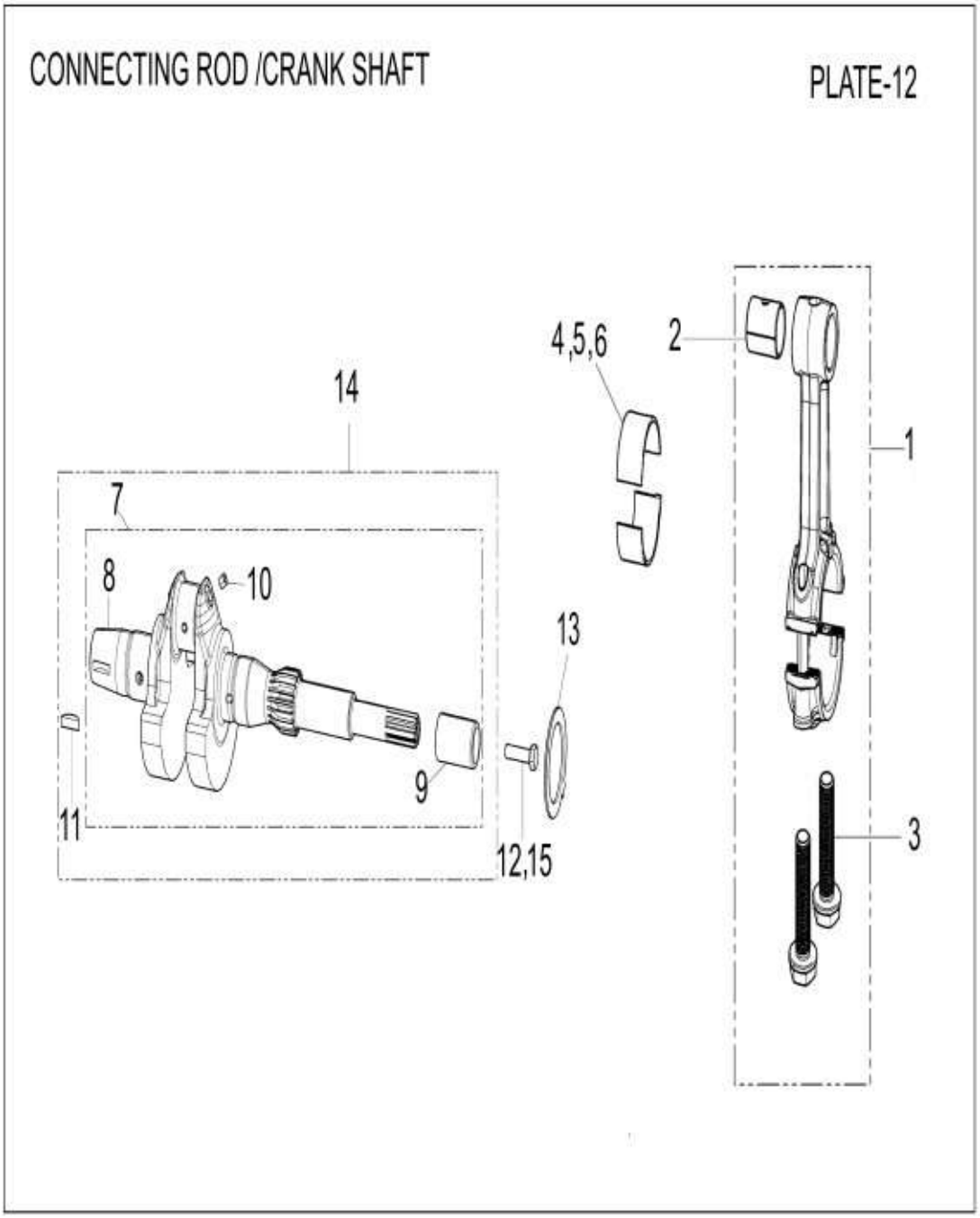
CONNECTING ROD /CRANK SHAFT
PLATE-12
14
7
8
10
11
9
12,15
13
4,5,6
2
1
3

34

25

Print Date: 05-Oct-2022

PLATE-12

CONNECTING ROD & CRANK SHAFT

Fig. No.	Part No.	Description	Qty	Remarks
1	E43509046	CONNECTING ROD ASSY - FRACTURED	1	
2	E50009205	BUSH SMALL END CON ROD	1	
3	E43520166	COLLAR BOLT M8X1 (CON ROD)	2	
4	E50002296	LARGE END BEARING WITH COPPER LED PAIR (STD)	1	
5	E40022211	LARGE END BEARING WITH COPPER LEAD (SINGLE HALF) 0.25 MM U/S	1	
6	E40022212	LARGE END BEARING (0.50MM U/S) WITH COPPER LEAD (SINGLE HALF)	1	
7	E43503011	CRANKSHAFT ASSY.	1	
8	E43516050	CRANKSHAFT MACHINING	1	REAR MTG APPLN
9	ED40208	SLEEVE DOUBLE OIL SEAL	1	REAR MTG APPLN
10	E500900038	PLUG OIL HOLE	2	
11	E500228048	KEY - F.W.E.	1	
12	E47177007	SCREW M8X1.25X30	1	REAR MTG APPLN
13	E500125708	THRUST WASHER	1	
14	E43510715	CRANKSHAFT WITH KEY CONSIST OF 8 & 12.	1	REAR MTG APPLN
15	E43520139	BOLT	1	

26

Print Date: 05-Oct-2022

PLATE-13

AIR CLEANER & EXHAUST MUFFLER

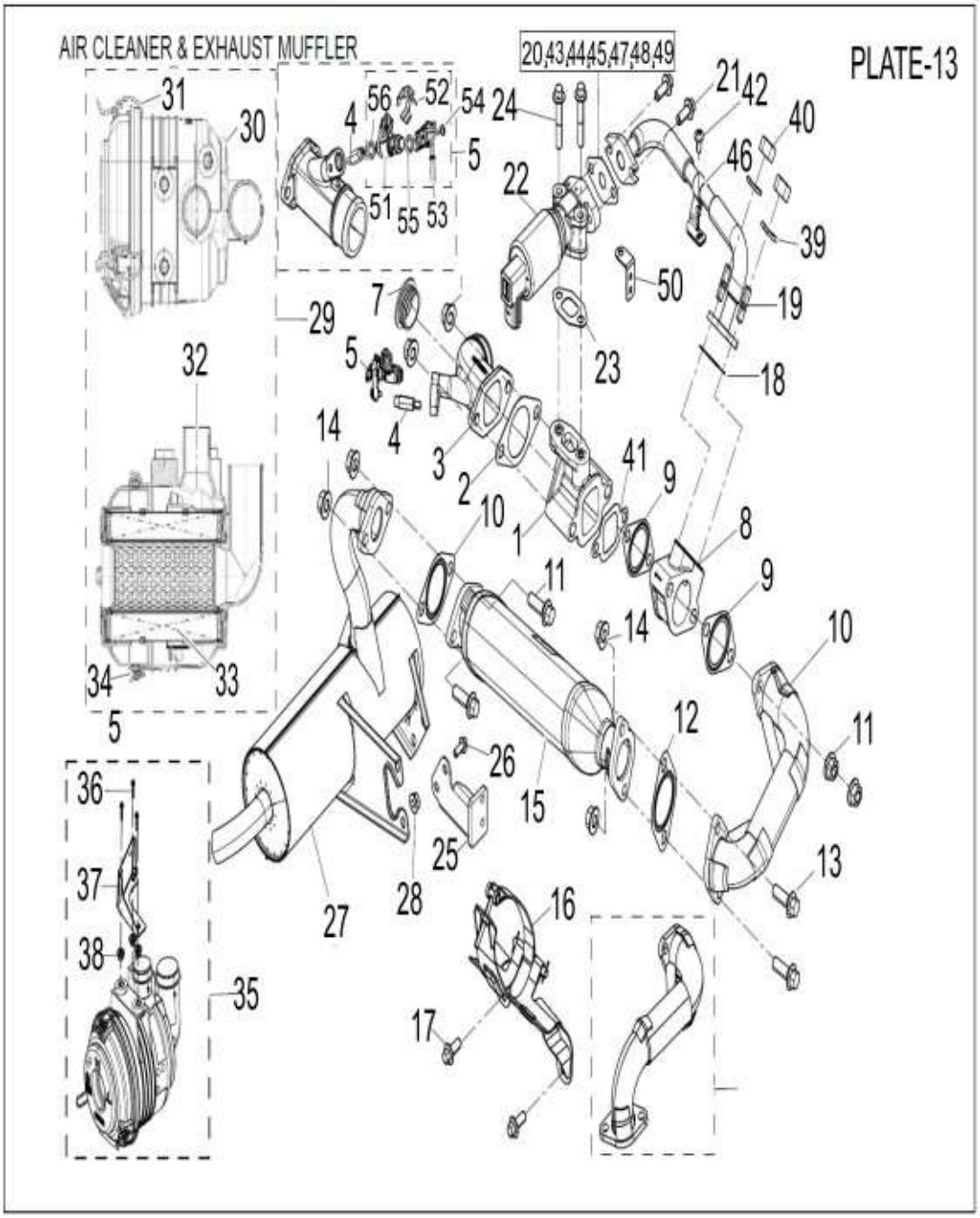
AIR CLEANER & EXHAUST MUFFLER
PLATE-13
20,43,44,45,47,48,49
31
30
56
52
54
24
21
42
40
4
5
46
22
51
55
53
39
50
19
7
29
23
32
5
18
14
4
3
2
41
9
10
1
8
11
9
14
10
34
33
5
12
11
26
36
15
25
13
37
28
27
16
38
35
17

27

Print Date: 05-Oct-2022

PLATE-13

AIR CLEANER & EXHAUST MUFFLER

Fig. No.	Part No.	Description	Qty	Remarks
1	E10M070001	FLANGE INTAKE MACHINED	1	
2	E10S070002	JOINT-INTAKE FLANGE	2	
3	EN01M200001	INTAKE MANIFOLD-MACHINED-RE	1	
4	EN01G100002	SPACER-INJECTOR MOUNTING	1	
5	EN01A130001	LIQUID INJECTOR ASSY WITH CLIP & CAP/SCR	1	
6	E07502812	COLLAR NUT M10X1.5	2	
7	E18G070003	COVER INTAKE MANIFOLD	1	
8	E10M070002	FLANGE EXHAUST MACHINED	1	
9	E03S070003	JOINT-EXHAUST FLANGE	2	
10	EN01T070001	EXHAUST PIPE ASSY. PRE CATCON	1	
11	E07502812	COLLAR NUT M10X1.5	2	
12	E87026113	GASKET EXHAUST	2	
13	E43502821	HEX HEAD FLANGE BOLT M10X1.5X30	4	
14	E07502812	COLLAR NUT M10X1.5	1	
15	EN01A210001	OXYCAT ELLIPTICAL CORNING	1	
16	EN01G070004	OXYCAT BKT	1	
17	E50002805	COLLER BOLT M8 X 1.25 X 22	2	
18	E43526150	GASKET(EXHAUST MANIFOLD-EGR PIPE)	1	
19	E40000549	STUD AIR INTAKE	2	
20	E43526149	GASKET INTAKE FLANGE	1	
21	E50002805	COLLER BOLT M8 X 1.25 X 22	2	
22	E10G070001	EGR SOLENOID VALVE (NORMALLY OFF)	1	
23	E10S070003	GASKET(EGR VALVE-EGR PIPE)	1	
24	E07502803	COLLAR BOLT ROCKER COVER M8 LIFTING HOOK SIDE	2	
25	E43520672	BRACKET-MUFFLER (ENGINE SIDE)	1	
26	E50002805	COLLER BOLT M8 X 1.25 X 22	2	
27	EN01A070003	ASSEMBLY MUFFLER	1	REAR MTG APPLN
28	E07502810	COLLAR NUT M8 X 1.25	2	
29	EN01A140002	AIR FILTER ASSY. WITHOUT BRACKET	1	
30	A01G140035	AIR FILTER COVER	1	
31	A01G140037	AIR FILTER COVER CLAMP	1	
32	A01G140013	AIR FILTER ELEMENT ASSEMBLY	1	
33	A01S140001	AIR FILTER COVER GASKET	1	
34	A01G140036	AIR FILTER DUST VALVE	1	
35	EN01A140001	AIR FILTER ASSY WITH BRACKET	1	

28

Print Date: 05-Oct-2022

PLATE-13

AIR CLEANER & EXHAUST MUFFLER

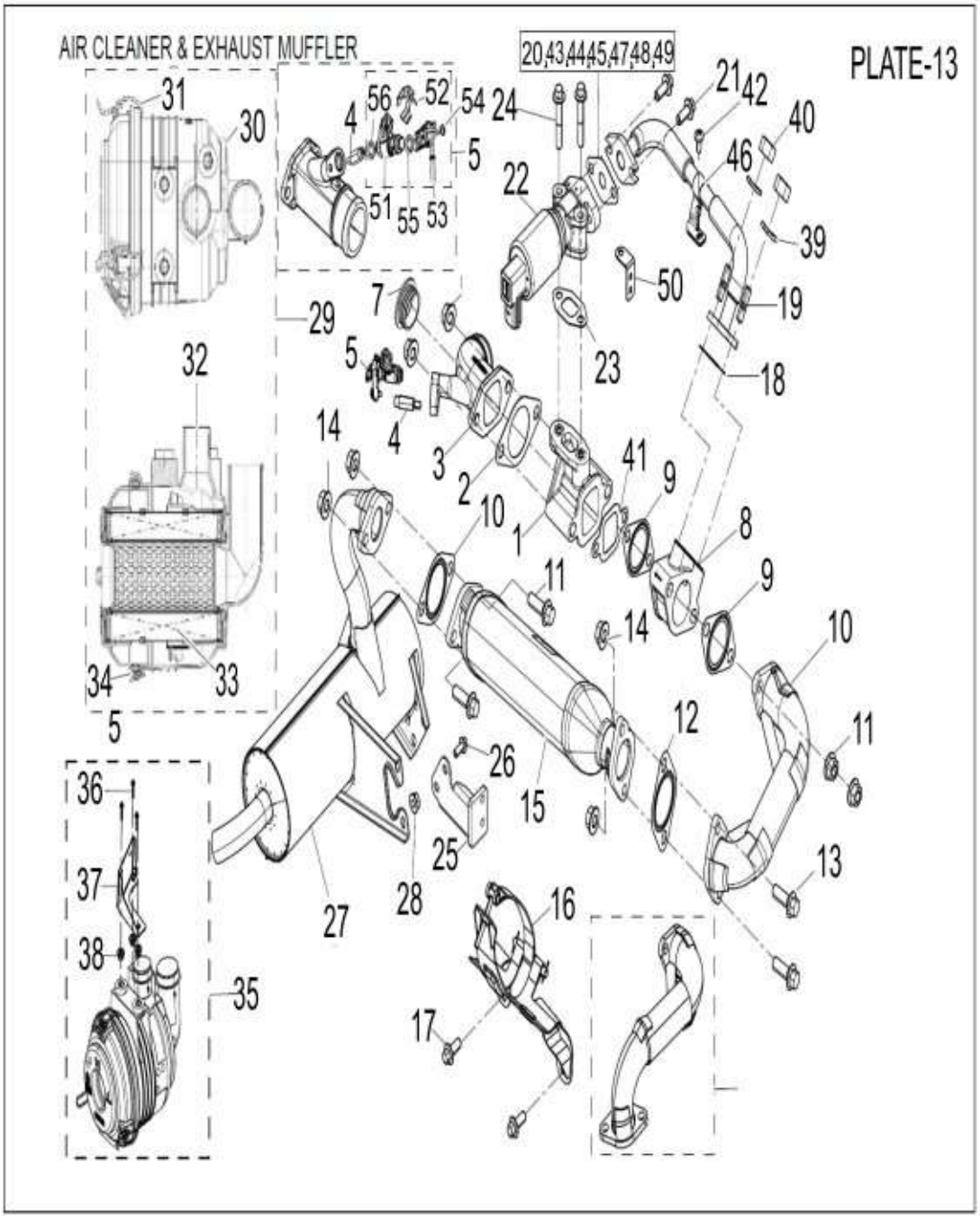
AIR CLEANER & EXHAUST MUFFLER
PLATE-13
20,43,44,45,47,48,49
31
30
56
52
54
24
21
42
40
4
5
46
22
51
55
53
39
50
19
7
29
23
18
32
5
4
14
3
2
41
9
10
1
8
11
9
14
10
34
33
5
12
11
26
36
15
25
13
37
28
27
16
38
35
17

29

Print Date: 05-Oct-2022

PLATE-13

AIR CLEANER & EXHAUST MUFFLER

Fig. No.	Part No.	Description	Qty	Remarks
36	E07502804	COLLER BOLT M8 X 1.25 X 30	3	
37	N01R070002	BRACKET AIR FILTER	1	NS
38	E07502810	COLLAR NUT M8 X 1.25	3	
39	E1756507	SPRING WASHER M8	2	
40	E45324016	NUT	2	
41	E10S070001	GASKET INTAKE MANIFOLD 435 BSIV	1	
42	E90979039	SCREW	1	
43	E10S070018	GASKET(EGR VALVE-EGR PIPE)GASKET FOR EGR	1	AS REQUIRED
44	E10S070015	GASKET FOR EGR VALVE EGR GASKET (DIA 13)	1	AS REQUIRED
45	E10S070017	GASKET FOR EGR VALVE EGR GASKET (DIA 15)	1	AS REQUIRED
46	E10T070010	EGR PIPE-FOR ALL BSIV MODEL (PCA ENGINE	1	
47	E10S070013	GASKET EGR VALVE DIA 11	1	AS REQUIRED
48	EN01S070001	GASKET EGR VALVE DIA 10	1	AS REQUIRED
49	EN01S070002	GASKET EGR VALVE DIA 9	1	AS REQUIRED
50	EN01R190001	BRACKET - W/H	1	
51	EN01K130003	LIQUID INJECTOR	1	
52	EN01R130001	CLIP - LIQUID INJECTOR	1	
53	EN01P130001	CAP - LIQUID INJECTOR	1	
54	EN01B130001	SCREW M4X0.7 LIQUID INJECTOR FITTING	1	
55	EN01S0130001	O RING INJECTOR TOP	1	
56	EN01S0130002	O RING INJECTOR BOTTOM	1	

30

Print Date: 05-Oct-2022

PLATE-14
INJECTOR

INJECTOR

PLATE-14

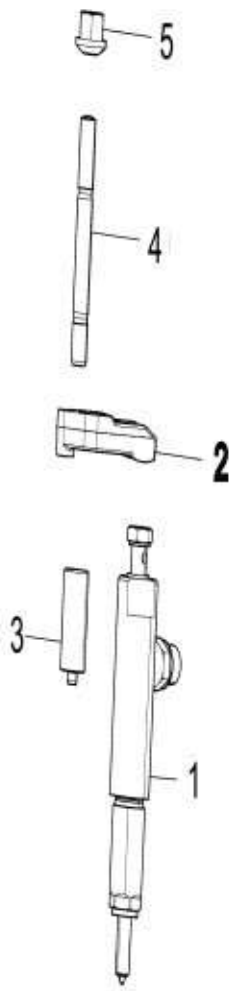

41

31

Print Date: 05-Oct-2022

PLATE-14
INJECTOR

Fig. No.	Part No.	Description	Qty	Remarks
1	E10G120004	INJECTOR ASSY WITH JOINT	1	
2	E10M120004	FLANGE INJECTOR	1	
3	E10M120003	DOWEL PIN	1	
4	E10B120001	INJECTOR STUD	1	
5	E60000227	HEX. NUT FOR INJECTOR CLAMP M8X1.25	1	

32

Print Date: 05-Oct-2022

PLATE-15
FUEL PUMP

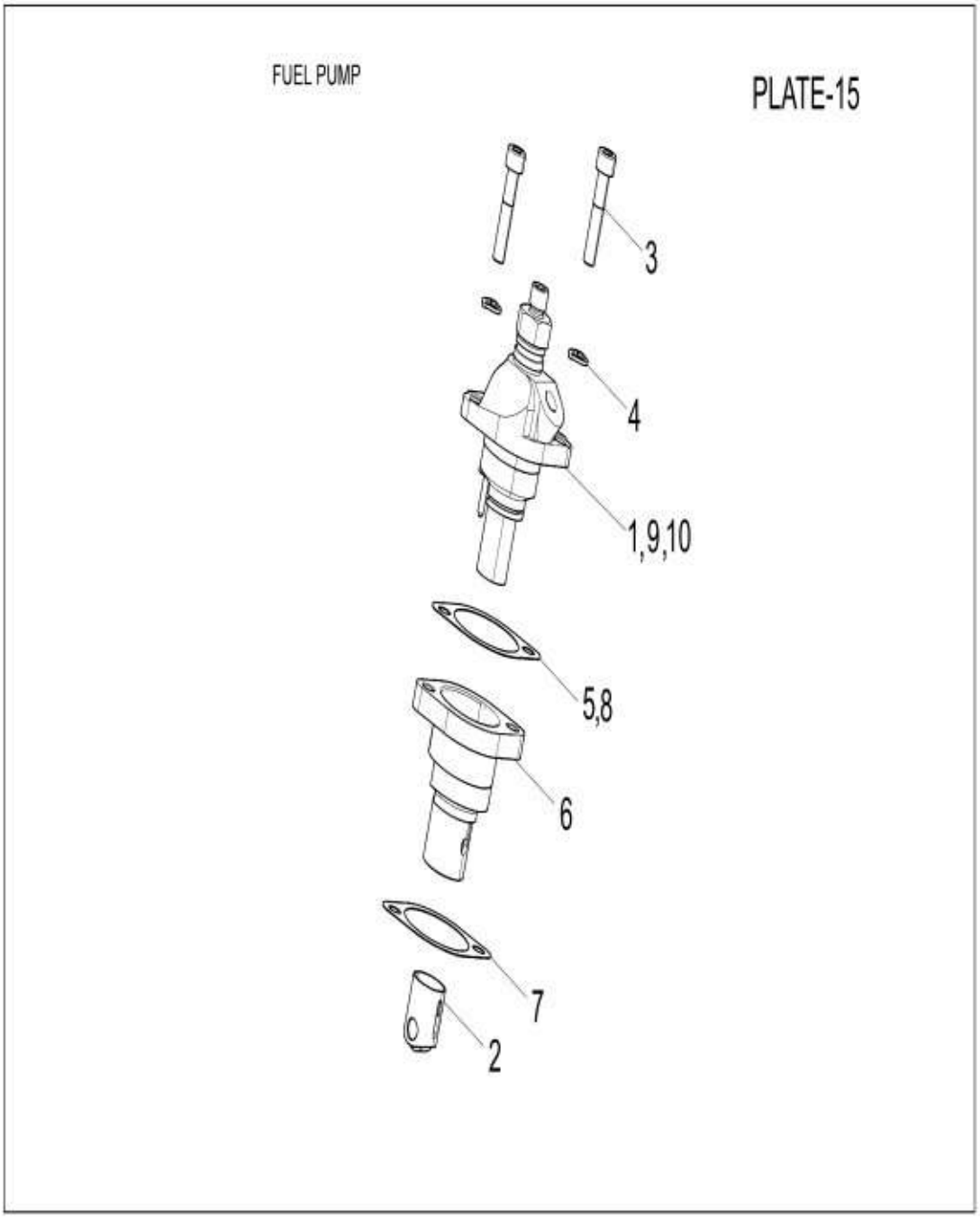

43

33

Print Date: 05-Oct-2022

PLATE-15
FUEL PUMP

Fig. No.	Part No.	Description	Qty	Remarks
1	E10G120070	FIP (PCA ENGINE)	1	FOR 5.52 KW ENGINE
2	E10G120003	ROLLER TAPPET	1	
3	E10M120019	SCREW	2	
4	E1756507	SPRING WASHER M8	2	
5	E500458029	SHIM 0.1MM	1	AS REQUIRED(QTY)
6	E10M120001	FIP CASING	1	
7	E10S070020	JOINT FOR FIP CASING(STEEL)	1	
8	E5004580057	SHIM 0.05MM FOR FUEL PUMP	1	AS REQUIRED

34

Print Date: 05-Oct-2022

PLATE-16

CAM SHAFT, PUSH ROD & ROCKER ARM

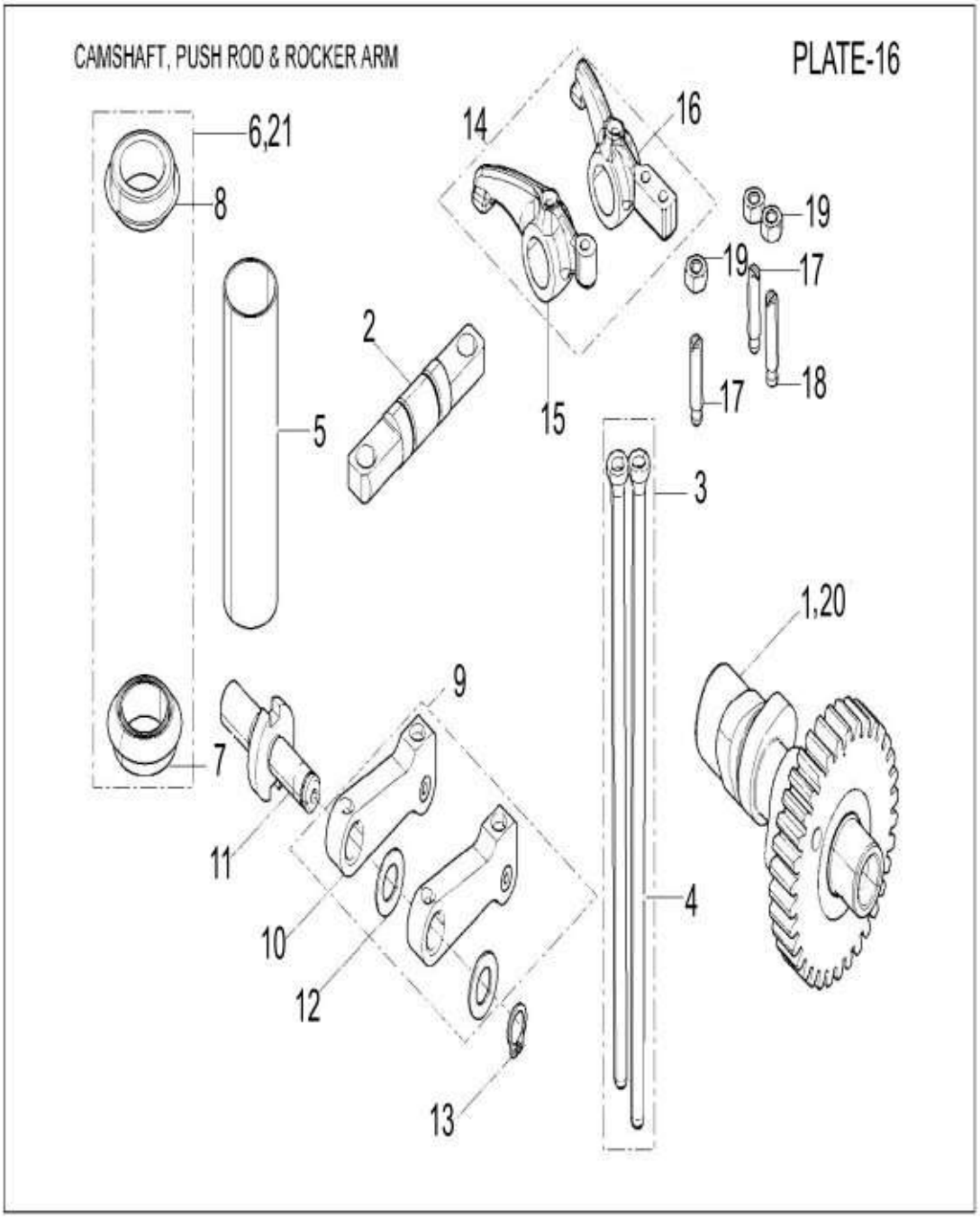
CAMSHAFT, PUSH ROD & ROCKER ARM
PLATE-16
6,21
8
14
16
19
19
17
2
18
17
15
5
3
1,20
9
7
11
4
10
12
13

46

35

Print Date: 05-Oct-2022

PLATE-16

CAM SHAFT, PUSH ROD & ROCKER ARM

Fig. No.	Part No.	Description	Qty	Remarks
1	E10A060006	SPLIT CAMSHAFT	1	
2	E5406045038	ROCKER FULCRUM	1	
3	E43507359	SET OF PUSHRODS	1	
4	E43507331	PUSH ROD 500 SR.	2	
5	E43507330	PUSH ROD TUBE	1	
6	E43526174	SLEEVE SET CONSISTING OF 4 & 5	1	
7	E40006428	JOINT PUSH ROD SLEEVE (G400AG)	2	AS REQUIRED
8	E40016468	JOINT PUSH ROD SLEEVE (GREEN)	2	AS REQUIRED
9	E40016468	JOINT PUSH ROD SLEEVE (GREEN)	2	AS REQUIRED
10	E40006428	JOINT PUSH ROD SLEEVE (G400AG)	2	AS REQUIRED
11	E52005171	SET OF CAM FOLLOWER LEVERS	1	
12	E5005271054	CAM FOLLOWER LEVER	2	
13	ED30956	PIN LH THREAD	1	
14	E500755006	DISTANCE PIECE	2	
15	E47124004	CIRCLIP	1	
16	E10A060009	ROCKER LEVER SET	1	
17	E43502768	ROCKER LEVER INLET	1	
18	E10A060001	ROCKER LEVER EXHAUST ASSLY	1	
19	E500985048	ADJUSTING SCREW	2	
20	E505985052	DECOMPRESSOR OPERATING SCREW	1	
21	E105324008	NUT HEX -OIL SEPARATOR MOUNTING	3	
22	E10A060010	CAMSHAFT (PCA ENGINE)	1	IMPROVED ENGINE(PCA
23	E10G140055	SLEEVE SET	2	

36

Print Date: 05-Oct-2022

PLATE-17

EXTERNAL FUEL FILTER & FUEL PIPES

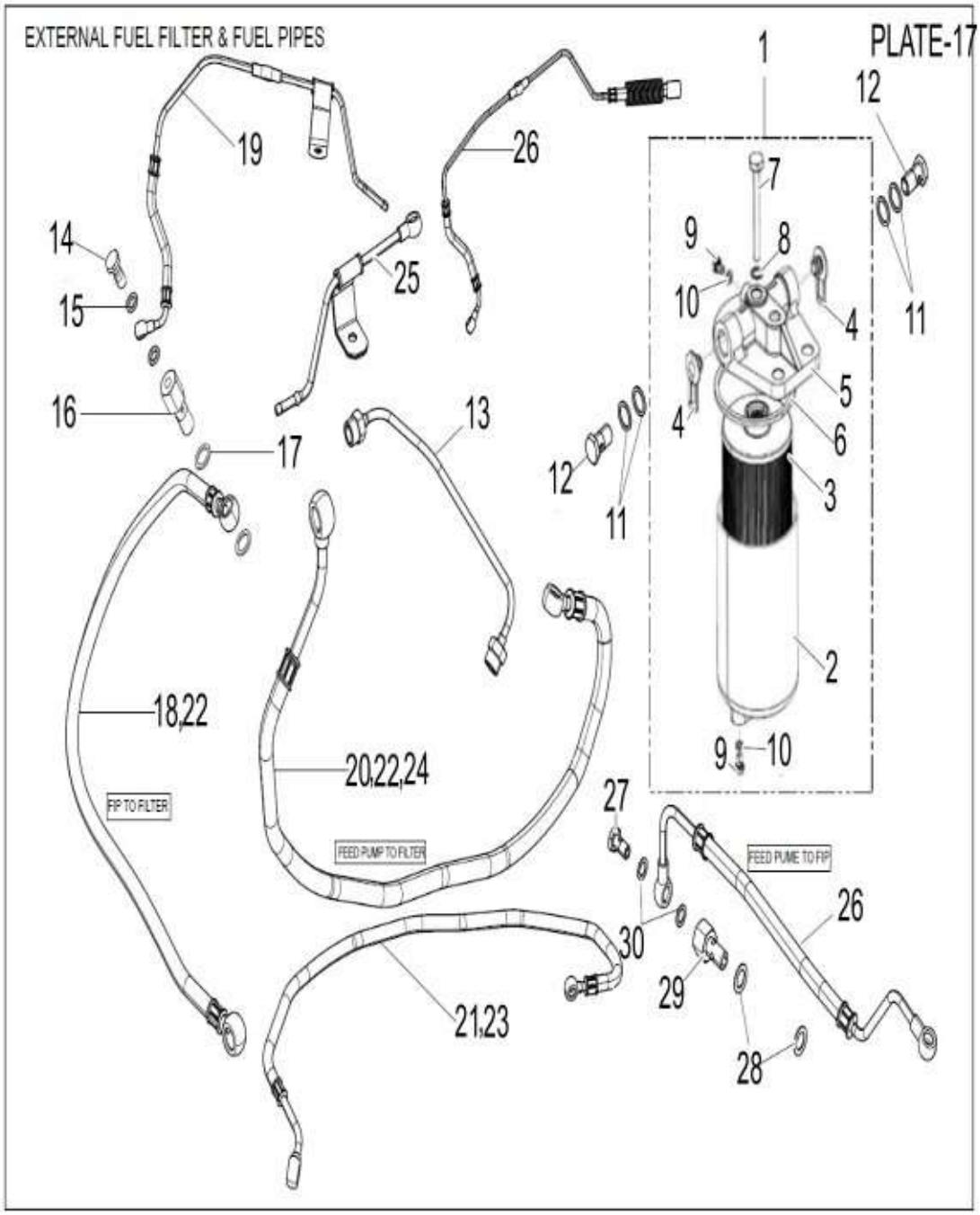
EXTERNAL FUEL FILTER & FUEL PIPES
PLATE-17
1
12
19
26
7
14
9
8
25
10
4
11
15
5
16
13
4
6
17
12
3
11
2
18,22
9
10
20,22,24
27
FIP TO FILTER
FEED PUMP TO FILTER
FEED PUME TO FIP
26
30
29
21,23
28

48

37

Print Date: 05-Oct-2022

PLATE-17

EXTERNAL FUEL FILTER & FUEL PIPES

Fig. No.	Part No.	Description	Qty	Remarks
1	E083438200	FUEL FILTER ASSY. (WITH STAR INSERT) (0.5 LIT.) SUPPLIER	1	Not Applicalbe for PVPL Engine
2	E10G120012	FILTER (WITH STAR INSERT) 0.5 LTR	1	
3	9451035101	FILTER HOUSING	1	
4	9451037405	DIESEL FILTER ELEMENT	1	
5	E10G120014	FILTER ELEMENT	1	
6	2410508007	PROTECTIVE CAP	1	Not serviceable
7	F002H20268	FILTER COVER	1	
8	9451030109	SEALING RING	1	
9	9411033428	HEX SCREW	1	Not serviceable
10	2916710603	FLAT SEAL RING	1	
11	F002H21213	HEXAGON SCREW	2	
12	2916710602	FLAT SEAL RING	2	Not serviceable
13	E07506189	JOINT 14X20X1.5 THICK	4	
14	E07500819	BANJO BOLT	2	
15	E10T120001	HIGH PRESSURE PIPE ASSLY	1	
16	E1441570056	BANJO BOLT OVERFLOW	1	
17	E40000687	JOINT	2	
18	E7101901012	BANJO BOLT PUMP INLET	1	
19	E904467015	JOINT	2	
20	E43527184	FUEL PIPE (FILTER TO FUEL PUMP)	2	REAR MTG APPLN
21	E10T120010	OVERFLOW PIPE COMMON	1	PVPL/ATUL/SIL FRNT
22	E43527185	FUEL PIPE (FEED PUMP TO FILTER)	1	PVPL
23	E40017131	FUEL PIPE (TANK TO FEED PUMP)	1	PVPL/ATUL AUTO(REAR)
24	E43537175	FUEL PIPE (FUEL FILTER TO FIP)	1	
25	E43537158	FUEL PIPE - TANK TO FEED PUMP	1	
26	E43537159	FUEL PIPE (FEED PUMP TO FUEL FILTER)	1	
27	E10T120016	INJECTOR BANJO -OVER FLOW PIPE	1	IMPROVED ENGINE(PCA)
28	E10T120015	OVERFLOW PIPE (THREE WAY) (PCA ENGINE)	1	IMPROVED ENGINE(PCA)
29	E200190002	BANJO BOLT	1	IMPROVED ENGINE(PCA)
30	E283467036	JOINT	2	IMPROVED ENGINE(PCA)
31	E60000831	BANJO BOLT M10X1 (PCA ENGINE)	1	IMPROVED ENGINE(PCA)
32	E200467003	JOINT	2	IMPROVED ENGINE(PCA)

38

Print Date: 05-Oct-2022

PLATE-18
FEED PUMP

FEED PUMP

PLATE-18

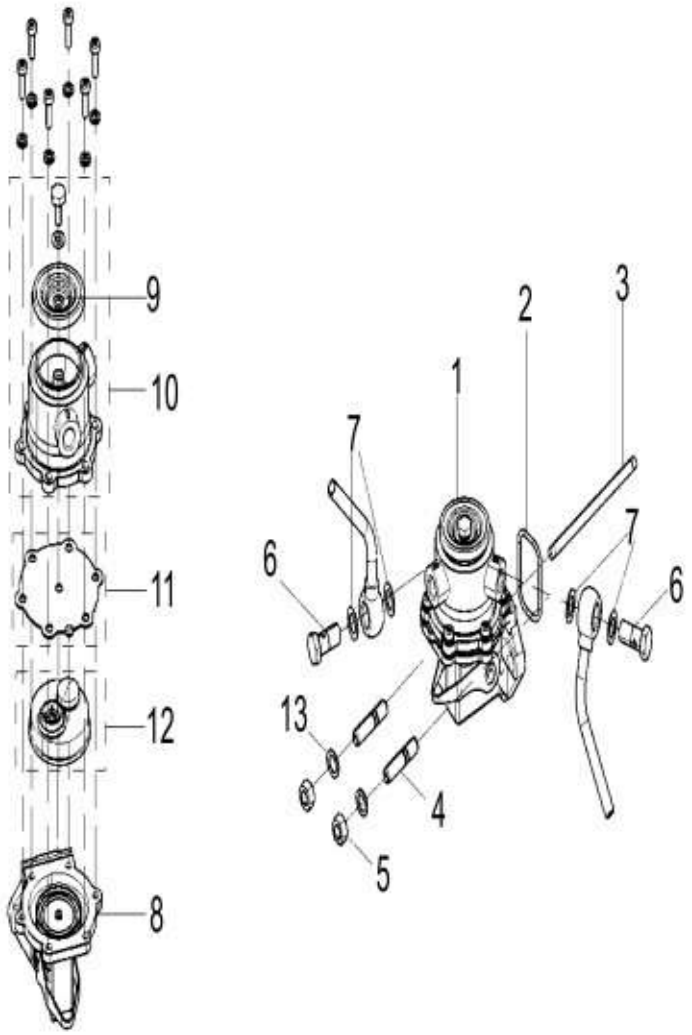

52

39

Print Date: 05-Oct-2022

PLATE-18
FEED PUMP

Fig. No.	Part No.	Description	Qty	Remarks
1	E10G120009	FEED PUMP	1	
2	E10G110015	O-RING	1	
3	ED41931	PIN FOR FEED PUMP (BSII)	1	
4	E50000506	STUD M8X1.25X34	2	
5	E9324018	NUT M8 X 1.25 X 6.5	2	
6	E91901030	BANJO BOLT - FEED PUMP	2	
7	E283467036	JOINT	4	
8	E40006815	BOTTOM BODY (FOR E40006819)	1	
9	FP-86-04 OR SH-FP-04	FILTER	1	Not serviceable
10	E40006816	TOP BODY (FOR E40006819)	1	
11	E40006818	DIAPHRAGM (FOR E40006819)	1	
12	E40006817	VALVE BODY (FOR E40006819)	1	
13	E50000613	MACHINED WASHER 16X8.1X2	2	

40

Print Date: 05-Oct-2022

PLATE-19

LIQUID PRESSURISED INJECTION SYSTEM (LPIS)

LIQUID PRESSURISED INJECTION SYSTEM (LPIS)

PLATE-19

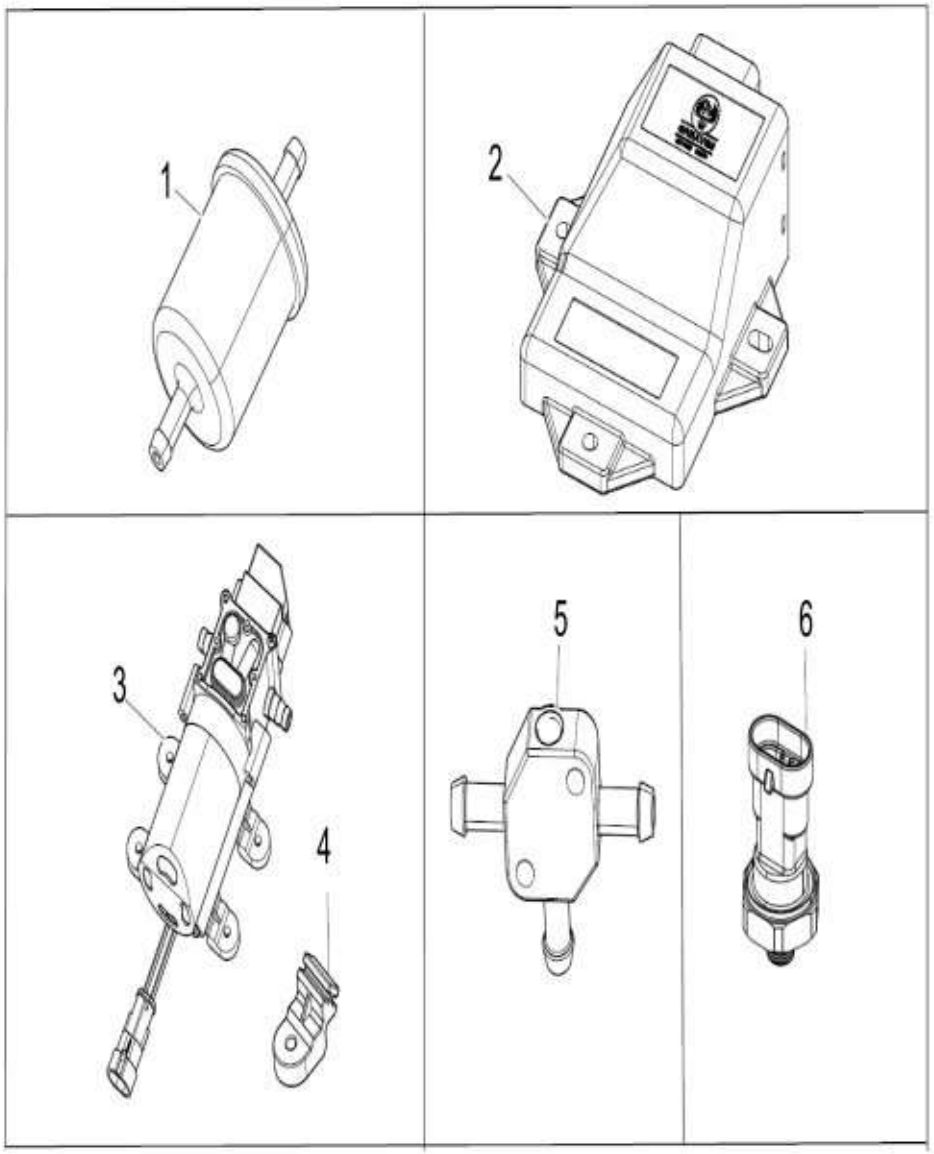

54

41

Print Date: 05-Oct-2022

PLATE-19

LIQUID PRESSURISED INJECTION SYSTEM (LPIS)

Fig. No.	Part No.	Description	Qty	Remarks
1	EN01P100002	LIQUID FILTER	1	
2	EN01A130002	LPI CONTROLLER	1	
3	EN01K100001	LIQUID PUMP	1	
4	EN01G130003	RUBBER PAD MOUNTING - LIQUID PUMP	1	
5	EN01T100001	T-CONNECTOR	1	
6	EN01K100004	PRESSURE SWITCH	1	

42

Print Date: 05-Oct-2022

PLATE-20
AIR FILTER ASSEMBLY

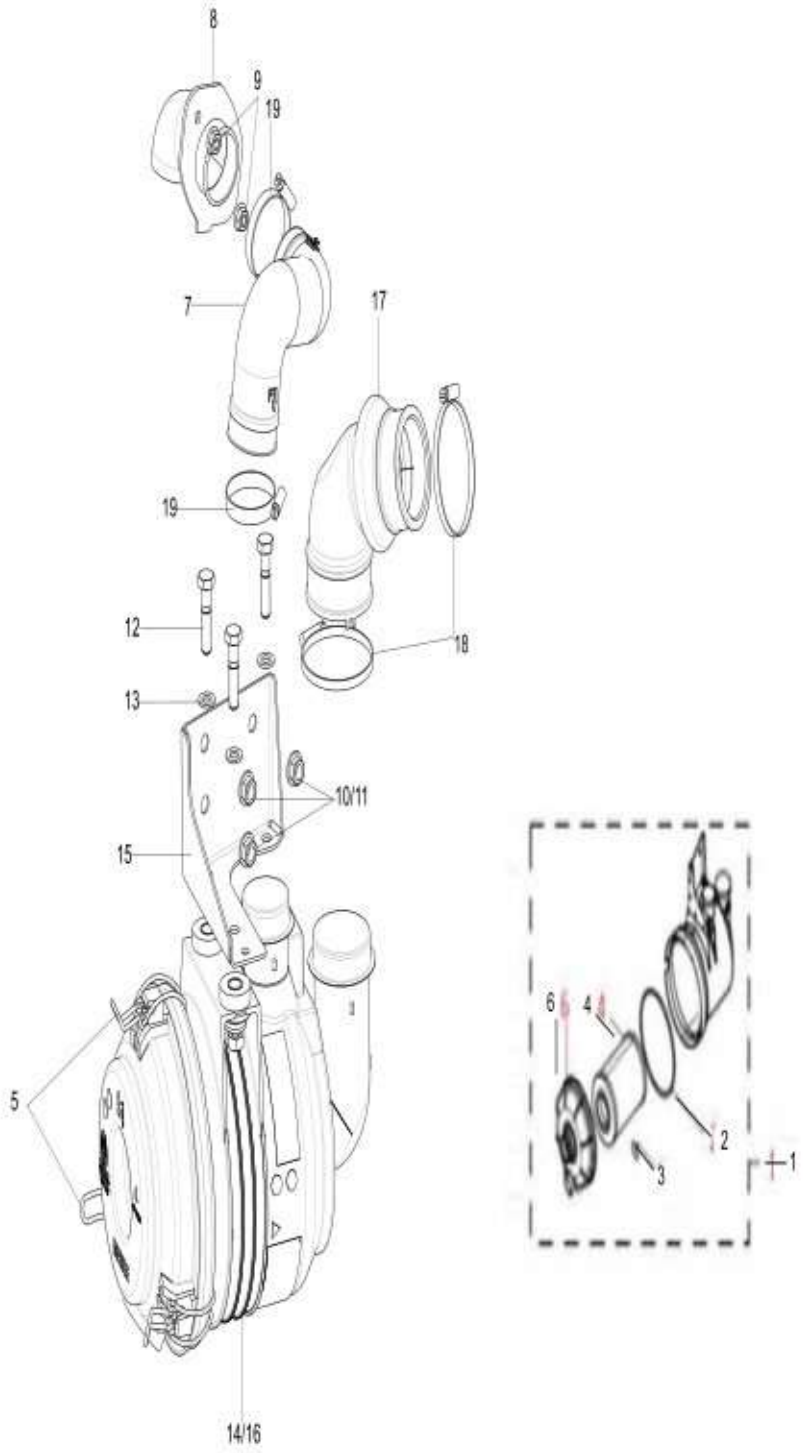
8
9
19
7
17
19
12
18
13
10/11
15
6
4
5
2
3
1
14/16

43

Print Date: 05-Oct-2022

PLATE-20
AIR FILTER ASSEMBLY

Fig. No.	Part No.	Description	Qty	Remarks
1	EN01A140002	AIR FILTER ASSY. WITHOUT BRACKET	1	
2	NEW-	PISTON ASSY APE CITY+ BS6 230CC (GAS)	1	
3	A01G140036	AIR FILTER DUST VALVE	1	
4	A01G140013	AIR FILTER ELEMENT ASSEMBLY	1	
5	A01G140037	AIR FILTER COVER CLAMP	3	
6	A01G140035	AIR FILTER COVER	1	
7	611620	HOSE FOR FLANGE ENGINETECH	1	
8	611621	PLASTIC FLANGE ENGINETECH (N.I.)	1	
9	B078223	FLANGE CLEVELOC NUT, M8X1.25-6H	2	
10	20108	HEX NUT M8	3	
11	2383	PLAIN WASHER M20X8.5X2	3	
12	30072	HEX HEAD BOLT M8 X 35	3	
13	3058	PLAIN WASHER 15X8.4X1.5	3	
14	632413	RUBBER PACKING (N.I.)	1	
15	6A002140	BRACKET AIR FILTER MOUNTING	1	
16	B009290	STRAP ASSY.	1	
17	6A002034	HOSE AIR FILTER TO ENGINE	1	
18	604756	HOSE CLIP	2	
19	604553	WORM CLIP	2	

44

Print Date: 05-Oct-2022

PLATE-21

FUEL TANK ASSEMBLY AND PIPES

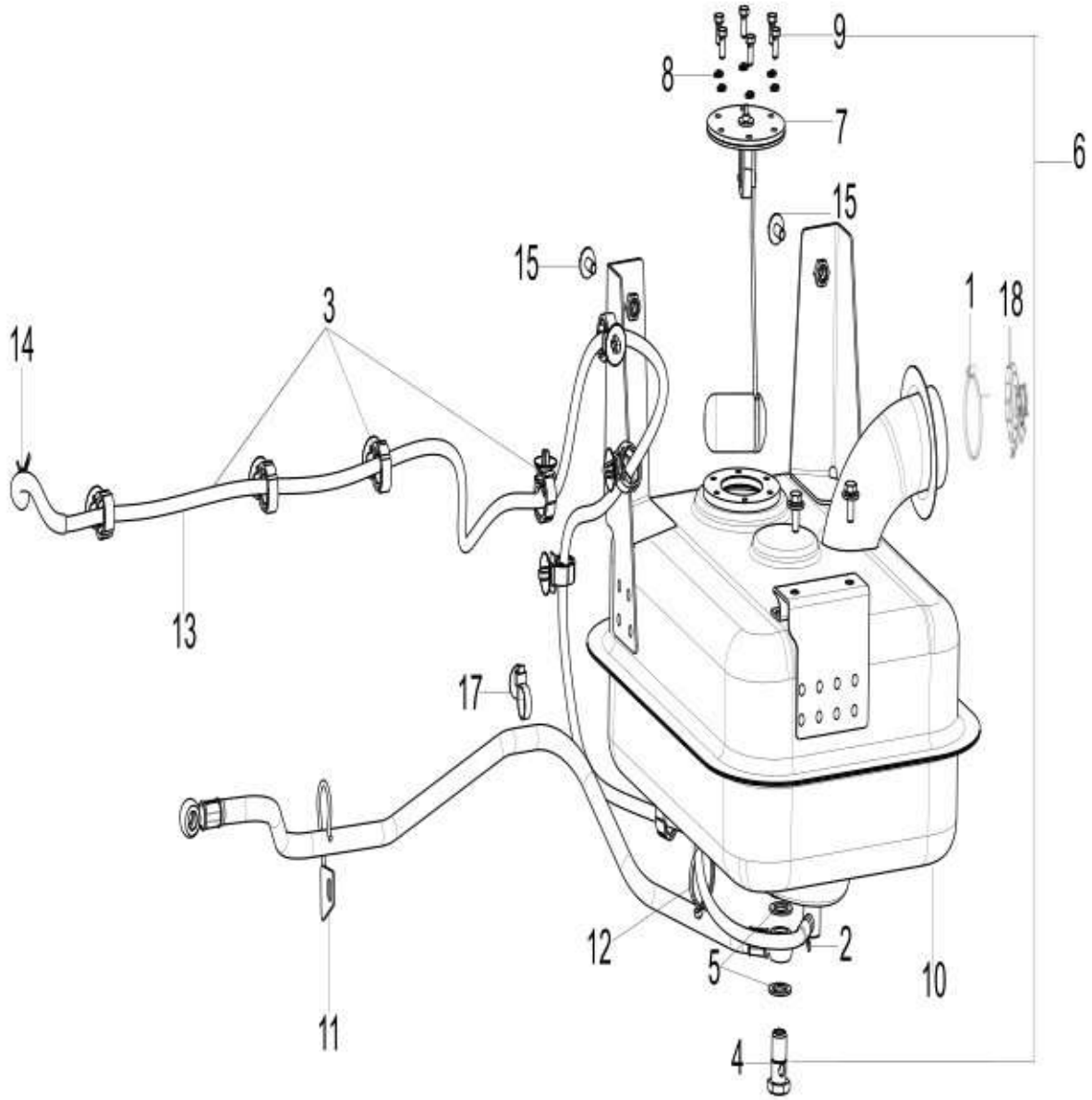
9
8
7
6
15
15
1
18
3
14
13
17
12
2
5
10
11
4

45

Print Date: 05-Oct-2022

PLATE-21

FUEL TANK ASSEMBLY AND PIPES

Fig. No.	Part No.	Description	Qty	Remarks
1	662571	HOSE CLAMP	2	
2	B041852	SPRING BAND HOSE CLIP (DIA. 9.4)	1	
3	B076007	PIPE CLIP 1 WAY	8	
4	604909	BANJO BOLT (M14X1.5)	1	
5	224644	COPPER WASHER M10	2	
6	6A000528	ASSY. FUEL TANK WITH TANK UNIT	1	
7	567878R	TANK UNIT	1	
8	16405	SPRING WASHER M5	6	
9	31056	HEX HEAD SCREW M5 X 12 CL. 8.8	6	
10	6A000527	ASSY. FUEL TANK W/O TANK UNIT	1	
11	6A000617	BRACKET ASSY, FUEL LINE	1	
12	145298	PLASTIC CLAMP	1	
13	6A002085	HOSE FUEL RETURN	1	
14	B003282	HOSE CLIP (DIA.7) (PETROL & CNG/LPG)	1	
15	D9166140616	BOLT, W/WASHER	4	
16	889302	SCREW	2	
17	217280	CLAMP	1	
18	B024170	DIESEL TANK CAP WITH KEY	1	

46

Print Date: 05-Oct-2022

PLATE-22

SOLVENT SYSTEM AND LIQUID PUMP AND PIPES

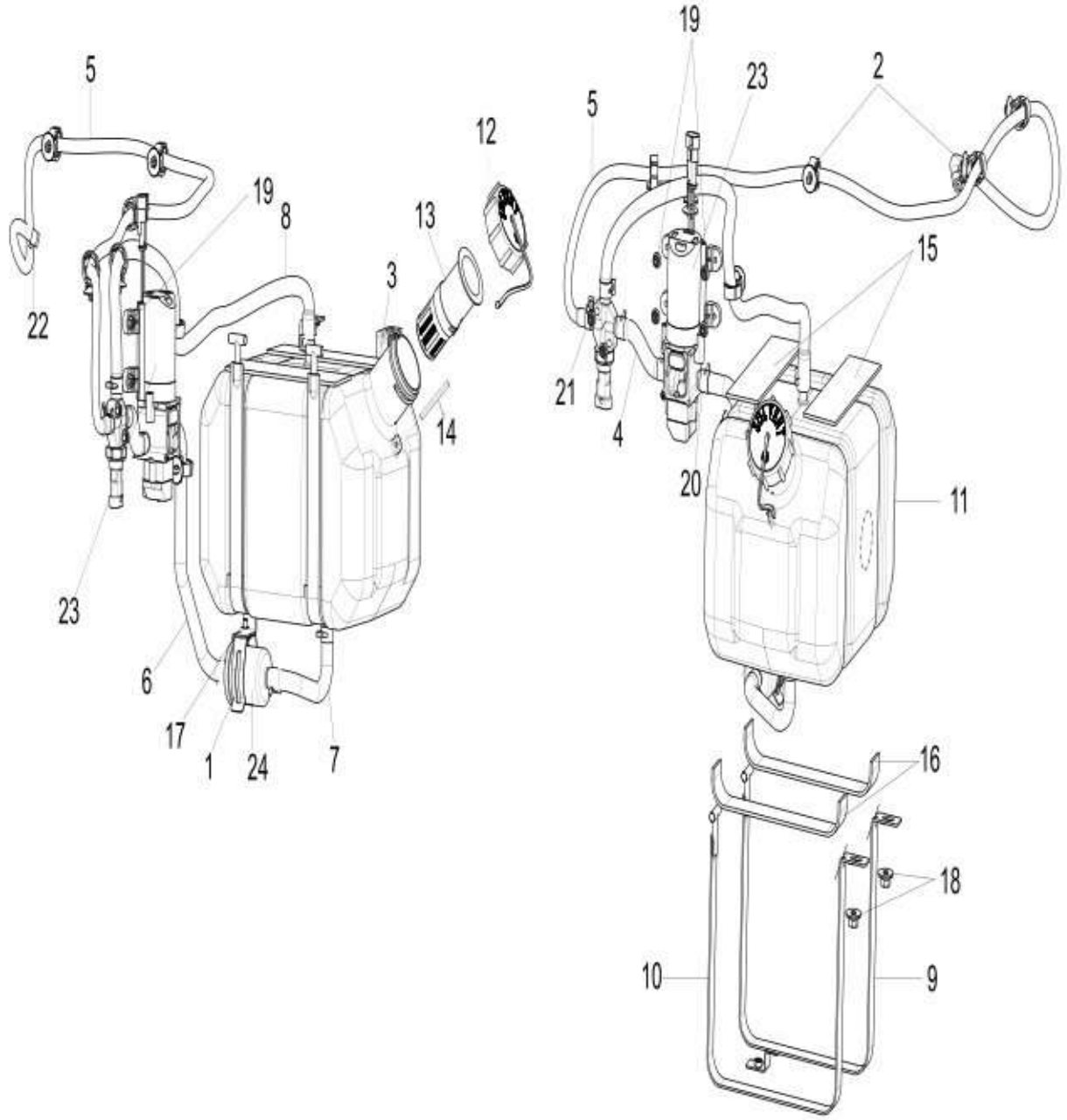
5
19
8
22
23
6
17
1
24
7
3
13
12
14
19
23
2
5
15
21
4
20
11
16
18
10
9

47

Print Date: 05-Oct-2022

PLATE-22

SOLVENT SYSTEM AND LIQUID PUMP AND PIPES

Fig. No.	Part No.	Description	Qty	Remarks
1	6A000836	SNAP FIT BKT., FILTER MTG (ARAYMOND)	1	
2	B076007	PIPE CLIP 1 WAY	7	
3	632109	HOSE CLAMP BRAKE PIPE	1	
4	6A002079	HOSE PUMP TO T-CONNECTOR	1	
5	6A002080	T-CONNECTOR TO INJECTOR	1	
6	6A002220	HOSE, FILTER TO PUMP	1	
7	6A002221	HOSE, TANK TO FILTER	1	
8	6A002222	RETURN HOSE	1	
9	6A002233	ASSY. SOLVENT TANK STRAP WITH FILTER MTG	1	
10	6A002240	ASSY. SOLVENT TANK STRAP	1	
11	6A002237	ASSY. SOLVENT TANK (8L)	1	
12	6A002224	ASSY. CAP WITH STRING	1	
13	6A002235	ASSY. SOLVENT STRAINER	1	
14	6A002234	WIRE PIN FOR STRAINER	1	
15	6A002238	RUBBER PAD UPPER, SOLVENT TANK	2	
16	6A002239	RUBBER PAD FOR STRAP, SOLVENT TANK	2	
17	D9166140616	BOLT, W/WASHER	1	
18	B016939	FLANGED NUT M8X1.25	2	
19	241937	NUT FOR H.T. COIL FIXING (M=5;H=5,5)	6	
20	D9004467161	CLIP	8	
21	B001543	HOSE CLAMP	1	
22	B075707	SPRING BAND HOSE CLAMP (DIA 10	1	
23	EN01K100001	LIQUID PUMP	1	
24	EN01P100002	LIQUID FILTER	1	

48

Print Date: 05-Oct-2022

PLATE-23
ALUMINIUM CLUTCH ASSEMBLY

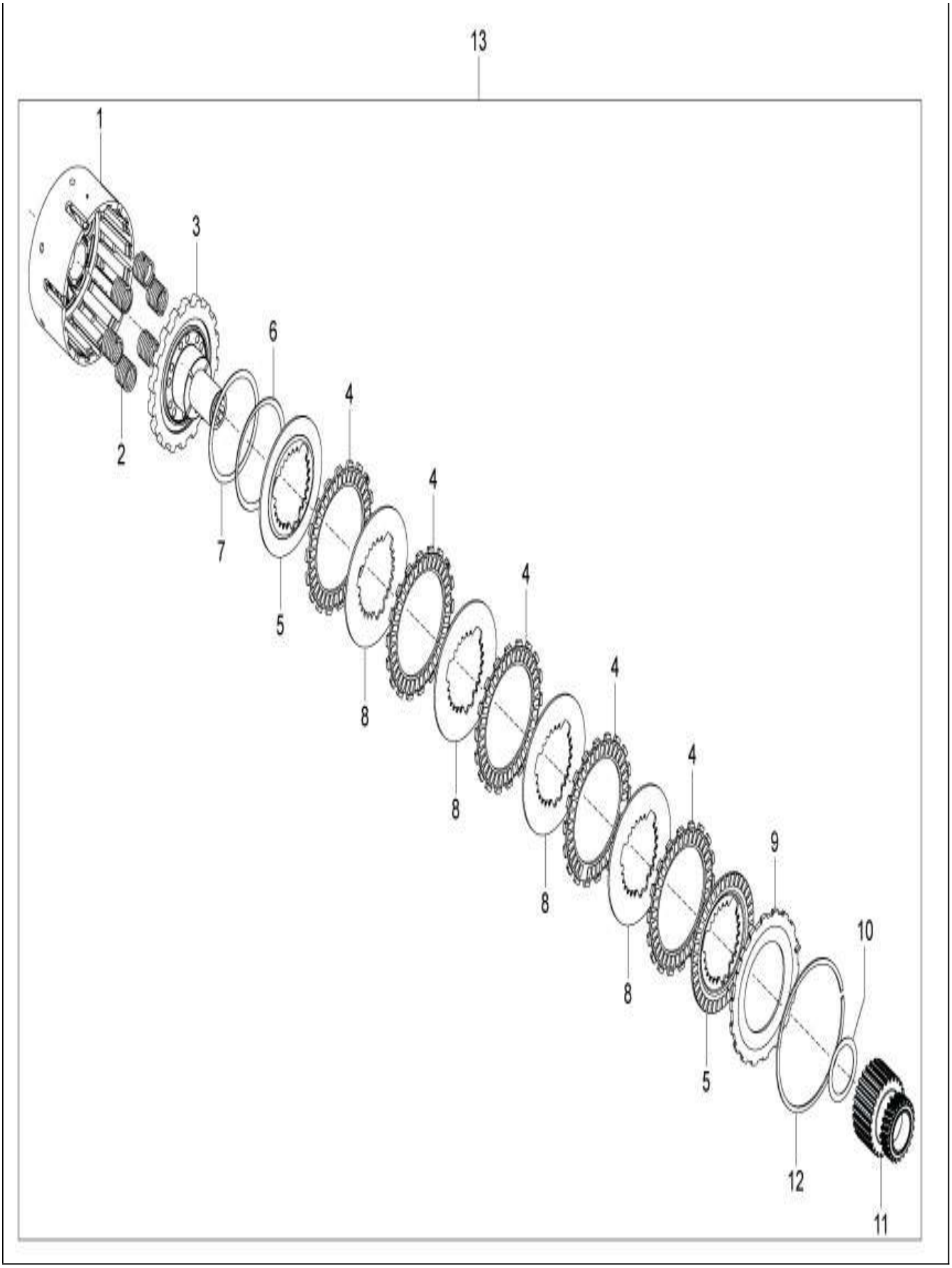
13
1
3
6
4
2
4
7
4
5
4
8
4
8
9
8
10
8
5
12
11

49

Print Date: 05-Oct-2022

PLATE-23

ALUMINIUM CLUTCH ASSEMBLY

Fig. No.	Part No.	Description	Qty	Remarks
1	1A017153	CLUTCH HOUSING	1	
2	1A017147	CLUTCH SPRING	6	
3	1A017154	PLATE HUB	1	
4	1A017155	DRIVER PLATE	5	
5	1A017156	DRIVEN PLATE	2	
6	1A017157	DAMPER SPRING	1	
7	1A017158	DAMPER SPRING RETAINER	1	
8	1A017159	DRIVEN PLATE	4	
9	1A017160	CLUTCH LOCK PLATE	1	
10	1A017161	SHIM WASHER	1	
11	1A017162	ENGINE GEAR WITH BUSH	1	
12	1A017163	RETAINING RING	1	
13	1A015065	COMPLETE CLUTCH ASSY	1	
14	KIT95117R	KIT ALUMINIUM CLUTCH PLATES DSL BS4/BS6	1	Complete Clutch Plate Set (NI)

50

Print Date: 05-Oct-2022

PLATE-24

CLUTCH AND COVER ASSEMBLY (FOR ALUMINIUM CLUTCH)

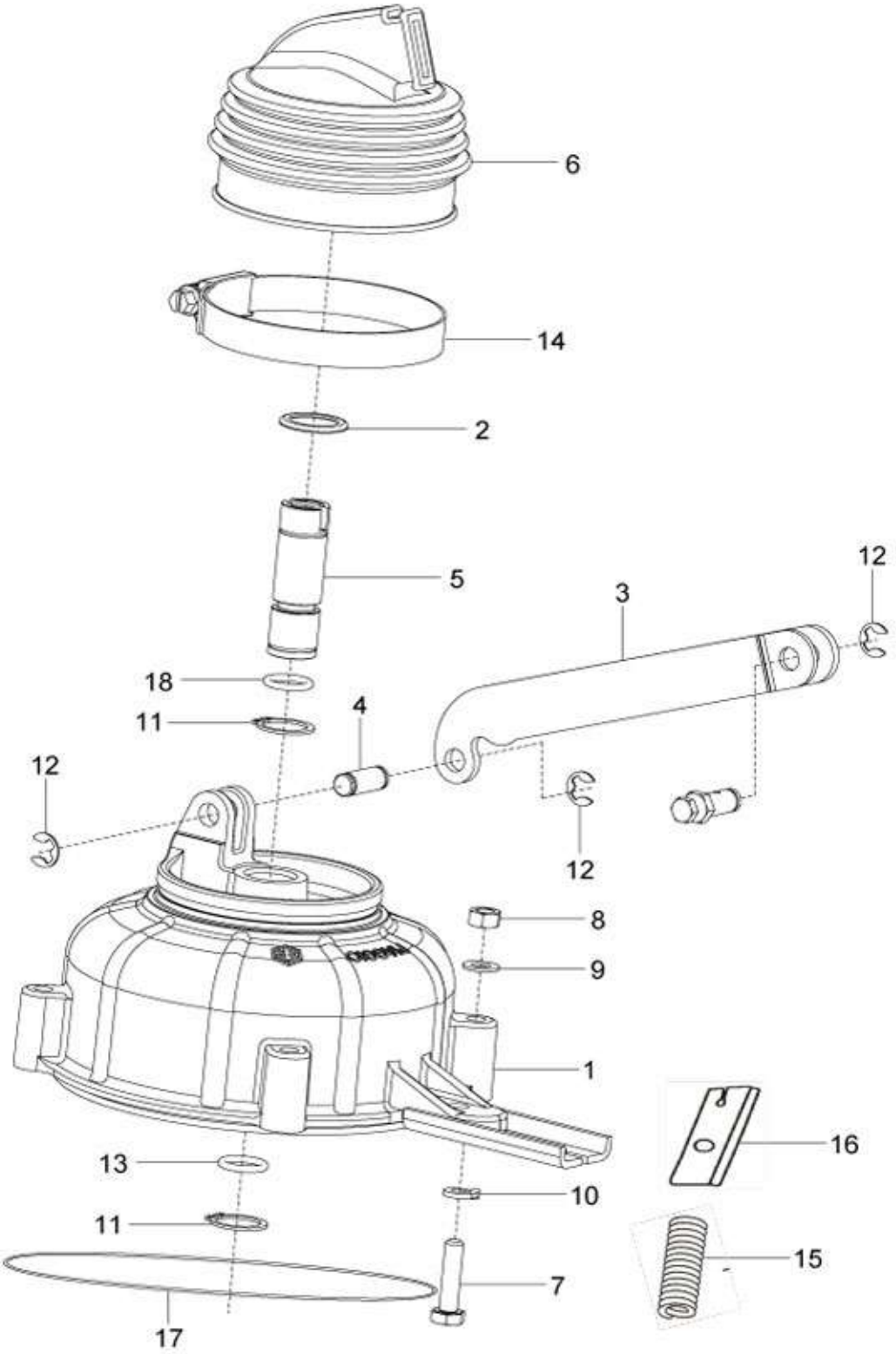
6
14
2
5
12
3
18
11
4
12
12
8
9
1
16
13
10
11
15
7
17

51

Print Date: 05-Oct-2022

PLATE-24

CLUTCH AND COVER ASSEMBLY (FOR ALUMINIUM CLUTCH)

Fig. No.	Part No.	Description	Qty	Remarks
1	1F000830	CLUTCH COVER	1	
2	120164019	RETAINING PLATE	1	
3	1A019307	CLUTCH LEVER WITH I.P.	1	Appli.for Modi.Clutch Cable (60mm Length)
4	127013013	PIN CLUTCH	1	
5	1A014753	PLUNGER SHAFT	1	
6	127012019	BELLOW CLUTCH ACTUATING	1	
7	31092	HEX. HD SCREW M6X25	1	
8	20106	HEX NUT M6	4	
9	3056	PLAIN WASHER M6 OD12	4	
10	016406	SPRING WASHER	1	
11	842001600	CIRCLIP DIA.16(EXT)	1	
12	843000809	CIRCLIP DIA.8(EXT) TYPE C	2	
13	B019220	O- RING (PLUNGER SHAFT)	2	
14	120170018	HOSE CLIP - CLUTCH COVER BELOW	1	
15	127185012	SPRING - CLUTCH COVER	1	
16	1A019644	CLUTCH CABLE BRACKET	1	Appli.for Modi.Clutch Cable (60mm Length)
17	825123207	O - RING CLUTCH COVER	1	
19	B016956	DEEP GROOVE BALL BEARING	1	NI
20	1A007179	SPACER	1	NI
21	652124	SPACER WASHER-CLUTCH	1	NI
22	B018678	SCREW M8X30	1	NI
23	1A006634	BELLEVILLE WASHER	1	NI

52

Print Date: 05-Oct-2022

PLATE-25

ENGINE SIDE COVER & MAIN HOUSING

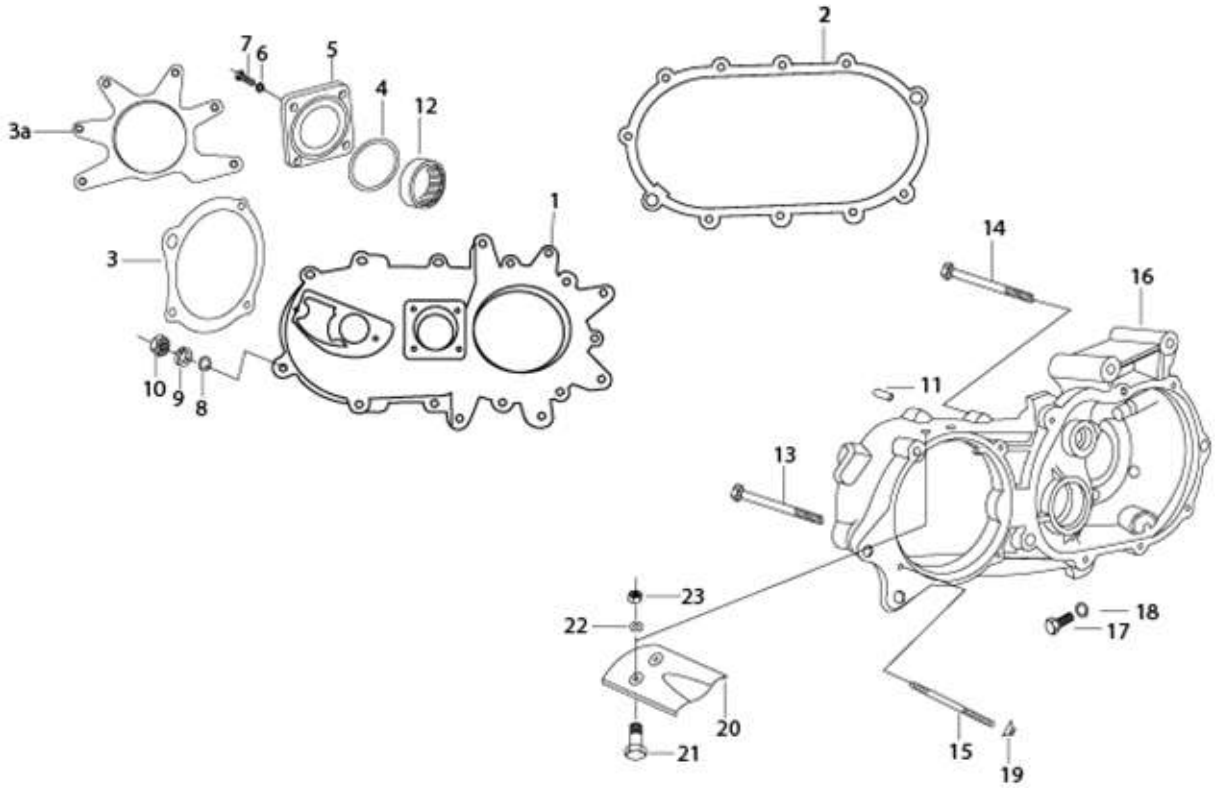
2
7
6
5
4
12
3a
1
3
14
16
11
10
9
8
13
23
22
18
17
20
21
15
19

53

Print Date: 05-Oct-2022

PLATE-25

ENGINE SIDE COVER & MAIN HOUSING

Fig. No.	Part No.	Description	Qty	Remarks
1	1F0007564	ENGINE COVER SIDE (EXT. MTG)	1	
2	B001844	GASKET ENGINE SIDE COVER	1	
3	129001014	GASKET ENGINE PTO FACE (4 STUD)	1	Not Applicable
3A	B001501	GASKET PTO COVER & ENGINE SIDE COVER	1	
4	825420215	O RING - COVER PLATE	1	
5	520221019R	COVER PLATE (E/SIDE COVER)	1	
6	807000647	CONICAL LOCK WASHER M6	4	Not Applicable
7	B017088	CSK PHILIPS HEAD SCREW M6 X 16	4	
8	808000826	PLAIN WASHER M8	11	
9	16406	SPRING WASHER M6 OD12	11	
10	3056	PLAIN WASHER M6 OD12	11	
11	127102010	HOLLOW DOWEL (G. BOX ESC)	2	
12	120212012	NEEDLE BUSH	1	
13	B042798	FLANGED HEXAGONAL HEAD SCREW M8X45	2	
14	B042799	FLANGED HEXAGONAL HEAD SCREW M8X40	9	
15	B016611	FLANGED HEX. HEAD SCREW M6X45 CL10	4	
16	1A016604	MAIN HOUSING	1	New aluminiun clutch
17	811081025	HEX HEAD SCREW M8 X 10 (DRAIN PLUG)	1	
18	3056	PLAIN WASHER M6 OD12	1	
19	016406	SPRING WASHER	6	
20	127911019	OIL DEFLECTOR CLUTCH	1	NA
21	567741	HEX HEAD SCREW M5 X 18 (811051824)	2	NA
22	127912013	FIBER WASHER OIL DEFLECTOR	2	NA
23	12136	NUT / NYLOCK NUT M5	2	NA
24	B076830	GB EXT.MTG.(W/O CLUTCH ASSLY) PASS. STD	1	NI

54

Print Date: 05-Oct-2022

PLATE-26

MAINSHAFT SPEEDGEAR AND CLUSTER GEAR

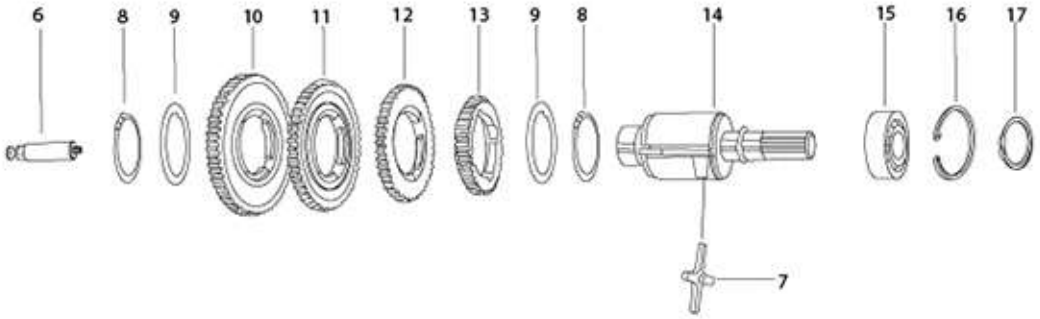
6
8
9
10
11
12
13
9
8
14
15
16
17
7

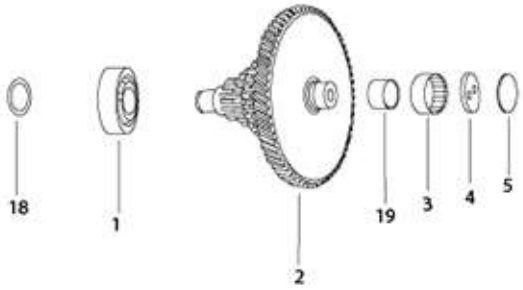
18
1
2
19
3
4
5

55

Print Date: 05-Oct-2022

PLATE-26

MAINSHAFT SPEEDGEAR AND CLUSTER GEAR

Fig. No.	Part No.	Description	Qty	Remarks
1	30209R	BALL BEARING FRONT WHEEL HUB	1	
2	1A010698R	CLUSTER GEAR	1	
3	884222808	NEEDLE BUSH 22X28X12	1	
4	120204015R	WASHER (ALT)	1	
5	120205019	SHIM HARD BUSH	1	
6	523021018	STEM GEAR OPERATING	1	
7	B003924	CROSS	1	
8	842004808	CIRCLIP DIA.48 (EXT)	2	
9	523011013R	SHOULDER RING	2	
10	1A009578R	SPEED GEAR 1ST	1	
11	1A010700R	SECOND SPEED GEAR (VE}	1	
12	127303016R	SPEED GEAR 3RD	1	
13	127306513R	SPEED GEAR 4TH	1	
14	127451019R	MAIN SHAFT	1	
15	880255211R	DEEP GROOVE BALL BEARING 25X52X15	1	
16	841005207	CIRCLIP DIA 52 (INT)	1	
17	842002501	CIRCLIP DIA 25 (EXT)	1	
18	842001507	CIRCLIP DIA 15 (EXT)	1	
19	122032014	INNER RING - CLUSTER GEAR	1	

56

Print Date: 05-Oct-2022

PLATE-27

DIFFERENTIAL UNIT, FARE METER HOUSING, SPEEDO DRIVE

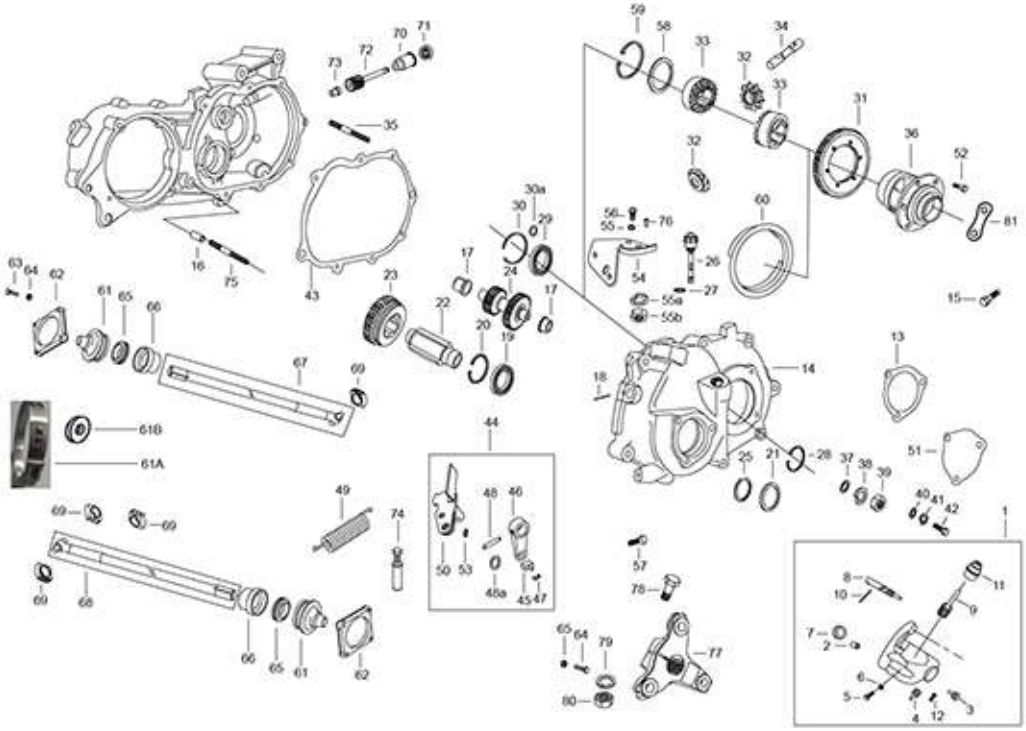
59
58
33
34
32
33
31
36
52
81
70
71
73
72
35
32
30a
30
29
56
55
76
60
26
27
54
55a
55b
16
75
43
23
17
24
17
22
20
19
63
64
62
61
65
66
67
69
15
13
14
18
61B
61A
44
25
21
28
37
38
39
51
40
41
42
1
49
74
69
69
69
68
50
53
48
46
48a
45
47
57
78
8
10
11
9
7
2
6
5
4
12
3
66
65
61
62
65
64
79
77
80

57

Print Date: 05-Oct-2022

PLATE-27

DIFFERENTIAL UNIT, FARE METER HOUSING, SPEEDO DRIVE

Fig. No.	Part No.	Description	Qty	Remarks
1	124140011	FARE METER HOUSING ASSY. COMPLETE (MODIFIED)	1	
2	124112014	BUSH(10951)	1	
3	125012015	PLUG F.M.HOUSING (40734)	1	
4	165121014	PIN	1	
5	120238016	BOLT FOR SCREW TERMINAL	1	
6	20105	PLAIN NUT M5	1	
7	B018991	PLUG FOR FAREMETER	1	
8	124121015	FARE METER PINION	1	
9	124102019	FARE METER GEAR	1	
10	822031942	SPRING PIN 3 X 19	1	
11	124141015R	ADOPTER NYLON (VE)	1	
12	124113018	GREASE NIPPLE (M6)	1	
13	1A000826	GASKET	1	NA for Pass.
14	1A010093	GEAR BOX COVER	1	
15	1A004807	SCREW	3	
16	120203011	HOLLOW DOWEL - GEAR BOX COVER	2	
17	B042486	BUSH	2	
18	822051647	SPRING PIN 5X16	1	
19	880305509R	DEEP GROOVE BALL BEARING 30X55X13	1	
20	841005207	CIRCLIP DIA 52 (INT)	1	
20	841005506	CIRCLIP DIA. 55 (INT)	1	
21	1A000236	OIL SEAL	1	
21	1A000236	OIL SEAL	1	
22	1A009926	REVERSE SHAFT	1	
23	127404016R	GEAR R.C.	1	
24	127571015R	IDLER GEAR (PAS)	1	
25	842002501	CIRCLIP DIA 25 (EXT)	1	
25	842003000	CIRCLIP DIA. 30 (EXT.)	1	
26	1A014592	OIL DIPSTICK	1	New aluminiun clutch
27	127016015	DIPSTICK SEALING WASHER	1	
28	6450	EXT CIRCLIP DIA 48	1	
29	7066R	RADIAL BALL BEARING	1	
30	111353	CIRCLIP	1	
30A	16406	SPRING WASHER M6 OD12	1	
31	1A011810	DIFFERENTIAL CROWN (PASS.)	1	

58

Print Date: 05-Oct-2022

PLATE-27

DIFFERENTIAL UNIT, FARE METER HOUSING, SPEEDO DRIVE

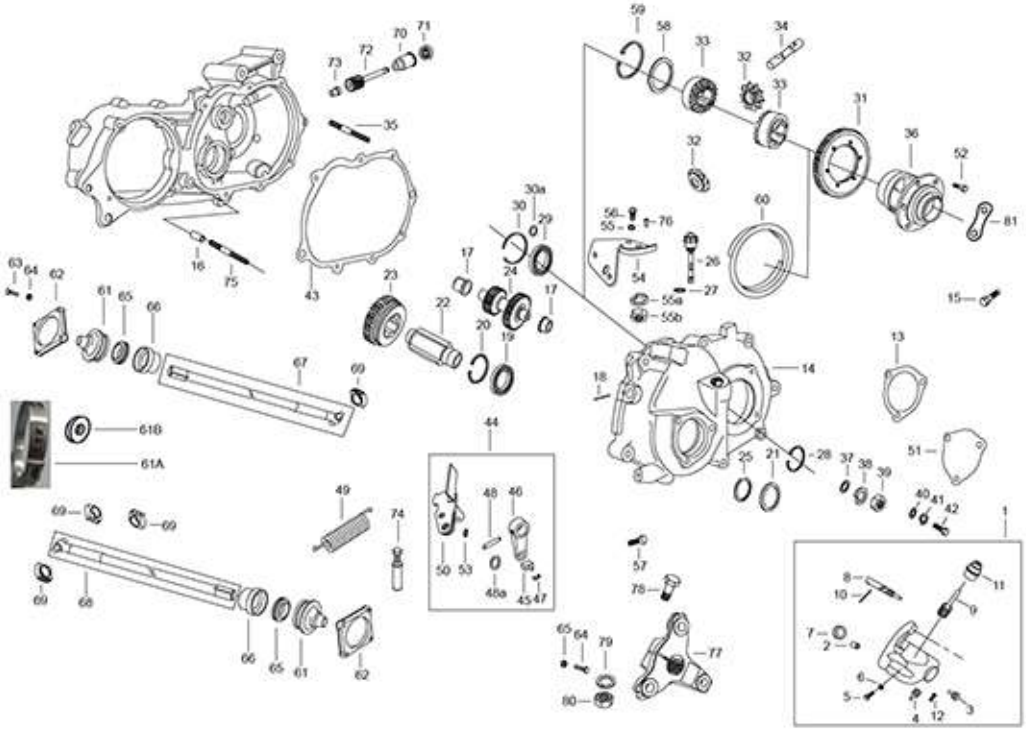
59
58
33
34
32
33
31
36
52
81
73
72
70
71
35
32
30a
30
29
56
55
76
60
26
27
54
55a
55b
16
75
43
23
17
24
17
22
20
19
63
64
62
61
65
66
67
69
15
13
14
18
61B
61A
44
25
21
28
37
38
39
51
40
41
42
1
49
74
69
69
69
68
50
53
48
46
48a
45
47
57
78
8
10
11
9
7
2
6
5
4
12
3
65
64
79
77
80
66
65
61
62

59

Print Date: 05-Oct-2022

PLATE-27

DIFFERENTIAL UNIT, FARE METER HOUSING, SPEEDO DRIVE

Fig. No.	Part No.	Description	Qty	Remarks
32	NS-	NOT SERVICEABLE PART	2	Serviceable as Kit - 940028
33	NS-	NOT SERVICEABLE PART	2	Serviceable as Kit - 940028
33A	940028	GEAR SUN AND DIFFERENTIAL GEAR	2	NI Cosist of sr,no 32 & 33
34	132129	PIN	1	
35	B042798	FLANGED HEXAGONAL HEAD SCREW M8X45	8	
36	288730	DIFFERENTIAL CAGE	1	
37	808000826	PLAIN WASHER M8	8	
38	16406	SPRING WASHER M6 OD12	10	
39	12136	NUT / NYLOCK NUT M5	8	
40	3056	PLAIN WASHER M6 OD12	3	
41	16406	SPRING WASHER M6 OD12	3	
42	31088	HEX HD SCREW M6 X 16 CL 8.8 (811061623)	3	
43	127141016	GASKET G. B. COVER	1	
44	SP1A0101404	INVERTER LEVER SECTOR ASSY PASS -SPD	1	
45	120321019	SLIDER BLOCK R.C. GEAR	1	
46	127151011	LEVER(R C GEAR) (41738)	1	
47	843000500	CIRCLIP DIA.5 (EXT) TYPE C	1	
47	843000500	CIRCLIP DIA.5 (EXT) TYPE C	1	
48	17702	SPRING PIN	1	
48A	1A005176	O- RING	2	
49	127111011	REVERSE GEAR SPRING	1	
50	1A010139	SECTOR PLATE ASSLY COMP	1	
51	220364010	COVER PLATE (DIFF. COVER)- V. E.	1	NA for Pass.
52	1A004807	SCREW	6	
53	825080209	O - RING - (SECTOR PLATE ASSY.)	1	
54	128306015	STOPPER PLATE R.C. LEVER	1	
55	16404	SPRING WASHER M4	2	
55A	3054	PLAIN WASHER	2	
55B	20104	HEX NUT M4	2	
56	31088	HEX HD SCREW M6 X 16 CL 8.8 (811061623)	2	
57	128307019	BOLT R.C. SPRING RETAINING	1	
58	220575	WASHER 65X3	1	
59	132134	CIRCLIP	1	
60	1A011778	SATELLITE PIN RETAINER	1	
60A	1A000612	RETAINER SCREW - PRE COATED	2	NI

60

Print Date: 05-Oct-2022

PLATE-27

DIFFERENTIAL UNIT, FARE METER HOUSING, SPEEDO DRIVE

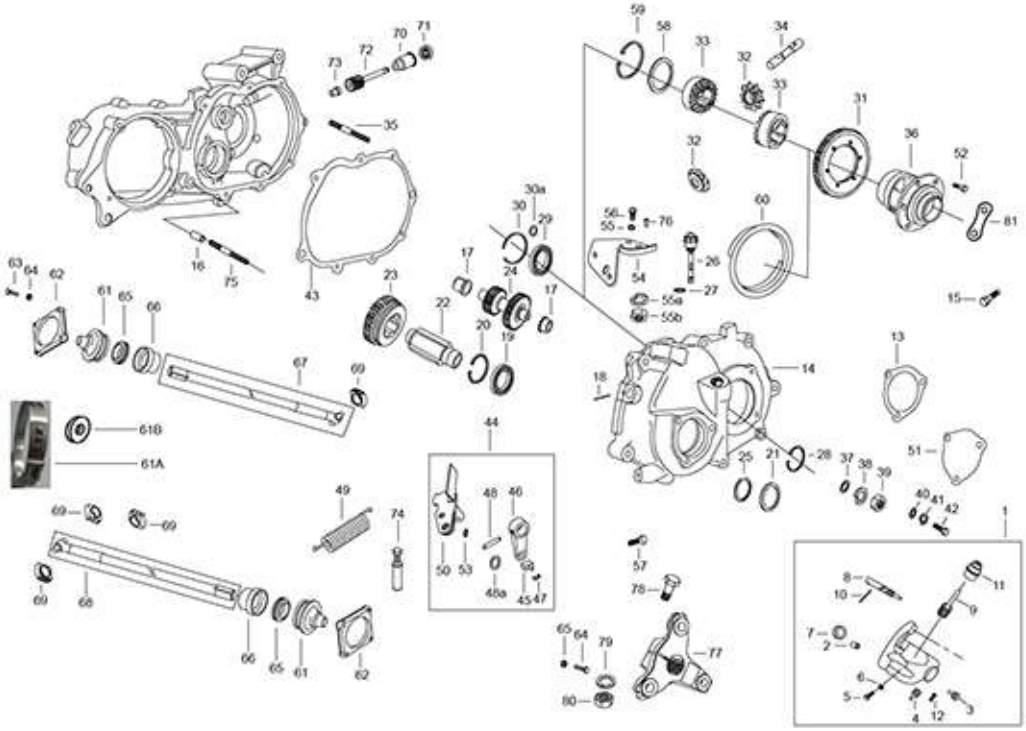
59
58
33
34
32
33
31
36
52
81
70
71
73
72
35
32
30a
30
29
56
55
76
60
26
27
54
55a
55b
16
75
43
23
17
24
17
22
20
19
63
64
62
61
65
66
67
69
15
13
14
18
61B
61A
44
25
21
28
37
38
39
40
41
42
51
1
49
74
69
69
69
68
50
53
48
46
48a
45
47
57
78
8
10
11
9
7
2
6
5
4
12
3
65
64
79
77
80
66
65
61
62

61

Print Date: 05-Oct-2022

PLATE-27

DIFFERENTIAL UNIT, FARE METER HOUSING, SPEEDO DRIVE

Fig. No.	Part No.	Description	Qty	Remarks
61	6C000016	BELLOW	2	
61A	6C000041	OTIKAR CLAMP FOR BELLOW	2	NI
61B	3056	PLAIN WASHER M6 OD12	6	NI
62	111356	COVER	2	
63	31092	HEX. HD SCREW M6X25	8	
64	16406	SPRING WASHER M6 OD12	8	
65	6C000312R	SEAL RING	2	
66	113278	BRACKET RETAINER RING (41736)	2	
67	587687	PROP. SHAFT SUB ASSY. LT (WITH PIN)	1	LH
68	587685	PROP. SHAFT SUB ASSY. RT (WITH PIN)	1	RH
69	112867R	SLIDER BLOCK PROP. SHAFT	4	
70	117401	BUSH	1	
71	117402	OIL SEAL	1	
72	117404	SPEEDOMETER GEAR	1	
73	165121014	PIN	1	
74	604560	SCREW TERMINAL ASSY. - GEAR CONTROL	1	
75	811081025	HEX HEAD SCREW M8 X 10 (DRAIN PLUG)	2	
76	119278	TERMINAL	1	
77	111498	ELASTIC HUB	1	
78	B024614	HEX HEAD BOLT M10X45 CL 10.9	2	
79	16410	SPRING WASHER	2	
80	231370	SELF BREAKING NUT M10	2	
81	B003155	LOCK PLATE	3	Not Appl.

62

Print Date: 05-Oct-2022

PLATE-28

Gear Shifter Assembly

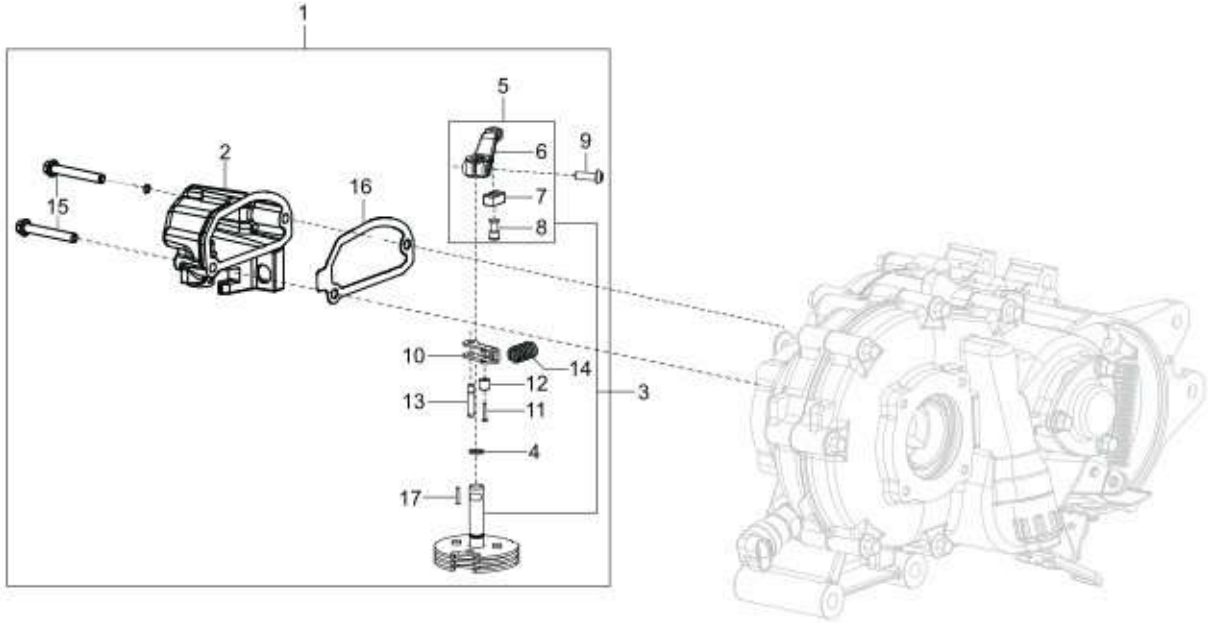
1
5
6
9
2
16
7
15
8
10
14
12
3
13
11
4
17

63

Print Date: 05-Oct-2022

PLATE-28

Gear Shifter Assembly

Fig. No.	Part No.	Description	Qty	Remarks
1	127640012	COMPLETE GEAR SHIFTER HSG ASSLY	1	
2	127641016	GEAR SHIFTER HOUSING	1	
3	SPB042620	SECTOR AND CONNECTOR PLATE AND LEVER ASSLY.	1	
4	825080209	O - RING - (SECTOR PLATE ASSY.)	1	
5	SP526020015	SLIDER BLOCK & LEVER ASSLY	1	Not Serviceable
6	526023017	GEAR SHIFTER LEVER	1	
7	126021013	SLIDER BLOCK	1	
8	126022017	PIN FOR SLIDER BLOCK	1	
9	17702	SPRING PIN	1	
10	126060019	BRACKET ASSY.	1	
11	126053016	PIN FOR ROLLER	1	
12	126052012	ROLLER	1	
13	126054010	SCREW FOR BRACKET	1	
14	126003011	SPRING GEAR SHIFTER ASSY.	1	
15	819064530	SOCKET HEAD CAP SCREW M6X45	2	
16	128081017	GASKET HOUSING GEAR SHIFTER HOUSING	1	
17	1A019553	ELASTIC PIN	1	NA

64

Print Date: 05-Oct-2022

PLATE-29

drive shaft & Wheel assly.

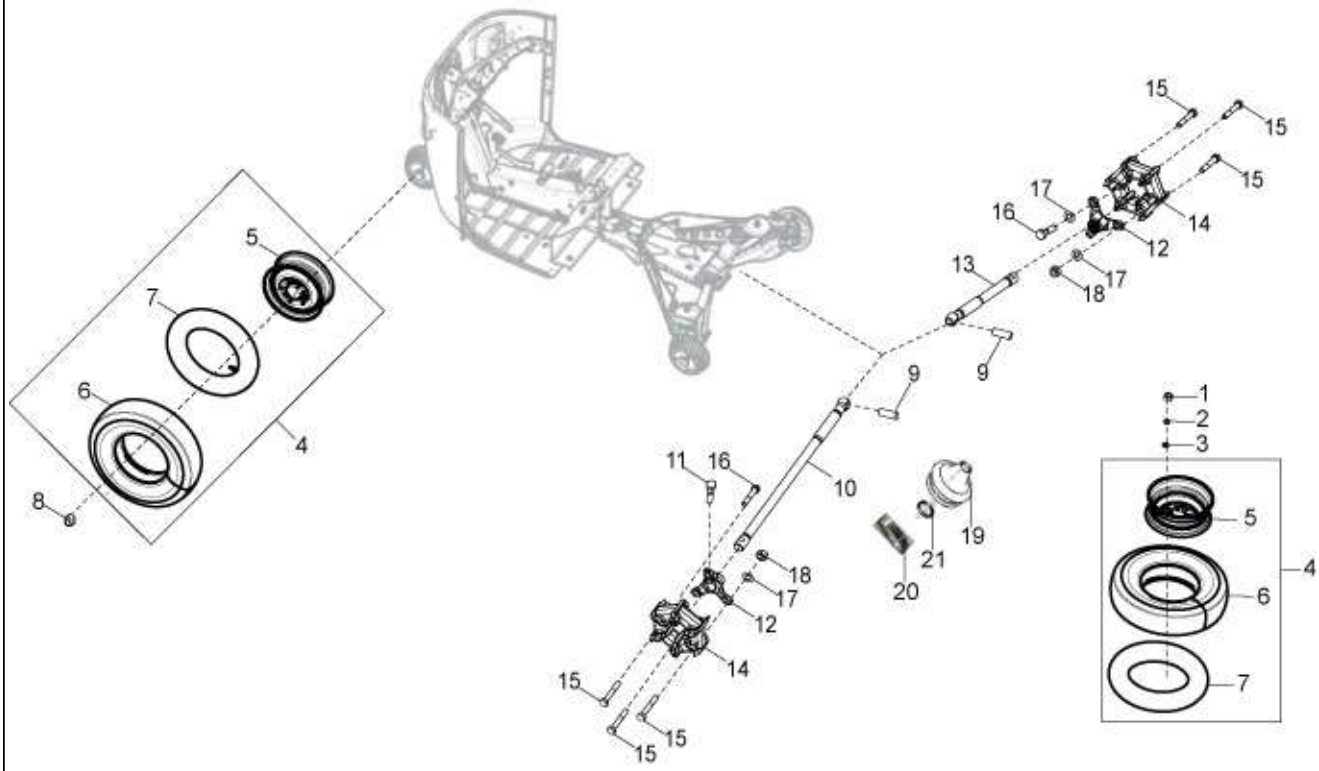
15
15
15
17
16
14
12
13
17
18
9
9
5
7
6
4
8
1
2
3
11
16
10
19
21
20
18
17
12
14
15
15
15
5
4
6
7

65

Print Date: 05-Oct-2022

PLATE-29

drive shaft & Wheel assly.

Fig. No.	Part No.	Description	Qty	Remarks
1	20108	HEX NUT M8	1	
2	13861	PLAIN WASHER 20X8.2X2.5	1	
3	016408	SPRING WASHER	1	
4	652027R	WHEEL ASSLY 501	4	
5	644973R	WHEEL RIM ASSY.	4	
6	587971	TYRE 4.50 X 10 8 PR	4	
7	151924	INNER TUBE TYRE 4.5 X 10 INCH	4	
8	660931	WHEEL NUT (M12 X 1.5)	9	
9	113099	PIVOT	2	
10	587687	PROP. SHAFT SUB ASSY. LT (WITH PIN)	1	
11	B024614	HEX HEAD BOLT M10X45 CL 10.9	6	
12	111498	ELASTIC HUB	2	
13	587685	PROP. SHAFT SUB ASSY. RT (WITH PIN)	1	
14	643576	FLEXIBLE COUPLING	2	
15	15594	HEX HDD BOLT M10 X 35	6	
16	B024373	ALLEN BOLT M10X65 CL 10.9	6	
17	3068	PLAIN WASHER	12	
18	136426	NUT WITH COLLAR	12	
19	6C000016	BELLOW	2	
20	6C000041	OTIKAR CLAMP FOR BELLOW	2	
21	6C000312R	SEAL RING	2	

66

Print Date: 05-Oct-2022

PLATE-30
ENGINE SUPPORT

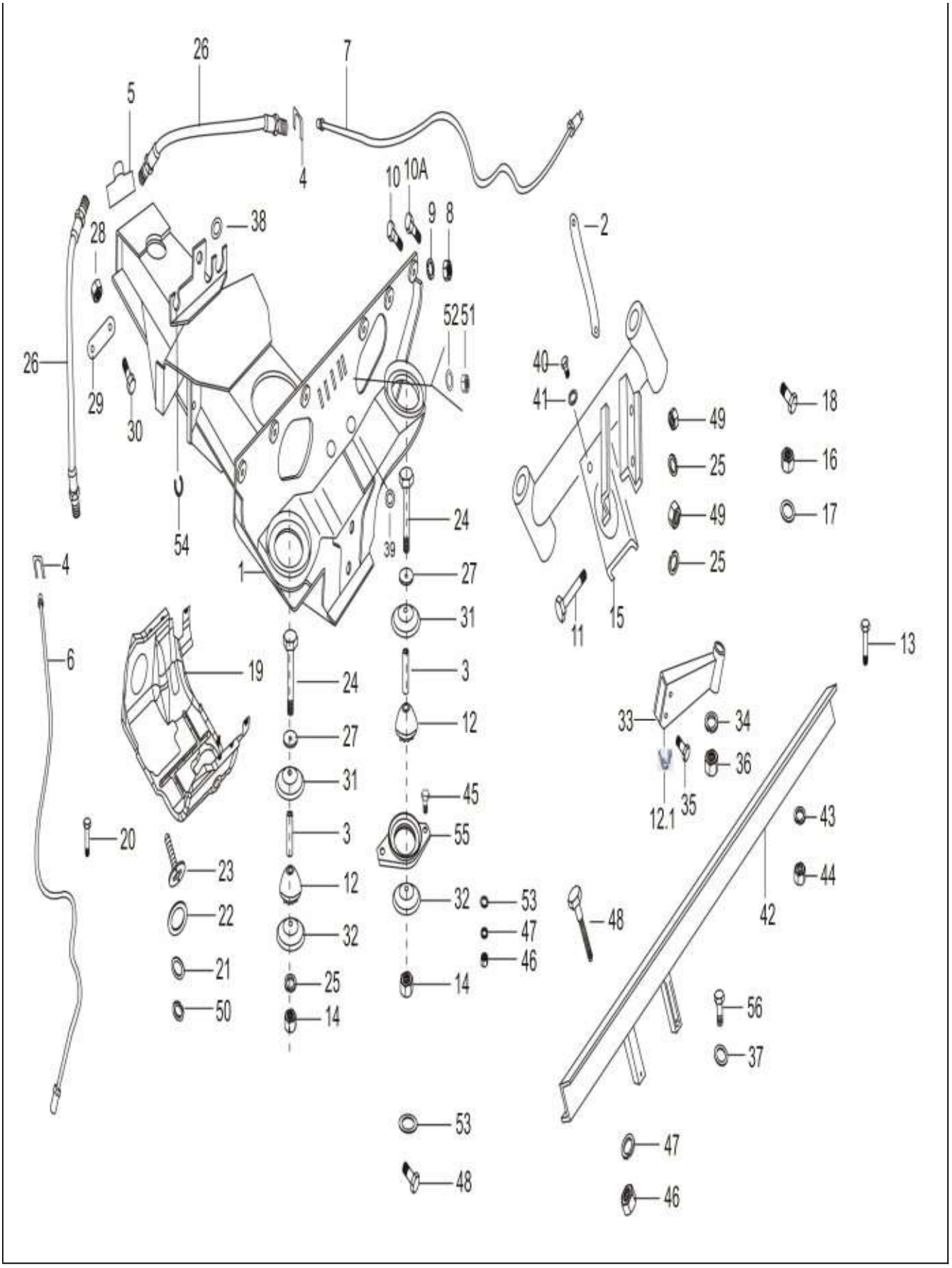
26
7
5
4
10
10A
9
8
38
2
28
52
51
26
29
30
40
41
18
49
25
16
49
17
54
39
24
4
1
27
25
31
11
15
13
6
19
24
3
12
33
34
27
36
31
45
12.1
35
43
20
3
55
23
12
32
53
44
22
32
47
48
42
46
21
25
14
50
14
56
37
53
47
48
46

67

Print Date: 05-Oct-2022

PLATE-30
ENGINE SUPPORT

Fig. No.	Part No.	Description	Qty	Remarks
1	6C000382	FRAME ASSLY SUS.& ENGINE SUPPORT	1	
2	644839R	EARTHING CABLE	1	
3	267065	SPACER FRONT	3	
4	136916	PLATE FOR RETAINING THE BRAKE FLEX. PIPE	3	
5	643692	THREE WAY UNION	1	
6	644813	BRAKE PUMP TUBE OF LEFT REAR WHEEL	1	
7	644812	BRAKE PUMP TUBE OF RIGHT REAR WHEEL	1	
8	20108	HEX NUT M8	6	
9	16408	SPRING WASHER M8	6	
10	31119	HEX HD SCREW M8 X 25	6	
10A	632247	HEX HDD SCREW M10X30 CC8.8	2	
11	604948	HEX.HDD BOLT M8 X 110 WITH POINTING	2	
12	6A001169	AVM ENGINE MOUNTING FRONT RH	2	
12.1	6A002144	AVM ENGINE MOUNTING - REAR	1	
13	272178	HEX. HDD BOLT M8 X 122 CL 10.9	1	
14	15335	HEX HD NUT M8	3	
15	6A002024	FRONT CROSS MEMBER ASSLY	1	
16	231370	SELF BREAKING NUT M10	2	
17	286328	PLAIN WASHER 20X10.2X2	2	
18	568689	HEX HEAD BOLT M10X100	2	
19	569182	ENGINE COVER	1	
20	604606	HEX HD. SCREW M5X20 CL8.8	2	
21	3055	PLAIN WASHER M5	3	
22	6078	PLAIN WASHER 12 X 5.2 X 1	3	
23	15911	PAN SELF TAP SCREW 8SG X 16 AB	6	
24	272178	HEX. HDD BOLT M8 X 122 CL 10.9	2	
25	16408	SPRING WASHER M8	3	
26	644814R	FLEXIBLE BRAKE HOSE	2	
27	2383	PLAIN WASHER M20X8.5X2	4	
28	231370	SELF BREAKING NUT M10	2	
29	632299	PLATE	2	
30	31159	HEX HD SCREW M10 X 35 CC 8.8	2	
31	569377	PLATE	2	
32	569244	PLATE	2	
33	6A002028	REAR ENGINE SUPPORT ARM ASSLY.	1	

68

Print Date: 05-Oct-2022

PLATE-30
ENGINE SUPPORT

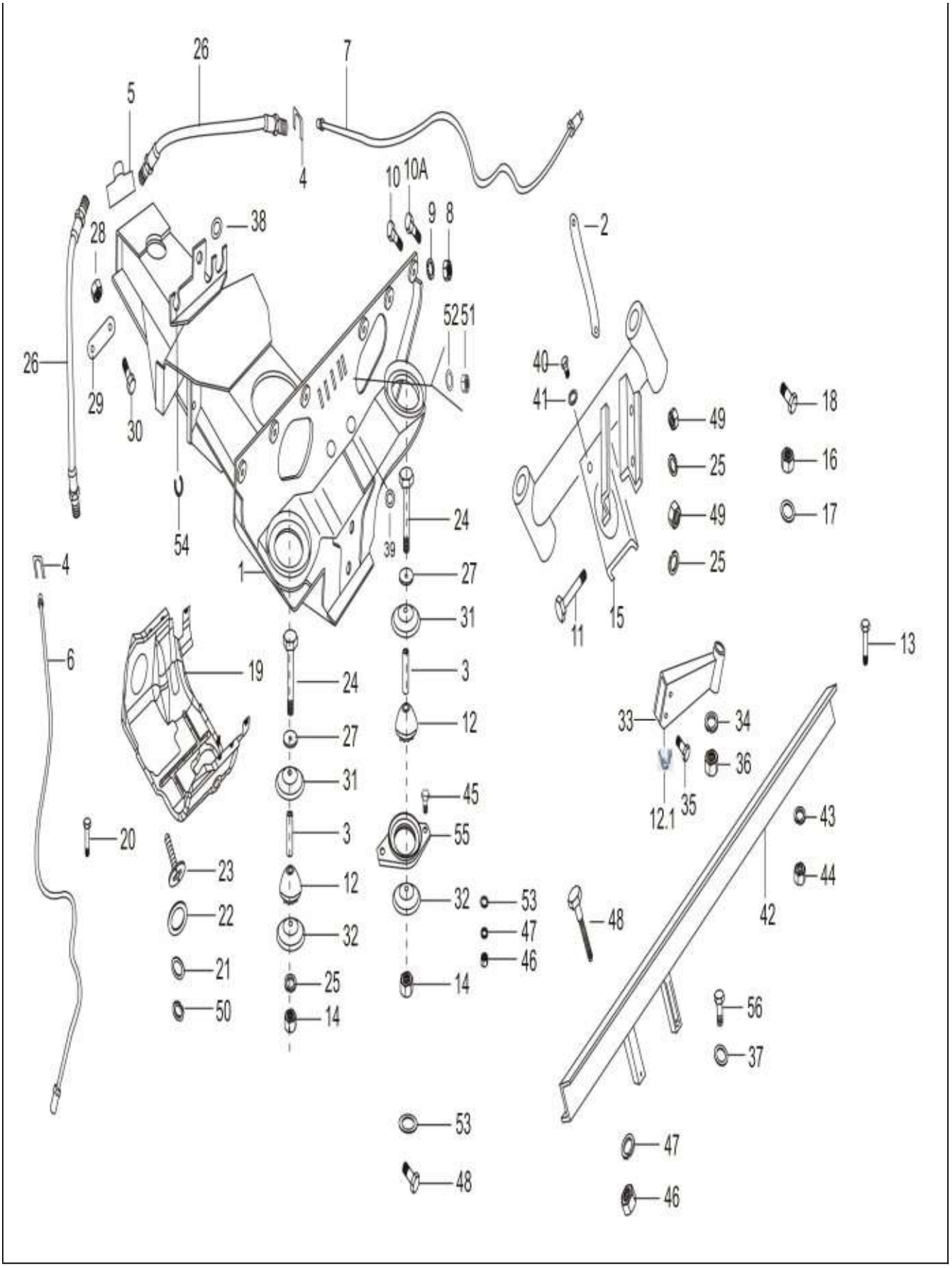
26
7
5
4
10
10A
9
8
38
2
28
52
51
26
29
30
40
41
49
18
25
16
49
17
54
39
24
4
1
27
25
31
11
15
13
6
19
24
3
12
33
34
27
36
31
45
12.1
35
43
20
3
55
23
12
32
53
44
22
32
47
48
42
46
21
25
14
50
14
56
37
53
47
48
46

69

Print Date: 05-Oct-2022

PLATE-30
ENGINE SUPPORT

Fig. No.	Part No.	Description	Qty	Remarks
34	16410	SPRING WASHER	2	
35	B024614	HEX HEAD BOLT M10X45 CL 10.9	2	
36	20110	HEX NUT M10	2	
37	286328	PLAIN WASHER 20X10.2X2	6	
38	178610	GROMMET	1	
39	15478	GROMMET4	2	
40	31116	HEX HD. SCREW M8X16	3	
41	3058	PLAIN WASHER 15X8.4X1.5	1	
42	6A002022	ASSY. REAR CROSS MEMBER	1	
43	16408	SPRING WASHER M8	2	
44	20108	HEX NUT M8	2	
45	31118	SCREW M8X20	2	
46	20108	HEX NUT M8	4	
47	16410	SPRING WASHER	6	
48	568260	HEX HD BOLT M8X160 CL 8.8	2	
49	20110	HEX NUT M10	4	
50	16405	SPRING WASHER M5	2	
51	20105	PLAIN NUT M5	2	
52	3055	PLAIN WASHER M5	2	
52	6078	PLAIN WASHER 12 X 5.2 X 1	2	
53	286328	PLAIN WASHER 20X10.2X2	2	
54	568140	GROMMET	1	
55	B003286	REAR AVM SUPPORT BKT. ASSY.	2	
56	568689	HEX HEAD BOLT M10X100	2	

70

Print Date: 05-Oct-2022

PLATE-31

DASHBOARD ASSEMBLY & Battery Mounting

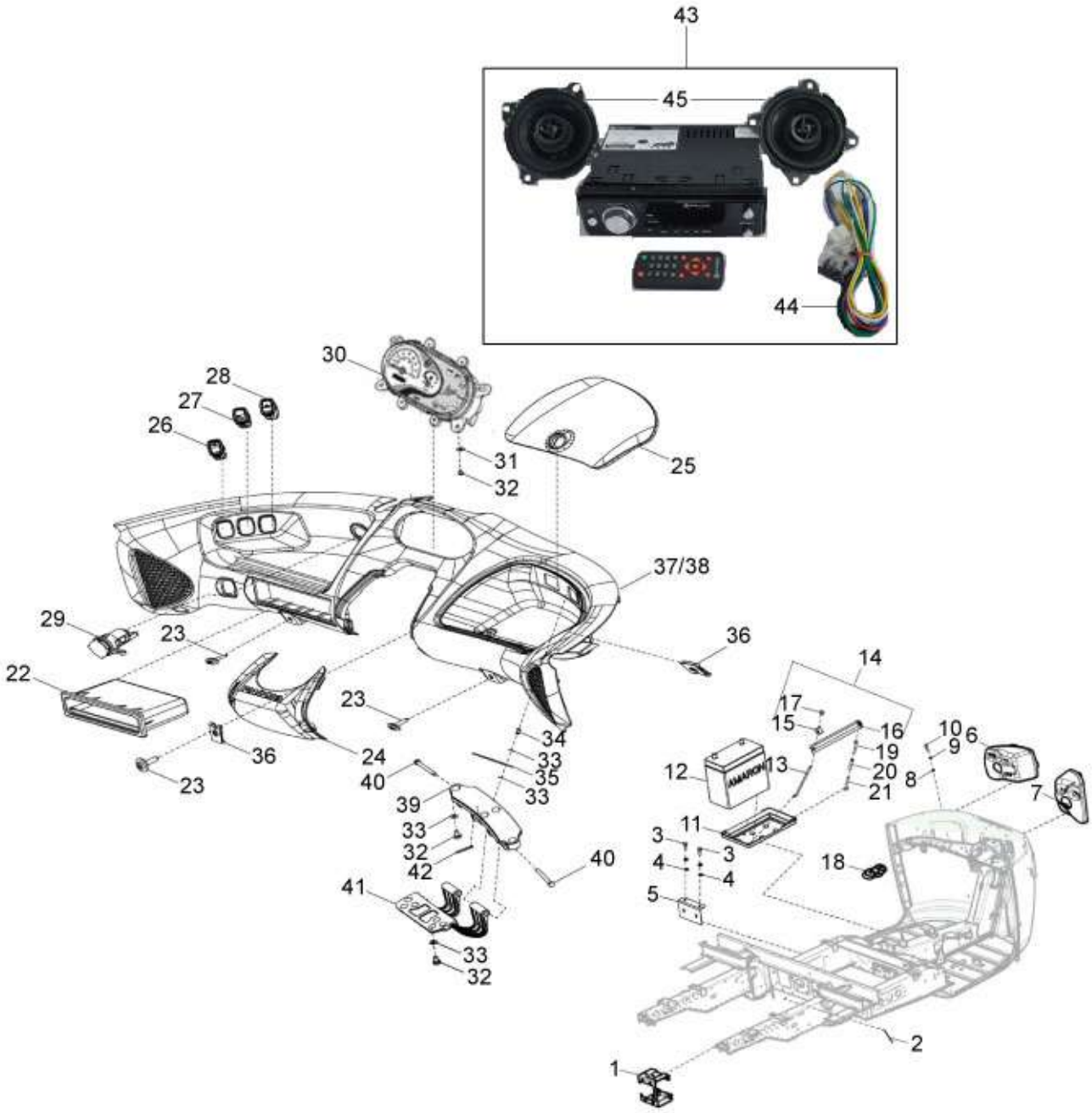
43
45
44
30
28
27
26
31
32
25
37/38
29
23
36
22
14
17
15
16
10
9
6
23
34
33
35
33
19
20
21
8
7
12
13
36
24
23
40
39
33
32
42
40
11
3
4
3
4
18
41
5
33
32
2
1

71

Print Date: 05-Oct-2022

PLATE-31

DASHBOARD ASSEMBLY & Battery Mounting

Fig. No.	Part No.	Description	Qty	Remarks
1	6D001226	BKT, FUSE BOX , ASSEMBLY	1	
2	72515	CLAMP	10	
3	31088	HEX HD SCREW M6 X 16 CL 8.8 (811061623)	2	
4	16406	SPRING WASHER M6 OD12	6	
5	6D001237	BKT, IP TO MAIN HARNESS PARKING	1	
6	616896	COVER LIGHT SOCKET LEFT	1	
7	616897	COVER LIGHT SOCKET RIGHT	1	
8	808000826	PLAIN WASHER M8	3	
9	16408	SPRING WASHER M8	3	
10	30072	HEX HEAD BOLT M8 X 35	3	
11	6D000597	BATTERY TRAY	1	
12	6D000015R	BATTERY	1	For Auto+ (D+5) &Auto DXL
13	B077884	TENSION ROD - LONG	1	Auto Dx (D+3)
14	604691	ANGLE BAR ASSLY	1	NI. Consist. of sr. no.15 &16
15	568093	BATTERY LOCK STOPPER	1	Not Serviceable
16	604692	ANGLE BAR	1	Not Serviceable
17	13861	PLAIN WASHER 20X8.2X2.5	2	
18	940118	BATTERY , SPARE WHEEL LOCK WITH KEY	1	
19	B077885	TENSION ROD ASSY	1	Included 20,21
20	604890	HALF TIE ROD ASSY.	1	
21	B077883	TENSION ROD- SHORT	2	Under Development
22	B073812	UTILITY BOX	1	
23	660168	PAN SELF TP. SCREW 10 SGX13AB	16	
24	B073811	STEERING COLUMN COVER	1	
25	B073810	GLOVE BOX COVER	1	
26	B073478R	SWITCH 3 POSITION	1	
27	B073479R	WIPER MOTOR SWITCH/ SWITCH WIPER MOTOR	1	
28	B073481R	HAZARD WARNING SWITCH WITH CROWN CAP (12V)(VE)	1	
29	B074905	MOBILE CHARGER	1	
30	6D001458	INSTRUMENT CLUSTER	1	
31	6078	PLAIN WASHER 12 X 5.2 X 1	4	
32	661925	PHILIP PAN HEAD SCREW (M5 X 0.8 X 1.6)	4	
33	3054	PLAIN WASHER	4	
34	567893	POP RIVET 4 X 9.5	2	
35	643691	BOLT LOCK PLATE	1	

72

Print Date: 05-Oct-2022

PLATE-31

DASHBOARD ASSEMBLY & Battery Mounting

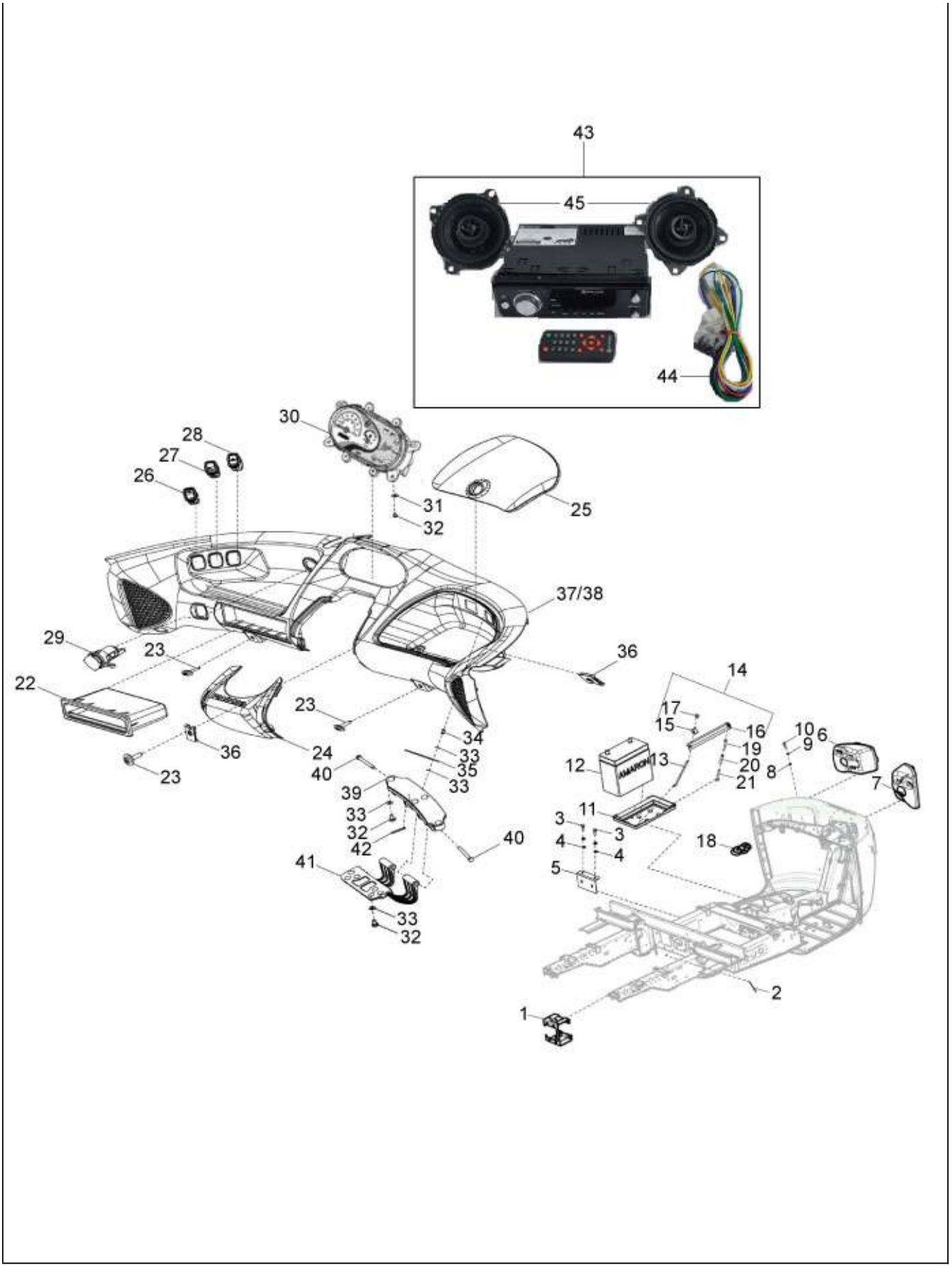
43
45
44
30
28
27
26
31
32
25
37/38
29
23
36
22
14
17
15
16
10
9
6
23
34
33
35
33
19
20
21
8
7
12
13
36
24
23
40
39
33
32
42
40
11
3
4
3
4
18
41
5
33
32
2
1

73

Print Date: 05-Oct-2022

PLATE-31

DASHBOARD ASSEMBLY & Battery Mounting

Fig. No.	Part No.	Description	Qty	Remarks
36	8080	SPRING PLATE	7	
37	SPG6B052043	DASHBOARD ASSLY. COMPLETE	1	For D+3
38	6B003176	ASSLY DASHBOARD WITH HINGE MTG PLATE	1	For D+3
39	B073813	HINGE MTG. BKT.	1	
40	B074262	PIN	2	
41	B073814	HINGE	1	
42	567920	SPLIT PIN	2	
43	KIT6D000952 UP	KIT ELECTRONIC AUDIO SYSTEM AND PIGTAIL	1	
44	6D000948	PIGTAIL, MUSIC SYSTEM	1	
45	6D000952	ELECTRONIC AUDIO SYSTEM	1	

74

Print Date: 05-Oct-2022

PLATE-32

Main frame Assly & Passenger Body & Doors Ape Auto Dx & DXL(D+3)

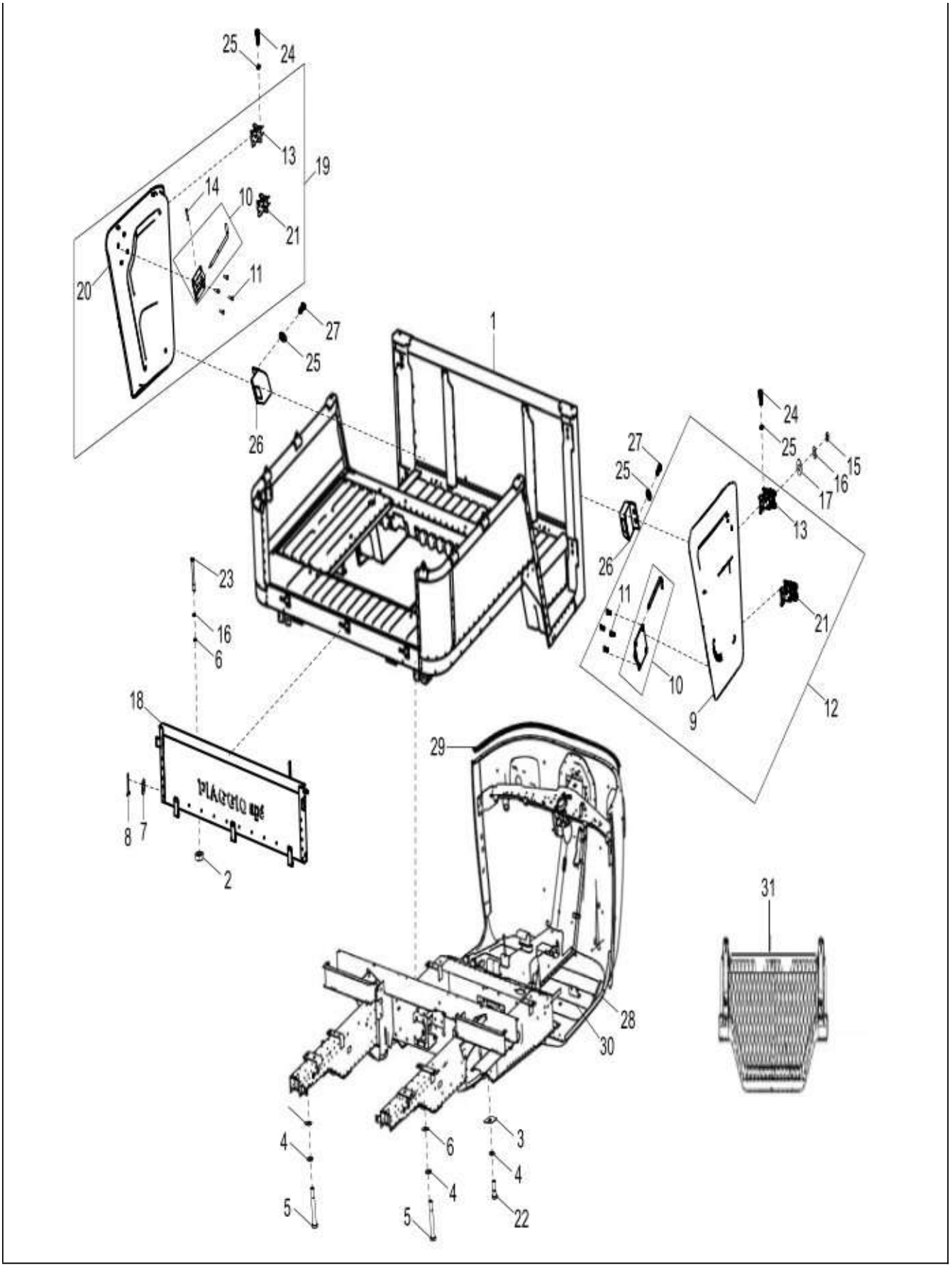
25
24
13
19
14
10
21
20
11
27
25
1
26
24
27
25
15
16
17
25
13
26
23
11
16
21
6
10
18
9
12
29
PIAGGIO ape
8
7
2
31
28
30
4
6
3
4
4
5
5
22

75

Print Date: 05-Oct-2022

PLATE-32

Main frame Assly & Passenger Body & Doors Ape Auto Dx & DXL(D+3)

Fig. No.	Part No.	Description	Qty	Remarks
1	6B003727BL	PASSENGER BODY WITH TAIL GATE CLS BS6-BL	1	Auto dx(D+3)
1	6B003727BW	PASSENGER BODY WITH TAIL GATE CLS BS6-BW	1	Auto dx(D+3)
1	6B003727BY	PASSENGER BODY WITH TAIL GATE CLS BS6-BY	1	Auto dx(D+3)
1	6B003727EG	PASSENGER BODY WITH TAIL GATE CLS BS6-EG	1	Auto dx(D+3)
1	6B003727GY	PASSENGER BODY WITH TAIL GATE CLS BS6-GY	1	Auto dx(D+3)
1	6B003727NB	PASSENGER BODY WITH TAIL GATE CLS BS6-NB	1	Auto dx(D+3)
1	6B003727CB	PASSENGER BODY WITH TAIL GATE CLS BS6-CB	1	Auto dx(D+3)
1	6B003727WR	PASSENGER BODY WITH TAIL GATE CLS BS6-WR	1	Auto dx(D+3)
1	6B003727CO	PASSENGER BODY WITH TAIL GATE CLS BS6-CO	1	Auto dx(D+3)
2	20108	HEX NUT M8	1	
3	604785	SUPPORT PLATE	4	
4	3056	PLAIN WASHER M6 OD12	12	
5	30072	HEX HEAD BOLT M8 X 35	2	
6	808000826	PLAIN WASHER M8	2	
7	3057	PL. WASHER 13 X 7 X 1	1	
8	12778	SPLIT PIN 3 X 20	1	
9	6B001595ED	DOOR SHELL ASSLY RH	1	Not Serviceable
10	6B001599	TOWER BOLT ASSLY	1	
11	31088	HEX HD SCREW M6 X 16 CL 8.8 (811061623)	4	
12	6B001597ED	PASSENGER DOOR COMPLETE ASSLY RH	1	
13	6B001520	DOOR HINGE ASSLY UPPER	1	
14	17702	SPRING PIN	1	
15	20106	HEX NUT M6	8	
16	16408	SPRING WASHER M8	2	
17	2383	PLAIN WASHER M20X8.5X2	4	
18	B042726ED	REAR HATCH WITH LATCH BOLT PASS DTL-CED	1	
19	6B001596ED	PASSENGER DOOR COMPLETE ASSLY LH	1	
20	6B001594ED	DOOR SHELL ASSLY LH	1	Not Serviceable
21	6B001455	HINGE ASSLY-PASS DOOR LOWER	1	
22	30072	HEX HEAD BOLT M8 X 35	2	
23	B008478	HEX HEAD SCREW M8X55 BLACK PASS.	4	
24	31089	HEX HEAD SCREW M6X18 CL 8.8	4	
25	16603	PLAIN WASHER (METALLIC)	8	
26	6B001627	DOOR TRIMS & FITTMENTS (501)	2	
27	B041668	SELF-TAPPING SCREW AB 4.8 X 19	6	

76

Print Date: 05-Oct-2022

PLATE-32

Main frame Assly & Passenger Body & Doors Ape Auto Dx & DXL(D+3)

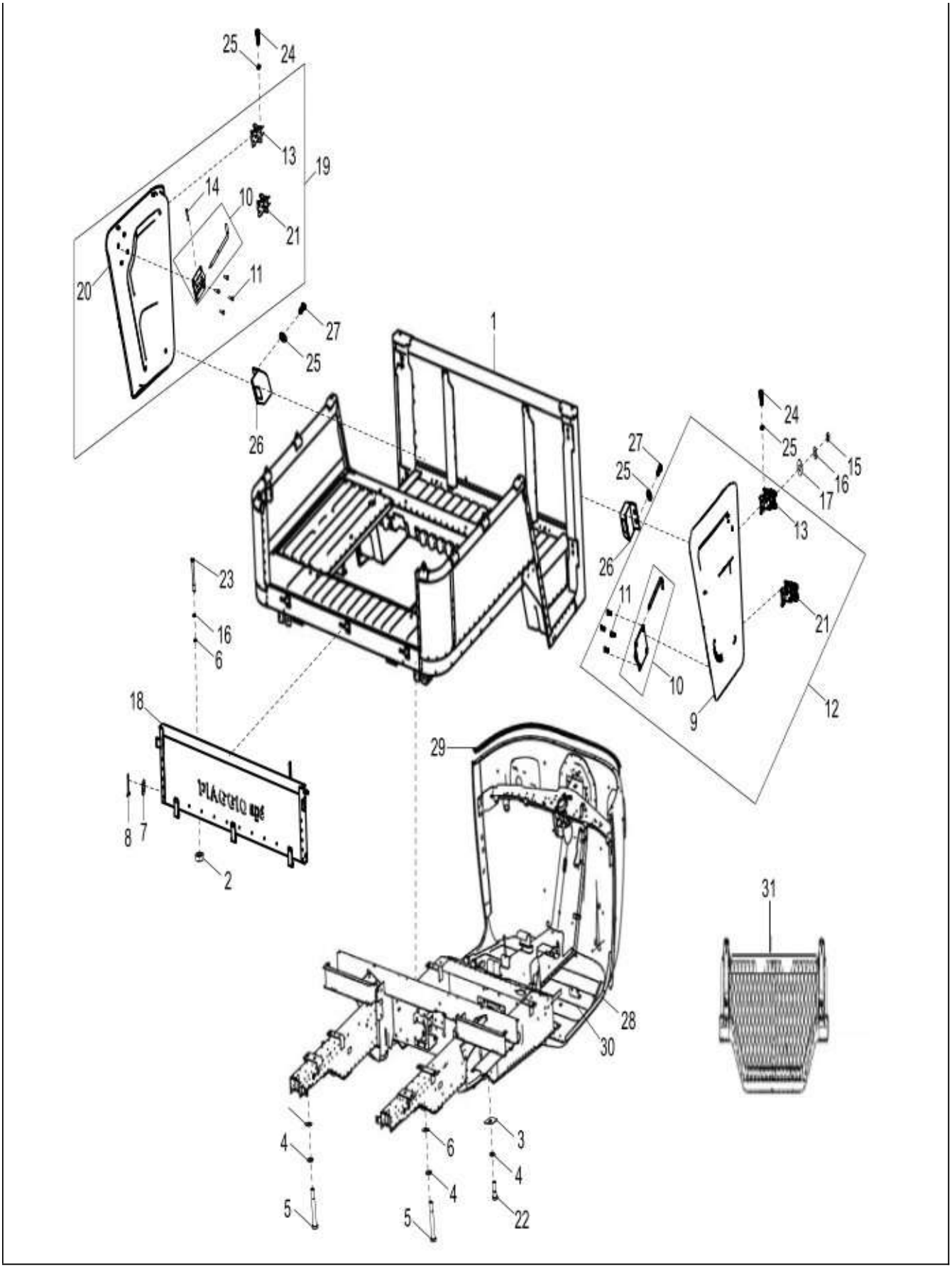
25
24
13
19
14
10
21
20
11
27
25
1
26
24
27
25
15
16
17
25
13
26
23
11
16
21
6
10
18
9
12
29
PIAGGIO ape
8
7
2
31
28
30
4
6
3
4
4
5
5
22

77

Print Date: 05-Oct-2022

PLATE-32

Main frame Assly & Passenger Body & Doors Ape Auto Dx & DXL(D+3)

Fig. No.	Part No.	Description	Qty	Remarks
28	6B003726BL	MAIN FRAME WITH HSRP APE AUTO DX CLS BS6-BL	1	Appli. For Auto Dx D+3
28	6B003726BW	MAIN FRAME WITH HSRP APE AUTO DX CLS BS6-BW	1	Appli. For Auto Dx D+3
28	6B003726BY	MAIN FRAME WITH HSRP APE AUTO DX CLS BS6-BY	1	Appli. For Auto Dx D+3
28	6B003726EG	MAIN FRAME WITH HSRP APE AUTO DX CLS BS6-EG	1	Appli. For Auto Dx D+3
28	6B003726GY	MAIN FRAME WITH HSRP APE AUTO DX CLS BS6-GY	1	Appli. For Auto Dx D+3
28	6B003726NB	MAIN FRAME WITH HSRP APE AUTO DX CLS BS6-NB	1	Appli. For Auto Dx D+3
28	6B003726CB	MAIN FRAME WITH HSRP APE AUTO DX CLS BS6-CB	1	Appli. For Auto Dx D+3
28	6B003726WR	MAIN FRAME WITH HSRP APE AUTO DX CLS BS6-WR	1	
28	6B003726CO	MAIN FRAME WITH HSRP APE AUTO DX CLS BS6-CO	1	
29	B024474	BEADDING LINING	1	
30	587905PC	CABIN FLOOR SUB-ASSY.	1	
31	6B001132	REAR VISUAL BARRIER ASSLY	1	

78

Print Date: 05-Oct-2022

PLATE-33

Windshield /Glass/ Seats/ Carpets/Mirrors &Engine Door.

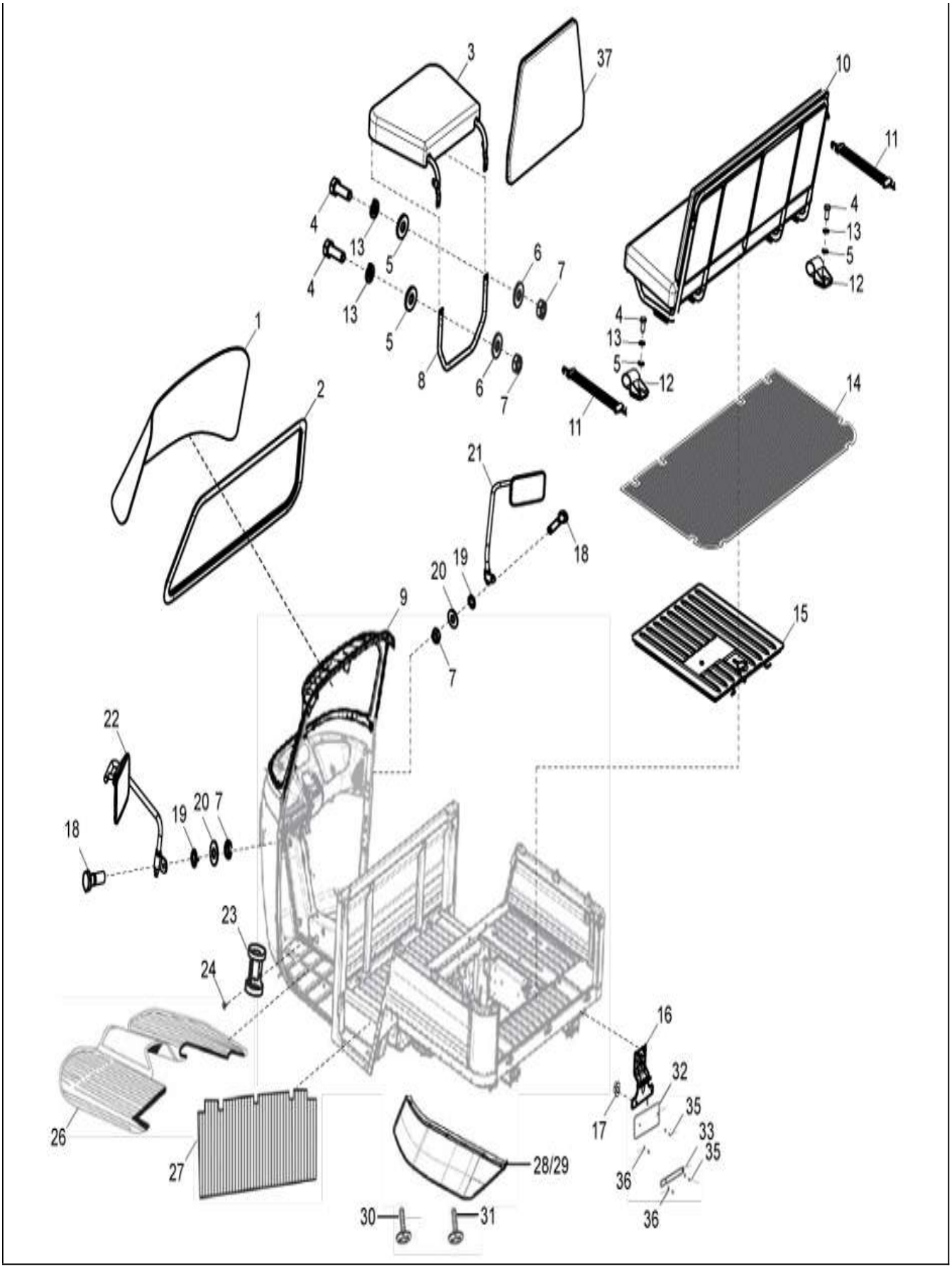
3
37
10
11
4
13
5
12
6
7
1
2
8
14
21
18
20
19
9
15
22
23
24
16
32
35
17
33
26
27
28/29
36
30
31

79

Print Date: 05-Oct-2022

PLATE-33

Windshield /Glass/ Seats/ Carpets/Mirrors &Engine Door.

Fig. No.	Part No.	Description	Qty	Remarks
1	6B001921	LAMINATED WINSHIELD GLASS	1	Appli.for New Windshield 6B000142ED
1	587963	LAMINATED WINSHIELD GLASS	1	Appli.for old Windshield B076098ED
2	109012	WIND SHIELD PACKING	1	for Ape auto Dx (D+3)
3	6B000485	DRIVER SEAT ASSLY	1	Included 5 , 7 , 8 ,9,13
4	31119	HEX HD SCREW M8 X 25	2	
5	16408	SPRING WASHER M8	2	
6	2383	PLAIN WASHER M20X8.5X2	4	
7	20108	HEX NUT M8	2	
8	B078044	DRIVER SEATSUPPORT PIPE (PASS)	1	Under Development
9	6B000387ED	WINDSHIELD ASSLY(MODI.) - ED	1	Appli.for New Windshield Glass 6B001921
9	B076098ED	WINDSCREEN FRAME ASSLY - C/O 501 BSIV DSL	1	Appli.for old Windshield Glass 587963
10	B075444	PASS. SEAT ASSLY (WIRE MESH)	1	
11	587907	BELT,PASSENGER SEAT RETAINER	2	
12	569096	HINGE S/A	2	
13	3058	PLAIN WASHER 15X8.4X1.5	2	
14	B009701	PASS. SPACE REAR CARPET (V.E)	1	
15	660207ED	ENGINE INSPECTION DOOR 501 CNG/LPG	1	
16	6B001118	BRACKET ASSLY-REAR HSRP MTG	1	
17	261323	NUT	2	
18	30072	HEX HEAD BOLT M8 X 35	2	
19	12540	SPRING WASHER M8	2	
20	13861	PLAIN WASHER 20X8.2X2.5	2	
21	6B001496R	RIGHT REAR-VIEW MIRROR (D+3)	1	for Ape auto Dx (D+3)
22	6B001495R	LEFT REAR-VIEW MIRROR (D+3)	1	for Ape auto Dx (D+3)
23	645141	BOTTLE CARRIER STAND	1	
24	660168	PAN SELF TP. SCREW 10 SGX13AB	2	
25	118447	FRONT PACKING	2	NI
26	587662	CARPET	1	
27	661493	PASSENGER COMPARTMENT CARPET (UPGRADE)	1	
28	6B000557	REAR RH FENDER	1	
29	6B003967	REAR LH FENDER	1	
30	15911	PAN SELF TAP SCREW 8SG X 16 AB	12	
31	14628	CSK SELF TP.SCREW 6SG X 16 AB	28	
32	6B001129	REGISTRATION NUMBER PLATE(HSRP)	2	
33	6B001140	BRACKET ASSLY FRONT HSRP MTG	1	

80

Print Date: 05-Oct-2022

PLATE-33

Windshield /Glass/ Seats/ Carpets/Mirrors &Engine Door.

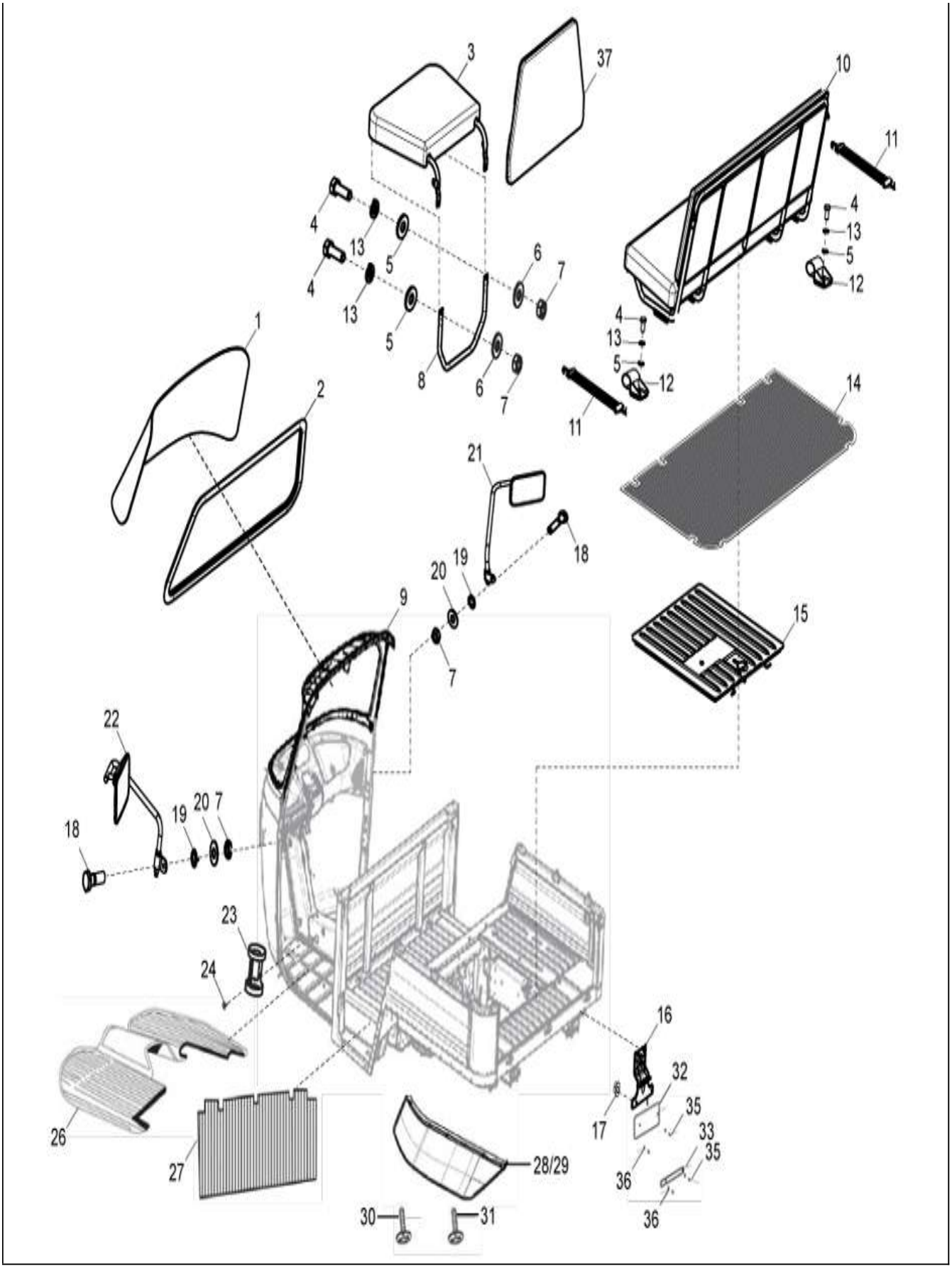
3
37
10
11
4
13
5
12
6
7
1
2
8
14
21
18
20
19
9
15
22
23
24
16
32
35
17
33
36
26
27
28/29
30
31

81

Print Date: 05-Oct-2022

PLATE-33

Windshield /Glass/ Seats/ Carpets/Mirrors &Engine Door.

Fig. No.	Part No.	Description	Qty	Remarks
34	6D000374	PIGTAIL ,LICENCE PLATE LAMP	1	NI
35	30074	HEX HEAD BOLT M8 X 40 CL 8.8	2	
36	3058	PLAIN WASHER 15X8.4X1.5	2	
37	661627	DRIVER BACK REST (PASS.) (VE)	1	

82

Print Date: 05-Oct-2022

PLATE-34

Hood frame MUDGUARD

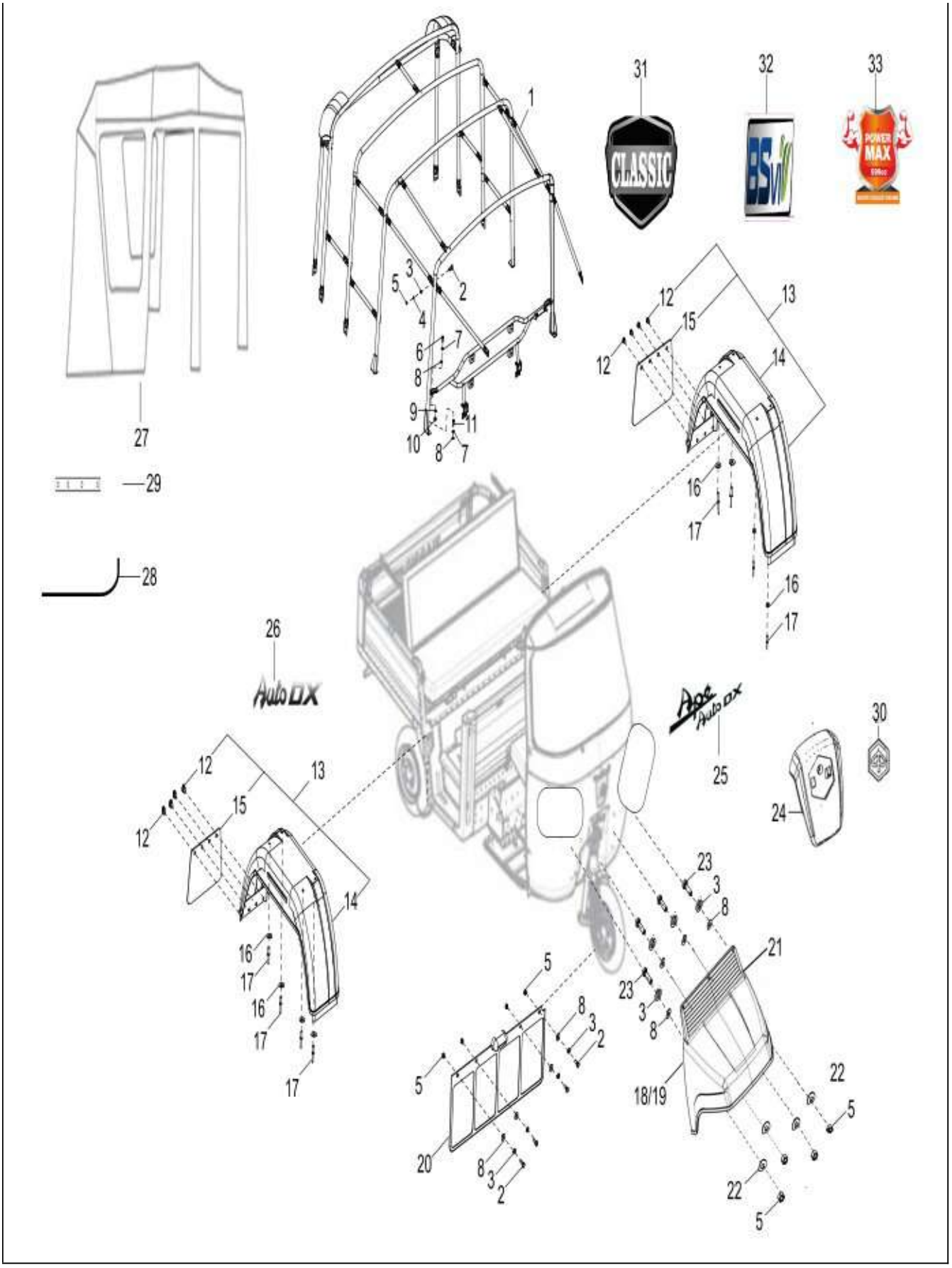
1
2
3
4
5
6
7
8
9
10
11
12
13
14
15
16
17
18/19
20
21
22
23
24
25
26
27
28
29
30
31
32
33
CLASSIC
POWER MAX
Auto DX
Ape Auto DX

83

Print Date: 05-Oct-2022

PLATE-34

Hood frame MUDGUARD

Fig. No.	Part No.	Description	Qty	Remarks
1	6B001672	KIT HOOD STRUCTURE	1	For D+3
2	31088	HEX HD SCREW M6 X 16 CL 8.8 (811061623)	36	
3	16406	SPRING WASHER M6 OD12	44	
4	3056	PLAIN WASHER M6 OD12	44	
5	20106	HEX NUT M6	44	
6	31116	HEX HD. SCREW M8X16	4	
7	16408	SPRING WASHER M8	8	
8	13880	METALIC PLAIN WASHER	4	
9	3058	PLAIN WASHER 15X8.4X1.5	4	
10	20108	HEX NUT M8	4	
11	568096	SCREW HEAD CAP SCREW M8X20 (819082037)	4	
12	142425	BUTTON	4	
13	NS	NOT SERVICEABLE	2	
14	B042612	REAR MUDGUARD RH/LH	2	
15	116103	MUD FLAP FRONT	2	
16	16603	PLAIN WASHER (METALLIC)	8	
17	604603	RIVET	8	
18	568702	GASKET-FRT MUDGUARD TOP	1	
19	568703	GASKET FOR FRONT MUDGUARD	1	
20	116103	MUD FLAP FRONT	1	
21	B042611	FRONT MUD GUARD APE CLASSIC NEW	1	
22	78307	BENT SPRING WASHER M6	4	
23	31089	HEX HEAD SCREW M6X18 CL 8.8	4	
24	B076001	LOGO SUPPORT_CITY UPGRADE	1	
25	B078878	STICKER DECAL FR. DOME (APE AUTO DX)	1	
26	6B002637	AUTO DX STICKER (SIDE PANEL)	2	
27	B075220	SOFT TOP ASSLY BLK 501 REG VA/VE	1	for Ape Auto Dx (D+3)
27	B075269	SOFT TOP YELLOW	1	for Ape Auto Dx (D+3)
27	6B001789	SOFT TOP ASSLY YELLOW-NON FR	1	Under Development
28	643752	LATERAL PROFILE FOR COVER	1	for Ape Auto Dx (D+3)
29	643753	SECTION BAR FOR HOOP NO. 1(VE)	1	
30	B076120	HEXAGONAL EMBLEM	1	
31	6B003909	STICKER(CLASSIC)	1	
32	6B001978	BS6 LOGO	1	
33	6B002166	POWER MAX STICKER - PASSENGER	1	

84

Print Date: 05-Oct-2022

PLATE-35
TOOLS AND WHEELS

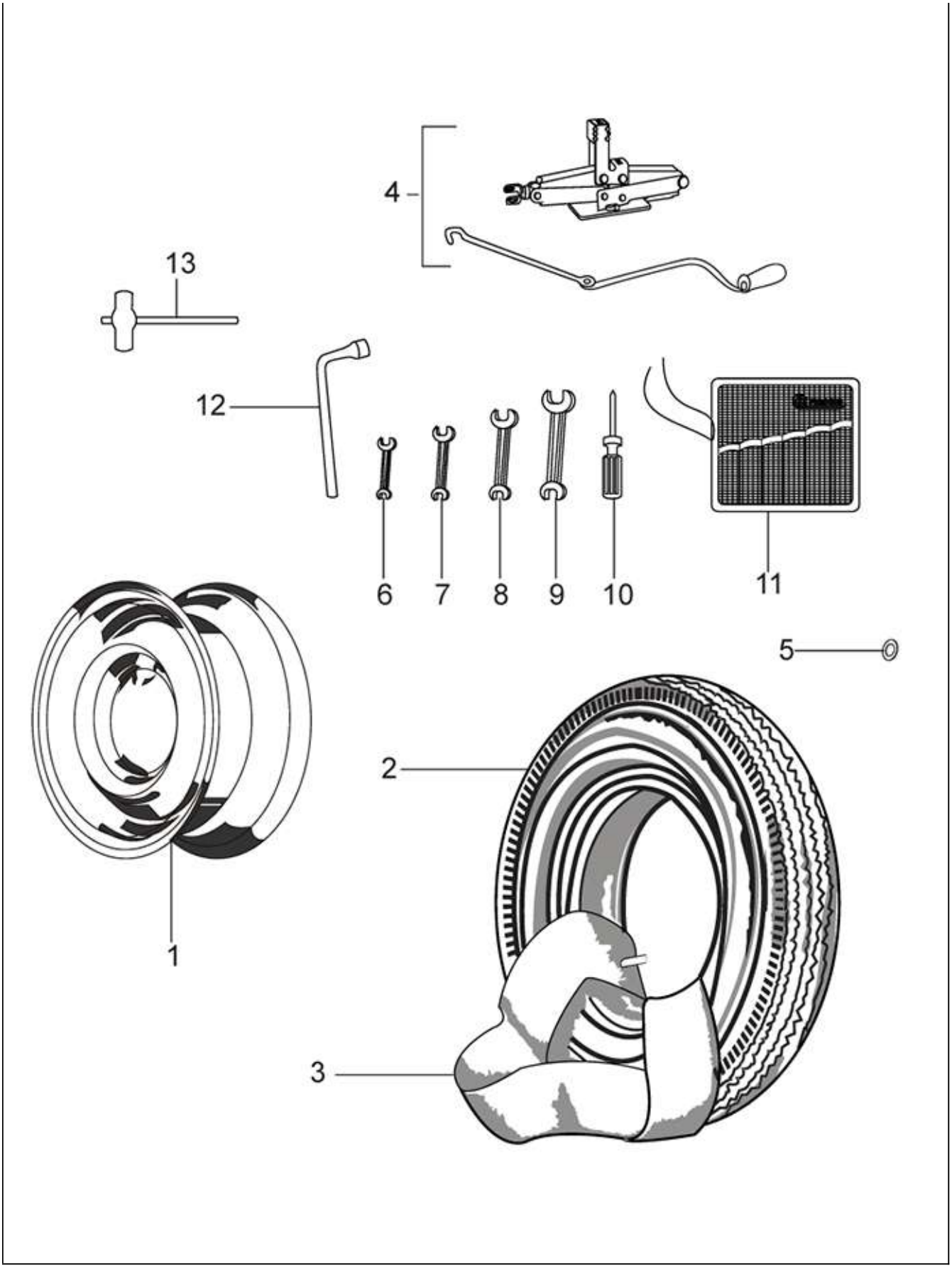
4
13
12
6
7
8
9
10
11
5
2
1
3

85

Print Date: 05-Oct-2022

PLATE-35
TOOLS AND WHEELS

Fig. No.	Part No.	Description	Qty	Remarks
1	644973R	WHEEL RIM ASSY.	1	
2	587971	TYRE 4.50 X 10 8 PR	1	
3	151924	INNER TUBE TYRE 4.5 X 10 INCH	4	
4	B001954R	JACK ASSEMBLY COMPONENT	1	
5	6018	PL. WASHER	2	
6	567454	DOUBLE END SPANNER7/8	1	
7	567455	DE SPANNER 10X13 IS:2018(ZN PLATING)	1	
8	567456	DOUBLE END SPANNER 12/14	1	
9	567457	DE SPANNER 17/19	1	
10	567458	SCREW DRIVER (-)&(+) 80	1	
11	604707	TOOL BAG	1	
12	567459	L TYPE WHEEL SPANNER (A/F19)	1	

86

Print Date: 05-Oct-2022

PLATE-36
REAR SUSPENSION

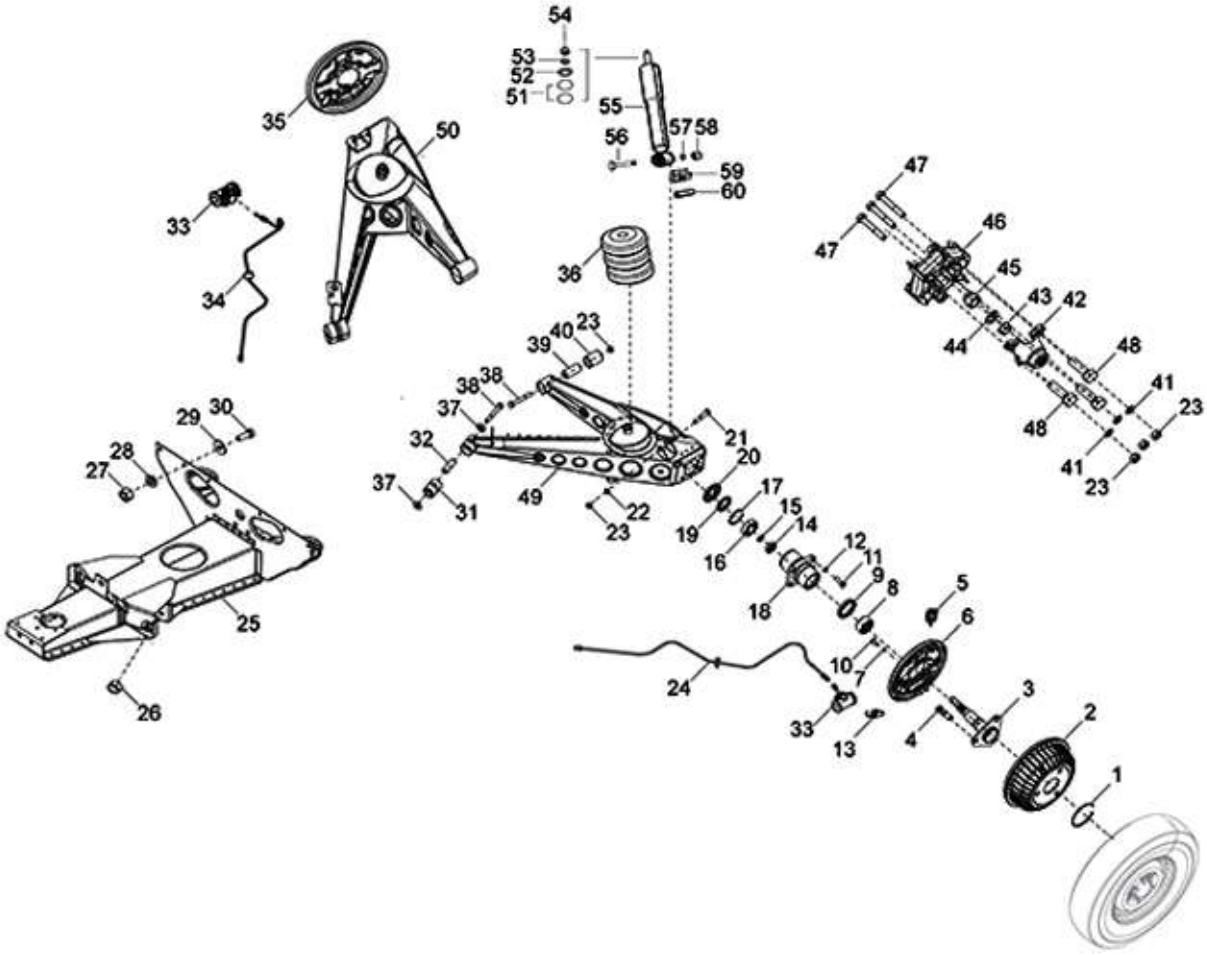
54
53
52
51
55
56
57
58
59
60
35
50
33
34
36
47
47
46
45
43
42
44
48
41
23
48
41
23
39
40
23
38
38
37
32
37
31
49
22
23
21
20
17
15
14
19
16
12
11
9
8
18
5
6
10
7
24
33
13
4
3
2
1
29
30
28
27
25
26

87

Print Date: 05-Oct-2022

PLATE-36
REAR SUSPENSION

Fig. No.	Part No.	Description	Qty	Remarks
1	107870	ELASTIC RING	2	
2	152580	BRAKE DRUM APE - 501	2	
3	6C000060	WHEEL AXLE	2	
4	652520	BOLT FOR AXLE M12 X 40 (VE WHEEL RIM)	6	
5	602497	JAWS STOP SPRINGS	2	
6	6C000279	JAW-SUPPORT DISK FOR RIGHT WHEEL WITH AS	1	
7	12536	SPRING WASHER	4	
8	661282	NEEDLE ROLLER BEARING	2	
9	20359	SEAL RING	1	
10	63440	BOLT M6X12	4	
11	31159	HEX HD SCREW M10 X 35 CC 8.8	4	
12	16410	SPRING WASHER	4	
13	116088	SPRING SUPPORTING JAWS	2	
14	661267	RING	2	
15	137026	SPRING RING	2	
16	243303R	DEEP GROVE BALL BRG-RR WH AXLE	1	
17	6650	CIRCLIP DIA 50 (INT)	2	
18	6C000662	REAR WHEEL HUB	2	
19	196302	OIL SEAL	2	
20	109892	PROTECTION CUP RR HUB	2	
21	267068	HEX HEAD BOLT M10 X 60 CC 10.9	4	
22	286328	PLAIN WASHER 20X10.2X2	4	
23	231370	SELF BREAKING NUT M10	12	
24	644813	BRAKE PUMP TUBE OF LEFT REAR WHEEL	1	
25	6C000382	FRAME ASSLY SUS.& ENGINE SUPPORT	1	for Ape Auto Dx (D+3)
26	231370	SELF BREAKING NUT M10	2	
27	15335	HEX HD NUT M8	6	
28	16408	SPRING WASHER M8	6	
29	116831	PLAIN METALLIC WASHER (826000828)	6	
30	31119	HEX HD SCREW M8 X 25	6	
31	226596	BUSH FRONT RING FOR ELASTIC SUPPORT	2	
32	267065	SPACER FRONT	2	
33	632148	WHEEL CYLINDER ASSY. FRONT DIA. (25.4 MM)	2	
34	644812	BRAKE PUMP TUBE OF RIGHT REAR WHEEL	1	
35	6C000279	JAW-SUPPORT DISK FOR RIGHT WHEEL WITH AS	1	

88

Print Date: 05-Oct-2022

PLATE-36
REAR SUSPENSION

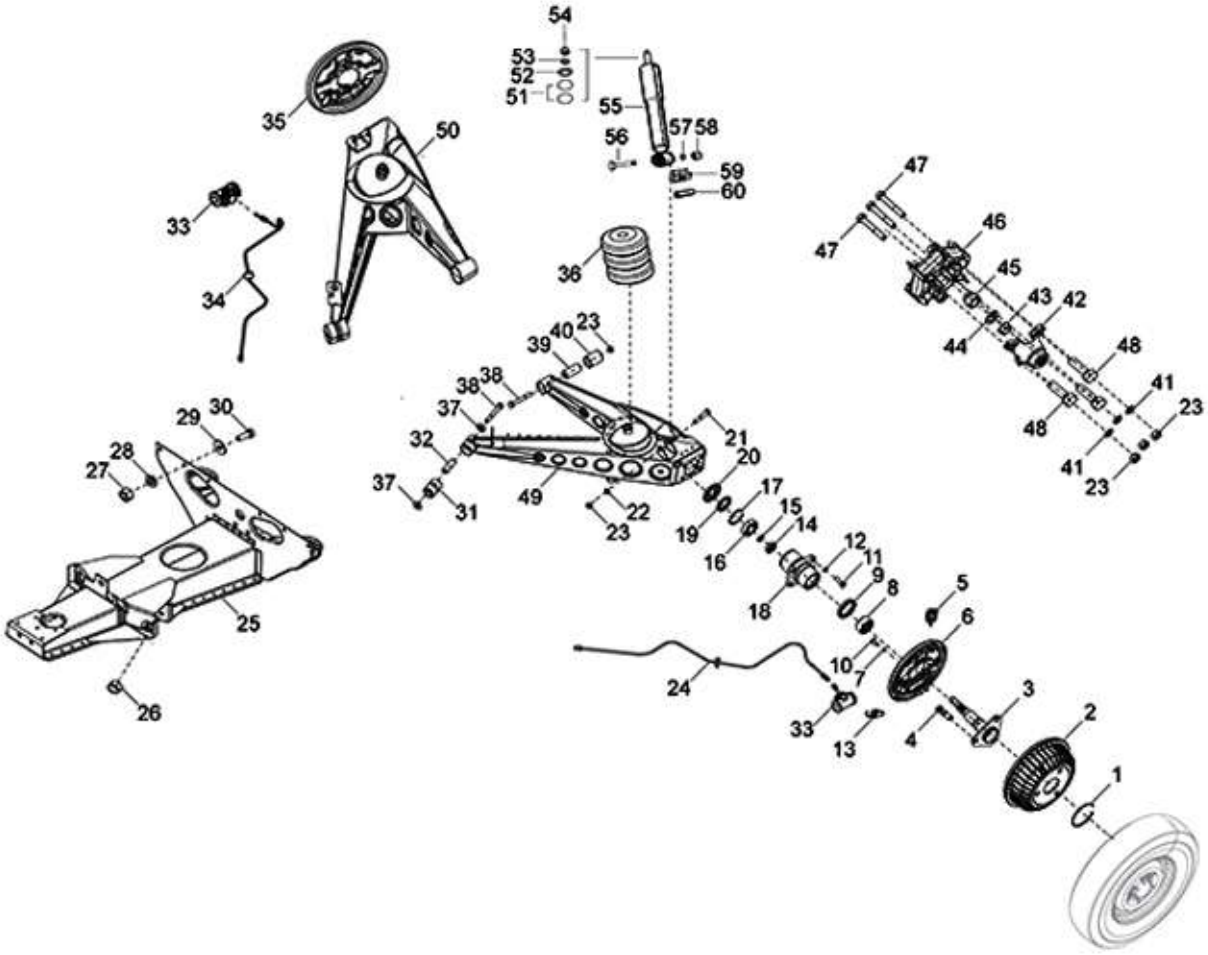
54
53
52
51
55
56
57
58
59
60
35
50
33
34
36
47
47
46
45
43
42
44
48
41
23
48
41
23
39
40
23
38
38
37
32
37
31
49
22
23
21
20
17
15
14
19
16
12
11
9
8
18
5
6
10
7
24
33
13
4
3
2
1
29
30
28
27
25
26

89

Print Date: 05-Oct-2022

PLATE-36

REAR SUSPENSION

Fig. No.	Part No.	Description	Qty	Remarks
36	568289	RUBBER SHOCK ABSORBER	2	for Ape Auto Dx (D+3)
37	661266	SHOULDER WASHER	4	
38	643741	HEX HDD BOLT M10 X 80 CL 12.9	4	
39	226662	RING FOR ELASTIC SUPPORT	2	
40	226661	INTERNAL BUSH	2	
41	237246	SHIM WASHER 20X10.2X1	6	
42	587617	ELASTIC JOINT CONNECTION HUB (WHL - SIDE)	2	
43	128633	CONE	6	
44	3068	PLAIN WASHER	12	
45	231370	SELF BREAKING NUT M10	12	
46	643576	FLEXIBLE COUPLING	2	
47	15594	HEX HDD BOLT M10 X 35	6	
48	B024373	ALLEN BOLT M10X65 CL 10.9	6	
49	6C000362	ARM ASSLY LH RR SUSP. WITH BUSH-REG	1	for Ape Auto Dx (D+3)
50	6C000363	ARM ASSLY RH RR SUSP. WITH BUSH-REG	1	for Ape Auto Dx (D+3)
51	74414	RUBBER BUSH/BUFFER FOR COUPLING SHOCK ABSORBE	4	
52	6066	PL WASHER 10.5X38X9	2	
53	16410	SPRING WASHER	2	
54	20110	HEX NUT M10	2	
55	136451R	SHOCK ABSORBER REAR	2	
56	267068	HEX HEAD BOLT M10 X 60 CC 10.9	2	
57	286328	PLAIN WASHER 20X10.2X2	2	
58	231370	SELF BREAKING NUT M10	2	
59	157103	BUSH - SHOCK ABSORBER	2	
60	107827	SPACER	1	

90

Print Date: 05-Oct-2022

PLATE-37

STEERING COLUMN AND FRONT SUSPENSION

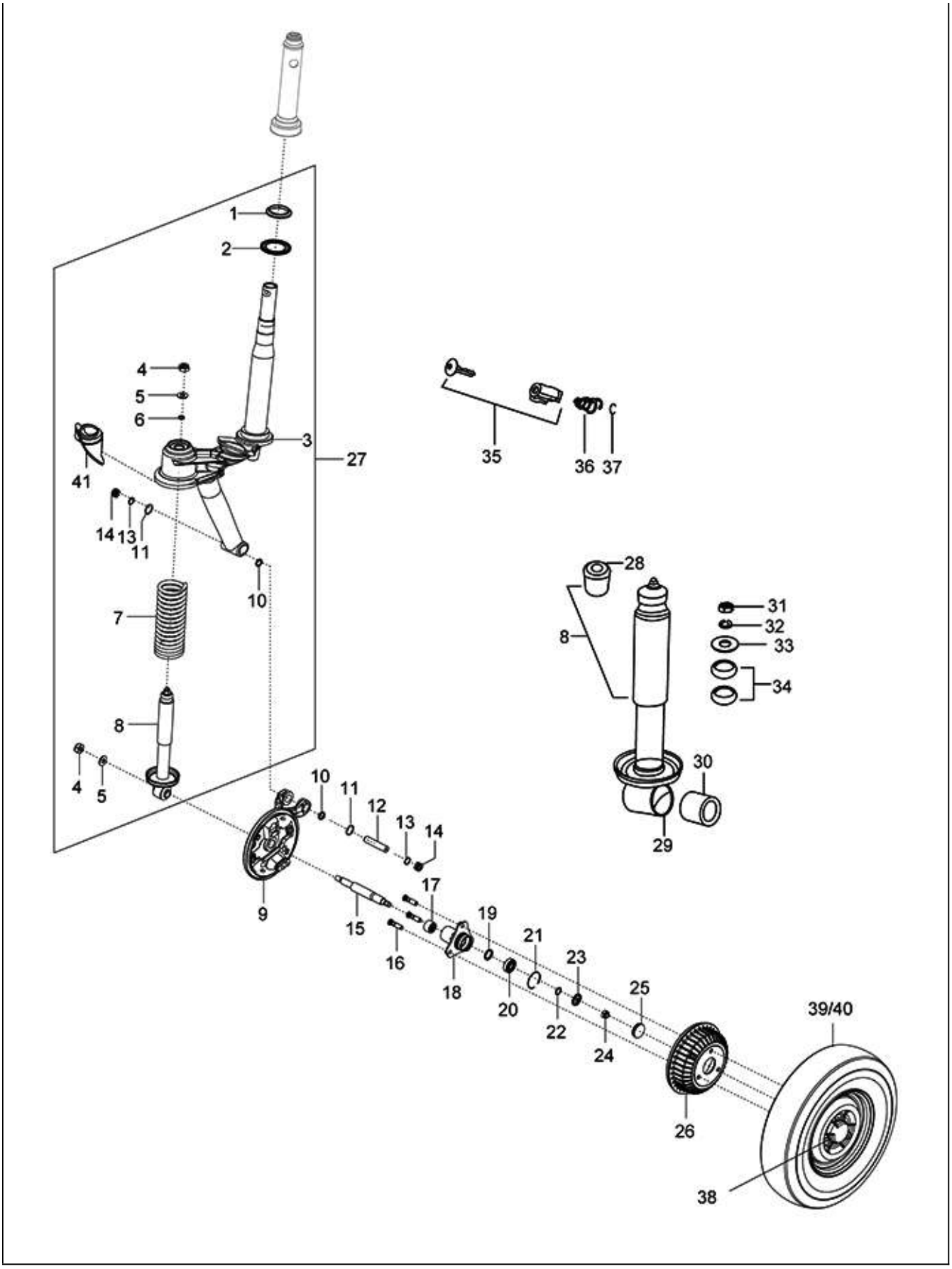
1
2
4
5
6
3
27
41
14
13
11
10
7
8
4
5
35
36
37
28
8
31
32
33
34
30
29
10
11
12
13
14
9
15
17
16
18
19
20
21
22
23
24
25
26
39/40
38

91

Print Date: 05-Oct-2022

PLATE-37

STEERING COLUMN AND FRONT SUSPENSION

Fig. No.	Part No.	Description	Qty	Remarks
1	567993	BEARING RACE LOWER BOTTOM	1	
2	109066	WASHER WITH PROTECTION FOR BEARING	1	
3	B076859	STEERING COLUMN WITH I.P. (501 STD)	1	
3	6C000475SP	STEERING COLUMN WITH BKT WITH CARRIER _SPD	1	STEERING COLUMN WITH BKT Wheel CARRIER
4	568095	NYLOCK NUT	2	
5	87067	PLAIN WASHER 30.5X14.3X2	2	
6	16410	SPRING WASHER	1	
7	569255	FRONT SUSPENSION SPRING	1	
8	569246R	FRONT SHOCK ABSORBER	1	
9	6C000275	BRACKET WHEEL CARRIER WITH PI	1	
10	8771	OIL SEAL (18-24-4)	2	
11	6733	O RING	2	
12	137235	STEERING PIN	1	
13	150579	RING FOR HOLDING TYPE J F101 17A	2	
14	107718	ROLLER BUSH	2	
15	643772R	FRONT WHEEL AXLE	1	
16	652520	BOLT FOR AXLE M12 X 40 (VE WHEEL RIM)	3	
17	125289	NEEDLE BEARING, CRANKASE, FRONT WHEEL	1	
18	652521	FR. WHEEL HUB ASSY.	1	
19	136434	OIL SEAL	1	
20	30209R	BALL BEARING FRONT WHEEL HUB	1	
21	107870	ELASTIC RING	1	
22	567473	CIRCLIP DIA. 42 INT. (841004203)	1	
23	180431	COIN WASHER	1	
24	74521	NUT M14 X 1.5	1	
25	107871	CAP	1	
26	152580	BRAKE DRUM APE - 501	1	
27	6C000474SP	FRONT SUSPENSION ASSLY XTRA DX COMPLETE_SPD	1	Xtra Dx (PU) complete assly
28	75708	SILENT BLOCK	1	
29	107732	BUSH FOR SILENT BLOCK	1	
30	566545	RUBBER BUSH (FRT SHOCK ABSORBER) - MODIFIED	1	
31	20110	HEX NUT M10	1	
32	16410	SPRING WASHER	1	
33	6066	PL WASHER 10.5X38X9	1	
34	74414	RUBBER BUSH/BUFFER FOR COUPLING SHOCK ABSORBE	1	

92

Print Date: 05-Oct-2022

PLATE-37

STEERING COLUMN AND FRONT SUSPENSION

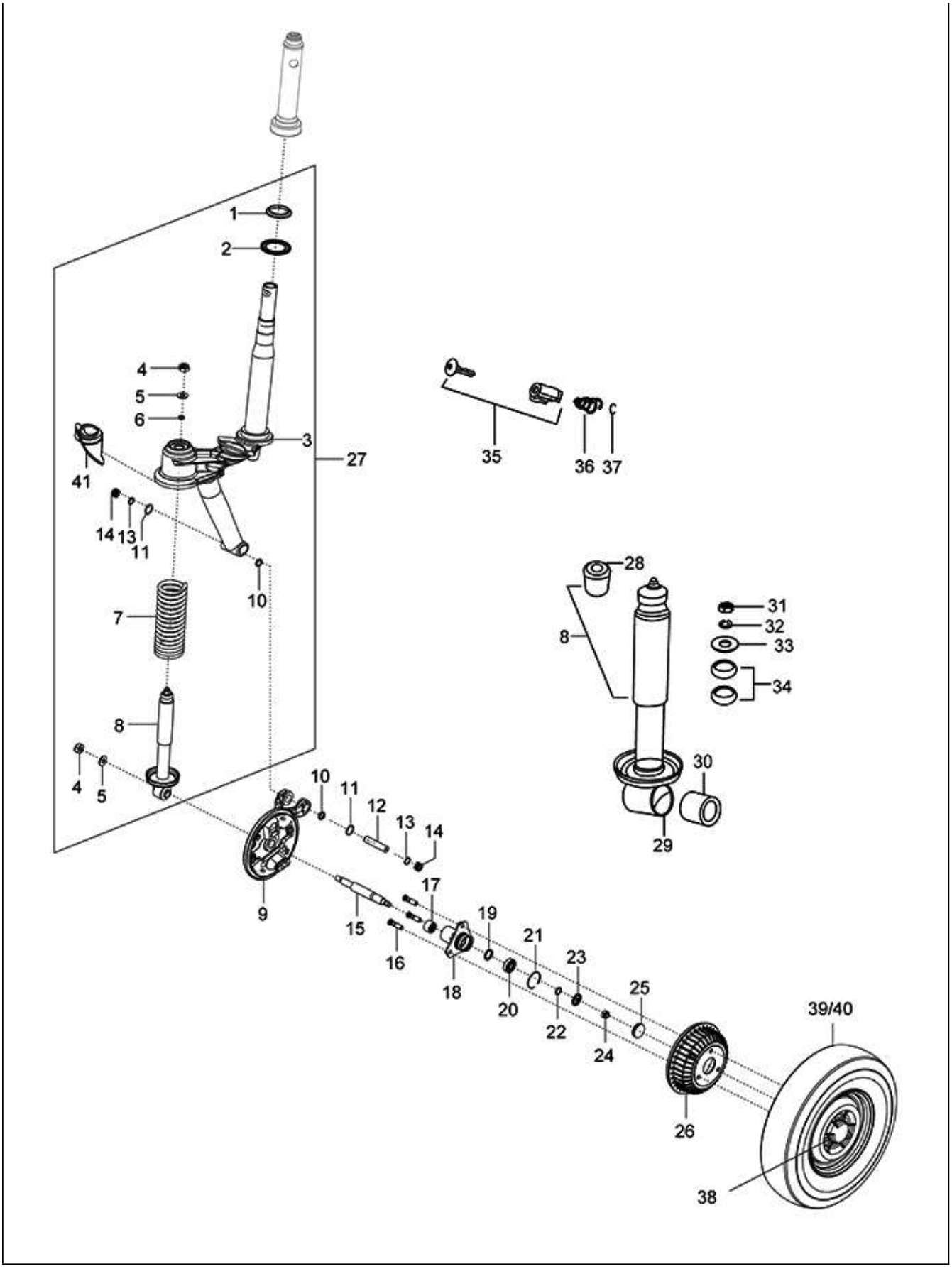
1
2
4
5
6
3
27
41
14
13
11
10
7
8
4
5
35
36
37
28
8
31
32
33
34
30
29
10
11
12
13
14
9
15
17
16
18
19
20
21
22
23
24
25
26
39/40
38

93

Print Date: 05-Oct-2022

PLATE-37

STEERING COLUMN AND FRONT SUSPENSION

Fig. No.	Part No.	Description	Qty	Remarks
35	B001561	STG LOCK ASSLY WITH KEY	1	
36	569150	SPRING; STEERING LOCK (MODIFIED)	1	
37	661231	CIRCLIP STEERING LOCK DIA 16 (INT)	1	
38	644973R	WHEEL RIM ASSY.	3	(Qty. front & Rear)
39	587971	TYRE 4.50 X 10 8 PR	3	(Qty. front & Rear)
40	151924	INNER TUBE TYRE 4.5 X 10 INCH	3	(Qty. front & Rear)
41	109265	SPLASH GUARD DUST COVER	1	
42	KIT96033R	MODIFIED BALL KIT FOR 3WH (WHITE)	1	N.I
43	KIT95021R	STEERING CONE SET (UPPER)	1	N.I
44	KIT95022R	STEERING CONE SET (LOWER)	1	N.I
45	KIT96016R	KIT OF STEERING CONE & BALL KIT	1	N.I
46	KIT940003R	STEERING PIN KIT WITH O RING	1	N.I

94

Print Date: 05-Oct-2022

PLATE-38
HANDLE BAR AND CONTROL

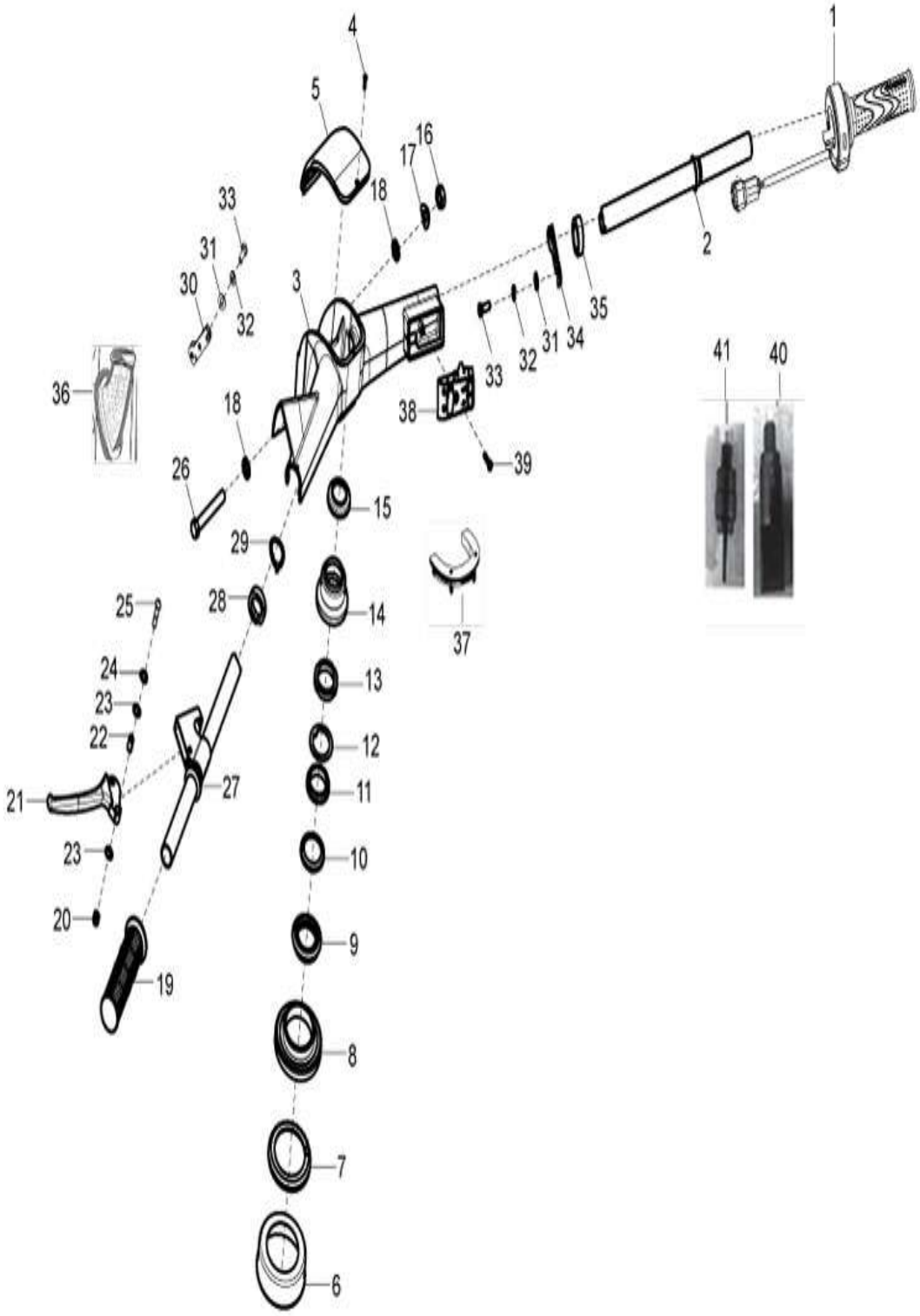
1
2
3
4
5
6
7
8
9
10
11
12
13
14
15
16
17
18
19
20
21
22
23
24
25
26
27
28
29
30
31
32
33
34
35
36
37
38
39
40
41

95

Print Date: 05-Oct-2022

PLATE-38
HANDLE BAR AND CONTROL

Fig. No.	Part No.	Description	Qty	Remarks
1	B073849	HANDLE BAR GRIP - RH	1	
2	587902	ACCELERATOR TUBE ASSY.	1	
3	B075687ED	HANDLE BAR BODY-ED	1	
4	632158	CSK HEAD SCREW	1	
5	B041600	HANDLE BAR COVER	1	
6	109064	DUST COVER	1	
7	6C000191	LOWER BALL CAGE (VE)	1	
8	567992	BEARING RACE LOWER TOP	1	
9	567990	BEARING RACE UPPER BOTTOM	1	
10	6C000190	UPPER BALL CAGE (VE)	1	
11	567991	BEARING RACE UPPER TOP	1	
12	108873	STOP WASHER FOR HOLDING	1	
13	108874	SECURING RING NUT	1	
14	604758	PROTECTION	1	
15	604759	RUBBER CAP STEERING COLUMN (N.I.)	1	
16	20110	HEX NUT M10	1	
17	B041653	SPRING WASHER	1	
18	16626	PLAIN WASHER (18X10.5X2)	2	
19	B073848	HANDLE BAR GRIP - LH	1	
20	12138	NYLOCK NUT M6	1	
21	6A001637	LEVER, CLUTCH CONTROL	1	
22	125181	SPACER	1	
23	16620	PLAIN WASHER	2	
24	16319	BENT SPRING WASHER	1	
25	31089	HEX HEAD SCREW M6X18 CL 8.8	1	
26	30077	HEX HEAD SCREW	1	
27	127451	TUBE WITH TERMINAL S/A	1	
28	109404	WASHER OF RABBET(41737)	1	
29	60565	SPRING WASHER	1	
30	109775	GEAR CONTROL LEVER S/A	1	
31	3055	PLAIN WASHER M5	1	
32	16406	SPRING WASHER M6 OD12	1	
33	31089	HEX HEAD SCREW M6X18 CL 8.8	1	
34	109635	THROTTLE CONTROL LEVER WITH IP	1	
35	587904	SINTERED WASHER HANDLE BAR (41769)	1	

96

Print Date: 05-Oct-2022

PLATE-38
HANDLE BAR AND CONTROL

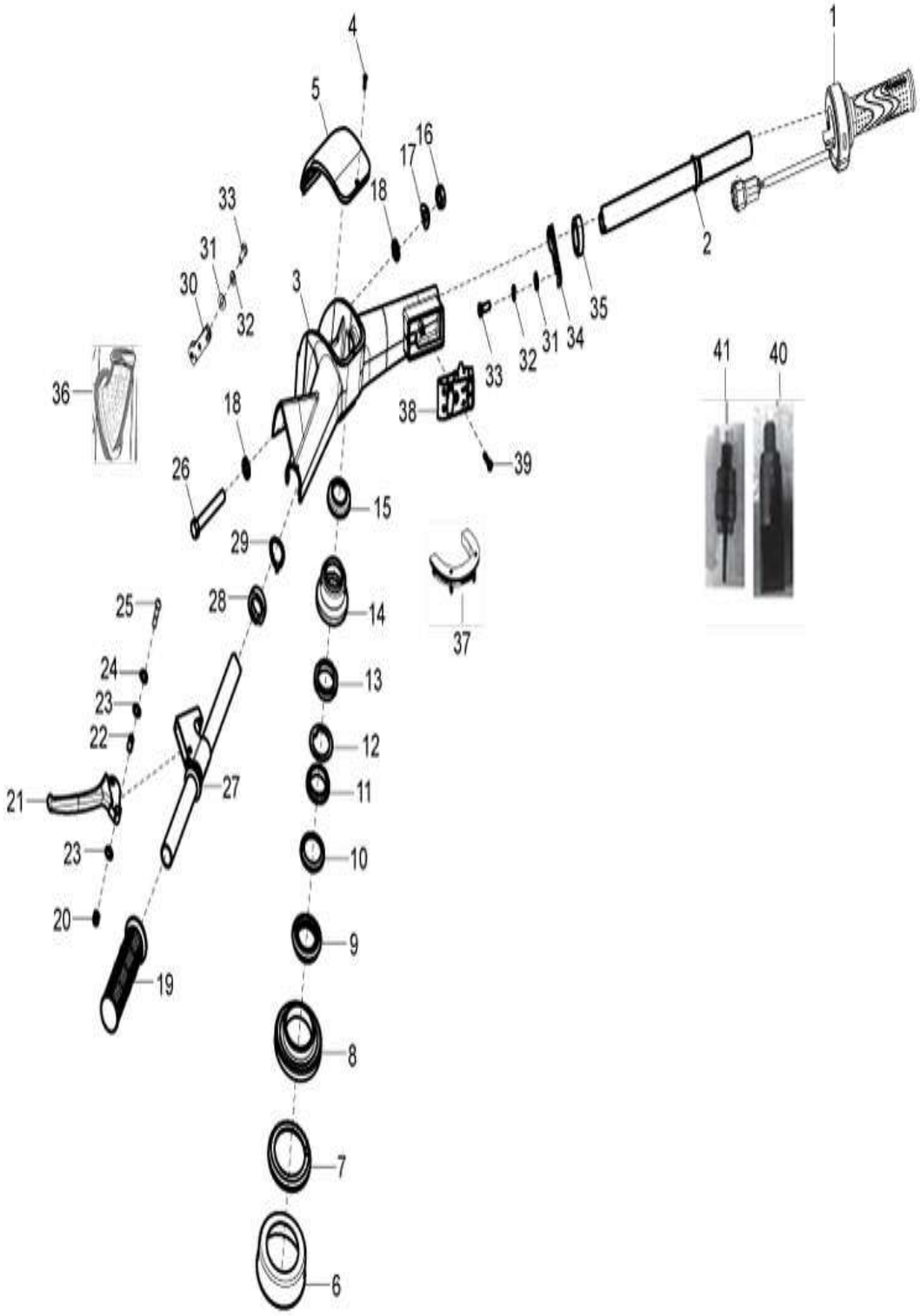
1
2
3
4
5
6
7
8
9
10
11
12
13
14
15
16
17
18
19
20
21
22
23
24
25
26
27
28
29
30
31
32
33
34
35
36
37
38
39
40
41

97

Print Date: 05-Oct-2022

PLATE-38

HANDLE BAR AND CONTROL

Fig. No.	Part No.	Description	Qty	Remarks
36	109227	PROTECTION GROMMET	1	
37	126902	PROTECTION COLLAR CABLE	1	
38	B073366R	HANDLE BAR SWITCH ASSLY-NEW	1	
39	15640	SCREW SECURING SWITCH	1	
40	642032	PUSH BUTTON-CLUTCH	1	
41	640762	PUSH BUTTON REVERSE	1	
42	KIT96033R	MODIFIED BALL KIT FOR 3WH (WHITE)	1	NI
42	KIT96033R	MODIFIED BALL KIT FOR 3WH (WHITE)	1	NI
43	KIT95021R	STEERING CONE SET (UPPER)	1	NI
44	KIT95022R	STEERING CONE SET (LOWER)	1	NI
45	KIT96016R	KIT OF STEERING CONE & BALL KIT	1	NI
46	KIT940003R	STEERING PIN KIT WITH O RING	1	NI

98

Print Date: 05-Oct-2022

PLATE-39

BRAKE - TANDEM MASTER CYLINDER, BRAKE PIPE AND HAND BRAKES

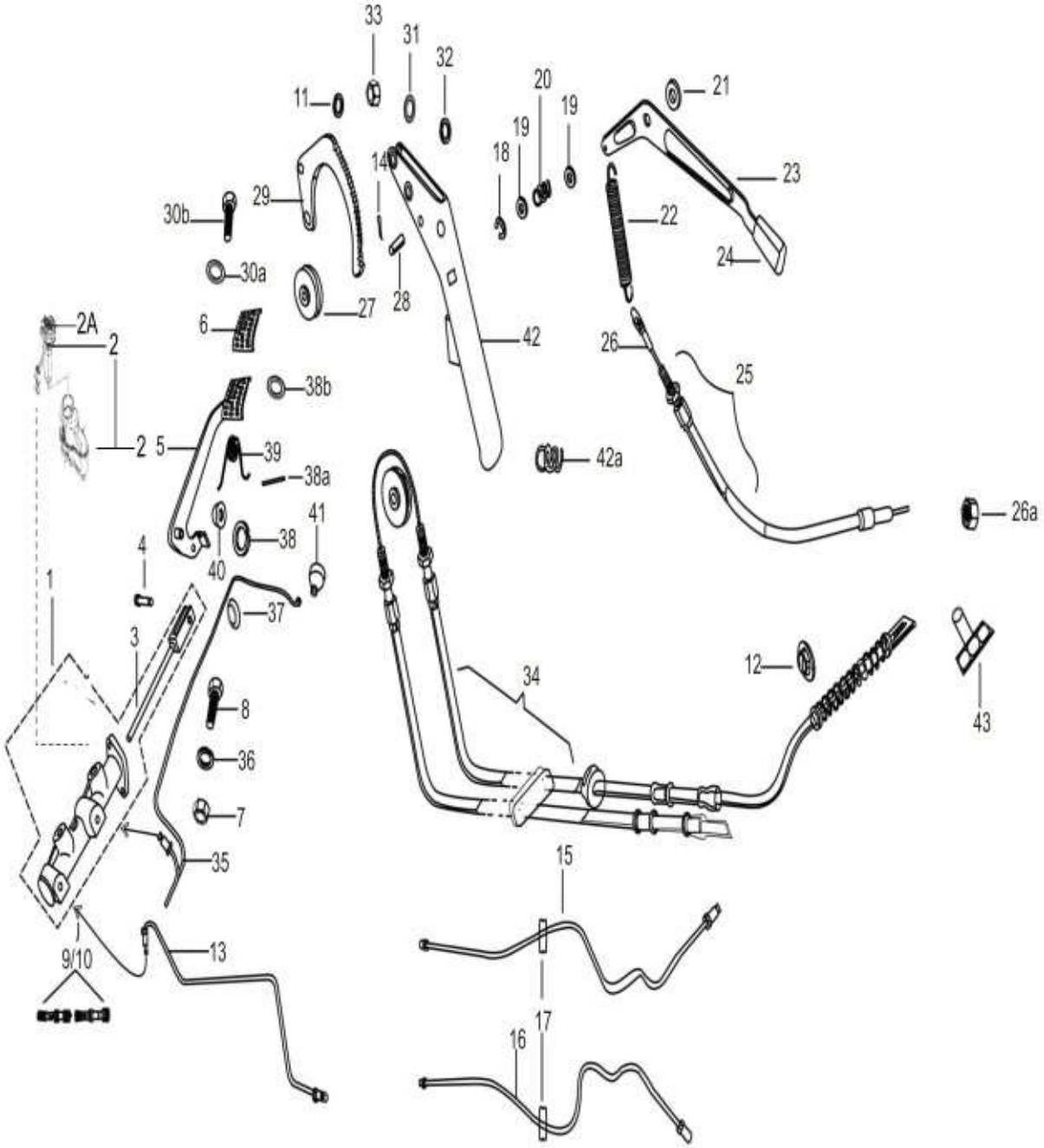
33
31
32
11
20
21
19
19
18
14
23
29
30b
22
24
30a
27
28
2A
2
6
42
26
25
38b
2
5
39
42a
38a
26a
41
38
4
40
1
37
3
12
34
43
8
36
7
35
15
9/10
13
17
16

99

Print Date: 05-Oct-2022

PLATE-39

BRAKE - TANDEM MASTER CYLINDER, BRAKE PIPE AND HAND BRAKES

Fig. No.	Part No.	Description	Qty	Remarks
1	6C000443R	TMC ASSLY WITH INTEGRATED RESERVOIR	1	
2	6C000468	RESERVOIR KIT TMC	1	Under Development
2A	6C000469	RESERVOIR CAP	1	NI
3	587702	PUSH ROD	1	
5	6C000124	BRAKE PEDAL WITH FOOT REST ASSLY	1	
6	567461	RUBBER PROTECTION FOR PEDAL	1	
7	20108	HEX NUT M8	2	
8	31122	HEX HD. SCREW M8X30 CL 8.8	2	
8	16408	SPRING WASHER M8	2	
9	B077155	MAJOR KIT TMC	1	
10	B077156	MINOR KIT TMC	1	
11	16408	SPRING WASHER M8	1	
12	604502	CUP RETAINING SPRING (41733)	2	
13	B075852	BRAKE TUBE FOR REAR WHEEL	1	for Dx (D+3)
14	12761	SPLIT PIN	1	
15	644813	BRAKE PUMP TUBE OF LEFT REAR WHEEL	1	for Dx (D+3)
16	644812	BRAKE PUMP TUBE OF RIGHT REAR WHEEL	1	for Dx (D+3)
18	5969	CIRCLIP DIA 9 E TYPE	1	
19	6173	METALLIC PLAIN WASHER (808001026)	1	
20	108785	SPRING	1	
21	B042317	SPACER-RC LEVER	1	
22	567690	REVERSE GEAR COUPLING SPRING	1	
23	B076455	LEVER S/ASSLY. REVERSE	1	
24	604717	KNOB FOR R.C.	1	
25	6A000581	ASSY REVERSE CABLE	1	for Dx (D+3)
26	6A000936	CABLE REVERSE GEAR WITH TERMINALS	1	for Dx (D+3)
26A	20105	PLAIN NUT M5	2	
27	567898	PULLEY FOR HAND BRAKE	1	
28	567899	CLEVIS PIN	1	
29	B042794	RATCHET , HAND BRAKE CONTROL	1	
30A	140728	PLAIN WASHER 8.5 X 24 X 3	6	
30B	31118	SCREW M8X20	1	
31	6173	METALLIC PLAIN WASHER (808001026)	1	
31	13812	METALLIC PLAIN WASHER	1	
32	6411	EXT CIRCLIP DIA 11	1	

100

Print Date: 05-Oct-2022

PLATE-39

BRAKE - TANDEM MASTER CYLINDER, BRAKE PIPE AND HAND BRAKES

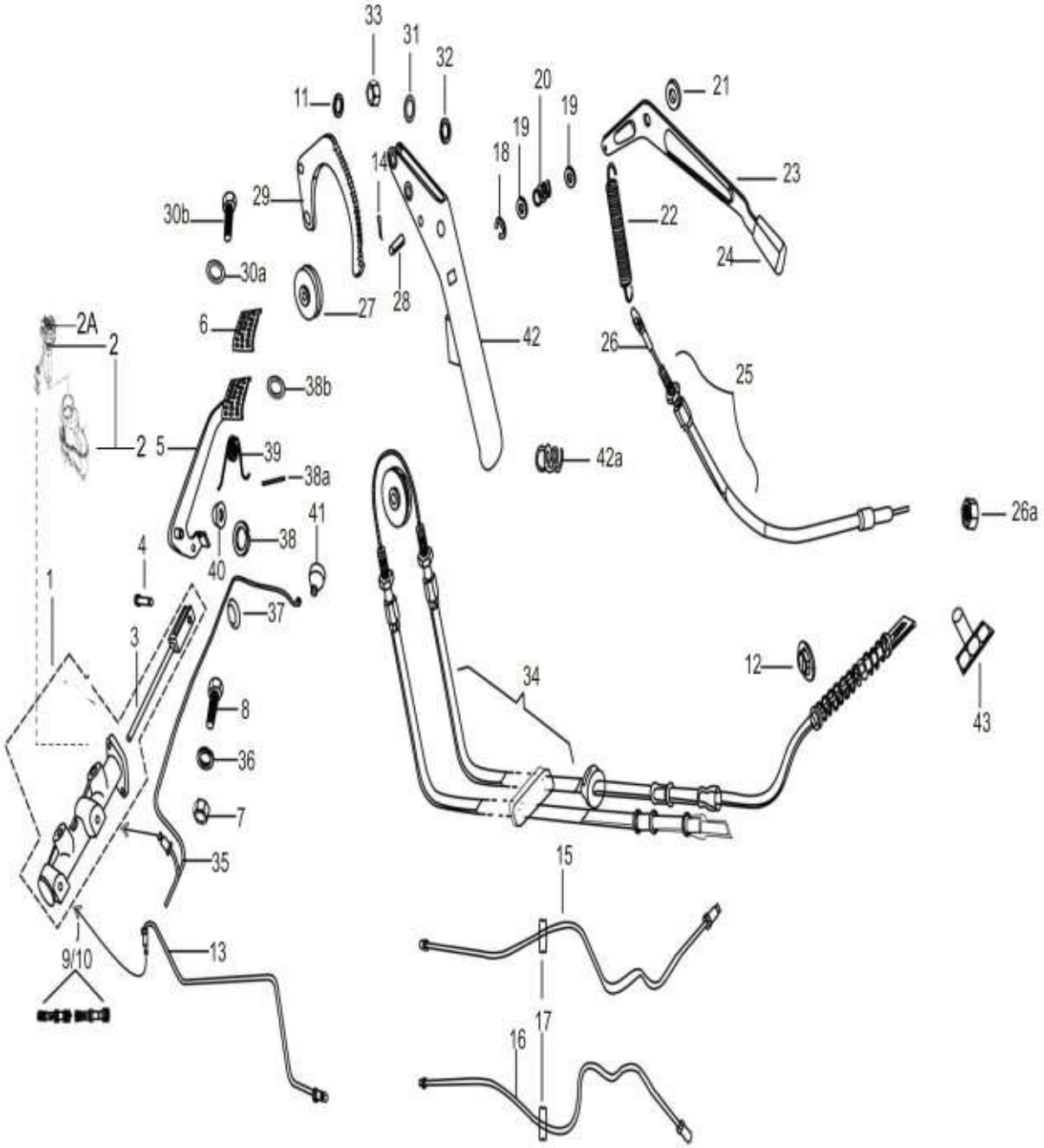
33
31
32
11
20
21
19
19
18
14
23
29
30b
22
24
30a
27
28
2A
2
6
42
26
25
38b
2
5
39
42a
38a
26a
41
38
4
40
1
37
3
12
34
43
8
36
7
35
15
9/10
13
17
16

101

Print Date: 05-Oct-2022

PLATE-39

BRAKE - TANDEM MASTER CYLINDER, BRAKE PIPE AND HAND BRAKES

Fig. No.	Part No.	Description	Qty	Remarks
33	20108	HEX NUT M8	1	
34	567719	CABLE,HAND BRAKE CONTROL ASSLY	1	for Dx (D+3)
35	568161	TUBE BETWEEN TMC & FRT WHEEL	1	
36	16408	SPRING WASHER M8	2	
37	6414	CIRCLIP DIA. 14 (EXT)	1	
38	843000809	CIRCLIP DIA.8(EXT) TYPE C	1	
38A	567920	SPLIT PIN	1	
38B	3058	PLAIN WASHER 15X8.4X1.5	1	
39	587928	FOOT BRAKE PEDAL SPRING	1	
40	229524	WASHER 21X14.3X2	1	
41	138237	CAP	1	
42	B075697	HAND BRAKE CONTROL ASSLY	1	its complete assly.
43	119278	TERMINAL	1	

102

Print Date: 05-Oct-2022

PLATE-40
Control Cables

PLATE40

IMAGE IN PROGRESS

10

103

Print Date: 05-Oct-2022

PLATE-40

Control Cables

Fig. No.	Part No.	Description	Qty	Remarks
1	B073470R	ACCELERATOR CABLE WITH JONT (NEW)	1	Assly
2	B024379	SCREW TERMINAL ASSLY-ENGINE STOP,D.C.	1	
3	645124	SPEEDO CABLE	1	Assly
4	587812	TRANSMISSION CABLE (INNER) FOR ODOMETER	1	innner for Speedo cable
5	6A000581R	ASSY REVERSE CABLE	1	Assly
6	6A000936	CABLE REVERSE GEAR WITH TERMINALS	1	inner
7	6A001046R	CLUTCH CONTROL TRANSMISSION ASSLY.	1	
8	B076329	CABLE, GEAR CONTROL ASSLY (BLACK)	1	
9	587803	WIRE, GEAR CONTROL WITH TERMINAL	1	Inner
10	B076330	CABLE,GEAR CONTROL ASSLY NO.2(WHITE)	1	
11	587803	WIRE, GEAR CONTROL WITH TERMINAL	1	Inner
13	118806	PROTECTION BELLOW	1	
14	15478	GROMMET4	1	
15	197071	ADJUSTER SCREW M6	1	
16	604560	SCREW TERMINAL ASSY. - GEAR CONTROL	1	
17	126902	PROTECTION COLLAR CABLE	1	
18	567719	CABLE,HAND BRAKE CONTROL ASSLY	1	Assly
19	604515	ENGINE STOP CONTROL TRANSMISSION ASSLY	1	Assy
20	604509	ENGINE STOP CONTROL CABLE INNER	1	inner
21	B001505	DECOMPRESSION TRANSMISSION ASSLY FOR ST	1	Assly
22	6C001002	TEFLON WAHER FOR M6 SCREW	2	
23	6C000980	ASSEMBLY BRACKET FOR DECOMP.CABLE	1	
24	B076798R	CABLE- OIL PRESSURE SWITCH	1	
25	644839R	EARTHING CABLE	1	
26	644838R	BATTERY CABLE -VE	1	
27	6D001348	BATTERY CABLE HARNESS,POSITIVE	1	

104

Print Date: 05-Oct-2022

PLATE-41

Head lamp & Electrical Device

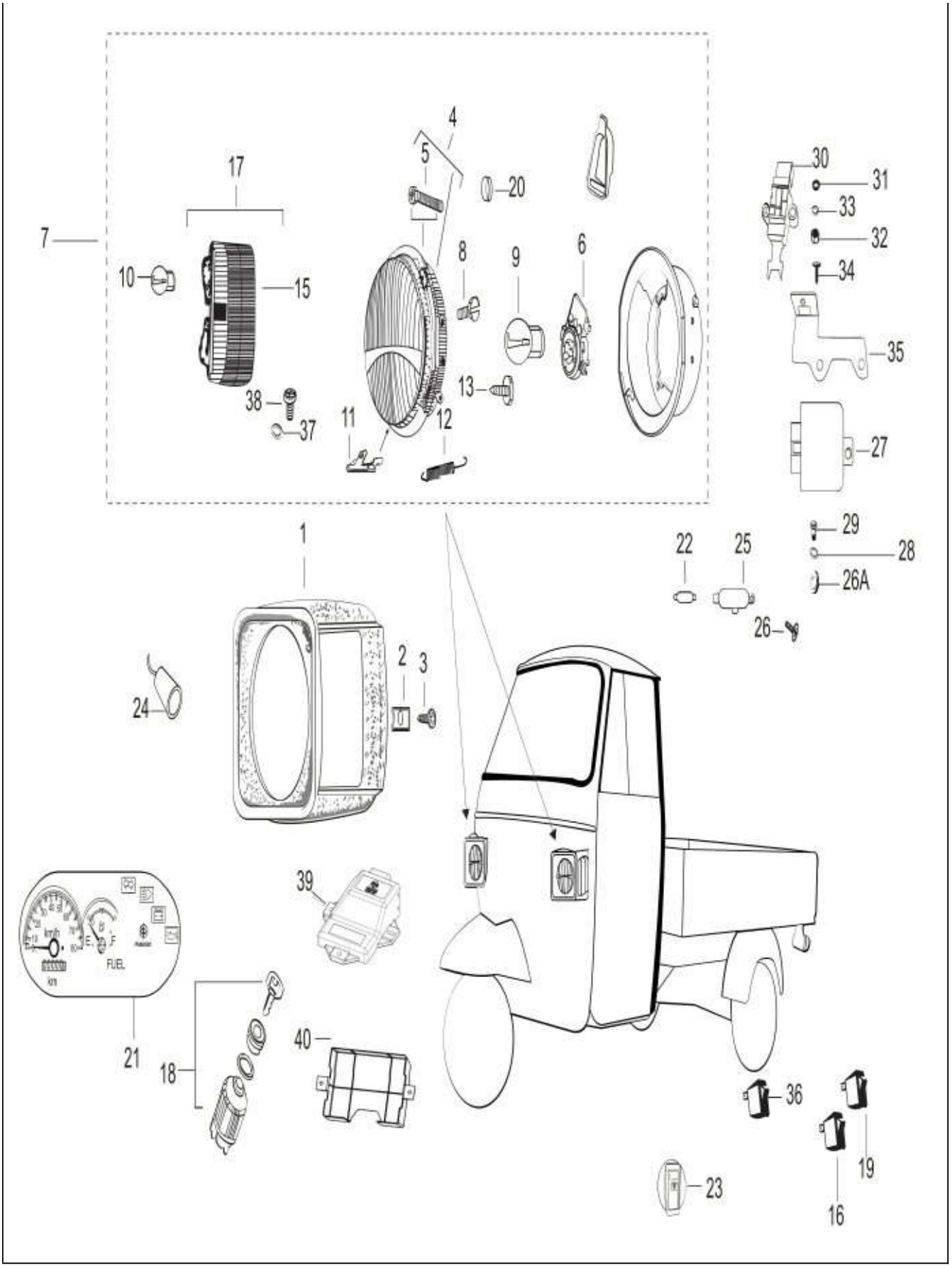
4
5
17
20
30
31
33
32
34
7
10
15
8
9
6
35
38
37
13
11
12
27
1
29
22
25
28
26A
26
2
3
24
39
FUEL
21
18
40
36
19
23
16

105

Print Date: 05-Oct-2022

PLATE-41

Head lamp & Electrical Device

Fig. No.	Part No.	Description	Qty	Remarks
1	B025600	SEAT OF LAMP RIGHT	1	
1	B025601	SEAT OF LAMP LEFT	1	
2	8080	SPRING PLATE	2	
3	15900	HEAD LAMP SECURING SCREW/PAN SELF TAP SCREW	2	
4	925590	HEAD LAMP SEAL BEAM WITH HOLE	4	
5	15641	HEAD LAMP ADJUSTING SCREW	4	
6	114121	BULB HOLDER / HOLDER FRONT LAMP	2	
7	B023816R	ASSY. HEAD LAMP WITH LATERAL LAMP LH	1	
7	B023817R	ASSY. HEAD LAMP WITH LATERAL LAMP RH	1	
8	8432	SCREW	2	
8	15900	HEAD LAMP SECURING SCREW/PAN SELF TAP SCREW	3	
9	219528	BULB 12V 35/35W	2	
10	925581	INDICATOR LIGHT BULB 12V 21W AMBER COLOUR	2	
11	119735	PROTECTION SECURING SPRING/SPR. FOR PROTECTION	4	
12	127179	SPRING FOR HEAD LAMP / SPRING	2	
13	15900	HEAD LAMP SECURING SCREW/PAN SELF TAP SCREW	6	
14	567593	BULB 12V 5W / LAMP 4W	2	
15	925579	H.L. LATERAL LAMP LENSE RH - NEOLITE	1	
15	925580	H.L. LATERAL LAMP LENSE LH - NEOLITE	1	
15	925578	H.L. LATERAL LAMP LENSE LH - LUMAX	1	
15	925577	H.L. LATERAL LAMP LENSE RH - LUMAX	1	
16	587670R	SWITCH 3 POSITION	1	
17	925587	LATERAL LAMP ASSY. RH (NEOLITE)	1	
17	925597	LATERAL LAMP ASSY. LH (NEOLITE)	1	
17	925588	LATERAL LAMP ASSY. RH (LUMAX)	1	
17	925598	LATERAL LAMP ASSY. L H (LUMAX)	1	
18	B002573	KEY IGNITION SWITCH (PAX 200)	1	
18	6G000028	LOCK SET (NEW)_PASS.NUOVO	1	For Push Button Handle Bar Switch
19	587974R	WIPER MOTOR SWITCH/ SWITCH WIPER MOTOR	1	
20	119975	GROMMET	2	
21	661510R	INSTRUMENT CLUSTER WITH SHIFTED SPEEDOMETER - (INDICATION)	1	
22	71633	STOP AND PARKING BULB 12V 10/5 W	1	
23	645153R	MOBILE CHARGER SOCKET	1	
24	645153R	MOBILE CHARGER SOCKET	1	
25	150041R	CABIN LIGHT ASSY. (W/O BULB)	1	

106

Print Date: 05-Oct-2022

PLATE-41

Head lamp & Electrical Device

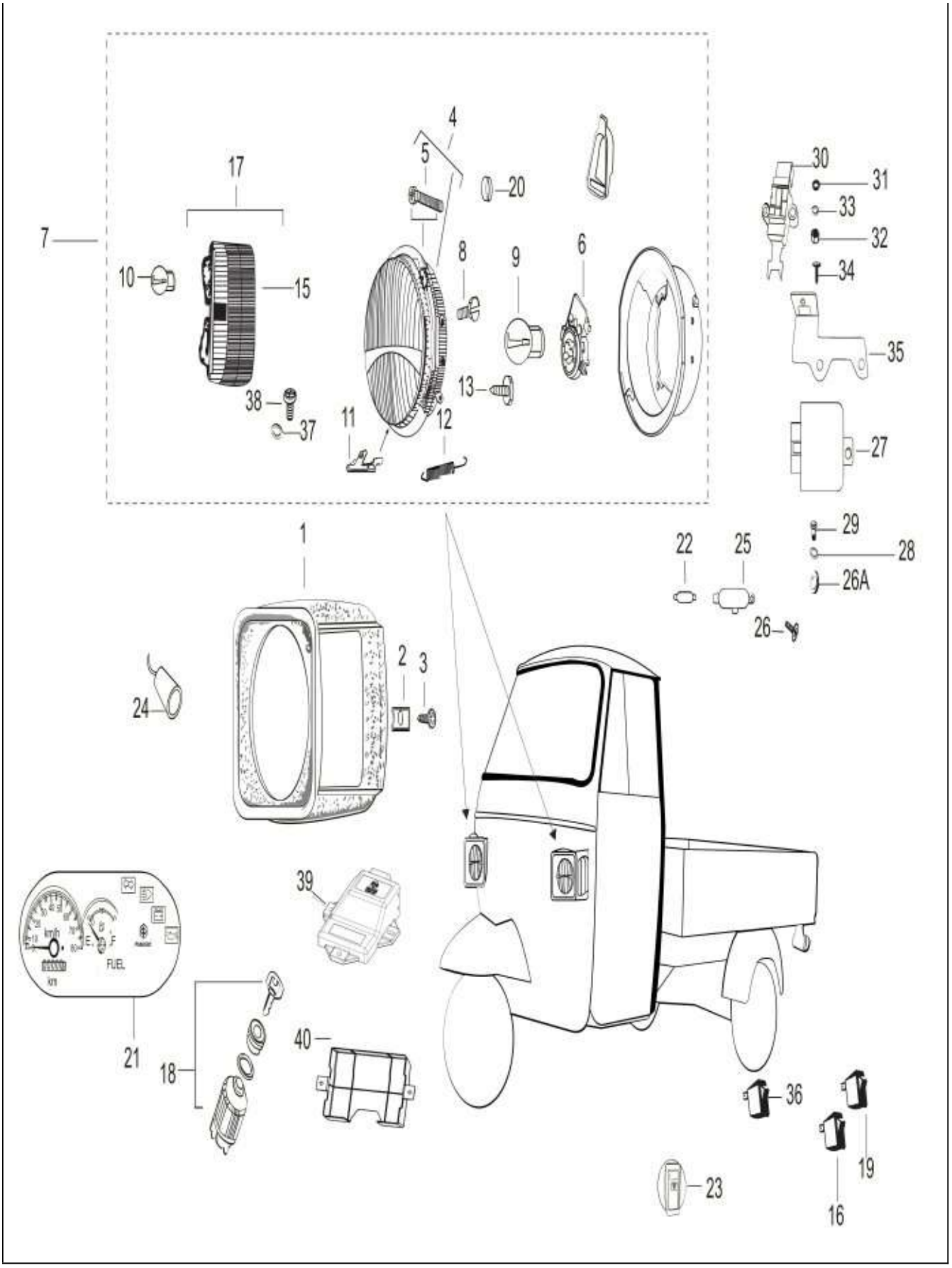
7
17
10
15
38
37
4
5
20
8
9
6
13
11
12
30
31
33
32
34
35
27
29
28
26A
22
25
26
1
2
3
24
39
FUEL
21
18
40
36
19
16
23

107

Print Date: 05-Oct-2022

PLATE-41

Head lamp & Electrical Device

Fig. No.	Part No.	Description	Qty	Remarks
26	15727	PAN SELF TAPPING SCREW	4	
26A	3054	PLAIN WASHER	4	
27	B023726R	REMOTE CONTROL SWITCH	1	not Applicable
28	3056	PLAIN WASHER M6 OD12	1	
29	31088	HEX HD SCREW M6 X 16 CL 8.8 (811061623)	1	
30	B076115	STARTER SAFETY SWITCH ASSLY.	1	
31	16404	SPRING WASHER M4	2	
32	20104	HEX NUT M4	2	
33	3054	PLAIN WASHER	4	
34	B001503	PHILP RD HD SCREW (M4 X 20)	2	
35	B002101	STARTER SAFETY SWITCH ASSLY.	1	
36	B023727R	CONTACTOR	1	not Applicable
37	3055	PLAIN WASHER M5	2	
38	661925	PHILIP PAN HEAD SCREW (M5 X 0.8 X 1.6)	4	
39	EN01A130002	LPI CONTROLLER	1	
40	6D001593	COVER,ECU PROTECTION	1	

108

Print Date: 05-Oct-2022

PLATE-42

Tail Lamp & Electrical Device

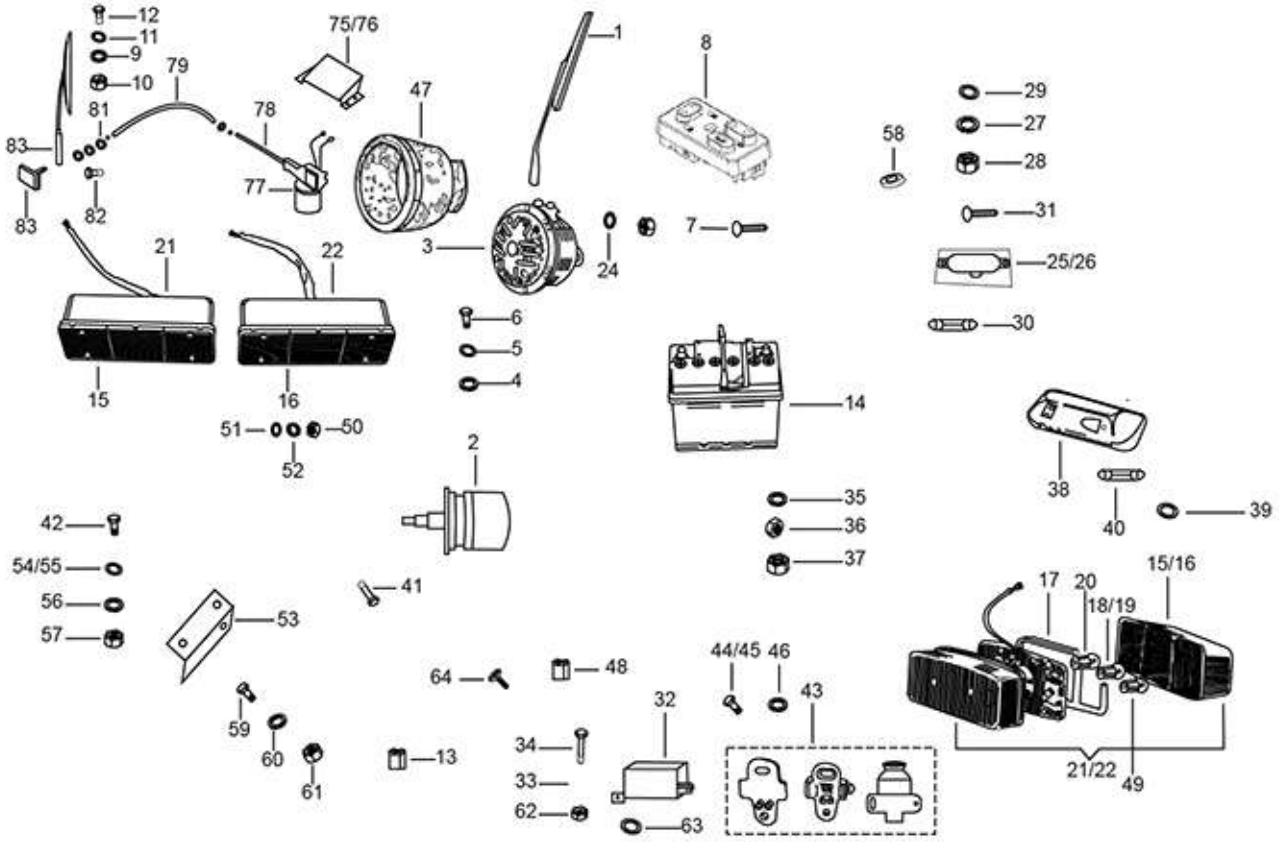
12
11
9
10
79
81
83
83
82
75/76
78
77
47
1
8
29
27
28
58
31
25/26
30
7
3
24
21
22
6
5
4
15
16
14
51
50
52
2
38
40
39
35
36
37
42
54/55
56
57
41
53
17
20
18/19
15/16
64
48
44/45
46
43
32
59
60
61
13
34
33
62
63
21/22
49

109

Print Date: 05-Oct-2022

PLATE-42

Tail Lamp & Electrical Device

Fig. No.	Part No.	Description	Qty	Remarks
1	632292	WIPER ARM & BLADE ASSY	1	
2	632995	WIPER MOTOR ASSY. WITH MTG. BKT.	1	
3	B041000R	HORN 3 WH _ E MARK	1	
4	16408	SPRING WASHER M8	1	
5	3058	PLAIN WASHER 15X8.4X1.5	1	
6	31116	HEX HD. SCREW M8X16	1	
7	15640	SCREW SECURING SWITCH	1	
8	B073366R	HANDLE BAR SWITCH ASSLY-NEW	1	
8	B073850R	HBS (ST. BUTTON) - CITY UPGRADE (NEW) _ALL NUOVO MODEL	1	
9	16406	SPRING WASHER M6 OD12	6	
10	20106	HEX NUT M6	6	
11	3056	PLAIN WASHER M6 OD12	6	
12	31088	HEX HD SCREW M6 X 16 CL 8.8 (811061623)	6	
13	604557	FUSE (10A)	6	
14	6D000015R	BATTERY	1	Domestic
15	920083	TAIL LAMP LENSE LH WITH HARDWARE & GASKET	13	
16	920084	TAIL LAMP LENSE RH WITH HARDWARE & GASKET	1	
17	925603	PACKING	1	
18	181746	INDICATOR BULB 12V 10W	2	
19	925581	INDICATOR LIGHT BULB 12V 21W AMBER COLOUR	2	
20	567700	BULB 10/5W (STOP LIGHT)	2	
21	B024537R	TAIL LAMP ASSLY - LH	1	
22	643705R	TAIL LAMP ASSY. RH	1	
23	925571	CABLE RACK (033200/PGO)	1	
24	16408	SPRING WASHER M8	1	
26	643616	CABIN LAMP (N.I.)	1	
27	16406	SPRING WASHER M6 OD12	2	
28	20106	HEX NUT M6	2	
29	3056	PLAIN WASHER M6 OD12	2	
30	71633	STOP AND PARKING BULB 12V 10/5 W	1	
31	15727	PAN SELF TAPPING SCREW	2	
32	B023727R	CONTACTOR	1	not App.
33	12546	PLAIN WASHER / MULTI TOOTH LOCK WASHER M5	2	
34	31057	HEX HEAD SCREW M5 X 14 CL 8.8	2	
35	3055	PLAIN WASHER M5	2	

110

Print Date: 05-Oct-2022

PLATE-42

Tail Lamp & Electrical Device

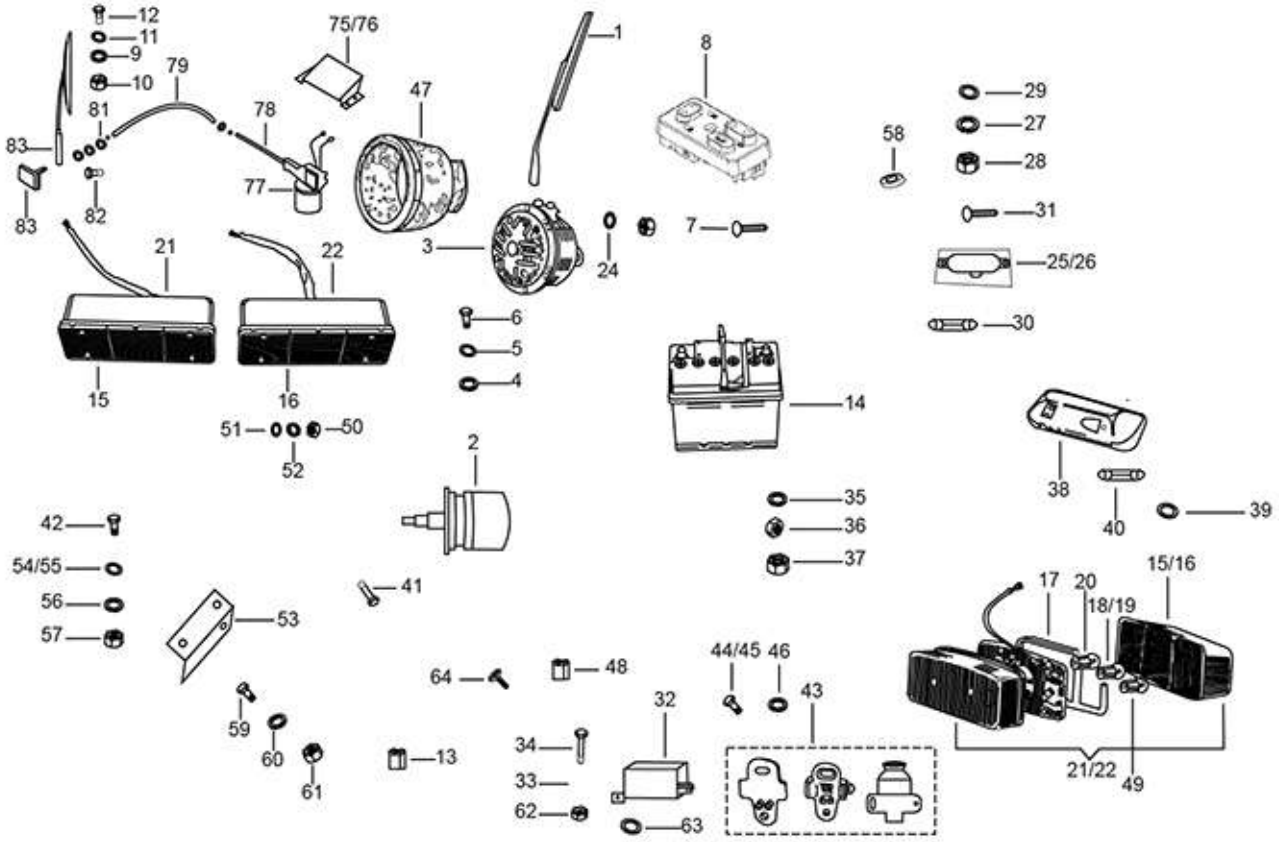
12
11
9
10
79
81
83
83
82
78
77
75/76
47
1
8
29
27
28
58
31
25/26
30
7
3
24
21
22
6
5
4
15
16
14
51
50
52
2
38
40
39
35
36
37
42
54/55
56
57
41
53
17
20
18/19
15/16
64
48
44/45
46
43
32
59
60
61
13
34
33
62
63
21/22
49

111

Print Date: 05-Oct-2022

PLATE-42

Tail Lamp & Electrical Device

Fig. No.	Part No.	Description	Qty	Remarks
36	20105	PLAIN NUT M5	2	
37	20108	HEX NUT M8	1	
38	150915R	REGISTRATION PLATE LAMP ASSY	1	E - Marked (Export)
39	12536	SPRING WASHER	1	
40	71633	STOP AND PARKING BULB 12V 10/5 W	1	
41	8451	PAN SELF TP SCREW 6 SGX13 AB	2	
42	31058	HEX HEAD SCREW M5 X 16 CC8.8	2	
43	567498R	BRAKE/REVERSE LIGHT SW (INTEGRAL CAP)-PAV	1	
44	568750	PLAIN RDHD SCREW M4 X 16	2	
45	15996	PHIL RD HD SCREW M4X12	2	
46	3054	PLAIN WASHER	2	
47	645041	HORN PROTECTION	1	
48	567706	FUSE 30 A	1	
49	181747	REVERSE LAMP BULB 12V 5W	2	
50	12136	NUT / NYLOCK NUT M5	2	
51	6078	PLAIN WASHER 12 X 5.2 X 1	2	
52	16405	SPRING WASHER M5	2	
53	660109	FUSE BOX BKT	1	
54	3055	PLAIN WASHER M5	4	
55	6078	PLAIN WASHER 12 X 5.2 X 1	4	
56	6965	SPRING WASHER DIA 5	2	
57	20105	PLAIN NUT M5	2	
58	77055	RING	1	
59	31056	HEX HEAD SCREW M5 X 12 CL. 8.8	2	
60	6965	SPRING WASHER DIA 5	2	
61	20105	PLAIN NUT M5	1	
62	20105	PLAIN NUT M5	1	
63	3055	PLAIN WASHER M5	1	
64	15911	PAN SELF TAP SCREW 8SG X 16 AB	1	
65	925567	GEAR PLATE ASSLY (034500/4)	1	
66	569165	DOME NUT	1	
67	B009290	STRAP ASSY.	1	
68	568714	BATTERY COVER	1	
69	661231	CIRCLIP STEERING LOCK DIA 16 (INT)	1	
70	925584	BULB 12 V 21W CLEAR (PARKING AND INDICATOR)	1	

112

Print Date: 05-Oct-2022

PLATE-42

Tail Lamp & Electrical Device

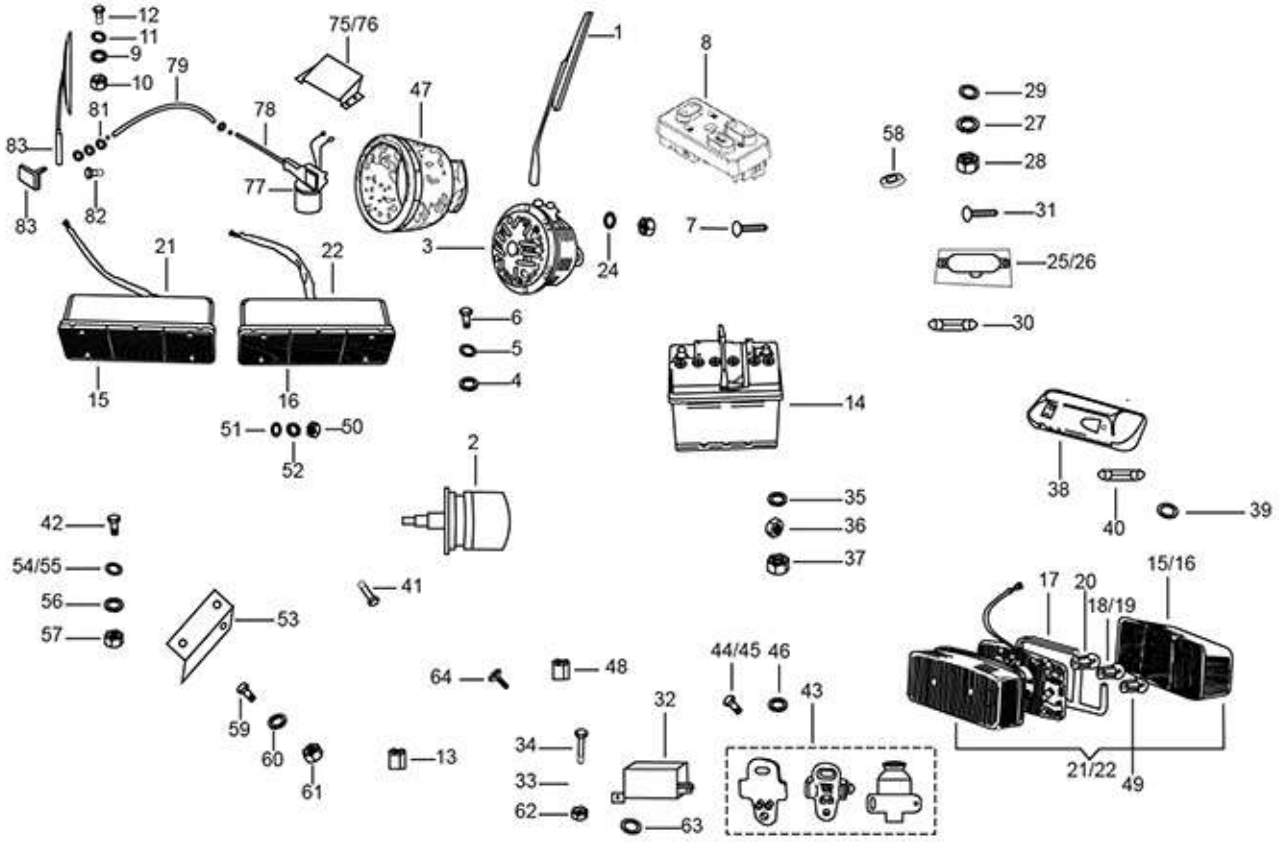
12
11
9
10
79
81
83
83
82
75/76
78
77
47
1
8
29
27
28
58
31
25/26
30
7
3
24
21
22
6
5
4
15
16
14
51
50
52
2
38
40
39
35
36
37
42
54/55
56
57
41
53
17
20
18/19
15/16
64
48
44/45
46
43
59
60
61
13
34
33
62
32
63
21/22
49

113

Print Date: 05-Oct-2022

PLATE-42

Tail Lamp & Electrical Device

Fig. No.	Part No.	Description	Qty	Remarks
71	925585	LENS MOUNTING SCREW FOR LATERAL LAMP - NEOLITE MAKE	1	
72	925589	LENSE MOUNTING SCREW (N.I.)	1	
73	925605	TAIL LAMP GLASS - RH (LUMAX)	1	
74	925604	TAIL LAMP GLASS - LH (LUMAX)	1	
75	569166	WIPER MOTOR MOUNTING BRACKET	1	
76	632995	WIPER MOTOR ASSY. WITH MTG. BKT.	1	
77	604506	BUNDY TUBE OUTER	1	
78	B076303	BUNDY TUBE (MOTOR TO WHEEL BOX)	1	FOR 501 STD.MODEL
79	604506	BUNDY TUBE OUTER	1	
80	B076304	WHEEL BOX ASSY. (MOD.)	1	
81	3054	PLAIN WASHER	2	
82	661925	PHILIP PAN HEAD SCREW (M5 X 0.8 X 1.6)	4	
83	B076304	WHEEL BOX ASSY. (MOD.)	1	

114

Print Date: 05-Oct-2022

PLATE-43
Wiper motor

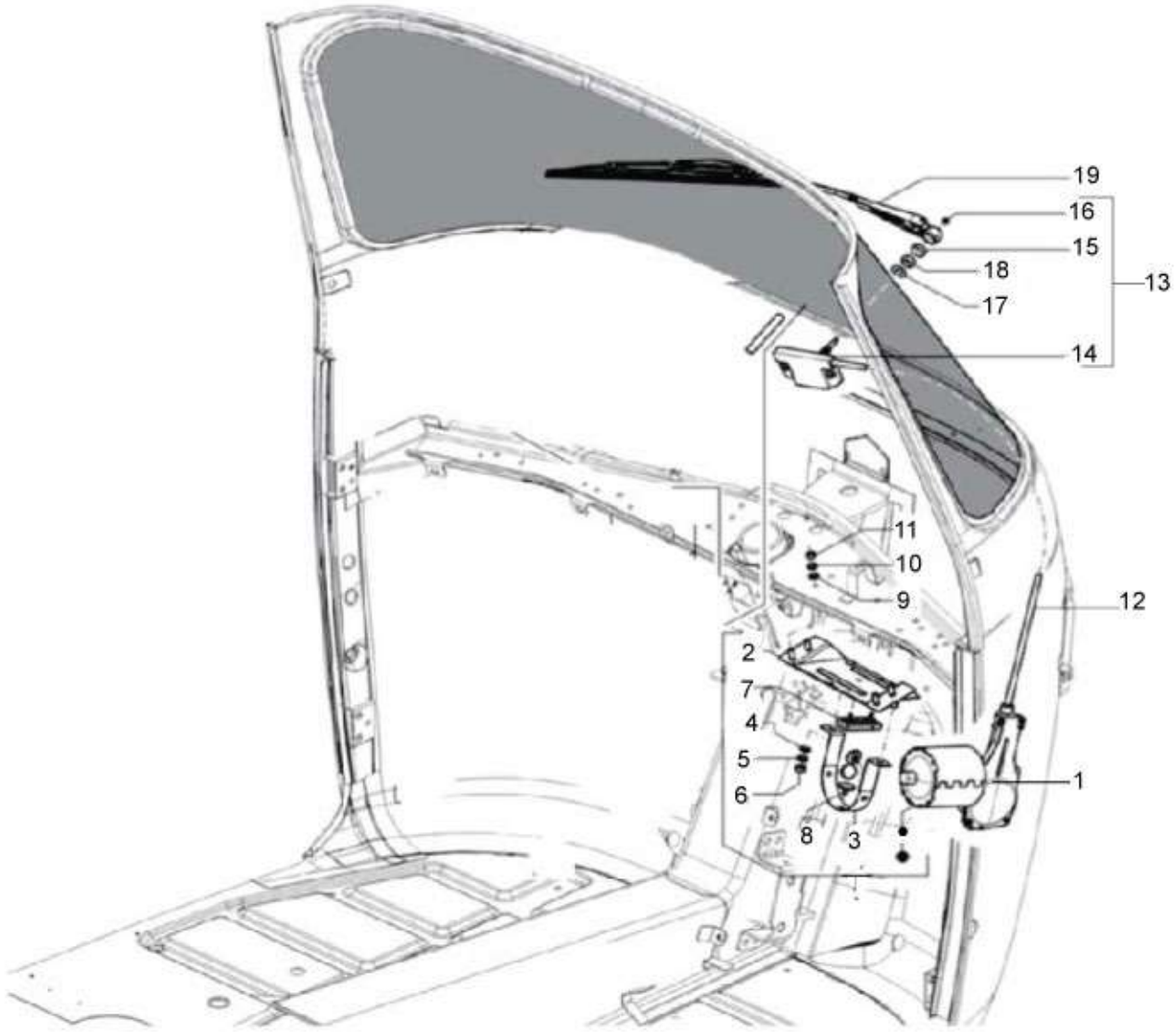
19
16
15
18
17
13
14
11
10
9
12
2
7
4
5
6
8
3
1

115

Print Date: 05-Oct-2022

PLATE-43

Wiper motor

Fig. No.	Part No.	Description	Qty	Remarks
1	632995	WIPER MOTOR ASSY. WITH MTG. BKT.	1	
2	569166	WIPER MOTOR MOUNTING BRACKET	1	
3	569177	STRAP ASSY FOR WIPER MOTOR (N.I.)	1	
4	016406	SPRING WASHER	2	
5	3056	PLAIN WASHER M6 OD12	2	
6	20106	HEX NUT M6	2	
7	569178	RUBBER PAD FOR WIPER MOTO (N.I.)	1	
9	3056	PLAIN WASHER M6 OD12	4	
10	016406	SPRING WASHER	4	
11	20106	HEX NUT M6	4	
12	B076303	BUNDY TUBE (MOTOR TO WHEEL BOX)	1	
12A	604506	BUNDY TUBE OUTER	1	NI
13	B076304	WHEEL BOX ASSY. (MOD.)	1	
14	NS	NOT SERVICEABLE	1	NS
15	NS	NOT SERVICEABLE	1	NS
16	569165	DOME NUT	1	
17	6173	METALLIC PLAIN WASHER (808001026)	1	
18	20106	HEX NUT M6	1	
19	632292	WIPER ARM & BLADE ASSY	1	
20	925571	CABLE RACK (033200/PGO)	1	NI

116

Print Date: 05-Oct-2022

PLATE-44
Wiring Harness

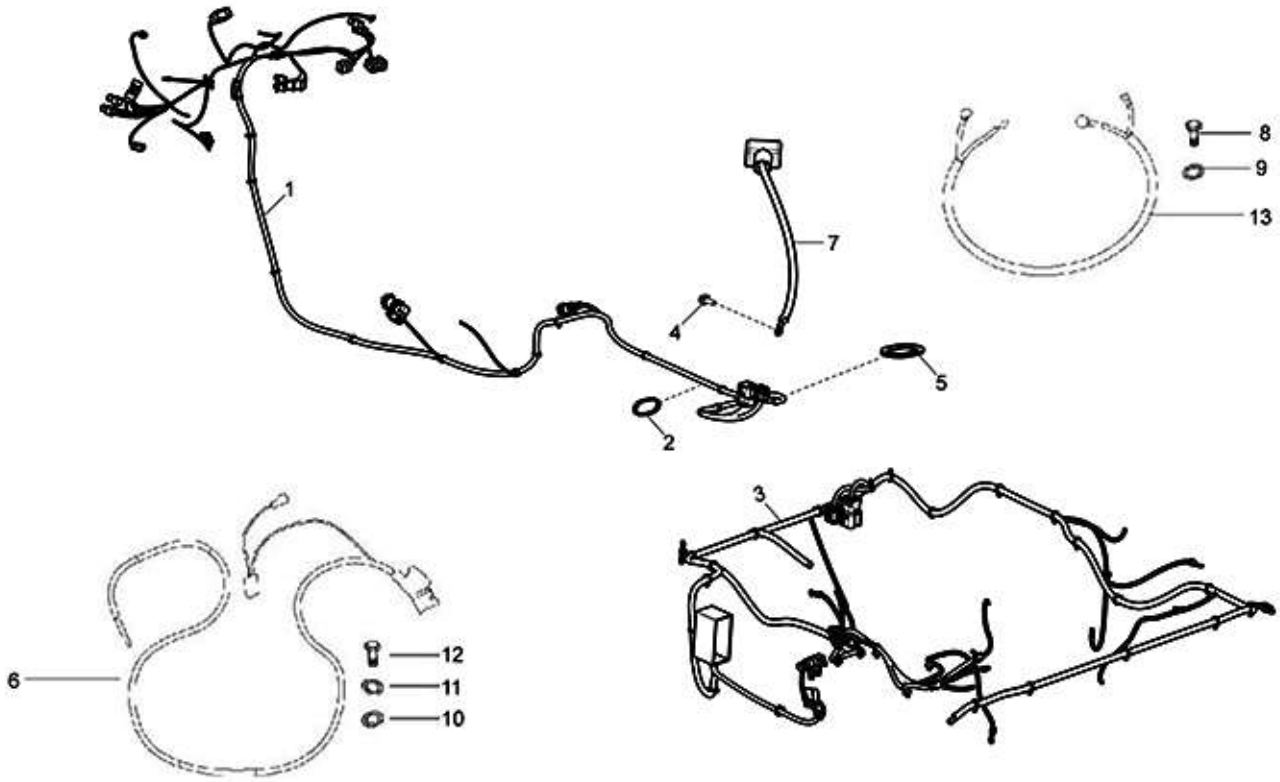
1
2
3
4
5
6
7
8
9
10
11
12
13

117

Print Date: 05-Oct-2022

PLATE-44
Wiring Harness

Fig. No.	Part No.	Description	Qty	Remarks
1	6D001466	WIRING HARNESS,IP	1	
2	B077480	GROMMET RR PART OF CENTRAL BEAM ASSLY	1	
3	6D001346	WIRING HARNESS, MAIN	1	
4	B077219	M6 X 15 FLANGED BOLT	2	
5	652252	GROMMET	1	
6	6D001348	BATTERY CABLE HARNESS,POSITIVE	1	
7	644838R	BATTERY CABLE -VE	1	
8	31116	HEX HD. SCREW M8X16	1	
9	3058	PLAIN WASHER 15X8.4X1.5	1	
10	16406	SPRING WASHER M6 OD12	1	
11	3056	PLAIN WASHER M6 OD12	1	
12	31088	HEX HD SCREW M6 X 16 CL 8.8 (811061623)	1	
13	567484	STARTER CABLE GROUP	1	NA
14	B073320R	PIG TAIL- CABIN LAMP (NEW)-PASSENGER	1	NI
15	6D000485	20A POWER RELAY	1	NI
16	6D001463	DIODE MODULE_AA0075_6AMPS	1	NI
17	6D001439	5A LITTEL FUSE_0257005	1	NI
18	6D001441	7.5A LITTEL FUSE _025707.5	1	NI
19	6D001443	10A LITTEL FUSE_0257010	1	NI
18	6D001442	15A LITTEL FUSE_0257015	1	NI
19	6D000482	30A MICRO RELAY	1	NI
20	6D001381	30A MICRO RELAY	1	NI
21	6D001440	FUSE BOX COVER W/STICKER	1	NI
25	6D000374	PIGTAIL ,LICENCE PLATE LAMP	1	NI
29	6D001590	PIGTAIL,STARTER SAFETY SWITCH	1	NI
30	6D001596	Z BRACKET,DC PIGTAIL	1	NI
31	6D001440	FUSE BOX COVER W/STICKER	1	NI

118

Print Date: 05-Oct-2022

PLATE-45

FRONT BRAKE ASSEMBLY SELF ADJUSTING (DIA 180 X 40 MM)

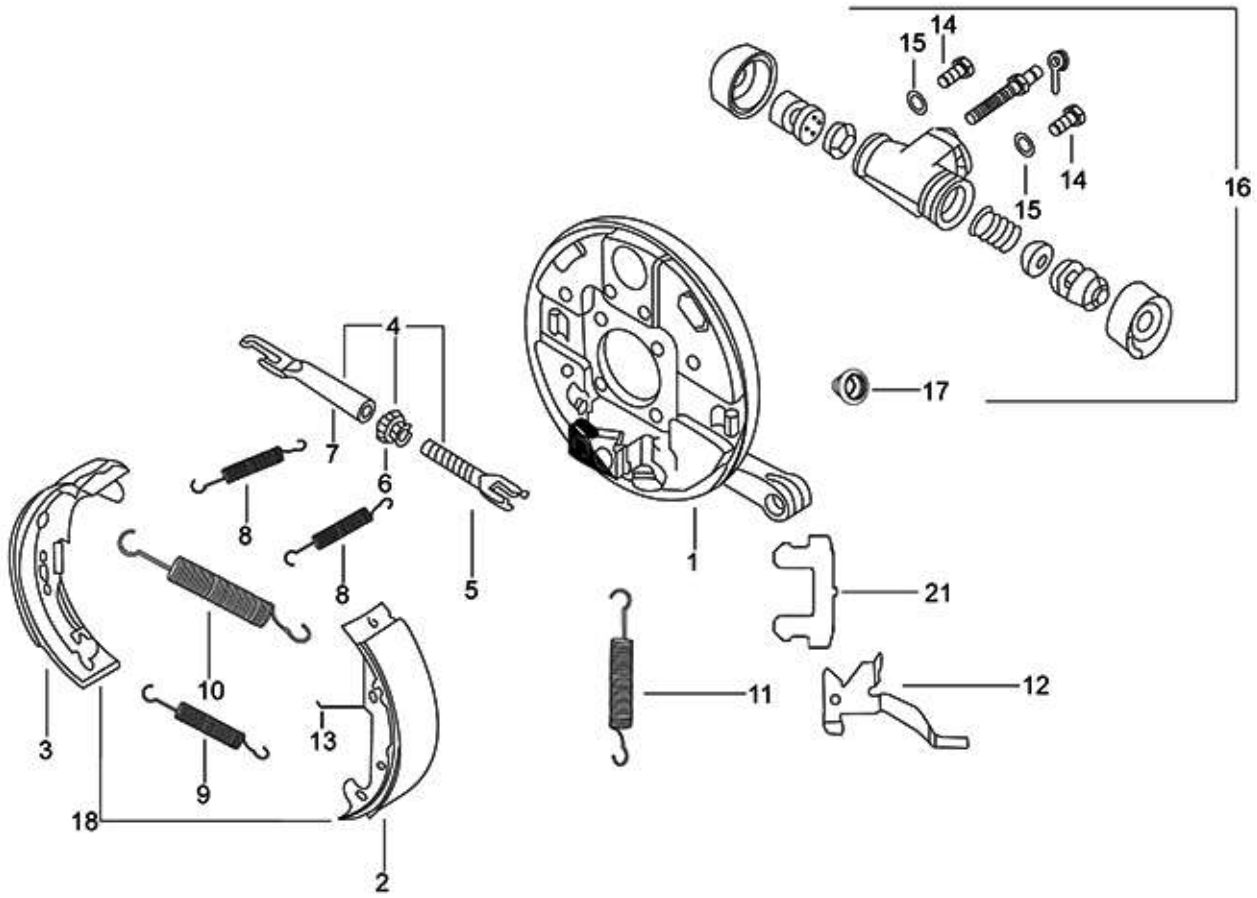
15
14
14
15
16
4
17
7
6
8
8
5
1
21
10
11
12
3
13
9
18
2

119

Print Date: 05-Oct-2022

PLATE-45

FRONT BRAKE ASSEMBLY SELF ADJUSTING (DIA 180 X 40 MM)

Fig. No.	Part No.	Description	Qty	Remarks
1	6C000275	BRACKET WHEEL CARRIER WITH PI	1	
2	B003784	LEADING SHOE COMP WITH PIN LH ANL 1643	1	
3	940004	FRONT BRAKE SHOE KIT COMPRISING OF 2 & 3	1	
4	179056	FORK ASSY LH	1	
5	178804	FORK FOR LH WHEEL	1	
6	178805	LH - GEAR	1	
7	178806	LH STRUT	1	
8	602497	JAWS STOP SPRINGS	2	
9	116088	SPRING SUPPORTING JAWS	1	
10	245038	SHOE RETURN SPRING	1	
11	178808	SPRING LEVER RETURN	1	
12	178807	LEVER LH	1	
13	178823	JUMPER LH	1	
13	178824	JUMPER	1	
14	63440	BOLT M6X12	2	
15	12536	SPRING WASHER	2	
16	587616	BRAKE CYLINDER FR ASSLY (DIA. 22.225)	1	
17	925501	CAP (KBX P 6450225)	1	
18	940004	FRONT BRAKE SHOE KIT COMPRISING OF 2 & 3	1	
19	925521	MINOR KIT WHEEL CYL. FRT (KBX 1007)	1	
20	6C000448	FRONT BRAKE ASSLY NON ASBESTOS BRAKE	1	NI -Under Development
21	6C000427	GROMMET FOR BRAKE INSPECTION HOLE	1	Under Development

120

Print Date: 05-Oct-2022

PLATE-46

REAR BRAKE ASSEMBLY SELF ADJUSTING (DIA 180 X 40 MM)

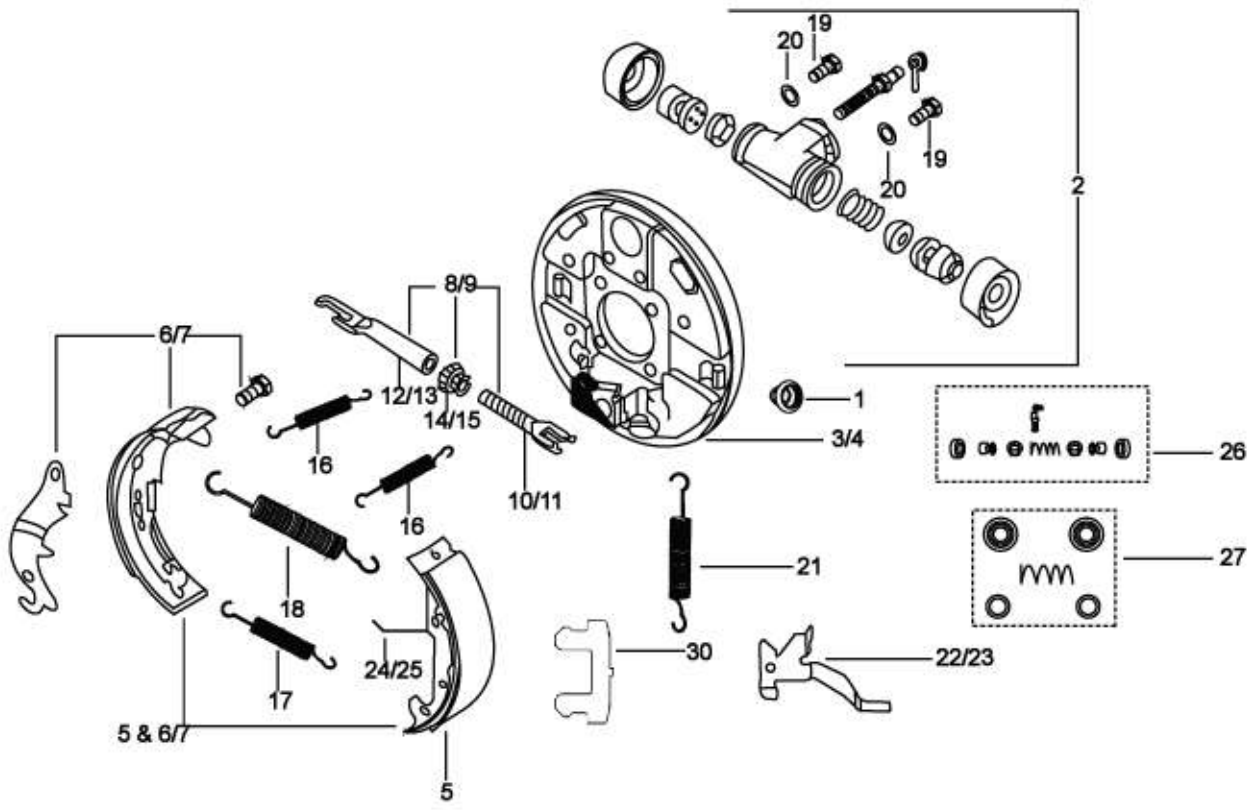
19
20
19
20
2
8/9
6/7
12/13
14/15
1
3/4
26
16
10/11
16
21
27
18
30
22/23
24/25
17
5 & 6/7
5

121

Print Date: 05-Oct-2022

PLATE-46

REAR BRAKE ASSEMBLY SELF ADJUSTING (DIA 180 X 40 MM)

Fig. No.	Part No.	Description	Qty	Remarks
1	925501	CAP (KBX P 6450225)	1	
2	632148	WHEEL CYLINDER ASSY. FRONT DIA. (25.4 MM)	1	
3	6C000277	JAWS-SUPPORTING DISK FOR LEFT WHEEL WITH	1	
4	6C000279	JAW-SUPPORT DISK FOR RIGHT WHEEL WITH AS	1	
5	B003784	LEADING SHOE COMP WITH PIN LH ANL 1643	1	
6	940005	REAR BRAKE SHOE SET L/H COMPRISING OF 5 & 7	1	
7	940006	REAR BRAKE SHOE SET R/H. COMPRISING OF 5 & 8	1	
8	179056	FORK ASSY LH	1	
9	179057	FORK ASSY. RH	1	
10	178804	FORK FOR LH WHEEL	1	
11	178818	RH FORK	1	
12	178806	LH STRUT	1	
13	178820	RH STRUT	1	
14	178805	LH - GEAR	1	
15	178819	RH GEAR	1	
16	602497	JAWS STOP SPRINGS	2	
17	116088	SPRING SUPPORTING JAWS	1	
18	245038	SHOE RETURN SPRING	1	
19	63440	BOLT M6X12	2	
20	12536	SPRING WASHER	2	
21	178808	SPRING LEVER RETURN	1	
22	178807	LEVER LH	1	
23	178821	LEVER RH	1	
24	178823	JUMPER LH	1	
25	178824	JUMPER	1	
26	925573	MAJOR KIT	1	
27	925574	MINOR KIT WHL CYL. RR	1	
28	940005	REAR BRAKE SHOE SET L/H COMPRISING OF 5 & 7	1	
29	940006	REAR BRAKE SHOE SET R/H. COMPRISING OF 5 & 8	1	
30	6C000427	GROMMET FOR BRAKE INSPECTION HOLE	1	Under Development

122

Print Date: 05-Oct-2022

PLATE1.1
CRANKCASE ASSEMBLY

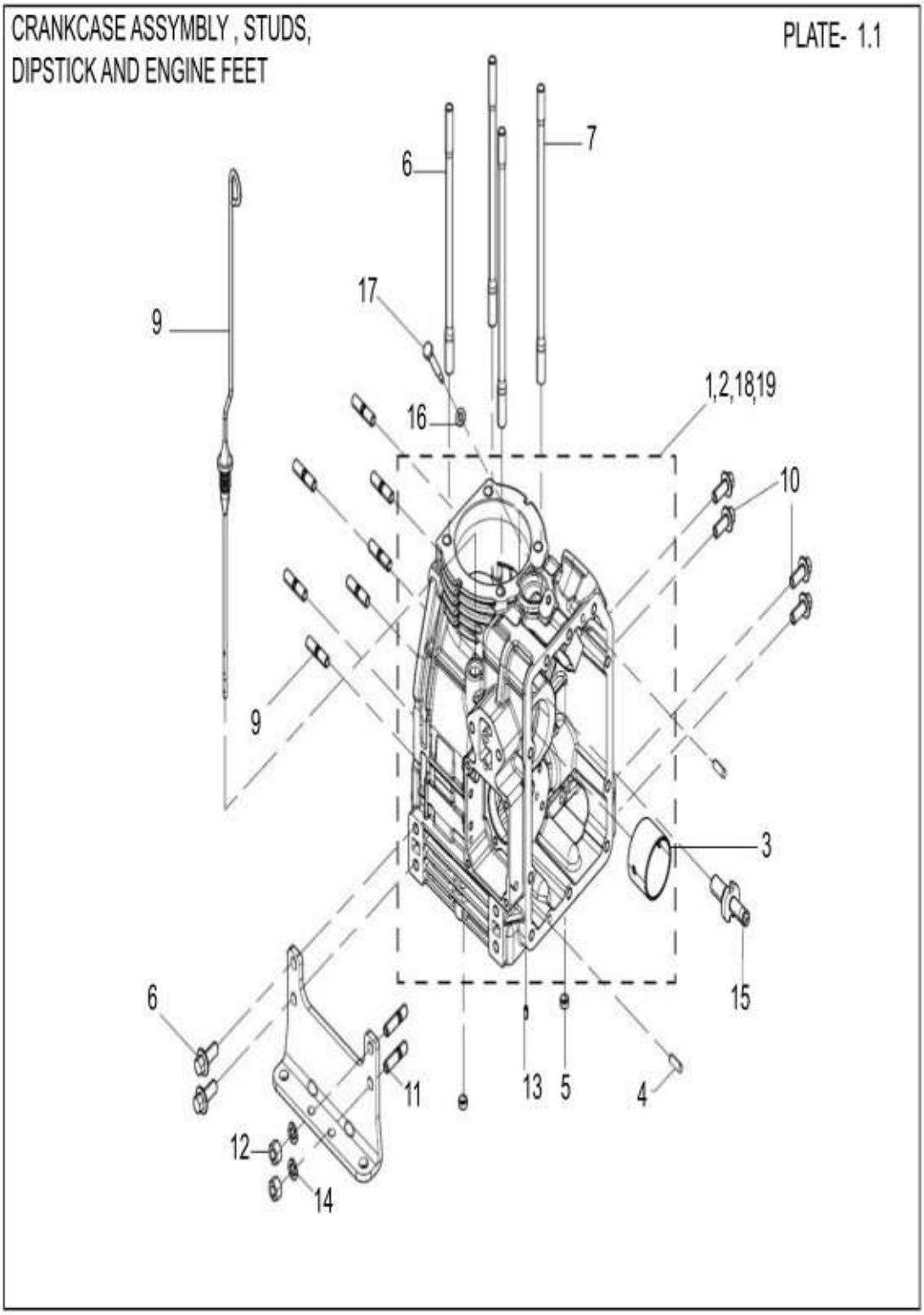
CRANKCASE ASSYMBLY , STUDS,
DIPSTICK AND ENGINE FEET
PLATE- 1.1
7
6
17
9
16
1,2,18,19
10
9
3
15
6
11
13
5
4
12
14

1

123

Print Date: 05-Oct-2022

PLATE1.1
CRANKCASE ASSEMBLY

Fig. No.	Part No.	Description	Qty	Remarks
1	EN01A010001	CRANKCASE ASSY WITH STD BUSH	1	WITH AVM PAD
2	N01A010002	CRANKCASE ASSY WITH STD BUSH	1	WITHOUT AVM PAD(NS)
3	E40002263	BUSH CRANKCASE STD	1	
4	E276846055	DOWEL -PIN	2	
5	E500197087	SLEEVE - OIL PAN IN CRANK CASE	2	
6	E43500539	STUD CYLINDER HEAD	2	
7	E43500540	STUD CYLINDER HEAD ROCKER SHAFT	2	
8	E271678054	STUD FWE SIDE	7	
9	E10G090002	DIPSTICK	1	
10	E50002805	COLLER BOLT M8 X 1.25 X 22	6	FOR REAR MTG APPLN
11	E50000506	STUD M8X1.25X34	2	FOR REAR MTG APPLN
12	E45324016	NUT	2	FOR REAR MTG APPLN
13	E500843036	DOWEL PIN	1	
14	E1756507	SPRING WASHER M8	2	
15	ED30956	PIN LH THREAD	1	
16	ED40642	WASHER (BSII) (N.I.)	1	
17	ED43340	GUIDING BOLT	1	

124

Print Date: 05-Oct-2022

PARTS INDEX

APE AUTO DX Cls 435CC BS6 DSL

125

Print Date: 05-Oct-2022

PART NO	BLOCK	PART NO	BLOCK	PART NO	BLOCK
016406	PLATE-43	119278	PLATE-27	127102010	PLATE-25
016406	PLATE-43	119735	PLATE-41	127111011	PLATE-27
016406	PLATE-24	119975	PLATE-41	127141016	PLATE-27
016406	PLATE-25	120164019	PLATE-24	127151011	PLATE-27
016408	PLATE-29	120170018	PLATE-24	127179	PLATE-41
107718	PLATE-37	120203011	PLATE-27	127185012	PLATE-24
107732	PLATE-37	120204015R	PLATE-26	127303016R	PLATE-26
107827	PLATE-36	120205019	PLATE-26	127306513R	PLATE-26
107870	PLATE-36	120212012	PLATE-25	127404016R	PLATE-27
107870	PLATE-37	120238016	PLATE-27	127451019R	PLATE-26
107871	PLATE-37	120321019	PLATE-27	127451	PLATE-38
108785	PLATE-39	12136	PLATE-42	127571015R	PLATE-27
108873	PLATE-38	12136	PLATE-25	12761	PLATE-39
108874	PLATE-38	12136	PLATE-27	127640012	PLATE-28
109012	PLATE-33	12138	PLATE-38	127641016	PLATE-28
109064	PLATE-38	122032014	PLATE-26	12778	PLATE-32
109066	PLATE-37	124102019	PLATE-27	127911019	PLATE-25
109227	PLATE-38	124112014	PLATE-27	127912013	PLATE-25
109265	PLATE-37	124113018	PLATE-27	128081017	PLATE-28
109404	PLATE-38	124121015	PLATE-27	128306015	PLATE-27
109635	PLATE-38	124140011	PLATE-27	128307019	PLATE-27
109775	PLATE-38	124141015R	PLATE-27	128633	PLATE-36
109892	PLATE-36	125012015	PLATE-27	129001014	PLATE-25
111353	PLATE-27	125181	PLATE-38	132129	PLATE-27
111356	PLATE-27	125289	PLATE-37	132134	PLATE-27
111498	PLATE-27	12536	PLATE-42	136426	PLATE-29
111498	PLATE-29	12536	PLATE-45	136434	PLATE-37
112867R	PLATE-27	12536	PLATE-46	136451R	PLATE-36
113099	PLATE-29	12536	PLATE-36	136916	PLATE-30
113278	PLATE-27	12540	PLATE-33	137026	PLATE-36
114121	PLATE-41	12546	PLATE-42	137235	PLATE-37
116088	PLATE-45	126003011	PLATE-28	13812	PLATE-39
116088	PLATE-46	126021013	PLATE-28	138237	PLATE-39
116088	PLATE-36	126022017	PLATE-28	13861	PLATE-29
116103	PLATE-34	126052012	PLATE-28	13861	PLATE-31
116103	PLATE-34	126053016	PLATE-28	13861	PLATE-33
116831	PLATE-36	126054010	PLATE-28	13880	PLATE-34
117401	PLATE-27	126060019	PLATE-28	140728	PLATE-39
117402	PLATE-27	126902	PLATE-38	142425	PLATE-34
117404	PLATE-27	126902	PLATE-40	145298	PLATE-21
118447	PLATE-33	127012019	PLATE-24	14628	PLATE-33
118806	PLATE-40	127013013	PLATE-24	150041R	PLATE-41
119278	PLATE-39	127016015	PLATE-27	150579	PLATE-37

126

Print Date: 05-Oct-2022

PART NO	BLOCK	PART NO	BLOCK	PART NO	BLOCK
150915R	PLATE-42	16408	PLATE-39	178823	PLATE-45
151924	PLATE-29	16408	PLATE-39	178823	PLATE-46
151924	PLATE-35	16408	PLATE-42	178824	PLATE-45
151924	PLATE-37	16408	PLATE-42	178824	PLATE-46
152580	PLATE-36	16408	PLATE-30	179056	PLATE-45
152580	PLATE-37	16408	PLATE-30	179056	PLATE-46
15335	PLATE-30	16408	PLATE-30	179057	PLATE-46
15335	PLATE-36	16408	PLATE-31	180431	PLATE-37
15478	PLATE-40	16408	PLATE-32	181746	PLATE-42
15478	PLATE-30	16408	PLATE-33	181747	PLATE-42
15594	PLATE-29	16408	PLATE-34	196302	PLATE-36
15594	PLATE-36	16408	PLATE-36	197071	PLATE-40
15640	PLATE-38	16410	PLATE-27	1A000236	PLATE-27
15640	PLATE-42	16410	PLATE-30	1A000236	PLATE-27
15641	PLATE-41	16410	PLATE-30	1A000612	PLATE-27
157103	PLATE-36	16410	PLATE-36	1A000826	PLATE-27
15727	PLATE-41	16410	PLATE-36	1A004807	PLATE-27
15727	PLATE-42	16410	PLATE-37	1A004807	PLATE-27
15900	PLATE-41	16410	PLATE-37	1A005176	PLATE-27
15900	PLATE-41	165121014	PLATE-27	1A006634	PLATE-24
15900	PLATE-41	165121014	PLATE-27	1A007179	PLATE-24
15911	PLATE-42	16603	PLATE-32	1A009578R	PLATE-26
15911	PLATE-30	16603	PLATE-34	1A009926	PLATE-27
15911	PLATE-33	16620	PLATE-38	1A010093	PLATE-27
15996	PLATE-42	16626	PLATE-38	1A010139	PLATE-27
16319	PLATE-38	17702	PLATE-27	1A010698R	PLATE-26
16404	PLATE-41	17702	PLATE-28	1A010700R	PLATE-26
16404	PLATE-27	17702	PLATE-32	1A011778	PLATE-27
16405	PLATE-42	178610	PLATE-30	1A011810	PLATE-27
16405	PLATE-21	178804	PLATE-45	1A014592	PLATE-27
16405	PLATE-30	178804	PLATE-46	1A014753	PLATE-24
16406	PLATE-38	178805	PLATE-45	1A015065	PLATE-23
16406	PLATE-42	178805	PLATE-46	1A016604	PLATE-25
16406	PLATE-42	178806	PLATE-45	1A017147	PLATE-23
16406	PLATE-44	178806	PLATE-46	1A017153	PLATE-23
16406	PLATE-25	178807	PLATE-45	1A017154	PLATE-23
16406	PLATE-27	178807	PLATE-46	1A017155	PLATE-23
16406	PLATE-27	178808	PLATE-45	1A017156	PLATE-23
16406	PLATE-27	178808	PLATE-46	1A017157	PLATE-23
16406	PLATE-27	178818	PLATE-46	1A017158	PLATE-23
16406	PLATE-31	178819	PLATE-46	1A017159	PLATE-23
16406	PLATE-34	178820	PLATE-46	1A017160	PLATE-23
16408	PLATE-39	178821	PLATE-46	1A017161	PLATE-23

127

Print Date: 05-Oct-2022

PART NO	BLOCK	PART NO	BLOCK	PART NO	BLOCK
1A017162	PLATE-23	220364010	PLATE-27	30072	PLATE-33
1A017163	PLATE-23	220575	PLATE-27	30074	PLATE-33
1A019307	PLATE-24	224644	PLATE-21	30077	PLATE-38
1A019553	PLATE-28	226596	PLATE-36	30209R	PLATE-26
1A019644	PLATE-24	226661	PLATE-36	30209R	PLATE-37
1F0007564	PLATE-25	226662	PLATE-36	3054	PLATE-41
1F000830	PLATE-24	229524	PLATE-39	3054	PLATE-41
20104	PLATE-41	231370	PLATE-27	3054	PLATE-42
20104	PLATE-27	231370	PLATE-30	3054	PLATE-42
20105	PLATE-39	231370	PLATE-30	3054	PLATE-27
20105	PLATE-42	231370	PLATE-36	3054	PLATE-31
20105	PLATE-42	231370	PLATE-36	3055	PLATE-38
20105	PLATE-42	231370	PLATE-36	3055	PLATE-41
20105	PLATE-42	231370	PLATE-36	3055	PLATE-42
20105	PLATE-27	237246	PLATE-36	3055	PLATE-42
20105	PLATE-30	2383	PLATE-20	3055	PLATE-42
20106	PLATE-42	2383	PLATE-30	3055	PLATE-30
20106	PLATE-42	2383	PLATE-32	3055	PLATE-30
20106	PLATE-43	2383	PLATE-33	3056	PLATE-41
20106	PLATE-43	2410508007	PLATE-17	3056	PLATE-42
20106	PLATE-43	241937	PLATE-22	3056	PLATE-42
20106	PLATE-24	243303R	PLATE-36	3056	PLATE-43
20106	PLATE-32	245038	PLATE-45	3056	PLATE-43
20106	PLATE-34	245038	PLATE-46	3056	PLATE-44
20108	PLATE-39	261323	PLATE-33	3056	PLATE-24
20108	PLATE-39	267065	PLATE-30	3056	PLATE-25
20108	PLATE-42	267065	PLATE-36	3056	PLATE-25
20108	PLATE-20	267068	PLATE-36	3056	PLATE-27
20108	PLATE-29	267068	PLATE-36	3056	PLATE-27
20108	PLATE-30	272178	PLATE-30	3056	PLATE-32
20108	PLATE-30	272178	PLATE-30	3056	PLATE-34
20108	PLATE-30	286328	PLATE-30	3057	PLATE-32
20108	PLATE-32	286328	PLATE-30	3058	PLATE-39
20108	PLATE-33	286328	PLATE-30	3058	PLATE-42
20108	PLATE-34	286328	PLATE-36	3058	PLATE-44
20110	PLATE-30	286328	PLATE-36	3058	PLATE-20
20110	PLATE-30	288730	PLATE-27	3058	PLATE-30
20110	PLATE-36	2916710602	PLATE-17	3058	PLATE-33
20110	PLATE-37	2916710603	PLATE-17	3058	PLATE-33
20110	PLATE-38	30072	PLATE-20	3058	PLATE-34
20359	PLATE-36	30072	PLATE-31	3068	PLATE-29
217280	PLATE-21	30072	PLATE-32	3068	PLATE-36
219528	PLATE-41	30072	PLATE-32	31056	PLATE-42

128

Print Date: 05-Oct-2022

PART NO	BLOCK	PART NO	BLOCK	PART NO	BLOCK
31056	PLATE-21	567498R	PLATE-42	569377	PLATE-30
31057	PLATE-42	567593	PLATE-41	587616	PLATE-45
31058	PLATE-42	567690	PLATE-39	587617	PLATE-36
31088	PLATE-41	567700	PLATE-42	587662	PLATE-33
31088	PLATE-42	567706	PLATE-42	587670R	PLATE-41
31088	PLATE-44	567719	PLATE-39	587685	PLATE-27
31088	PLATE-27	567719	PLATE-40	587685	PLATE-29
31088	PLATE-27	567741	PLATE-25	587687	PLATE-27
31088	PLATE-31	567878R	PLATE-21	587687	PLATE-29
31088	PLATE-32	567893	PLATE-31	587702	PLATE-39
31088	PLATE-34	567898	PLATE-39	587803	PLATE-40
31089	PLATE-38	567899	PLATE-39	587803	PLATE-40
31089	PLATE-38	567920	PLATE-39	587812	PLATE-40
31089	PLATE-32	567920	PLATE-31	587902	PLATE-38
31089	PLATE-34	567990	PLATE-38	587904	PLATE-38
31092	PLATE-24	567991	PLATE-38	587905PC	PLATE-32
31092	PLATE-27	567992	PLATE-38	587907	PLATE-33
31116	PLATE-42	567993	PLATE-37	587928	PLATE-39
31116	PLATE-44	568093	PLATE-31	587963	PLATE-33
31116	PLATE-30	568095	PLATE-37	587971	PLATE-29
31116	PLATE-34	568096	PLATE-34	587971	PLATE-35
31118	PLATE-39	568140	PLATE-30	587971	PLATE-37
31118	PLATE-30	568161	PLATE-39	587974R	PLATE-41
31119	PLATE-30	568260	PLATE-30	5969	PLATE-39
31119	PLATE-33	568289	PLATE-36	6018	PLATE-35
31119	PLATE-36	568689	PLATE-30	602497	PLATE-45
31122	PLATE-39	568689	PLATE-30	602497	PLATE-46
31159	PLATE-30	568702	PLATE-34	602497	PLATE-36
31159	PLATE-36	568703	PLATE-34	604502	PLATE-39
520221019R	PLATE-25	568714	PLATE-42	604506	PLATE-42
523011013R	PLATE-26	568750	PLATE-42	604506	PLATE-42
523021018	PLATE-26	569096	PLATE-33	604506	PLATE-43
526023017	PLATE-28	569150	PLATE-37	604509	PLATE-40
566545	PLATE-37	569165	PLATE-42	604515	PLATE-40
567454	PLATE-35	569165	PLATE-43	604553	PLATE-20
567455	PLATE-35	569166	PLATE-42	604557	PLATE-42
567456	PLATE-35	569166	PLATE-43	604560	PLATE-40
567457	PLATE-35	569177	PLATE-43	604560	PLATE-27
567458	PLATE-35	569178	PLATE-43	604603	PLATE-34
567459	PLATE-35	569182	PLATE-30	604606	PLATE-30
567461	PLATE-39	569244	PLATE-30	604691	PLATE-31
567473	PLATE-37	569246R	PLATE-37	604692	PLATE-31
567484	PLATE-44	569255	PLATE-37	604707	PLATE-35

129

Print Date: 05-Oct-2022

PART NO	BLOCK	PART NO	BLOCK	PART NO	BLOCK
604717	PLATE-39	643576	PLATE-36	661267	PLATE-36
604756	PLATE-20	643616	PLATE-42	661282	PLATE-36
604758	PLATE-38	643691	PLATE-31	661493	PLATE-33
604759	PLATE-38	643692	PLATE-30	661510R	PLATE-41
604785	PLATE-32	643705R	PLATE-42	661627	PLATE-33
604890	PLATE-31	643741	PLATE-36	661925	PLATE-41
604909	PLATE-21	643752	PLATE-34	661925	PLATE-42
604948	PLATE-30	643753	PLATE-34	661925	PLATE-31
60565	PLATE-38	643772R	PLATE-37	662571	PLATE-21
6066	PLATE-36	644812	PLATE-39	6650	PLATE-36
6066	PLATE-37	644812	PLATE-30	6733	PLATE-37
6078	PLATE-42	644812	PLATE-36	6965	PLATE-42
6078	PLATE-42	644813	PLATE-39	6965	PLATE-42
6078	PLATE-30	644813	PLATE-30	6A000527	PLATE-21
6078	PLATE-30	644813	PLATE-36	6A000528	PLATE-21
6078	PLATE-31	644814R	PLATE-30	6A000581	PLATE-39
611620	PLATE-20	644838R	PLATE-40	6A000581R	PLATE-40
611621	PLATE-20	644838R	PLATE-44	6A000617	PLATE-21
616896	PLATE-31	644839R	PLATE-40	6A000836	PLATE-22
616897	PLATE-31	644839R	PLATE-30	6A000936	PLATE-39
6173	PLATE-39	644973R	PLATE-29	6A000936	PLATE-40
6173	PLATE-39	644973R	PLATE-35	6A001046R	PLATE-40
6173	PLATE-43	644973R	PLATE-37	6A001169	PLATE-30
632109	PLATE-22	645041	PLATE-42	6A001637	PLATE-38
632148	PLATE-46	6450	PLATE-27	6A002022	PLATE-30
632148	PLATE-36	645124	PLATE-40	6A002024	PLATE-30
632158	PLATE-38	645141	PLATE-33	6A002028	PLATE-30
632247	PLATE-30	645153R	PLATE-41	6A002034	PLATE-20
632292	PLATE-42	645153R	PLATE-41	6A002079	PLATE-22
632292	PLATE-43	652027R	PLATE-29	6A002080	PLATE-22
632299	PLATE-30	652124	PLATE-24	6A002085	PLATE-21
632413	PLATE-20	652252	PLATE-44	6A002140	PLATE-20
632995	PLATE-42	652520	PLATE-36	6A002144	PLATE-30
632995	PLATE-42	652520	PLATE-37	6A002176	PLATE-1
632995	PLATE-43	652521	PLATE-37	6A002220	PLATE-22
63440	PLATE-45	660109	PLATE-42	6A002221	PLATE-22
63440	PLATE-46	660168	PLATE-31	6A002222	PLATE-22
63440	PLATE-36	660168	PLATE-33	6A002224	PLATE-22
640762	PLATE-38	660207ED	PLATE-33	6A002233	PLATE-22
6411	PLATE-39	660931	PLATE-29	6A002234	PLATE-22
6414	PLATE-39	661231	PLATE-42	6A002235	PLATE-22
642032	PLATE-38	661231	PLATE-37	6A002237	PLATE-22
643576	PLATE-29	661266	PLATE-36	6A002238	PLATE-22

130

Print Date: 05-Oct-2022

PART NO	BLOCK	PART NO	BLOCK	PART NO	BLOCK
6A002239	PLATE-22	6B003727WR	PLATE-32	6D001226	PLATE-31
6A002240	PLATE-22	6B003909	PLATE-34	6D001237	PLATE-31
6B000387ED	PLATE-33	6B003967	PLATE-33	6D001346	PLATE-44
6B000485	PLATE-33	6C000016	PLATE-29	6D001348	PLATE-40
6B000557	PLATE-33	6C000016	PLATE-27	6D001348	PLATE-44
6B001118	PLATE-33	6C000041	PLATE-27	6D001381	PLATE-44
6B001129	PLATE-33	6C000041	PLATE-29	6D001439	PLATE-44
6B001132	PLATE-32	6C000060	PLATE-36	6D001440	PLATE-44
6B001140	PLATE-33	6C000124	PLATE-39	6D001440	PLATE-44
6B001455	PLATE-32	6C000190	PLATE-38	6D001441	PLATE-44
6B001495R	PLATE-33	6C000191	PLATE-38	6D001442	PLATE-44
6B001496R	PLATE-33	6C000275	PLATE-45	6D001443	PLATE-44
6B001520	PLATE-32	6C000275	PLATE-37	6D001458	PLATE-31
6B001594ED	PLATE-32	6C000277	PLATE-46	6D001463	PLATE-44
6B001595ED	PLATE-32	6C000279	PLATE-46	6D001466	PLATE-44
6B001596ED	PLATE-32	6C000279	PLATE-36	6D001590	PLATE-44
6B001597ED	PLATE-32	6C000279	PLATE-36	6D001593	PLATE-41
6B001599	PLATE-32	6C000312R	PLATE-27	6D001596	PLATE-44
6B001627	PLATE-32	6C000312R	PLATE-29	6G000028	PLATE-41
6B001672	PLATE-34	6C000362	PLATE-36	7066R	PLATE-27
6B001789	PLATE-34	6C000363	PLATE-36	71633	PLATE-41
6B001921	PLATE-33	6C000382	PLATE-30	71633	PLATE-42
6B001978	PLATE-34	6C000382	PLATE-36	71633	PLATE-42
6B002166	PLATE-34	6C000427	PLATE-45	72515	PLATE-31
6B002637	PLATE-34	6C000427	PLATE-46	74414	PLATE-36
6B003176	PLATE-31	6C000443R	PLATE-39	74414	PLATE-37
6B003726BL	PLATE-32	6C000448	PLATE-45	74521	PLATE-37
6B003726BW	PLATE-32	6C000468	PLATE-39	75708	PLATE-37
6B003726BY	PLATE-32	6C000469	PLATE-39	77055	PLATE-42
6B003726CB	PLATE-32	6C000474SP	PLATE-37	78307	PLATE-34
6B003726CO	PLATE-32	6C000475SP	PLATE-37	807000647	PLATE-25
6B003726EG	PLATE-32	6C000662	PLATE-36	808000826	PLATE-25
6B003726GY	PLATE-32	6C000980	PLATE-40	808000826	PLATE-27
6B003726NB	PLATE-32	6C001002	PLATE-40	808000826	PLATE-31
6B003726WR	PLATE-32	6D000015R	PLATE-42	808000826	PLATE-32
6B003727BL	PLATE-32	6D000015R	PLATE-31	8080	PLATE-41
6B003727BW	PLATE-32	6D000374	PLATE-44	8080	PLATE-31
6B003727BY	PLATE-32	6D000374	PLATE-33	811081025	PLATE-25
6B003727CB	PLATE-32	6D000482	PLATE-44	811081025	PLATE-27
6B003727CO	PLATE-32	6D000485	PLATE-44	819064530	PLATE-28
6B003727EG	PLATE-32	6D000597	PLATE-31	822031942	PLATE-27
6B003727GY	PLATE-32	6D000948	PLATE-31	822051647	PLATE-27
6B003727NB	PLATE-32	6D000952	PLATE-31	825080209	PLATE-27

131

Print Date: 05-Oct-2022

PART NO	BLOCK	PART NO	BLOCK	PART NO	BLOCK
825080209	PLATE-28	925588	PLATE-41	B003924	PLATE-26
825123207	PLATE-24	925589	PLATE-42	B008478	PLATE-32
825420215	PLATE-25	925590	PLATE-41	B009290	PLATE-42
841005207	PLATE-26	925597	PLATE-41	B009290	PLATE-20
841005207	PLATE-27	925598	PLATE-41	B009701	PLATE-33
841005506	PLATE-27	925603	PLATE-42	B016611	PLATE-25
842001507	PLATE-26	925604	PLATE-42	B016939	PLATE-22
842001600	PLATE-24	925605	PLATE-42	B016956	PLATE-24
842002501	PLATE-26	940004	PLATE-45	B017088	PLATE-25
842002501	PLATE-27	940004	PLATE-45	B018678	PLATE-24
842003000	PLATE-27	940005	PLATE-46	B018991	PLATE-27
842004808	PLATE-26	940005	PLATE-46	B019220	PLATE-24
843000500	PLATE-27	940006	PLATE-46	B023726R	PLATE-41
843000500	PLATE-27	940006	PLATE-46	B023727R	PLATE-41
843000809	PLATE-39	940028	PLATE-27	B023727R	PLATE-42
843000809	PLATE-24	940118	PLATE-31	B023816R	PLATE-41
8432	PLATE-41	9411033428	PLATE-17	B023817R	PLATE-41
8451	PLATE-42	9451030109	PLATE-17	B024170	PLATE-21
87067	PLATE-37	9451035101	PLATE-17	B024373	PLATE-29
8771	PLATE-37	9451037405	PLATE-17	B024373	PLATE-36
880255211R	PLATE-26	A01G140013	PLATE-13	B024379	PLATE-40
880305509R	PLATE-27	A01G140013	PLATE-20	B024474	PLATE-32
884222808	PLATE-26	A01G140035	PLATE-13	B024537R	PLATE-42
889302	PLATE-21	A01G140035	PLATE-20	B024614	PLATE-27
920083	PLATE-42	A01G140036	PLATE-13	B024614	PLATE-29
920084	PLATE-42	A01G140036	PLATE-20	B024614	PLATE-30
925501	PLATE-45	A01G140037	PLATE-13	B025600	PLATE-41
925501	PLATE-46	A01G140037	PLATE-20	B025601	PLATE-41
925521	PLATE-45	A01S140001	PLATE-13	B041000R	PLATE-42
925567	PLATE-42	B001501	PLATE-25	B041600	PLATE-38
925571	PLATE-42	B001503	PLATE-41	B041653	PLATE-38
925571	PLATE-43	B001505	PLATE-40	B041668	PLATE-32
925573	PLATE-46	B001543	PLATE-22	B041852	PLATE-21
925574	PLATE-46	B001561	PLATE-37	B042317	PLATE-39
925577	PLATE-41	B001844	PLATE-25	B042486	PLATE-27
925578	PLATE-41	B001954R	PLATE-35	B042611	PLATE-34
925579	PLATE-41	B002101	PLATE-41	B042612	PLATE-34
925580	PLATE-41	B002573	PLATE-41	B042726ED	PLATE-32
925581	PLATE-41	B003155	PLATE-27	B042794	PLATE-39
925581	PLATE-42	B003282	PLATE-21	B042798	PLATE-25
925584	PLATE-42	B003286	PLATE-30	B042798	PLATE-27
925585	PLATE-42	B003784	PLATE-45	B042799	PLATE-25
925587	PLATE-41	B003784	PLATE-46	B073320R	PLATE-44

132

Print Date: 05-Oct-2022

PART NO	BLOCK	PART NO	BLOCK	PART NO	BLOCK
B073366R	PLATE-38	B077219	PLATE-44	E10A110007	PLATE-3
B073366R	PLATE-42	B077480	PLATE-44	E10A120005	PLATE-10
B073470R	PLATE-40	B077883	PLATE-31	E10A120008	PLATE-10
B073478R	PLATE-31	B077884	PLATE-31	E10A120011	PLATE-9
B073479R	PLATE-31	B077885	PLATE-31	E10B120001	PLATE-14
B073481R	PLATE-31	B078044	PLATE-33	E10B120001	PLATE-5
B073810	PLATE-31	B078223	PLATE-20	E10B120002	PLATE-5
B073811	PLATE-31	B078878	PLATE-34	E10G030001	PLATE-11
B073812	PLATE-31	D9004467161	PLATE-22	E10G030002	PLATE-11
B073813	PLATE-31	D9166140616	PLATE-21	E10G070001	PLATE-13
B073814	PLATE-31	D9166140616	PLATE-22	E10G090002	PLATE1.1
B073848	PLATE-38	E03B020001	PLATE-5	E10G110014	PLATE-10
B073849	PLATE-38	E03G100001	PLATE-11	E10G110015	PLATE-18
B073850R	PLATE-42	E03G100003	PLATE-11	E10G110020	PLATE-3
B074262	PLATE-31	E03S070003	PLATE-13	E10G120003	PLATE-15
B074905	PLATE-31	E07500428	PLATE-10	E10G120004	PLATE-14
B075220	PLATE-34	E07500819	PLATE-17	E10G120009	PLATE-18
B075269	PLATE-34	E07502803	PLATE-13	E10G120012	PLATE-17
B075444	PLATE-33	E07502804	PLATE-4	E10G120014	PLATE-17
B075687ED	PLATE-38	E07502804	PLATE-13	E10G120070	PLATE-15
B075697	PLATE-39	E07502810	PLATE-13	E10G130001	PLATE-10
B075707	PLATE-22	E07502810	PLATE-13	E10G130018	PLATE-11
B075852	PLATE-39	E07502812	PLATE-13	E10G140001	PLATE-11
B076001	PLATE-34	E07502812	PLATE-13	E10G140015	PLATE-9
B076007	PLATE-21	E07502812	PLATE-13	E10G140055	PLATE-16
B076007	PLATE-22	E07502813	PLATE-10	E10M030002	PLATE-2
B076098ED	PLATE-33	E07506189	PLATE-17	E10M030003	PLATE-2
B076115	PLATE-41	E083438200	PLATE-17	E10M070001	PLATE-13
B076120	PLATE-34	E105324008	PLATE-10	E10M070002	PLATE-13
B076303	PLATE-42	E105324008	PLATE-10	E10M110001	PLATE-8
B076303	PLATE-43	E105324008	PLATE-10	E10M110002	PLATE-8
B076304	PLATE-42	E105324008	PLATE-16	E10M110005	PLATE-8
B076304	PLATE-42	E10A050001	PLATE-2	E10M120001	PLATE-15
B076304	PLATE-43	E10A050002	PLATE-2	E10M120003	PLATE-14
B076329	PLATE-40	E10A050007	PLATE-2	E10M120004	PLATE-14
B076330	PLATE-40	E10A060001	PLATE-16	E10M120009	PLATE-10
B076455	PLATE-39	E10A060006	PLATE-16	E10M120015	PLATE-10
B076798R	PLATE-40	E10A060008	PLATE-5	E10M120019	PLATE-15
B076830	PLATE-1	E10A060009	PLATE-16	E10M120022	PLATE-9
B076830	PLATE-25	E10A060010	PLATE-16	E10M120023	PLATE-9
B076859	PLATE-37	E10A110001	PLATE-8	E10S070001	PLATE-13
B077155	PLATE-39	E10A110004	PLATE-10	E10S070002	PLATE-13
B077156	PLATE-39	E10A110006	PLATE-10	E10S070003	PLATE-13

133

Print Date: 05-Oct-2022

PART NO	BLOCK	PART NO	BLOCK	PART NO	BLOCK
E10S070013	PLATE-13	E260756505	PLATE-11	E43502821	PLATE-13
E10S070015	PLATE-13	E260973027	PLATE-6	E43503011	PLATE-12
E10S070017	PLATE-13	E264973008	PLATE-9	E43507330	PLATE-16
E10S070018	PLATE-13	E26756503	PLATE-11	E43507331	PLATE-16
E10S070020	PLATE-15	E268120034	PLATE-5	E43507359	PLATE-16
E10S110001	PLATE-8	E270973010	PLATE-10	E43509046	PLATE-12
E10T070010	PLATE-13	E271678054	PLATE1.1	E43510715	PLATE-12
E10T120001	PLATE-17	E276846055	PLATE1.1	E43511440	PLATE-2
E10T120010	PLATE-17	E27762505	PLATE-10	E43512266	PLATE-5
E10T120015	PLATE-17	E283467036	PLATE-17	E43516050	PLATE-12
E10T120016	PLATE-17	E283467036	PLATE-18	E43518358	PLATE-5
E1177001	PLATE-6	E283467036	PLATE-7	E43518363	PLATE-5
E1324010	PLATE-11	E3124017	PLATE-2	E43520139	PLATE-12
E1441570056	PLATE-17	E3824509	PLATE-9	E43520166	PLATE-12
E1756504	PLATE-9	E40000549	PLATE-13	E43520672	PLATE-13
E1756504	PLATE-10	E40000565	PLATE-11	E43521745	PLATE-4
E1756504	PLATE-10	E40000687	PLATE-17	E43522238	PLATE-5
E1756504	PLATE-11	E40001816	PLATE-6	E43526149	PLATE-13
E1756507	PLATE1.1	E40002263	PLATE1.1	E43526150	PLATE-13
E1756507	PLATE-11	E40005592	PLATE-11	E43526174	PLATE-16
E1756507	PLATE-11	E40006428	PLATE-16	E43527184	PLATE-17
E1756507	PLATE-11	E40006428	PLATE-16	E43527185	PLATE-17
E1756507	PLATE-13	E40006815	PLATE-18	E43531743	PLATE-11
E1756507	PLATE-15	E40006816	PLATE-18	E43536107	PLATE-5
E18G070003	PLATE-13	E40006817	PLATE-18	E43536108	PLATE-5
E1965140021	PLATE-8	E40006818	PLATE-18	E43536109	PLATE-5
E1965755128	PLATE-8	E40008839	PLATE-7	E43537158	PLATE-17
E1967625270	PLATE-8	E40009645	PLATE-10	E43537159	PLATE-17
E1967980064	PLATE-8	E40009648	PLATE-11	E43537175	PLATE-17
E1969695019	PLATE-8	E40015168	PLATE-10	E45324016	PLATE1.1
E200190002	PLATE-17	E40015406	PLATE-11	E45324016	PLATE-13
E200467003	PLATE-17	E40016141	PLATE-7	E45762512	PLATE-11
E200467003	PLATE-6	E40016143	PLATE-5	E45762512	PLATE-11
E200467021	PLATE-6	E40016468	PLATE-16	E47124004	PLATE-16
E202756511	PLATE-9	E40016468	PLATE-16	E47177007	PLATE-11
E250467014	PLATE-7	E40017131	PLATE-17	E47177007	PLATE-12
E250755504	PLATE-9	E40020135	PLATE-11	E50000114	PLATE-8
E250755504	PLATE-9	E40022211	PLATE-12	E50000164	PLATE-11
E250755507	PLATE-3	E40022212	PLATE-12	E50000165	PLATE-11
E25324003	PLATE-5	E43500539	PLATE1.1	E50000421	PLATE-7
E260120016	PLATE-6	E43500540	PLATE1.1	E50000437	PLATE-9
E260176012	PLATE-11	E43500578	PLATE-4	E50000452	PLATE-10
E260467001	PLATE-5	E43502768	PLATE-16	E50000475	PLATE-6

134

Print Date: 05-Oct-2022

PART NO	BLOCK	PART NO	BLOCK	PART NO	BLOCK
E50000506	PLATE1.1	E500900038	PLATE-12	E97626043	PLATE-11
E50000506	PLATE-18	E500985048	PLATE-16	E97626065	PLATE-5
E50000613	PLATE-18	E505193049	PLATE-5	E99732047	PLATE-7
E50000613	PLATE-6	E505985052	PLATE-16	ED21235	PLATE-6
E50000901	PLATE-5	E5177011	PLATE-11	ED30956	PLATE1.1
E50001213143	PLATE-6	E51981002	PLATE-9	ED30956	PLATE-16
E50002296	PLATE-12	E51981002	PLATE-8	ED33454	PLATE-5
E50002805	PLATE1.1	E52005171	PLATE-16	ED40165	PLATE-5
E50002805	PLATE-13	E52006205	PLATE-10	ED40208	PLATE-12
E50002805	PLATE-13	E52006709	PLATE-9	ED40474	PLATE-10
E50002805	PLATE-13	E5205801462	PLATE-9	ED40580	PLATE-5
E50002805	PLATE-7	E52200434	PLATE-11	ED40642	PLATE1.1
E50005625006	PLATE-6	E53002206	PLATE-3	ED41208	PLATE-6
E50006328	PLATE-4	E5405725043	PLATE-11	ED41447	PLATE-6
E50006342	PLATE-5	E5406045038	PLATE-16	ED41931	PLATE-18
E50006495029	PLATE-6	E5408480091	PLATE-2	ED42244	PLATE-6
E50006755	PLATE-9	E5508000118	PLATE-5	ED42246	PLATE-11
E50007626	PLATE-11	E5609680013	PLATE-6	ED42548	PLATE-3
E50008099	PLATE-7	E60000227	PLATE-14	ED43340	PLATE1.1
E50009205	PLATE-12	E60000831	PLATE-17	ED43350	PLATE-9
E50010157	PLATE-9	E60018078	PLATE-11	ED43751	PLATE-8
E500116011	PLATE-9	E6193361721	PLATE-11	EN01A010001	PLATE1.1
E500125708	PLATE-12	E7101901012	PLATE-17	EN01A020001	PLATE-5
E500197087	PLATE1.1	E7102800049	PLATE-9	EN01A020002	PLATE-5
E500208572	PLATE-9	E870022109	PLATE-5	EN01A020003	PLATE-5
E500220013	PLATE-9	E87022230	PLATE-5	EN01A030001	PLATE-11
E500228048	PLATE-12	E87026113	PLATE-13	EN01A070003	PLATE-13
E500324066	PLATE-9	E90303028	PLATE-4	EN01A090003	PLATE-7
E5003430070	PLATE-5	E904120213	PLATE-6	EN01A090004	PLATE-7
E500405518	PLATE-11	E904467015	PLATE-17	EN01A090005	PLATE-7
E5004580057	PLATE-15	E904850603	PLATE-8	EN01A130001	PLATE-13
E500458029	PLATE-15	E90979037	PLATE-11	EN01A130002	PLATE-41
E500493620	PLATE-9	E90979039	PLATE-11	EN01A130002	PLATE-19
E500520134	PLATE-9	E90979039	PLATE-13	EN01A140001	PLATE-13
E5005271054	PLATE-16	E91200082	PLATE-8	EN01A140002	PLATE-13
E5005680046	PLATE-5	E9121356	PLATE-4	EN01A140002	PLATE-20
E500568043	PLATE-10	E9176007	PLATE-9	EN01A190001	PLATE-5
E500575545	PLATE-5	E9177006	PLATE-11	EN01A210001	PLATE-13
E500575549	PLATE-6	E91901030	PLATE-18	EN01B130001	PLATE-13
E5006371045	PLATE-9	E9280003	PLATE-10	EN01G070004	PLATE-13
E500640030	PLATE-5	E93240076	PLATE-5	EN01G090001	PLATE-7
E500755006	PLATE-16	E9324018	PLATE-3	EN01G100002	PLATE-13
E500843036	PLATE1.1	E9324018	PLATE-18	EN01G110001	PLATE-11

135