Parts Catalog

Commercial Vehicle

ape 501 CNG LPG Pass BS-III

PIAGGIO VEHICLES PRIVATE LIMITED
Registered Office: Bund Garden Road ,Opp. Residency Club , Pune (India)

Print Date: 27-Mar-2022

PLATES INDEX

Sr No.	Plate Name	Plate No.	Page No.
1	CRANK CASE ASSEMBLY & OIL PAN	1	1-2
2	CYLINDER & PISTON	2	3-4
3	CYLINDER HEAD ASSY. & ROCKER ASSY	3	5-6
4	CONNECTING ROD & CRANK SHAFT ASSEMBLY	4	7-8
5	CRANKSHAFT SUPPORT	5	9-10
6	PTO COVER	6	11-12
7	PRESSURE RELIEF VALVE, SPIN ON OIL FILTER & PETROL FILTER	7	13-14
8	LUB OIL & GOVERNOR GEAR	8	15-16
9	CAM SHAFT, PUSH ROD & ROCKER ARM	9	17-18
10	AIR SHROUD / FLYWHEEL / ELECTRIC START SYSTEM	10	19-22
11	AIR CLEANER, EXHAUST MUFFLER	11	23-24
12	CARBURETTOR, OIL COOLER & ELECTRONIC FEED PUMP	12	25-26
13	IGNITION SYSTEM & SPARK PLUG	13	27-28
14	ENGINE SIDE COVER AND MAIN HOUSING	15	29-30
15	MAINSHAFT, SPEED GEARS AND CLUSTER GEAR	16	31-32
16	GEAR SHIFTER AND ITS CONTROL MECHANISM	17	33-34
17	DIFFERENTIAL UNIT, FARE METER HOUSING AND SPEEDO DRIVE	18	35-40
18	CLUTCH AND CLUTCH COVER	19	41-44
19	ENGINE SUPPORT	20	45-48
20	CHASSIS FRAME, FUEL TANK & SEAT	21	49-52
21	INNER PARTS OF CABIN	22	53-54
22	CHASSIS COMPONENTS	23	55-56
23	RUBBER MAT, REAR MUDGUARD	24	57-60
24	TOOLS AND WHEELS	25	61-62
25	REAR SUSPENSION	26	63-66
26	STEERING COLUMN AND FRONT SUSPENSION	27	67-70
27	HANDLE BAR AND CONTROL	28	71-74
28	BRAKE - TANDEM MASTER CYLINDER, BRAKE PIPE AND HAND BRAKES	29	75-78
29	ELECTRICAL DEVICES-1	30	79-82
30	ELECTRICAL DEVICES-2	31	83-88

Print Date: 27-Mar-2022

PLATES INDEX

Sr No.	Plate Name	Plate No.	Page No.
31	PASSENGER AUTO RICKSHAW BODY	32	89-94
32	CABLE HARNESS	33	95-96
33	FRONT BRAKE ASSEMBLY SELF ADJUSTING (DIA 180 X 40 MM)	34	97-98
34	REAR BRAKE ASSEMBLY SELF ADJUSTING (DIA 180 X 40 MM)	35	99-100
35	VANAZ KIT - CNG	36	101-106
36	LPG-KIT	37	107-112
37	AIR FILTER ASSLY. COMPLETE	11.1	113-114
38	ALUMINIUM CLUTCH ASSEMBLY	24.1	115-116
39	CLUTCH & COVER ASSEMBLY (FOR ALUMINIUM CLUTCH)	24.2	117-118

Print Date: 27-Mar-2022

PICTORIAL PLATES INDEX

PLATE-1 **CRANK CASE ASSEMBLY & OIL PAN**

Page No. :1-2

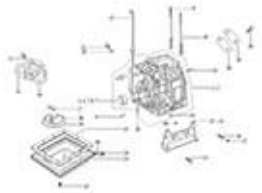

PLATE-2 **CYLINDER & PISTON**

Page No. :3-4

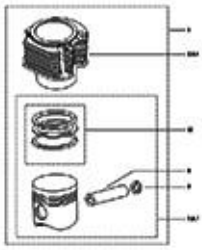

PLATE-3 **CYLINDER HEAD ASSY. & ROCKER ASSY**

Page No. :5-6

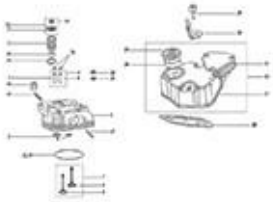

PLATE-4 **CONNECTING ROD & CRANK SHAFT ASSEMBLY**

Page No. :7-8

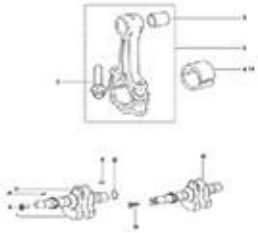

PLATE-5 **CRANKSHAFT SUPPORT**

Page No. :9-10

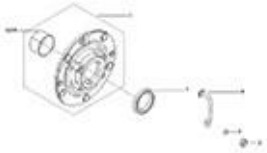

PLATE-6 **PTO COVER**

Page No. :11-12

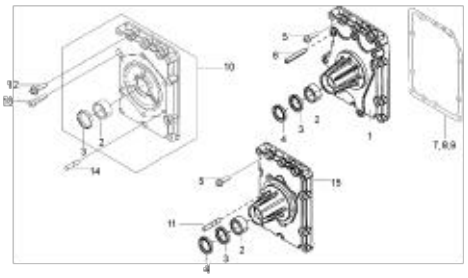

PLATE-7 **PRESSURE RELIEF VALVE, SPIN ON OIL FILTER & PETROL FILTER**

Page No. :13-14

PLATE-8 **LUB OIL & GOVERNOR GEAR**

Page No. :15-16

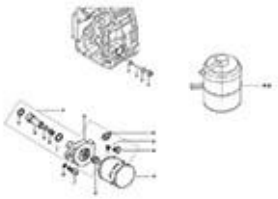

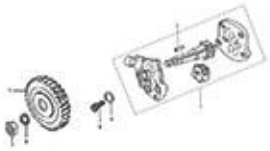

Print Date: 27-Mar-2022

PICTORIAL PLATES INDEX

PLATE-9 **CAM SHAFT, PUSH ROD & ROCKER ARM**
Page No. :17-18

PLATE-10 **AIR SHROUD / FLYWHEEL / ELECTRIC START SYSTEM**
Page No. :19-22

PLATE-11 **AIR CLEANER, EXHAUST MUFFLER**
Page No. :23-24

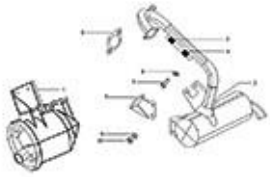

PLATE-12 **CARBURETTOR, OIL COOLER & ELECTRONIC FEED PUMP**
Page No. :25-26

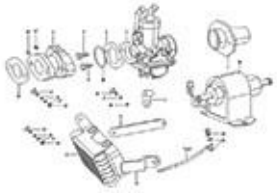

PLATE-13 **IGNITION SYSTEM & SPARK PLUG**
Page No. :27-28

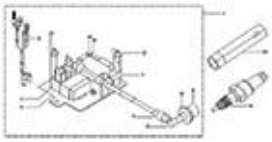

PLATE-15 **ENGINE SIDE COVER AND MAIN HOUSING**
Page No. :29-30

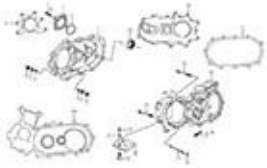

PLATE-16 **MAINSHAFT, SPEED GEARS AND CLUSTER GEAR**
Page No. :31-32

PLATE-17 **GEAR SHIFTER AND ITS CONTROL MECHANISM**
Page No. :33-34

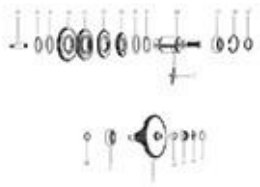

Print Date: 27-Mar-2022

PICTORIAL PLATES INDEX

PLATE-18 **DIFFERENTIAL UNIT, FARE METER HOUSING AND SPEEDO DRIVE**

Page No. :35-40

PLATE-19 **CLUTCH AND CLUTCH COVER**

Page No. :41-44

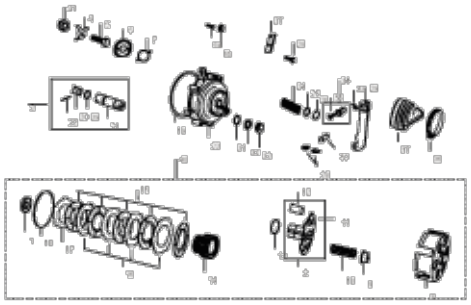

PLATE-20 **ENGINE SUPPORT**

Page No. :45-48

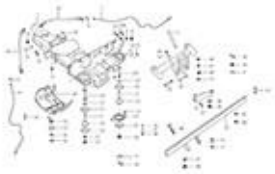

PLATE-21 **CHASSIS FRAME, FUEL TANK & SEAT**

Page No. :49-52

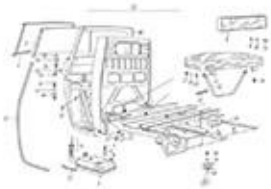

PLATE-22 **INNER PARTS OF CABIN**

Page No. :53-54

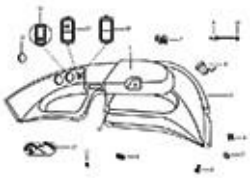

PLATE-23 **CHASSIS COMPONENTS**

Page No. :55-56

PLATE-24 **RUBBER MAT, REAR MUDGUARD**

Page No. :57-60

PLATE-25 **TOOLS AND WHEELS**

Page No. :61-62

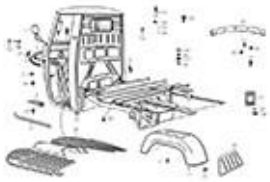

Print Date: 27-Mar-2022

PICTORIAL PLATES INDEX

PLATE-26 REAR SUSPENSION

Page No. :63-66

PLATE-27 STEERING COLUMN AND FRONT SUSPENSION

Page No. :67-70

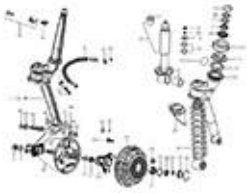

PLATE-28 HANDLE BAR AND CONTROL

Page No. :71-74

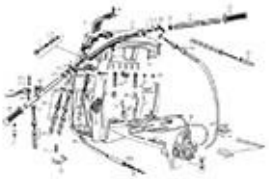

PLATE-29 BRAKE - TANDEM MASTER CYLINDER, BRAKE PIPE AND HAND BRAKES

Page No. :75-78

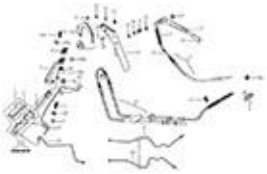

PLATE-30 ELECTRICAL DEVICES-1

Page No. :79-82

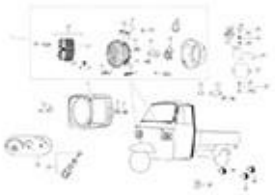

PLATE-31 ELECTRICAL DEVICES-2

Page No. :83-88

PLATE-32 PASSENGER AUTO RICKSHAW BODY

Page No. :89-94

PLATE-33 CABLE HARNESS

Page No. :95-96

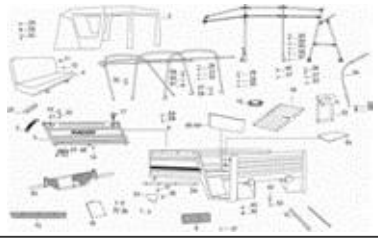

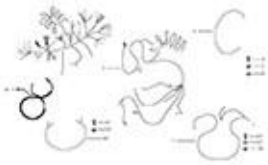

Print Date: 27-Mar-2022

PICTORIAL PLATES INDEX

PLATE-34 **FRONT BRAKE ASSEMBLY SELF ADJUSTING (DIA 180 X 40 MM)**

Page No. :97-98

PLATE-35 **REAR BRAKE ASSEMBLY SELF ADJUSTING (DIA 180 X 40 MM)**

Page No. :99-100

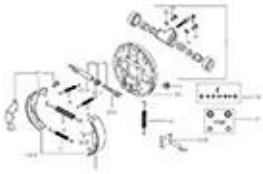

PLATE-36 **VANAZ KIT - CNG**

Page No. :101-106

PLATE-37 **LPG-KIT**

Page No. :107-112

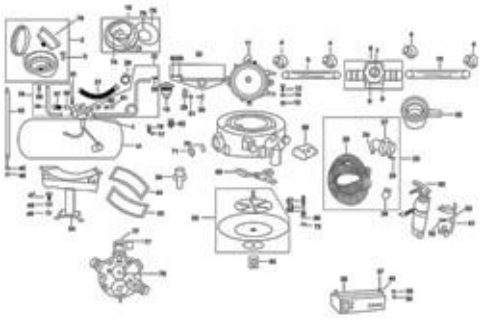

PLATE-11.1 **AIR FILTER ASSLY. COMPLETE**

Page No. :113-114

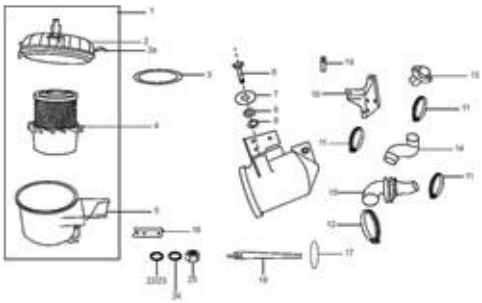

PLATE-24.1 **ALUMINIUM CLUTCH ASSEMBLY**

Page No. :115-116

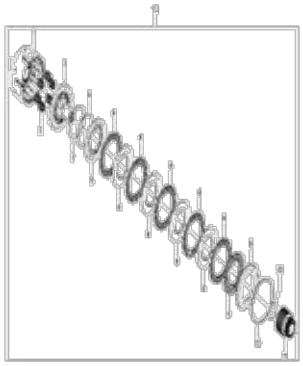

PLATE-24.2 **CLUTCH & COVER ASSEMBLY (FOR ALUMINIUM CLUTCH)**

Page No. :117-118

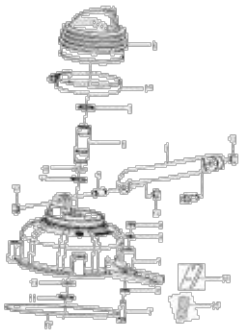

Print Date: 27-Mar-2022

PLATE-1

CRANK CASE ASSEMBLY & OIL PAN

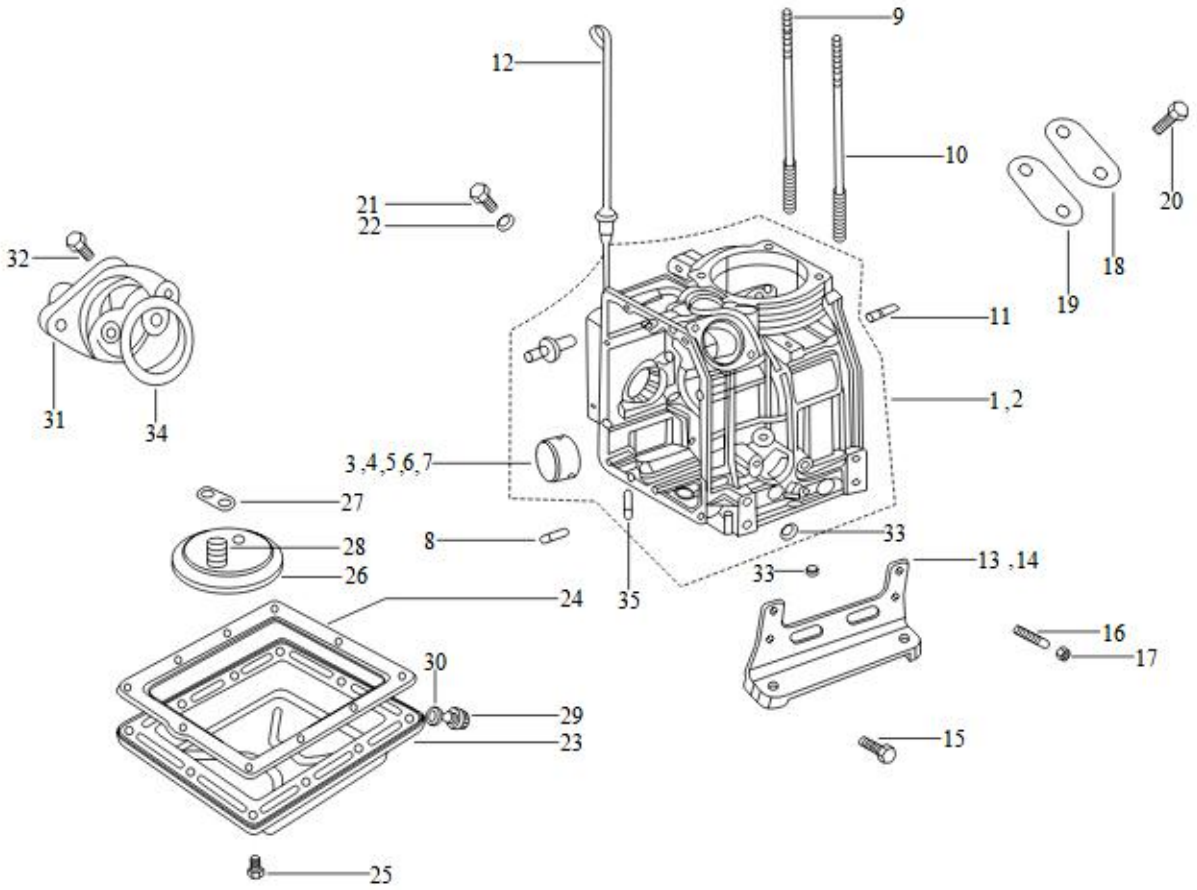
9
12
10
20
21
22
18
32
19
11
31
34
1 ,2
3 ,4,5,6, 7
27
33
28
8
13 ,14
26
33
24
35
16
17
30
29
23
15
25

1

Print Date: 27-Mar-2022

PLATE-1

CRANK CASE ASSEMBLY & OIL PAN

Fig. No.	Part No.	Description	Qty	Remarks
1	E40012525	CRANKCASE ASSY. WITH STD BUSH & CF PIN	1	
2	E40002263	BUSH CRANKCASE STD	1	
3	E40002264	BUSH CRANKCASE 0.25 MM U/S	1	
4	E40002265	BUSH CRANKCASE 0.50 MM U/S	1	
5	E40002266	BUSH CRANKCASE 0.75 MM U/S	1	
6	E40002267	BUSH CRANKCASE 1.00 MM U/S	1	
7	E276846055	DOWEL -PIN	2	
8	E5406850106	STUD CYLINDER HEAD	2	
9	E5406850108	STUD CYLINDER HEAD	2	
10	E271678054	STUD FWE SIDE	5	
11	E52008924	DIPSTICK	1	
12	E400106100	ENGINE FEET.	1	
13	E40020615	ENGINE FEET - EXHAUST SIDE	1	
14	E50002805	COLLER BOLT M8 X 1.25 X 22	6	
15	E50000506	STUD M8X1.25X34	2	
16	E07502810	COLLAR NUT M8 X 1.25	2	
17	ED33240	BLANK PLATE FOR FIP HOLE	1	
18	ED42723	JOINT FOR FIP CASING (0.5MM THICK)	1	
19	E50002805	COLLER BOLT M8 X 1.25 X 22	2	
20	E9176003	HEX BOLT	1	
21	ED40642	WASHER (BSII) (N.I.)	1	
22	E50008099	OIL PAN	1	
23	E50006169	JOINT	1	
24	E50002805	COLLER BOLT M8 X 1.25 X 22	10	
25	E50008883	SUCTION BULB ASSY.	1	
26	E40016141	JOINT SUCTION BULB	1	
27	E99732047	SCREW FOR BULB	1	
28	E50000421	MAGNETIC DRAIN PLUG M12X1.5	1	
29	E250467014	JOINT 12X19X1(JOINT DRAIN PLUG)	1	
30	ED33369	GOV. SUPPORT ASSY. FOR HOLE CLOSING	1	
31	E270973010	CAP SCREW (TUBE OIL ADAPTER)	2	
32	E500197087	SLEEVE - OIL PAN IN CRANK CASE	2	
33	E52006205	O RING	1	
34	E500843036	DOWEL PIN	1	

2

Print Date: 27-Mar-2022

PLATE-2
CYLINDER & PISTON

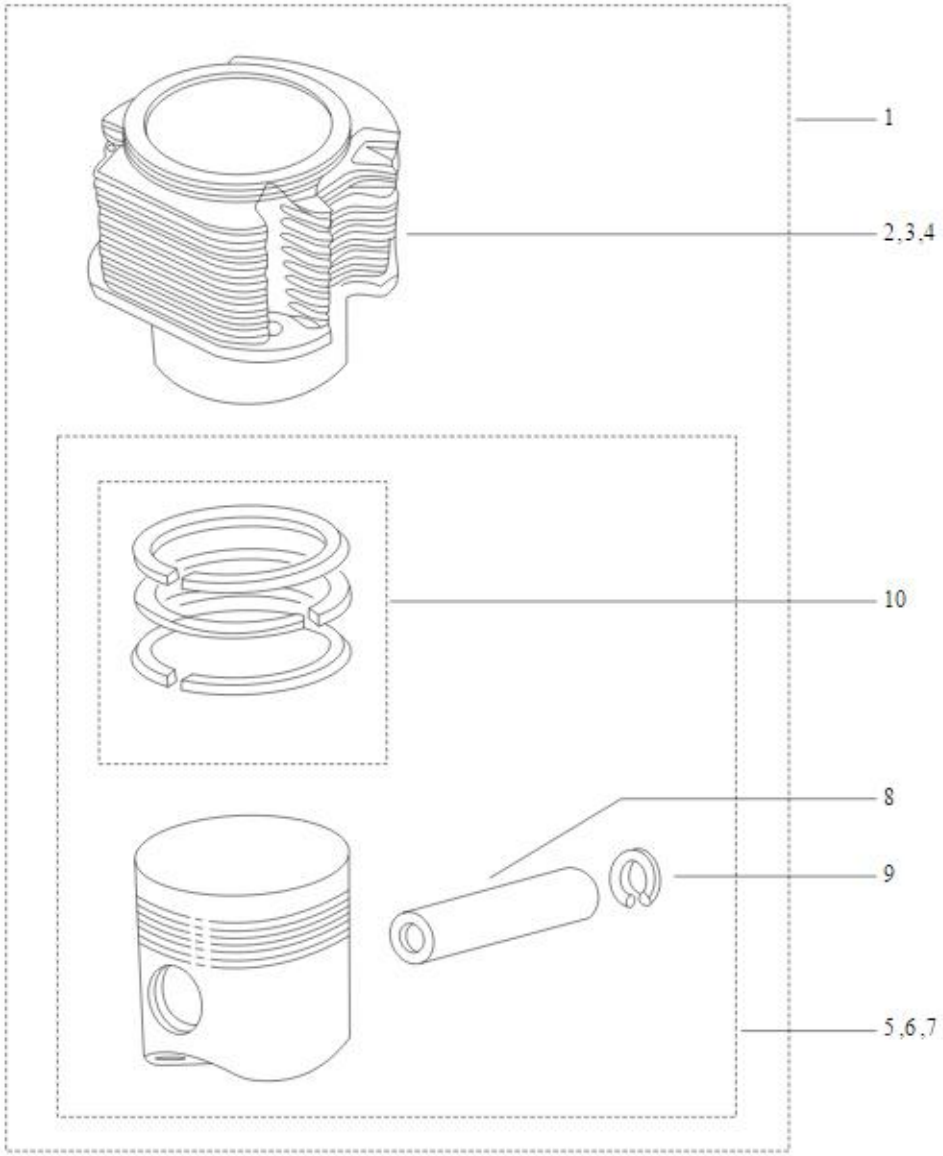
1
2,3,4
10
8
9
5,6,7

3

Print Date: 27-Mar-2022

PLATE-2
CYLINDER & PISTON

Fig. No.	Part No.	Description	Qty	Remarks
1	E40020540	CYLINDER & PISTON ASSY. KIT	1	
2	E40002075	CYLINDER GRADE A	1	
3	E40002076	CYLINDER GRADE B	1	
4	E40002077	CYLINDER GRADE C	1	
5	E40020537	PISTON ASSY GRADE A	1	
6	E40020538	PISTON ASSY GRADE B	1	
7	E40020539	PISTON ASSY GRADE C	1	
8	E5408480091A	GUGEON PIN	1	
9	E3124017	CIRCLIP 500 SR	2	
10	E40011420PA	KIT OF PISTON RING MOD BS-II	1	

4

Print Date: 27-Mar-2022

PLATE-3

CYLINDER HEAD ASSY. & ROCKER ASSY

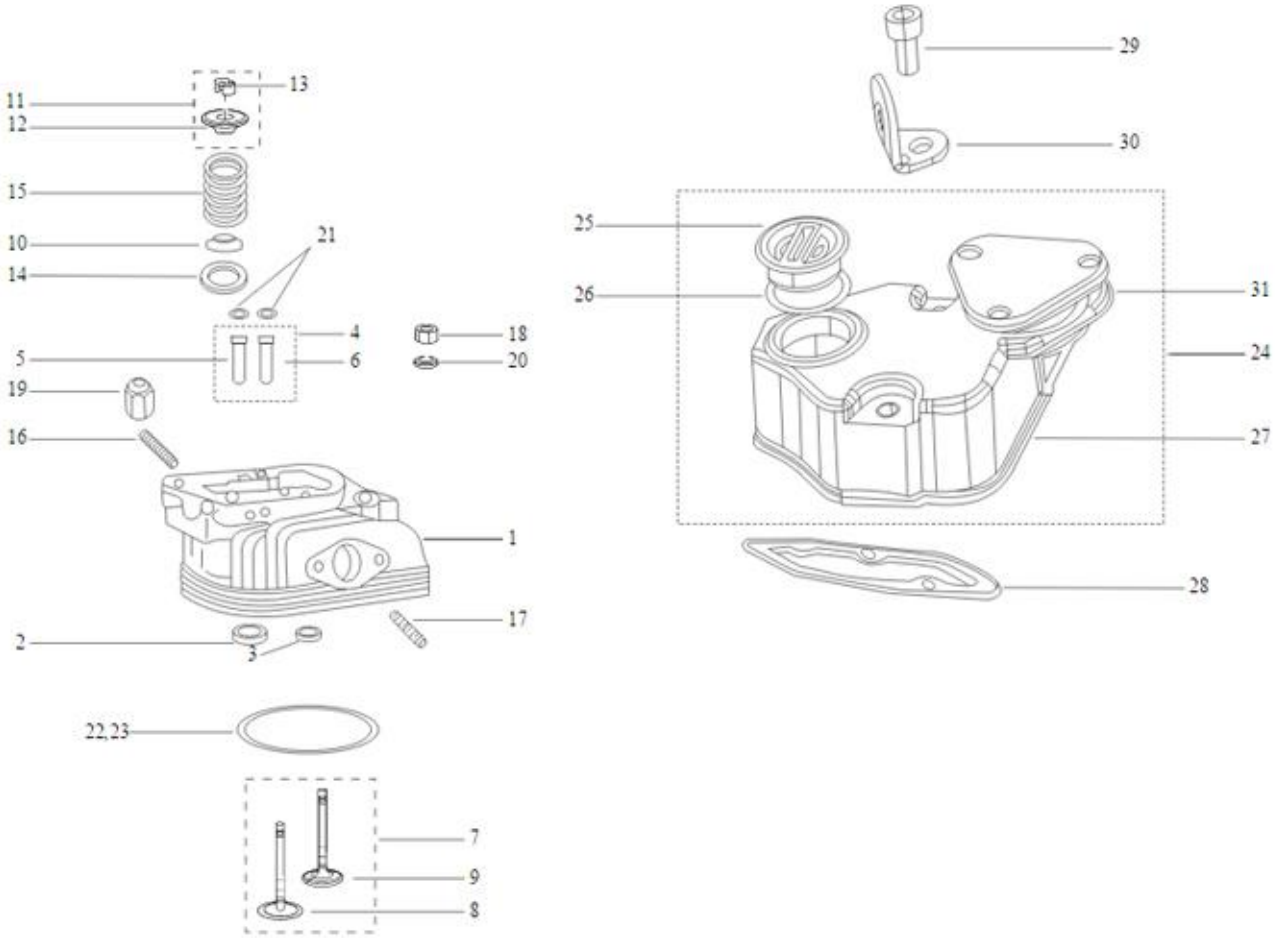
29
30
13
11
12
15
10
14
21
25
26
31
24
27
4
18
5
6
20
19
16
1
28
17
2
3
22,23
7
9
8

5

Print Date: 27-Mar-2022

PLATE-3

CYLINDER HEAD ASSY. & ROCKER ASSY

Fig. No.	Part No.	Description	Qty	Remarks
1	E40018334	CYLINDER HEAD ASSY.	1	
2	E40012238	VALVE SEAT INLET	1	
3	E40012239	VALVE SEAT EXHAUST	1	
4	E40012270	VALVE GUIDE SET CONSISTING OF SR. NOS. 5&6	1	
5	E40018356	VALVE GUIDE INLET	1	
6	E40018357	VALVE GUIDE EXHAUST	1	
7	E40012250	VALVE SET CONSISTING OF 8&9	1	
8	ED33637	VALVE INTAKE	1	
9	E40012250	VALVE SET CONSISTING OF 8&9	1	
10	E50006342	VALVE STEM SEAL	2	
11	E500641036	COLLET ASSY.	2	
12	E500640030	SPRING RETAINER TOP	2	
13	E271805703	COLLETHALF	4	
14	E5003430070	DISC	2	
15	E500575545	VALVE SPRING	2	
16	E40000549	STUD AIR INTAKE	2	
17	E50000506	STUD M8X1.25X34	2	
18	E93240076	NUT	2	
19	ED40165	DOME NUT	2	
20	E97626065	PLAIN WASHER	4	
21	E500116008	SNAP RING	2	
22	E40026134	JOINT CYL. HEAD (1.0 THK.)	1	
23	E40026135	JOINT CYL. HEAD(0.7 THK.)	1	
24	E43502764	ROCKER BOX COVER ASSY. WITH OIL FILLING 1 PLUG, CONSISTING OF SR. NO. 26 TO 28.	1	
25	E40024010	OIL FILLING PLUG	1	
26	E40006214	O RING	1	
27	E40002773	ROCKER BOX COVER ASSY.	1	
28	E43502711	JOINT FOR ROCKER COVER	1	
29	E50000114	BOLT (ALLEN)	2	
30	E904850603	LIFTING HOOK	1	
31	ED43751	SAFETY VALVE	1	

6

Print Date: 27-Mar-2022

PLATE-4

CONNECTING ROD & CRANK SHAFT ASSEMBLY

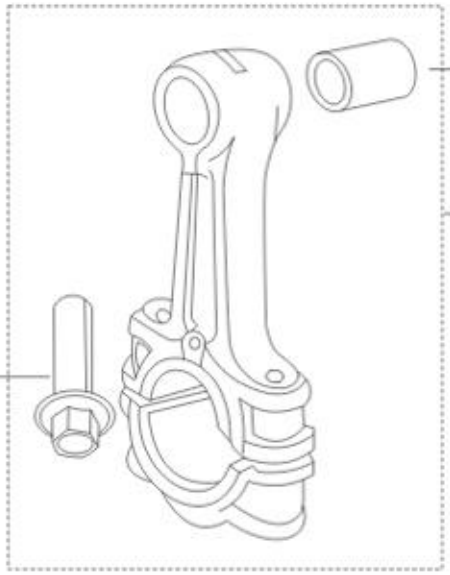
2
1
4, 5, 6
3

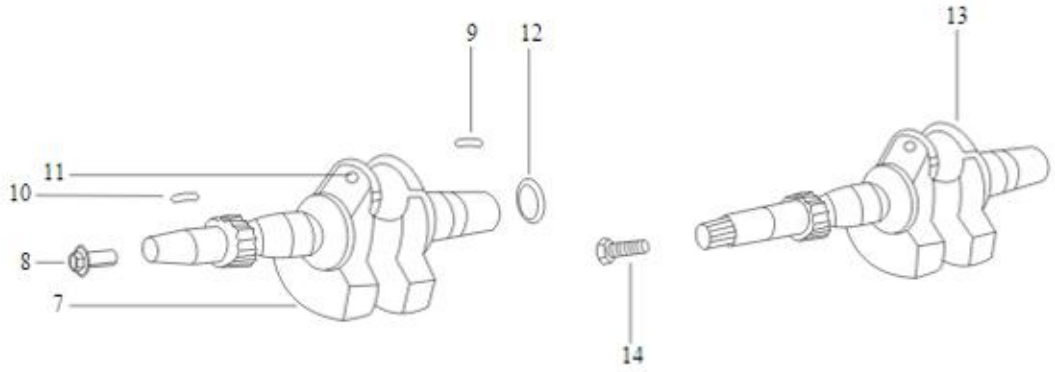
9
12
13
11
10
8
7
14

7

Print Date: 27-Mar-2022

PLATE-4

CONNECTING ROD & CRANK SHAFT ASSEMBLY

Fig. No.	Part No.	Description	Qty	Remarks
1	E50009023	CONNECTING ROD ASSY.	1	
3	E50009205	BUSH SMALL END CON ROD	1	
4	E40002818	BOLT M8X1	2	
5	E50002296A	LARGE END BEARING(SET OF 2)	1	
6	E40022211	LARGE END BEARING WITH COPPER LEAD (SINGLE HALF) 0.25 MM U/S	1	
7	E40022212	LARGE END BEARING (0.50MM U/S) WITH COPPER LEAD (SINGLE HALF)	1	
8	E50006060	CRANKSHAFT	1	
9	ED41602	BOLT PTO FLANGE FIXING	1	
10	E500228048	KEY - F.W.E.	1	
11	E70228047	KEY PTO	1	
12	E500900038	PLUG OIL HOLE	2	
13	E50006060	CRANKSHAFT	1	
14	E47177007	SCREW M8X1.25X30	1	
15	E500125708A	THRUST WASHER	1	NI

8

Print Date: 27-Mar-2022

PLATE-5
CRANKSHAFT SUPPORT

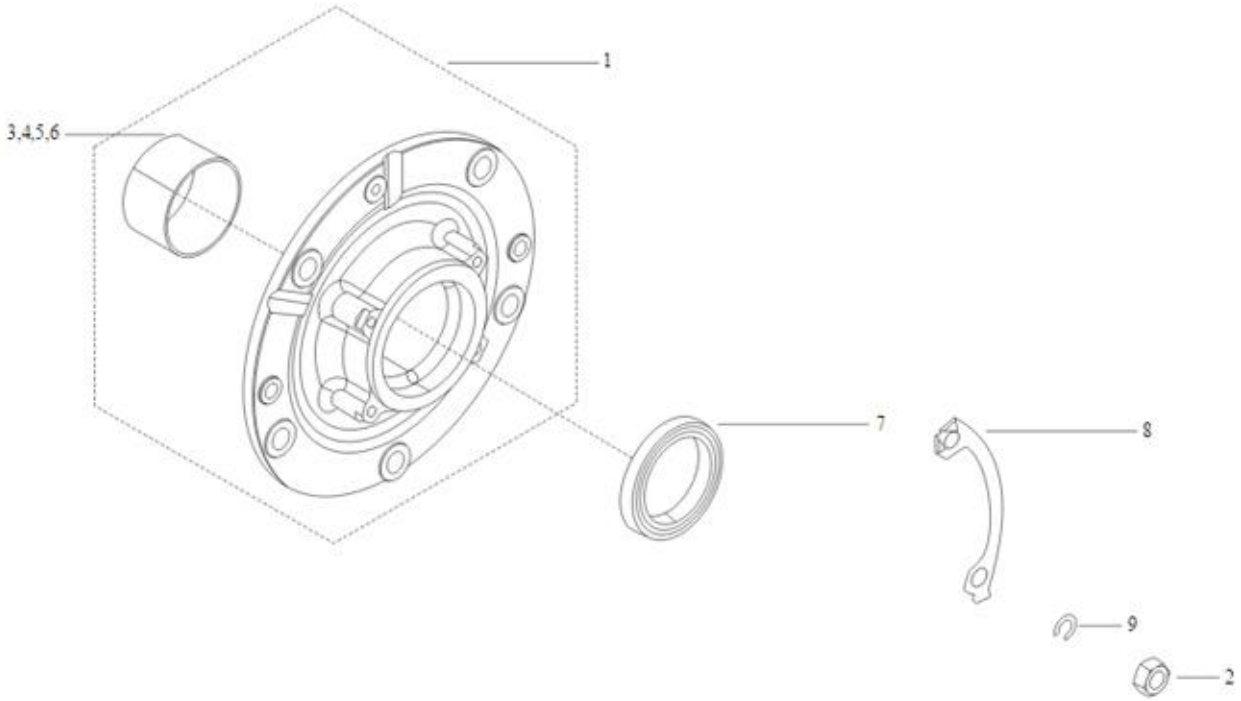
1
3,4,5,6
7
8
9
2

9

Print Date: 27-Mar-2022

PLATE-5
CRANKSHAFT SUPPORT

Fig. No.	Part No.	Description	Qty	Remarks
1	E40011772	CRANKSHAFT SUPPORT ASSY. GL400	1	
2	E9324018	NUT M8 X 1.25 X 6.5	5	
3	E53002207	BUSH FWE SIDE 0.25 MM U/S	1	
4	E53002208	BUSH FWE SIDE 0.50 MM U/S	1	
5	E53002209	BUSH FWE SIDE 0.75 MM U/S	1	
6	E53002210	BUSH FWE SIDE 1.00 MM U/S	1	
7	ED42548	OILSEAL 520/530/GL400	1	
8	ESK8832	RETAINER PLATE	3	
9	E250755507	SPRING WASHER FOR M8	5	

10

Print Date: 27-Mar-2022

PLATE-6
PTO COVER

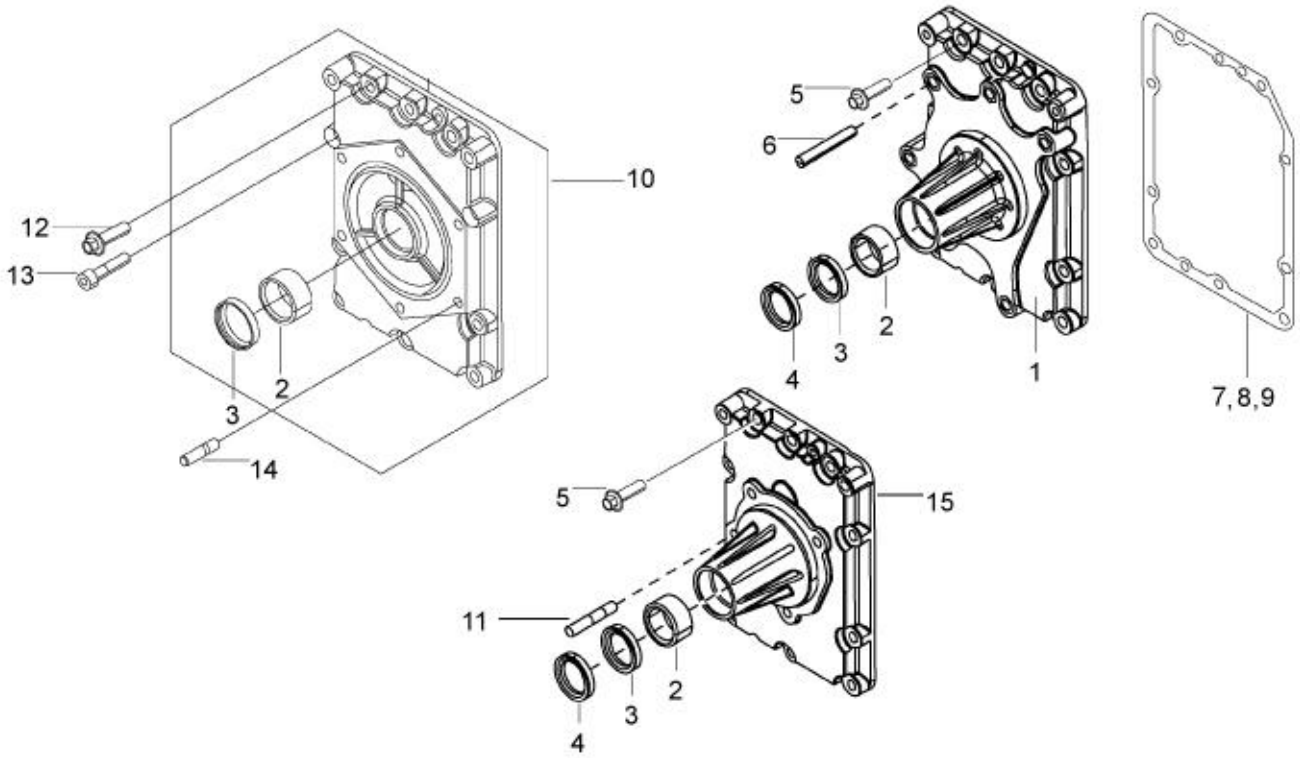
10
12
13
3
2
14
5
6
4
3
2
1
7,8,9
5
15
11
2
3
4

11

Print Date: 27-Mar-2022

PLATE-6
PTO COVER

Fig. No.	Part No.	Description	Qty	Remarks
1	E43521745	COVER PTO (SIX STUD)	1	
2	E90303028	BEARING NEEDLE	1	
3	E9121356	OIL SEAL	1	
4	E50006328	OIL SEAL	1	
5	E07502804	COLLER BOLT M8 X 1.25 X 30	10	
6	ESK4336	STUD M8 X 1.25 X 57(PTO COVER)	6	
7	E500460120	JOINT 0.2 MM	1	
8	E500460102	JOINT 0.3 MM	1	
9	E50006101	JOINT 0.4 MM	1	
10	E50007540	PTO COVER ASSY. CONSISTING OF 2,4,5	1	
11	E53000542	STUD	4	
12	E07502804	COLLER BOLT M8 X 1.25 X 30	8	
13	E422973030	CAP SCREW FOR M8X1.25 FOR FUEL PUMP (BSII)	2	
14	E50000506	STUD M8X1.25X34	6	
15	E53011748	COVER PTO	1	

12

Print Date: 27-Mar-2022

PLATE-7

PRESSURE RELIEF VALVE, SPIN ON OIL FILTER & PETROL FILTER

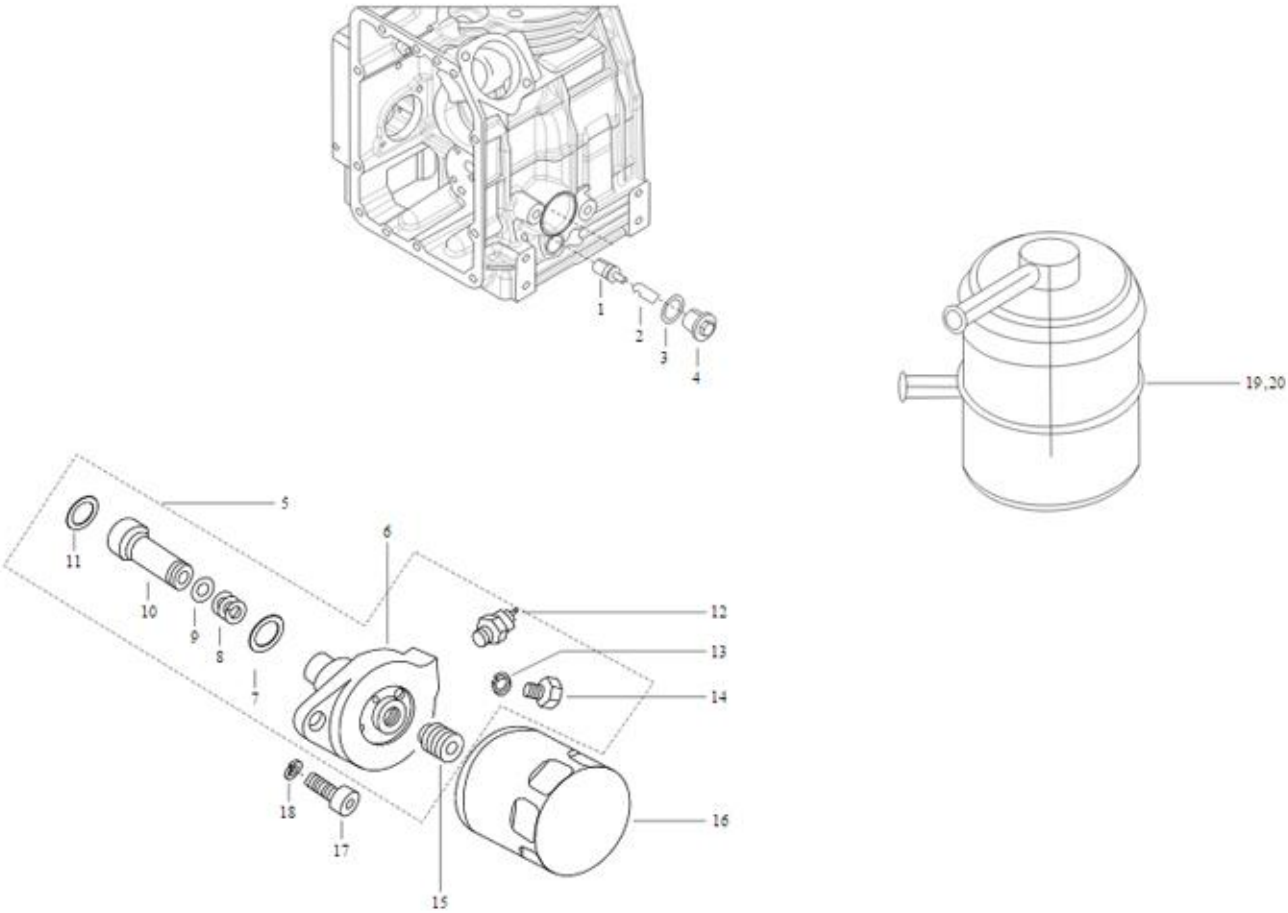
1
2
3
4
19,20
5
6
11
10
9
8
7
12
13
14
18
17
16
15

13

Print Date: 27-Mar-2022

PLATE-7

PRESSURE RELIEF VALVE, SPIN ON OIL FILTER & PETROL FILTER

Fig. No.	Part No.	Description	Qty	Remarks
1	E5609680013	RELIEF VALVE BODY	1	
2	E500575549	SPRING	1	
3	E200467021	JOINT	1	
4	E50000475	PLUG RELIEF VALVE	1	
5	E40008874	FLANGE ASSY FOR SPIN-ON FILTER	1	CONSISTING OF 6 TO 15
6	E40008873	FLANGE	1	
7	E260120016	O RING	1	
8	E50005625006	SPRING	1	
9	E904120213	O RING	1	
10	E50006495029	PISTON	1	
11	E50001213143	O RING LUB OIL FILTER	1	
12	ED41447	OIL PRESSURE SWITCH - PARALLEL THREAD	1	
13	E200467003	JOINT	2	
14	E1177001	BOLT	1	
15	ED41208	STUD	1	
16	ED42244	SPIN ON LUB OIL FILTER	1	
17	E260973027	CAP SCREW M8X 1.25	2	
18	E50000613	MACHINED WASHER 16X8.1X2	1	
19	E40008724	PETROL FILTER	1	
20	ED32619	PETROL FILTER	1	

14

Print Date: 27-Mar-2022

PLATE-8

LUB OIL & GOVERNOR GEAR

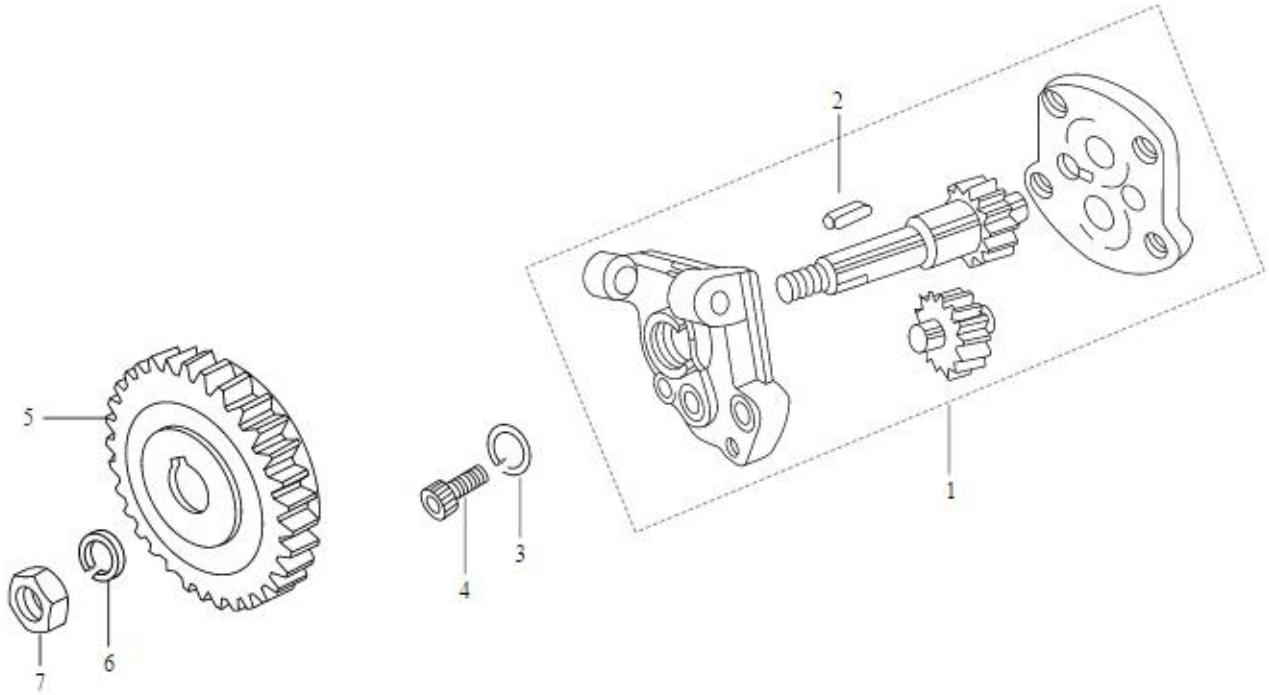
2
5
1
3
4
6
7

15

Print Date: 27-Mar-2022

PLATE-8

LUB OIL & GOVERNOR GEAR

Fig. No.	Part No.	Description	Qty	Remarks
1	E52006709	LUB OIL PUMP ASSY.	1	
2	E500220013	KEY	1	
3	E250755504	SPRING WASHER FOR M6	4	
4	E50000437	HEX SOCKET HEAD SCREW	4	
5	E40009683	GEAR LUB. OIL PUMP	1	
6	E202756511	SPRING WASHER FOR M10	1	
7	E500324066	NUT	1	

16

Print Date: 27-Mar-2022

PLATE-9

CAM SHAFT, PUSH ROD & ROCKER ARM

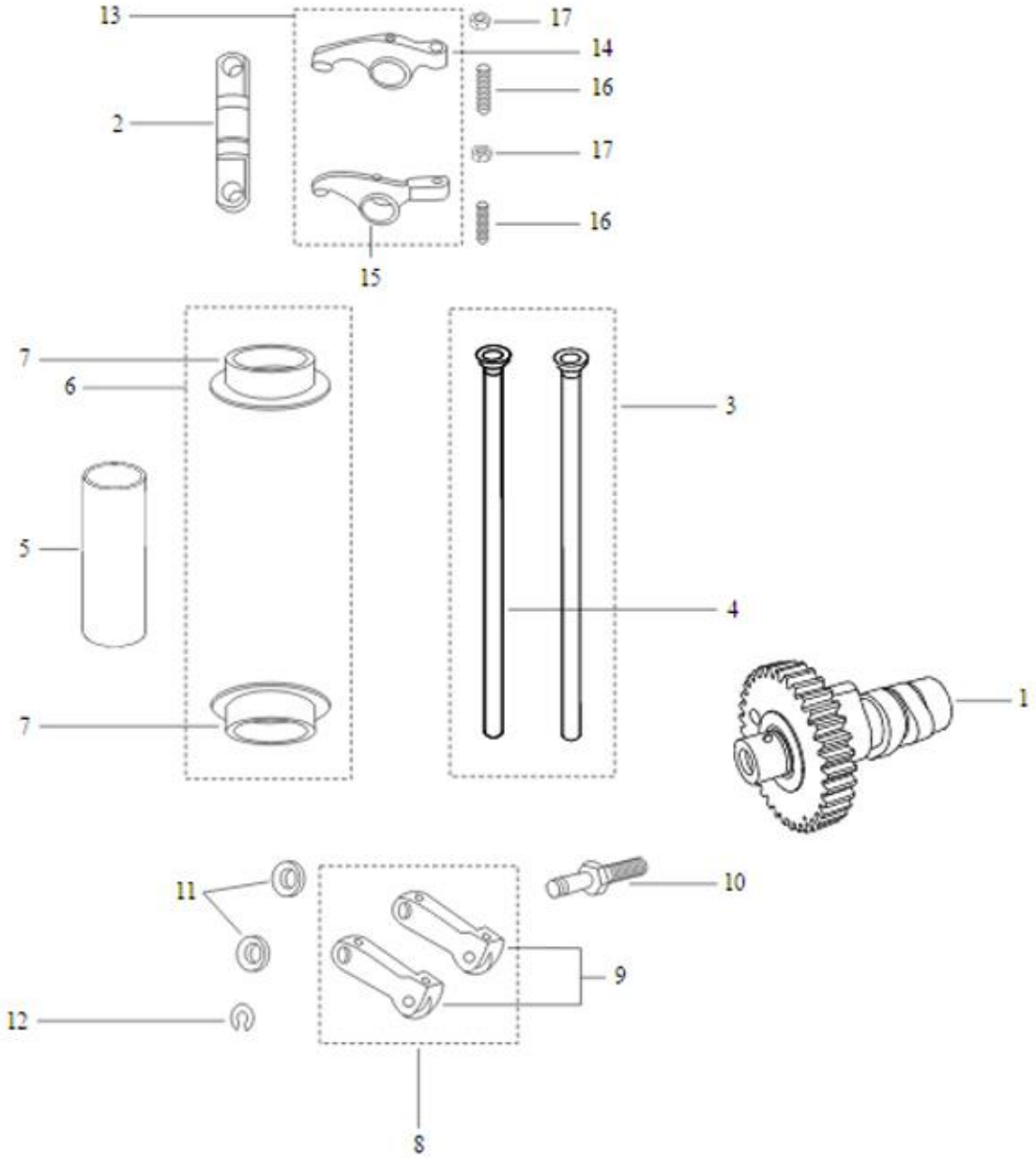
13
17
14
16
2
17
16
15
7
6
3
5
4
7
1
11
10
9
12
8

17

Print Date: 27-Mar-2022

PLATE-9

CAM SHAFT, PUSH ROD & ROCKER ARM

Fig. No.	Part No.	Description	Qty	Remarks
1	E400060112	CAM SHAFT (BSII)	1	Common for BSII & BSIII
2	E5406045038	ROCKER FULCRUM	1	
3	E50007334	SET OF PUSHES	1	
4	E500141016	PUSH ROD	2	
5	E5009520029	PUSH ROD TUBE	1	
6	E50016170	SET OF RUBBER SLEEVES	1	
7	E40006428	JOINT PUSH ROD SLEEVE (G400AG)	2	
8	ED43409	CAM FOLLOWER KIT	1	
9	E5005271054	CAM FOLLOWER LEVER	2	
10	ED30956	PIN LH THREAD	1	
11	E500755006	DISTANCE PIECE	2	
12	E47124004	CIRCLIP	1	
13	E40015121	ROCKER LEVER SET CONSISTING OF SR. NO. 16 & 17	1	
14	E43502707	ROCKER LEVER - INLET	1	Not servciable
15	E43502709	ROCKER LEVER - EXHAUST	1	
16	E500985048	ADJUSTING SCREW	2	
17	E105324008	NUT HEX -OIL SEPARATOR MOUNTING	2	

18

Print Date: 27-Mar-2022

PLATE-10

AIR SHROUD / FLYWHEEL / ELECTRIC START SYSTEM

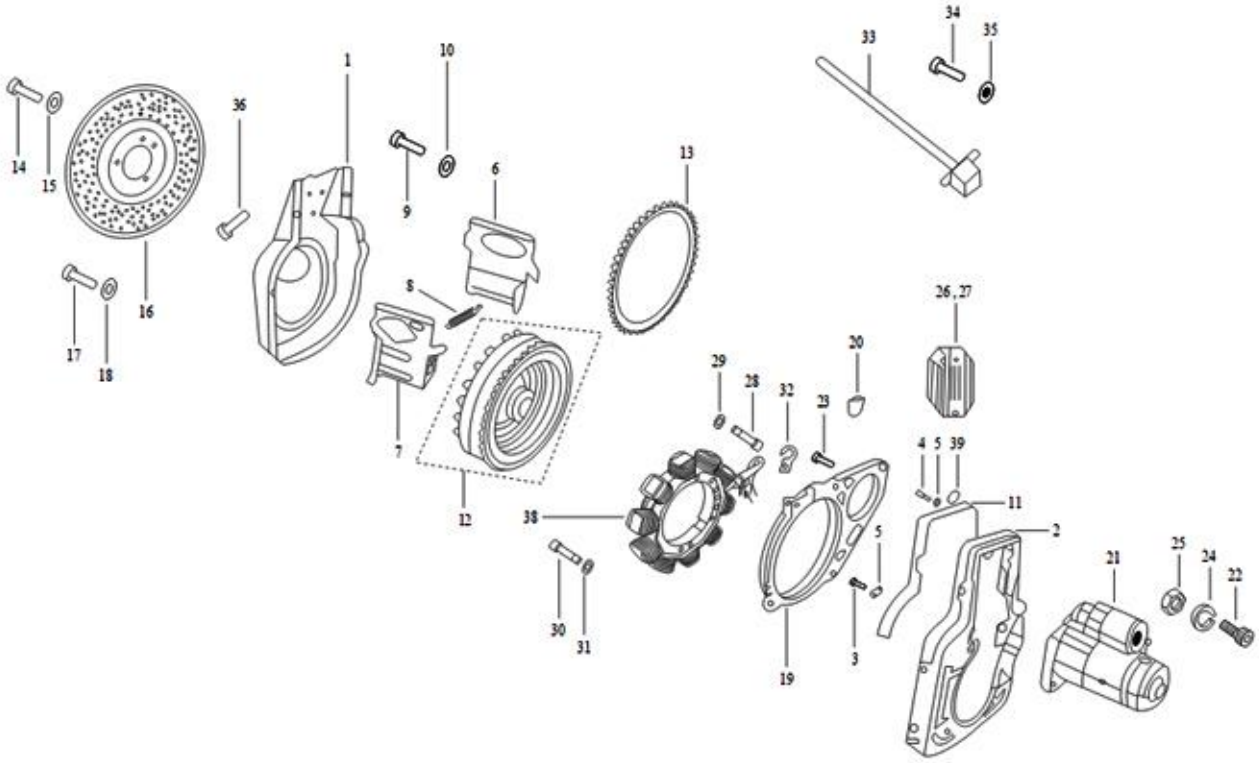
1
2
3
4
5
6
7
8
9
10
11
12
13
14
15
16
17
18
19
20
21
22
23
24
25
26,27
28
29
30
31
32
33
34
35
36
38
39

19

Print Date: 27-Mar-2022

PLATE-10

AIR SHROUD / FLYWHEEL / ELECTRIC START SYSTEM

Fig. No.	Part No.	Description	Qty	Remarks
1	E40001793	AIR SHROUD	1	
2	E40001792	BACK PLATE	1	
3	E9177006	BOLT M8X1.25X25	4	
4	E1177001	BOLT	2	
5	E1756507	SPRING WASHER M8	4	
6	E43502754	AIR BAFFLE -INTAKE SIDE	1	
7	E43502755	AIR BAFFLE -EXHAUST SIDE	1	
8	E5405725043	SPRING AIR BAFFLE	1	
9	E90979037	PHILIPS SCREW	8	
10	E1756504	SPRING WASHER M6- OIL SEPARATOR 2	2	
11	E50006404	JOINT	1	
12	E40005461	FLY WHEEL MOUNTED ALTERNATOR	1	
13	E40009648	RING GEAR STARTER 0.7 KW (INEL FMA)	1	
14	E52200434	SCREW HEX. HEAD M14X1.5X35 LH THREAD FLYWHEEL FIXING	1	
15	E97626043	PLAIN WASHER FLYWHEEL	1	
16	E40019528	GUARD PLATE	1	
17	E50000164	BOLT	4	
18	E260756505	SPRING WASHER (FOR SHEET METAL PULLEY)	4	
19	E40001797	STARTER MOUNTING PLATE	1	
20	E40005592	BUSH FOR FMA CABLE	1	
21	F000CD0301	CDS STARTER MOTOR	1	
22	E47177007	SCREW M8X1.25X30	2	
23	E9177006	BOLT M8X1.25X25	4	
24	E1756507	SPRING WASHER M8	2	
25	E45762512	PLAIN WASHER	2	
26	ED23790	RECTIFIER & REGULATOR	1	
27	ED33204	REGULATOR	1	
28	E50000437	HEX SOCKET HEAD SCREW	4	
29	E250755504	SPRING WASHER FOR M6	4	
30	E40020135	BOLTS FOR FMA STARTOR	4	
31	E26756503	SPRING WASHER	4	
32	E6193361721	CLAMP	1	
33	E40015418	PULSER COIL WITH DUST SEAL	1	
34	E264973008	CAP SCREW	2	
35	ESK5700	SPRING WASHER	2	

20

Print Date: 27-Mar-2022

PLATE-10

AIR SHROUD / FLYWHEEL / ELECTRIC START SYSTEM

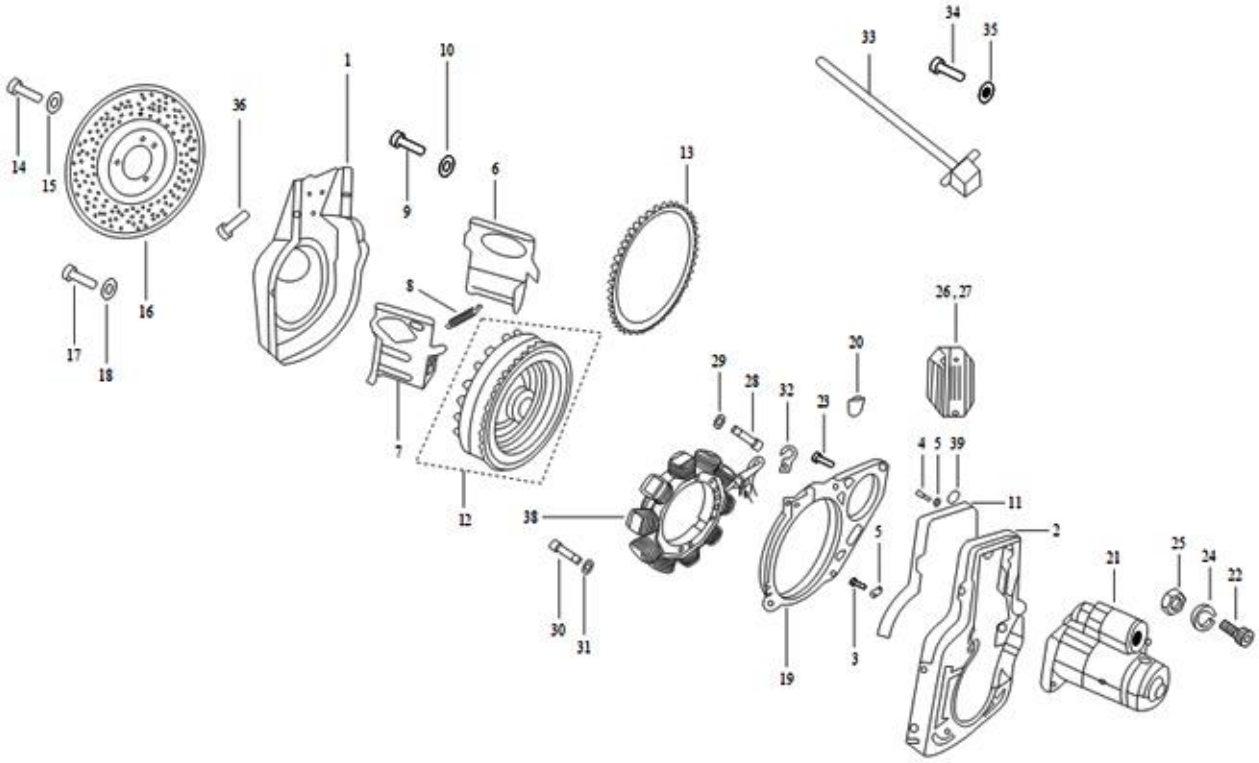
1
2
3
4
5
6
7
8
9
10
11
12
13
14
15
16
17
18
19
20
21
22
23
24
25
26,27
28
29
30
31
32
33
34
35
36
38
39

21

Print Date: 27-Mar-2022

PLATE-10

AIR SHROUD / FLYWHEEL / ELECTRIC START SYSTEM

Fig. No.	Part No.	Description	Qty	Remarks
36	E90979039	SCREW	2	
37	E40005497	STATOR ASSEMBLY WITH PICKUP COIL	1	
38	E40015401	STATOR ASSEMBLY	1	
39	E45762512	PLAIN WASHER	2	

22

Print Date: 27-Mar-2022

PLATE-11

AIR CLEANER, EXHAUST MUFFLER

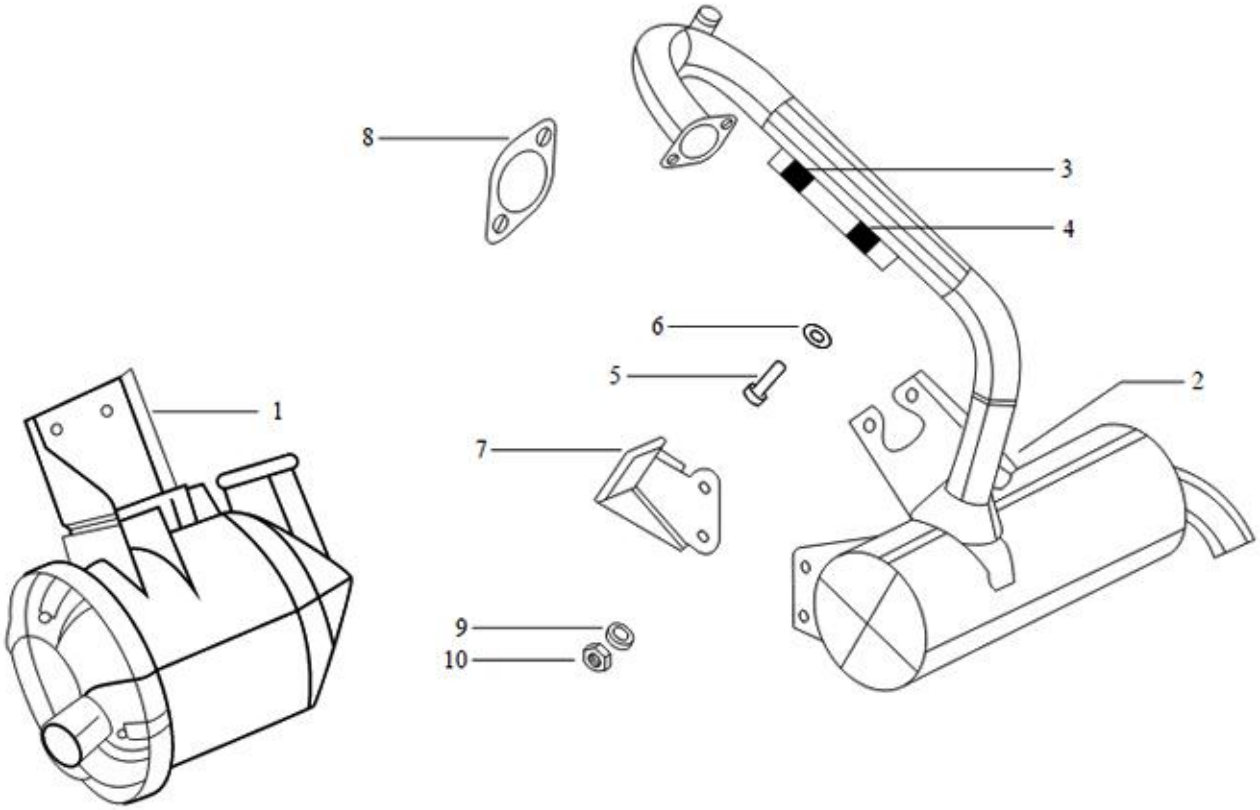
8
3
4
6
5
2
1
7
9
10

23

Print Date: 27-Mar-2022

PLATE-11

AIR CLEANER, EXHAUST MUFFLER

Fig. No.	Part No.	Description	Qty	Remarks
1	E40018632	AIR CLEANER ASSY. WITH BRACKET (CNG)	1	
1	E40018625	AIR FILTER ASSYPLASTIC MODIFIED SEALING	1	
1	E40018626	AIR FILTER ASSY.	1	
1	B077441	AIR FILTER MOUNTING ASSLY. COMPLETE	1	BSIV-CNG
1	B077448	AIR FILTER MOUNTING ASSLY. COMPLETE	1	BSIV-LPG
2	E40017748	EXHAUST MUFFLER (WITH CAT CON) PVPL	1	
2	E40007754	EXHAUST MUFFLER (WITHOUT CAT CON) PVPL	1	
2	B077455	EXHAUST MUFFLER ASSLY. CNG	1	BSIV-CNG
2	B077454	EXHAUST MUFFLER ASSLY. LPG	1	BSIV-LPG
3	ED33740	HEAT SHIELD	1	
4	ED43739	SUPPORT HEAT SHIELD	1	
5	E90979039	SCREW	2	
6	E1756504	SPRING WASHER M6- OIL SEPARATOR 2	2	
7	ED41100	BRACKET EXHAUST MUFFLER	1	
8	ED33758	EXHAUST GASKET	1	
9	E1756507	SPRING WASHER M8	2	
10	E3324019	NUT	2	
11	920102	ELEMENT FOR AIR CLEANER	1	NS

24

Print Date: 27-Mar-2022

PLATE-12

CARBURETTOR, OIL COOLER & ELECTRONIC FEED PUMP

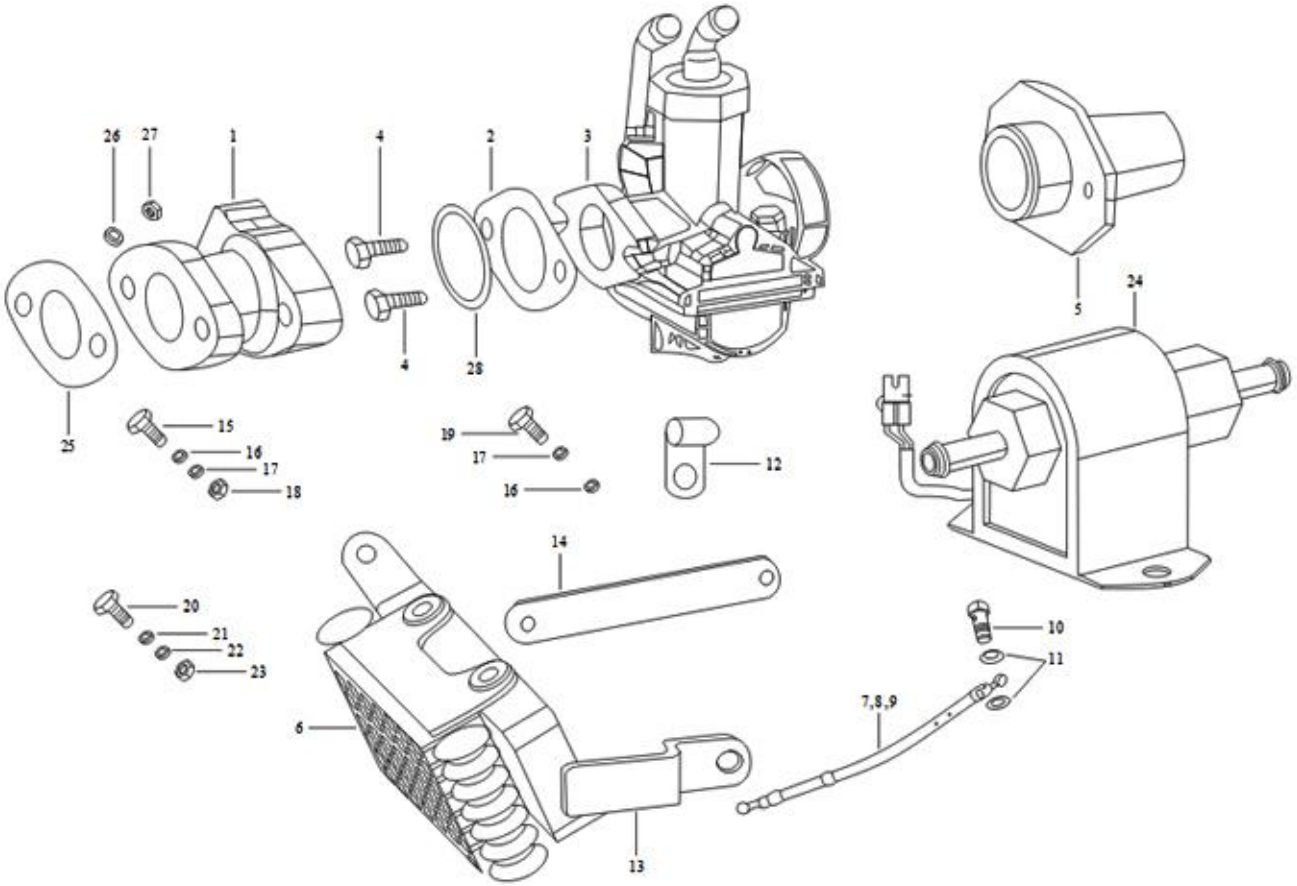
26
27
1
4
2
3
4
28
25
15
16
17
18
19
17
16
12
5
24
14
20
21
22
23
6
10
11
7,8,9
13

25

Print Date: 27-Mar-2022

PLATE-12

CARBURETTOR, OIL COOLER & ELECTRONIC FEED PUMP

Fig. No.	Part No.	Description	Qty	Remarks
1	E40010831	ADAPTOR FOR CARBURETTOR	1	
2	E40006482	INSULATOR	1	
3	E40006847	CARBURETTOR	1	
4	E07502809	BOLTS	2	
5	ED33683	INTAKE AIR REDUCER	1	
6	ED23628	OIL COOLER	1	
7	ED33594	LUB. OIL PIPE FOR OIL COOLER	2	
8	E40027143	LUB. OIL PIPE FOR OIL COOLER	2	
9	E40027155	LUB. OIL PIPE FOR OIL COOLER	1	
10	E91901030	BANJO BOLT - FEED PUMP	4	
11	E283467036	JOINT	8	
12	E6193361720	CLAMP FOR OIL COOLER	2	
13	E40020639	BRACKET FOR OIL COOLER	1	
14	E40020638	SUPPORT FOR OIL COOLER	1	
15	E11770004	HEX. BOLT M8X1.25X20	1	
16	E50000613	MACHINED WASHER 16X8.1X2	3	
17	E1756507	SPRING WASHER M8	3	
18	E9324018	NUT M8 X 1.25 X 6.5	1	
19	E202177002	SCREW FOR STARTER PLATE	1	
20	E276176034	BOLT M6X1X25	4	
21	ED42406	PLAIN WASHER	8	
22	E1756504	SPRING WASHER M6- OIL SEPARATOR 2	4	
23	E105324008	NUT HEX -OIL SEPARATOR MOUNTING	4	
24	ED33733	GASOLINE FEED PUMP	1	
25	E500450092	JOINT INTAKE FLANGE AIR INTAKE	1	
26	E1756507	SPRING WASHER M8	2	
27	E9324018	NUT M8 X 1.25 X 6.5	2	
28	E40006215	O RING INSULATOR	1	
29	ED23672	CABLE GUIDE	2	
30	ED43673	CABLE JUNCTION	2	

26

Print Date: 27-Mar-2022

PLATE-13

IGNITION SYSTEM & SPARK PLUG

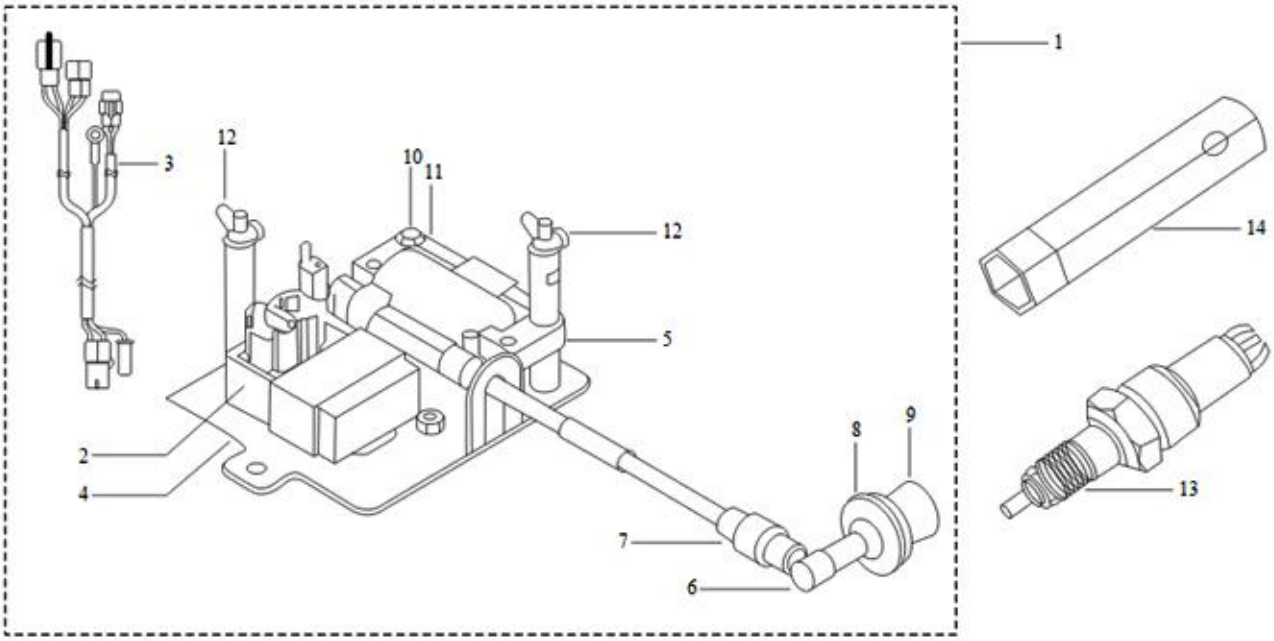
1
3
12
10
11
12
14
5
2
4
8
9
13
7
6

27

Print Date: 27-Mar-2022

PLATE-13

IGNITION SYSTEM & SPARK PLUG

Fig. No.	Part No.	Description	Qty	Remarks
1	E40005495	IGNITION SYSTEM PLATE ASSY.	1	
2	E40005498	TCI UNIT WITH DAMPER	1	
3	E40005469	WIRING HARNESS	1	
4	E40015407	MOUNTING PLATE	1	
5	E40015404	H T COIL	1	
6	ED23685	CAP SPARK PLUG	1	
7	E07515517	GROMET SPARK PLUG CABLE	1	
8	ED43686	SEAL SPART PLUG	1	
9	ED43687	SEAL SPART PLUG CAP	1	
10	E40020133	FLANGE BOLT	1	
11	E26756503	SPRING WASHER	1	
12	E07502811	COLLAR NUT M6 X 1	2	
13	E40024008	SPARK PLUG (BOSCH-WR7DDC4)	1	
14	ED32624	SPARK PLUG SPANNER	1	
15	E40015409	IGNITION SYSTEM ASSY. WITH COVER	1	
16	E40015408	COVER IGNITION SYSTEM	1	

28

Print Date: 27-Mar-2022

PLATE-15

ENGINE SIDE COVER AND MAIN HOUSING

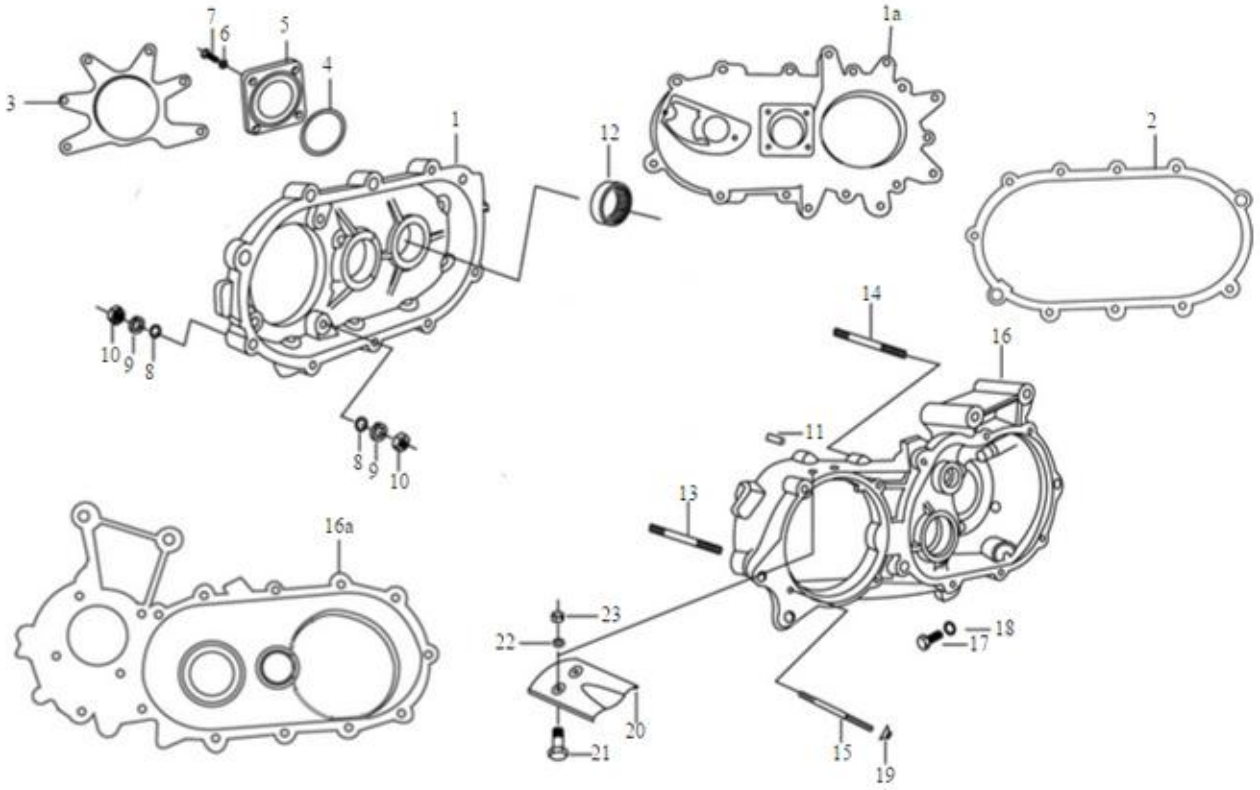
7
6
5
4
3
1
12
1a
2
14
16
10
9
8
11
13
16a
23
22
17
18
20
21
15
19

29

Print Date: 27-Mar-2022

PLATE-15

ENGINE SIDE COVER AND MAIN HOUSING

Fig. No.	Part No.	Description	Qty	Remarks
1	127171310	ENGINE SIDE COVER (EXT.MTG)	1	
1A	BS4 1A010093	GEAR BOX COVER_BS4	1	
2	B001844	GASKET ENGINE SIDE COVER	1	
3	B001501	GASKET PTO COVER & ENGINE SIDE COVER	1	
4	825420215	O RING - COVER PLATE	1	
5	520221019R	COVER PLATE (E/SIDE COVER)	1	
6	807000647	CONICAL LOCK WASHER M6	4	Not Applicable
7	812061656	CSK PHILIPS HEAD SCREW M6 X 16	4	
8	808000826	PLAIN WASHER M8	11	
9	016408	SPRING WASHER	11	
10	15335	HEX HD NUT M8	11	
11	127102010	HOLLOW DOWEL (G. BOX ESC)	2	
12	120212012	NEEDLE BUSH	1	
13	B042798	FLANGED HEXAGONAL HEAD SCREW M8X45	2	
13	B042798	FLANGED HEXAGONAL HEAD SCREW M8X45	8	
14	B042799	FLANGED HEXAGONAL HEAD SCREW M8X40	9	
14	B042799	FLANGED HEXAGONAL HEAD SCREW M8X40	8	
15	815064025	STUD M6 X 40	4	
16	1A010094	MAIN HOUSING	1	Old
16	1A016604	MAIN HOUSING	1	New aluminiun clutch
17	811081025	HEX HEAD SCREW M8 X 10 (DRAIN PLUG)	1	
18	120271018	FIBER WASHER DRAIN PLUG	1	
19	659842	NUT WITH CONICAL WASHER M8 X 1.25P	6	
20	127911019	OIL DEFLECTOR CLUTCH	1	
21	567741	HEX HEAD SCREW M5 X 18 (811051824)	2	
22	127912013	FIBER WASHER OIL DEFLECTOR	2	
23	12136	NUT / NYLOCK NUT M5	2	
24	B002322	GEAR BOX EXTERNAL MTG.(W/O CLUTCH ASSLY) PICK UP	1	
24	B002320	GEAR BOX EXT(W/O CLUTCH ASSLY) PASSENGER	1	

30

Print Date: 27-Mar-2022

PLATE-16

MAINSHAFT, SPEED GEARS AND CLUSTER GEAR

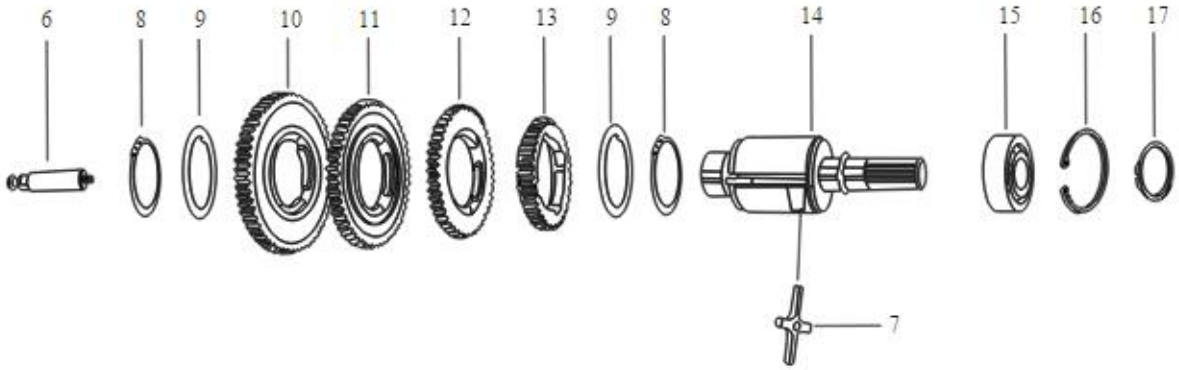
6
8
9
10
11
12
13
9
8
14
15
16
17
7

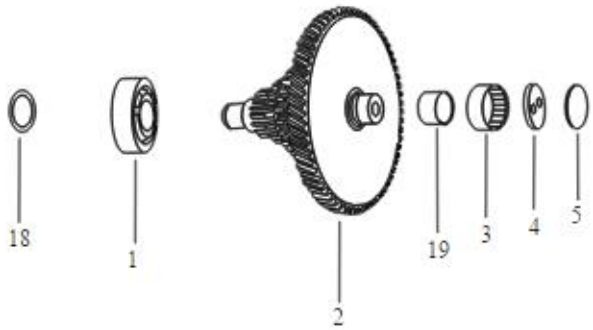
18
1
2
19
3
4
5

31

Print Date: 27-Mar-2022

PLATE-16

MAINSHAFT, SPEED GEARS AND CLUSTER GEAR

Fig. No.	Part No.	Description	Qty	Remarks
1	30209R	BALL BEARING FRONT WHEEL HUB	1	
2	127203010R	CLUSTER GEAR	1	
3	884222808	NEEDLE BUSH 22X28X12	1	
4	120204015R	WASHER (ALT)	1	
5	120205019	SHIM HARD BUSH	1	
6	523021018	STEM GEAR OPERATING	1	
7	B003924	CROSS	1	
8	842004808	CIRCLIP DIA.48 (EXT)	2	
9	523011013R	SHOULDER RING	2	
9	523012017	SHOULDER RING 1.7 MM THK	1	
9	523014015	SHOULDER RING 2.0MM THK	1	
10	127309515R	SPEED GEAR 1ST	1	
11	127302517R	SPEED GEAR 2ND	1	
12	127303016R	SPEED GEAR 3RD	1	
13	127306513R	SPEED GEAR 4TH	1	
14	127451019R	MAIN SHAFT	1	
15	880255211R	DEEP GROOVE BALL BEARING 25X52X15	1	
16	841005207	CIRCLIP DIA 52 (INT)	1	
17	842002501	CIRCLIP DIA 25 (EXT)	1	
18	842001507	CIRCLIP DIA 15 (EXT)	1	
19	122032014	INNER RING - CLUSTER GEAR	1	

32

Print Date: 27-Mar-2022

PLATE-17

GEAR SHIFTER AND ITS CONTROL MECHANISM

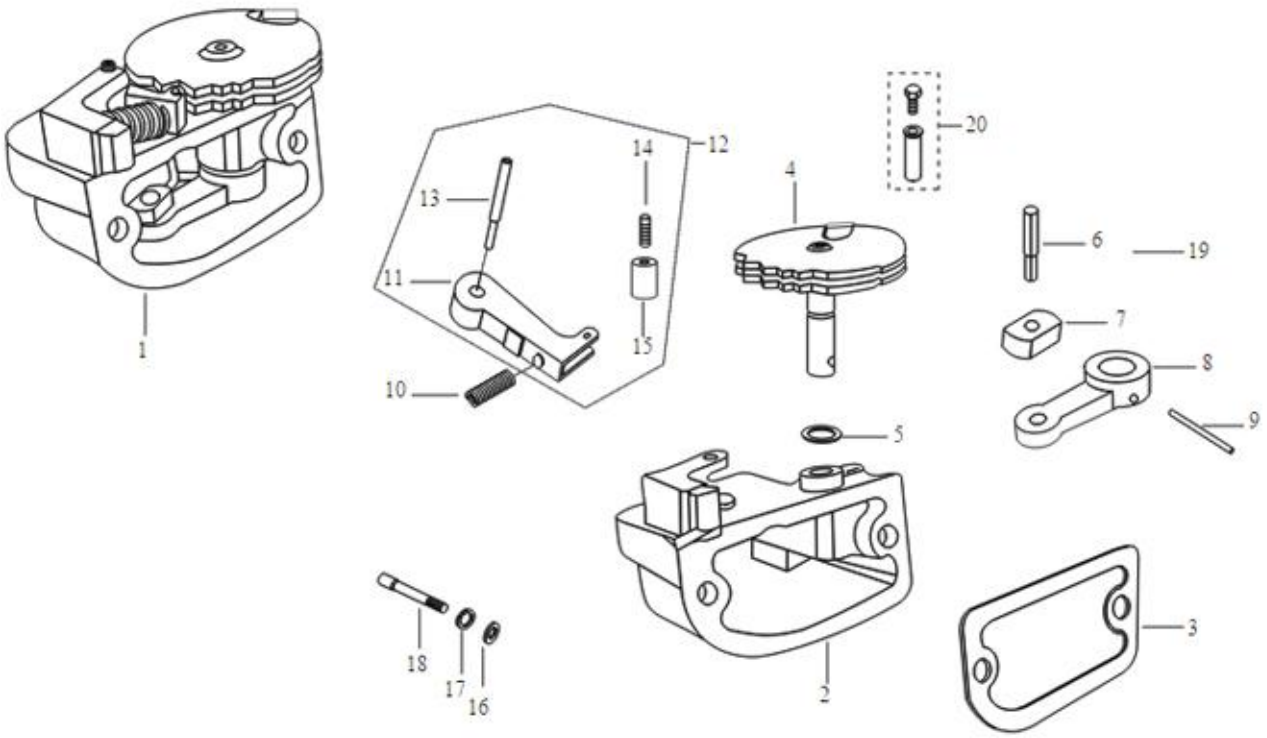
1
2
3
4
5
6
7
8
9
10
11
12
13
14
15
16
17
18
19
20

33

Print Date: 27-Mar-2022

PLATE-17

GEAR SHIFTER AND ITS CONTROL MECHANISM

Fig. No.	Part No.	Description	Qty	Remarks
1	127640012	COMPLETE GEAR SHIFTER HSG ASSLY	1	CONSISTING OF SR.NO. 2;4 TO 10 & 12
2	127641016	GEAR SHIFTER HOUSING	1	
3	128081017	GASKET HOUSING GEAR SHIFTER HOUSING	1	
4	SPB042620	SECTOR AND CONNECTOR PLATE AND LEVER ASSLY.	1	
5	825080209	O - RING - (SECTOR PLATE ASSY.)	1	
6	126022017	PIN FOR SLIDER BLOCK	1	
7	126021013	SLIDER BLOCK	1	
8	SPB042620	SECTOR AND CONNECTOR PLATE AND LEVER ASSLY.	1	
9	126004015	TAPER PIN (FOR LEVER)	1	
10	126003011	SPRING GEAR SHIFTER ASSY.	1	
11	126060019	BRACKET ASSY.	1	
12	SP126050014	BKT. WITH ROLLER ASSLY - SPD	1	
13	126054010	SCREW FOR BRACKET	1	
14	126053016	PIN FOR ROLLER	1	
15	126052012	ROLLER	1	
16	3056	PLAIN WASHER M6 OD12	2	
17	016406	SPRING WASHER	2	
18	B016611	FLANGED HEX. HEAD SCREW M6X45 CL10	2	
19	SPB042620	SECTOR AND CONNECTOR PLATE AND LEVER ASSLY.	1	
20	604560	SCREW TERMINAL ASSY. - GEAR CONTROL	2	
19	122032014	INNER RING - CLUSTER GEAR	1	

34

Print Date: 27-Mar-2022

PLATE-18

DIFFERENTIAL UNIT, FARE METER HOUSING AND SPEEDO DRIVE

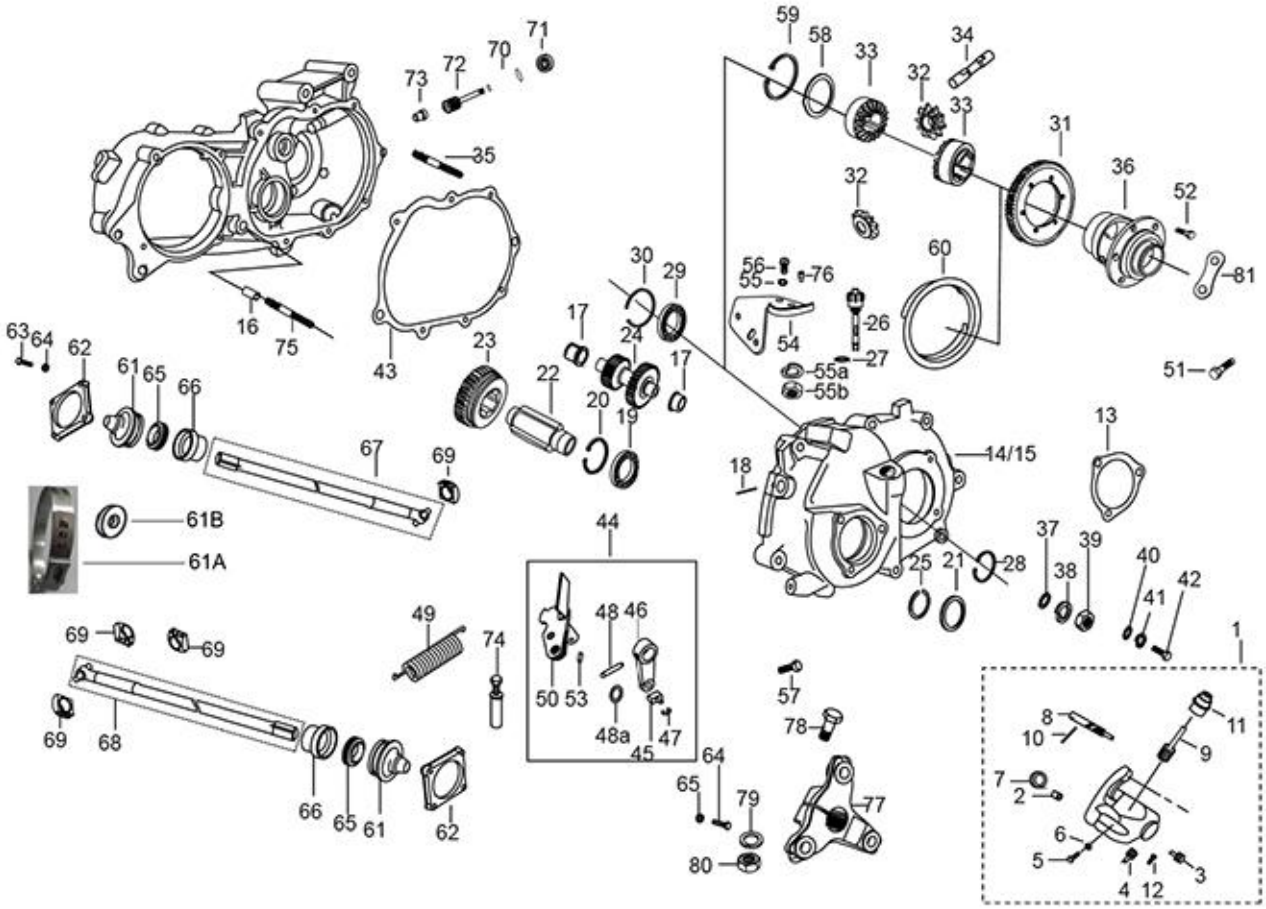
59
58
33
34
32
33
31
36
52
81
71
70
72
73
35
32
60
30
29
56
55
76
26
27
54
55a
55b
51
16
75
43
23
22
17
24
17
20
19
63
64
62
61
65
66
67
69
14/15
13
18
61B
61A
44
37
39
40
42
41
38
25
21
28
49
74
48
46
50
53
48a
47
45
57
78
69
69
69
68
66
65
61
62
64
65
79
77
80
1
8
10
11
9
7
2
6
5
4
12
3

35

Print Date: 27-Mar-2022

PLATE-18

DIFFERENTIAL UNIT, FARE METER HOUSING AND SPEEDO DRIVE

Fig. No.	Part No.	Description	Qty	Remarks
1	1A000817	FAREMETER	1	CONSISTING OF 2,3,4,5,6,7,8,9,10,11,12,13,14
2	124112014	BUSH(10951)	1	
3	125012015	PLUG F.M.HOUSING (40734)	1	
4	165121014	PIN	1	
5	811051525	SCREW (HEX HEAD M5 X 15)	1	
6	20105	PLAIN NUT M5	1	
7	B018991	PLUG FOR FAREMETER	1	
8	124121015	FARE METER PINION	1	
9	124102019	FARE METER GEAR	1	
10	822031942	SPRING PIN 3 X 19	1	
11	124141015R	ADOPTER NYLON (VE)	1	
12	124113018	GREASE NIPPLE (M6)	1	
13	1A000826	GASKET	1	
14	127121016	GEAR BOX COVER	1	
15	BS4 1A010093	GEAR BOX COVER_BS4	1	
16	120203011	HOLLOW DOWEL - GEAR BOX COVER	2	
17	B042486	BUSH	2	
18	822051647	SPRING PIN 5X16	1	
19	880305509R	DEEP GROOVE BALL BEARING 30X55X13	1	
20	841005207	CIRCLIP DIA 52 (INT)	1	
20	841005506	CIRCLIP DIA. 55 (INT)	1	
21	117402	OIL SEAL	1	
21	1A000236	OIL SEAL	1	
22	127501010	SHAFT PINION	1	
22	1A009926	REVERSE SHAFT	1	
23	127404016R	GEAR R.C.	1	
24	127571015R	IDLER GEAR (PAS)	1	
25	842002501	CIRCLIP DIA 25 (EXT)	1	
25	842003000	CIRCLIP DIA. 30 (EXT.)	1	
26	112898	OIL LEVEL ARM WITH PLUG	1	Old
26	1A014592	OIL DIPSTICK	1	New aluminiun clutch
27	127016015	DIPSTICK SEALING WASHER	1	
28	6450	EXT CIRCLIP DIA 48	1	
29	7066R	RADIAL BALL BEARING	1	
30	111353	CIRCLIP	1	

36

Print Date: 27-Mar-2022

PLATE-18

DIFFERENTIAL UNIT, FARE METER HOUSING AND SPEEDO DRIVE

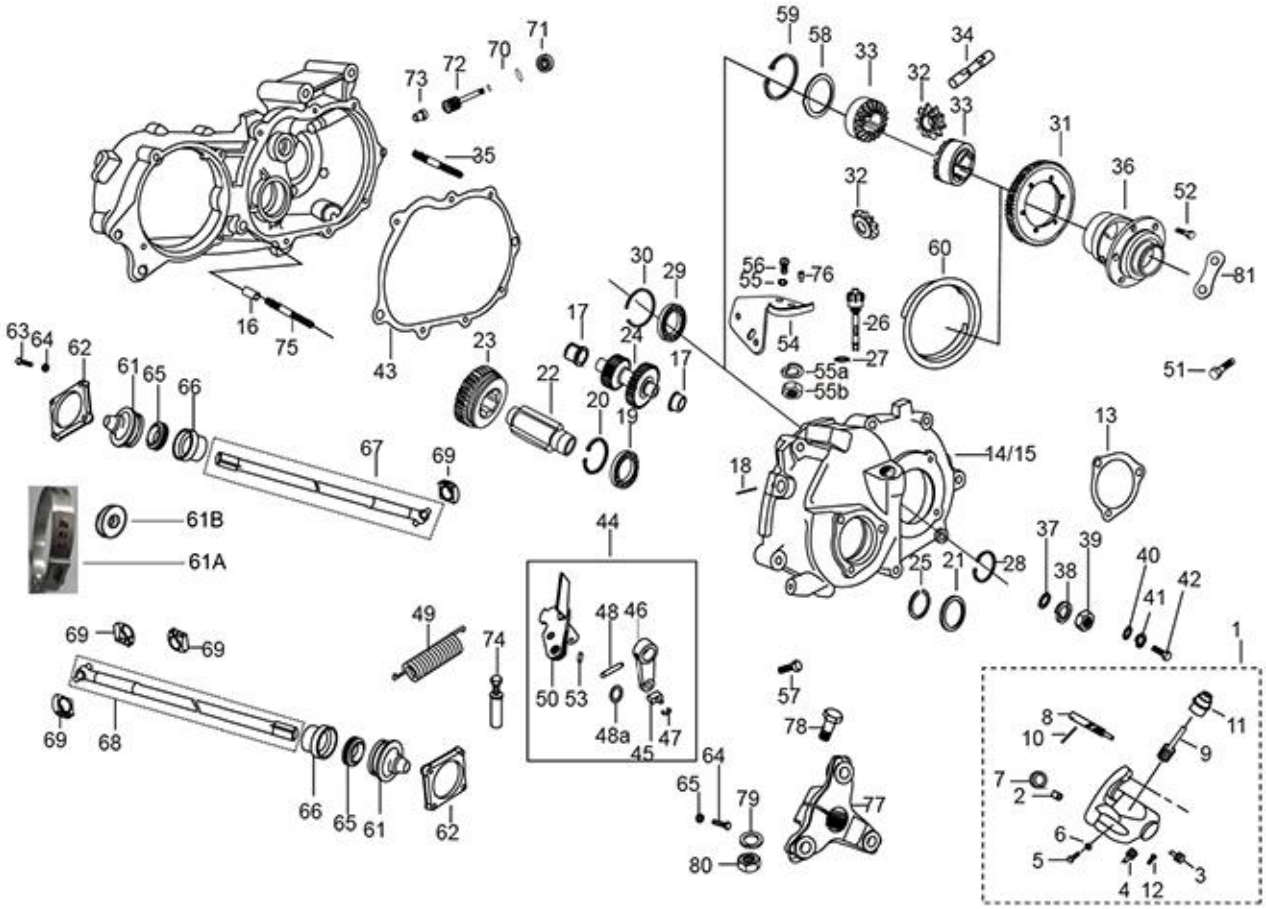
59
58
33
34
32
33
31
36
52
81
71
70
72
73
35
32
60
30
29
56
55
76
26
27
54
55a
55b
51
16
75
43
23
22
17
24
17
20
19
63
64
62
61
65
66
67
69
14/15
13
18
61B
61A
44
37
39
40
41
42
38
25
21
28
49
48
46
74
50
53
48a
47
45
57
78
69
69
69
68
66
65
61
62
64
65
79
77
80
1
8
10
11
9
7
2
6
5
4
12
3

37

Print Date: 27-Mar-2022

PLATE-18

DIFFERENTIAL UNIT, FARE METER HOUSING AND SPEEDO DRIVE

Fig. No.	Part No.	Description	Qty	Remarks
30A	016406	SPRING WASHER	1	
31	127555016	GEAR FINAL DRIVE (PASS)	1	
31	1A011810	DIFFERENTIAL CROWN (PASS.)	1	Applicable 15th Mar-19 onwards
32	NS-	NOT SERVICEABLE PART	2	Serviceable as Kit - 940028
33	NS-	NOT SERVICEABLE PART	2	Serviceable as Kit - 940028
34	132129	PIN	1	
35	B042798	FLANGED HEXAGONAL HEAD SCREW M8X45	8	
36	288730	DIFFERENTIAL CAGE	1	
37	808000826	PLAIN WASHER M8	8	
37	808000826	PLAIN WASHER M8	10	
38	016408	SPRING WASHER	8	
38	016408	SPRING WASHER	10	
39	20108	HEX NUT M8	8	
39	15335	HEX HD NUT M8	10	
39	20108	HEX NUT M8	8	
40	3056	PLAIN WASHER M6 OD12	3	
41	016406	SPRING WASHER	3	
42	31088	HEX HD SCREW M6 X 16 CL 8.8 (811061623)	3	
43	127141016	GASKET G. B. COVER	1	
44	SP1A0101404	INVERTER LEVER SECTOR ASSY PASS -SPD	1	
45	120321019	SLIDER BLOCK R.C. GEAR	1	
46	SP1A0101404	INVERTER LEVER SECTOR ASSY PASS -SPD	1	
47	843000500	CIRCLIP DIA.5 (EXT) TYPE C	1	
48	17702	SPRING PIN	1	
48A	1A005176	O- RING	1	
49	127111011	REVERSE GEAR SPRING	1	
50	1A010139	SECTOR PLATE ASSLY COMP	1	For Old Gear Box Cover
51	B075002	COVER PLATE (DIFF. COVER) - VE	1	
52	1A004807	SCREW	6	
53	825080209	O - RING - (SECTOR PLATE ASSY.)	1	
54	128306015	STOPPER PLATE R.C. LEVER	1	
55	016404	SPRING WASHER M4	2	
55A	003054	PLAIN WASHER	2	
55B	20104	HEX NUT M4	2	
56	31088	HEX HD SCREW M6 X 16 CL 8.8 (811061623)	2	

38

Print Date: 27-Mar-2022

PLATE-18

DIFFERENTIAL UNIT, FARE METER HOUSING AND SPEEDO DRIVE

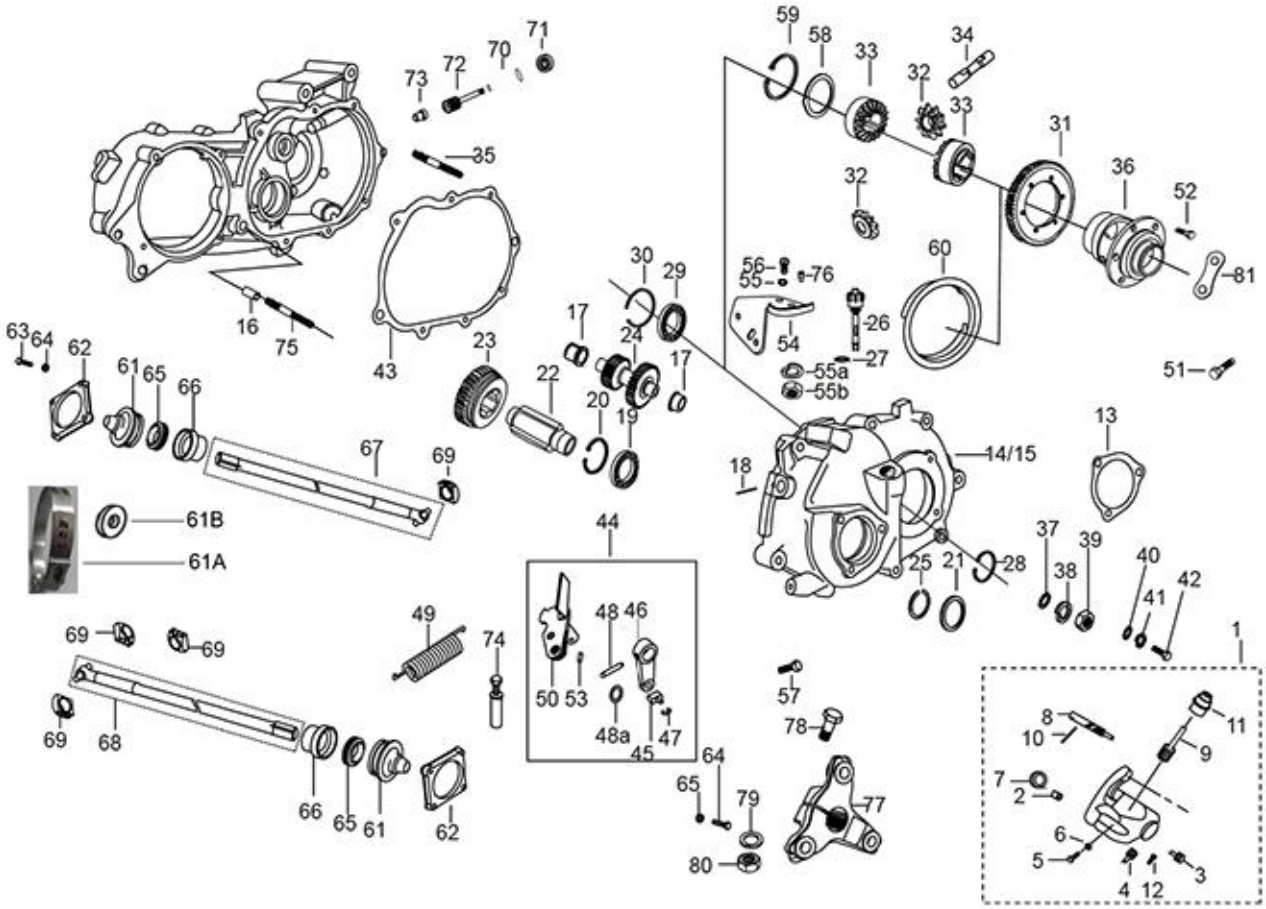
59
58
33
34
32
33
31
36
52
81
71
70
72
73
35
32
60
30
29
56
55
76
26
27
54
55a
55b
51
16
75
43
23
22
17
24
17
20
19
63
64
62
61
65
66
67
69
14/15
13
18
61B
61A
44
37
39
40
42
41
38
25
21
28
49
74
48
46
50
53
48a
47
45
57
78
69
69
69
68
66
65
61
62
64
65
79
77
80
1
8
10
11
9
7
2
6
5
4
12
3

39

Print Date: 27-Mar-2022

PLATE-18

DIFFERENTIAL UNIT, FARE METER HOUSING AND SPEEDO DRIVE

Fig. No.	Part No.	Description	Qty	Remarks
57	128307019	BOLT R.C. SPRING RETAINING	1	
58	220575	WASHER 65X3	1	
59	132134	CIRCLIP	1	
60	132244	STOPPER THK=1.0	1	
60	1A011778	SATELLITE PIN RETAINER	1	Applicable 15th Mar-19 onwards
60A	1A000612	RETAINER SCREW - PRE COATED	2	Applicable 15th Mar-19 onwards
61	6C000016	BELLOW	2	Chassis cut off MBX0003BFXE848267
61A	6C000041	OTIKAR CLAMP FOR BELLOW	2	Chassis cut off MBX0003BFXE848267
61B	3056	PLAIN WASHER M6 OD12	6	Chassis cut off MBX0003BFXE848267
62	111356	COVER	2	
63	31092	HEX. HD SCREW M6X25	8	
64	016406	SPRING WASHER	8	
65	6C000312R	SEAL RING	2	Chassis cut off MBX0003BFXE848267
66	113278	BRACKET RETAINER RING (41736)	2	
67	587687	PROP. SHAFT SUB ASSY. LT (WITH PIN)	1	
68	587685	PROP. SHAFT SUB ASSY. RT (WITH PIN)	1	
69	112867R	SLIDER BLOCK PROP. SHAFT	4	
70	117401	BUSH	1	
71	117402	OIL SEAL	1	
72	117404	SPEEDOMETER GEAR	1	
73	165121014	PIN	1	
74	604560	SCREW TERMINAL ASSY. - GEAR CONTROL	1	
75	127103014	M8 STUD - MAIN HOUSING	2	
76	119278	TERMINAL	1	
77	111498	ELASTIC HUB	1	
78	B024614	HEX HEAD BOLT M10X45 CL 10.9	2	
79	16410	SPRING WASHER	2	
80	231370	SELF BREAKING NUT M10	2	
81	B003155	LOCK PLATE	3	
82	1A004807	SCREW	3	

40

Print Date: 27-Mar-2022

PLATE-19
CLUTCH AND CLUTCH COVER

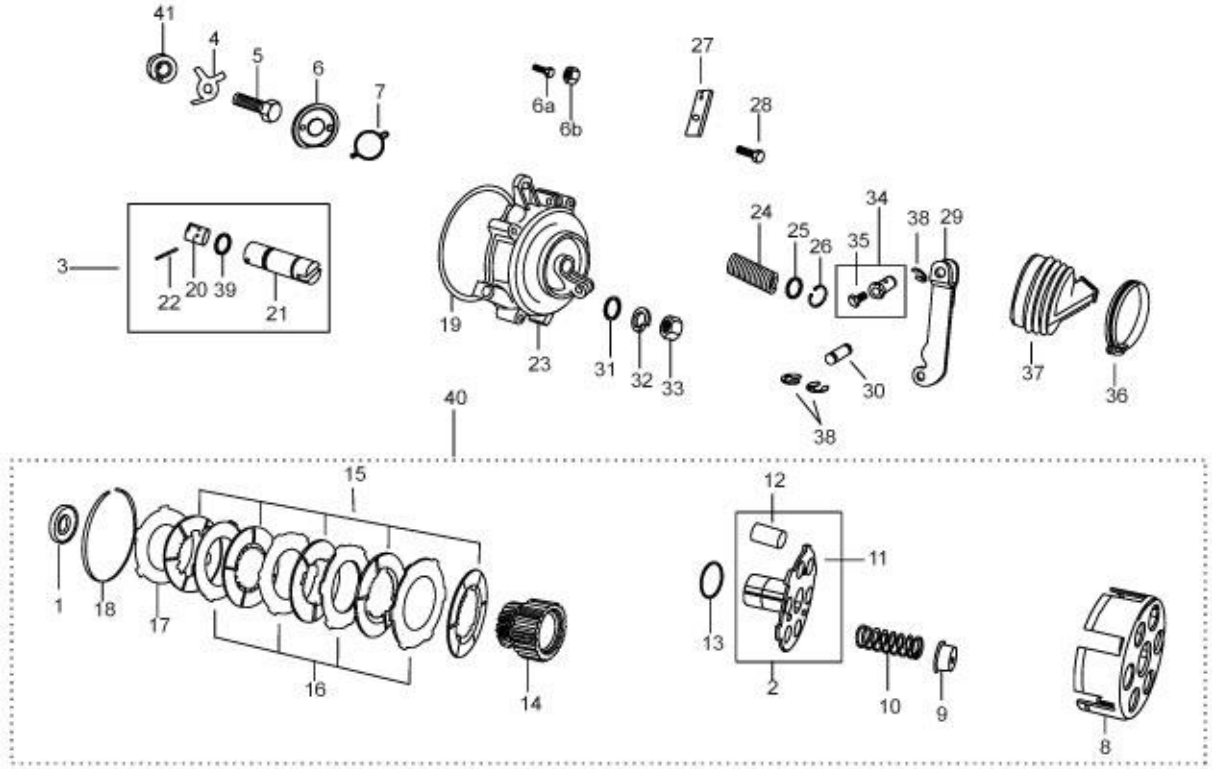
41
4
5
6
7
6a
6b
27
28
3
22
20
39
21
19
23
31
32
33
24
25
26
35
34
38
29
30
38
37
36
40
15
1
18
17
16
14
12
11
13
2
10
9
8

41

Print Date: 27-Mar-2022

PLATE-19
CLUTCH AND CLUTCH COVER

Fig. No.	Part No.	Description	Qty	Remarks
1	652124	SPACER WASHER-CLUTCH	1	
2	1F000755	CLUTCH SHAFT ASSY. (IMPROVED)	1	
3	1A001457	PLUNGER SHAFT	1	
4	129012013	TAB WASHER	1	
5	128307019	BOLT R.C. SPRING RETAINING	1	
6	1A011547R	THRUST BEARING	1	
6A	567741	HEX HEAD SCREW M5 X 18 (811051824)	4	
6B	20106	HEX NUT M6	4	
7	286406	SPRING CLIP	1	
8	1A001455	CLUTCH HOUSING	1	
9	127757011	CUP - CLUTCH SPRING	6	
10	B023890	CLUTCH SPRING	6	
13	127758015	SHIM	1	
14	1F000754	ENGINE GEAR (MANTANO)	1	
15	127530011	DRIVEN PLATE ASLY	5	
16	127692015	DRIVING PLATE THK. 2.0 MM	4	
17	127693019	PRESSURE PLATE OUTER (VE)	1	
18	127754019	CIRCLIP - CLUTCH BOX	1	
19	825123207	O - RING CLUTCH COVER	1	
20	-	NOT SERVICEABLE	1	NS
22	822031942	SPRING PIN 3 X 19	1	
24	127185012	SPRING - CLUTCH COVER	1	
25	120164019	RETAINING PLATE	1	
26	842001600	CIRCLIP DIA.16(EXT)	1	
27	127471019	BRACKET CLUTCH CABLE GUIDE	1	
28	31092	HEX. HD SCREW M6X25	1	
29	127460010	LINK ASSLY - CLUTCH (IMPROVED)	1	
30	127013013	PIN CLUTCH	1	
31	3056	PLAIN WASHER M6 OD12	4	
32	016406	SPRING WASHER	4	
33	20106	HEX NUT M6	4	
34	B024379	SCREW TERMINAL ASSLY-ENGINE STOP,D.C.	1	
35	120238016	BOLT FOR SCREW TERMINAL	1	
36	120170018	HOSE CLIP - CLUTCH COVER BELOW	1	
37	127012019	BELLOW CLUTCH ACTUATING	1	

42

Print Date: 27-Mar-2022

PLATE-19
CLUTCH AND CLUTCH COVER

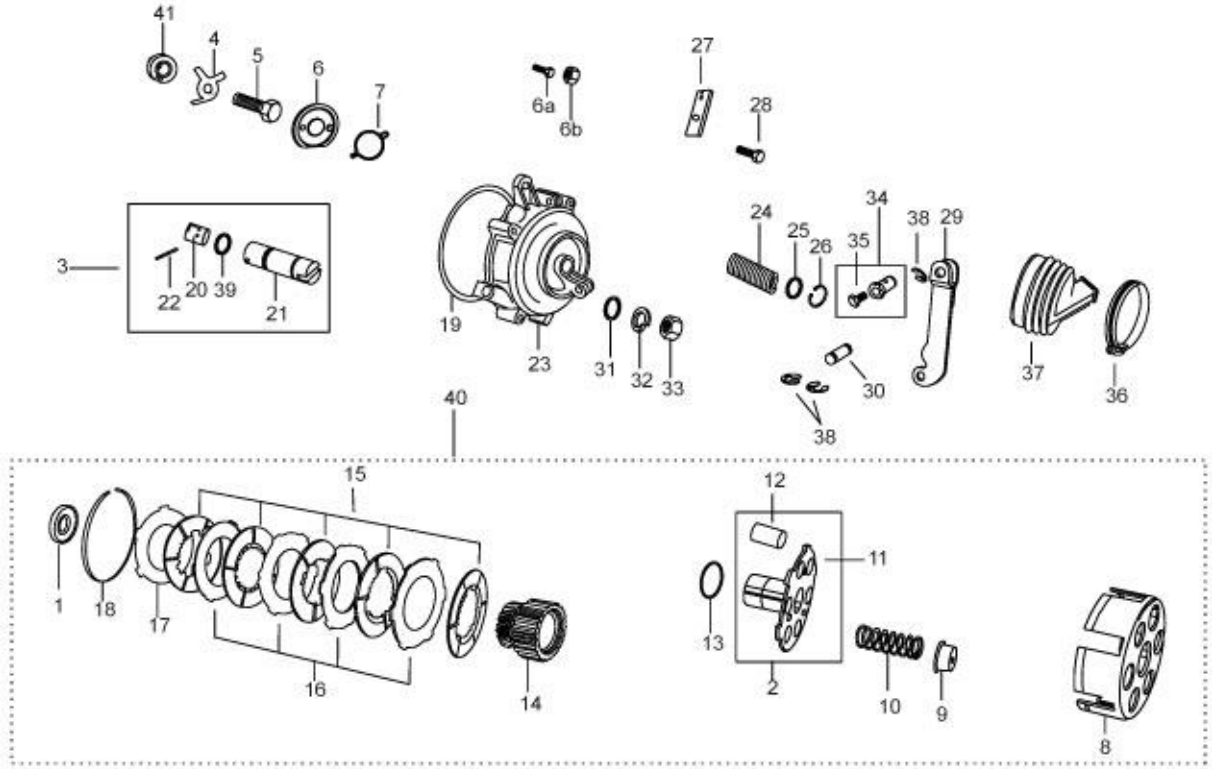
41
4
5
6
7
6a
6b
27
28
3
22
20
39
21
19
23
31
32
33
24
25
26
35
34
38
29
30
38
37
36
40
15
1
18
17
16
14
12
11
13
2
10
9
8

43

Print Date: 27-Mar-2022

PLATE-19

CLUTCH AND CLUTCH COVER

Fig. No.	Part No.	Description	Qty	Remarks
38	843000809	CIRCLIP DIA.8(EXT) TYPE C	3	
39	B019220	O- RING (PLUNGER SHAFT)	1	
40	1F000832	CLUTCH ASSY	1	
41	129011019	WASHER FOR CLUTCH ASSY.	1	

44

Print Date: 27-Mar-2022

PLATE-20
ENGINE SUPPORT

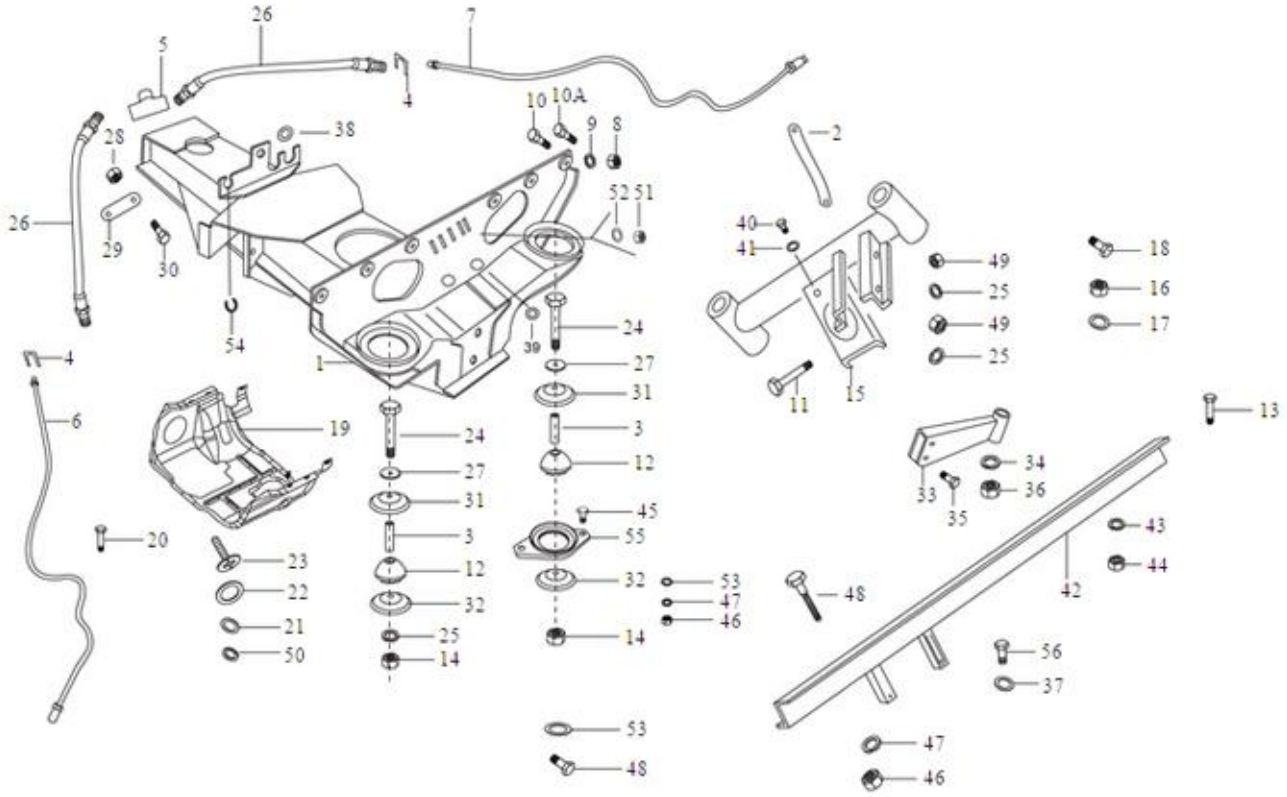
26
7
5
4
10
10A
9
8
38
2
28
52
51
26
29
30
40
41
49
18
25
16
49
17
54
39
24
25
4
1
27
11
15
31
13
6
19
24
3
27
12
34
31
33
36
45
35
20
3
55
43
23
12
32
53
44
22
32
47
48
42
21
46
25
14
50
14
56
37
53
47
48
46

45

Print Date: 27-Mar-2022

PLATE-20
ENGINE SUPPORT

Fig. No.	Part No.	Description	Qty	Remarks
1	6C000382	FRAME ASSLY SUS.& ENGINE SUPPORT	1	common with BS6
2	644839R	EARTHING CABLE	1	
3	267065	SPACER FRONT	3	
4	136916	PLATE FOR RETAINING THE BRAKE FLEX. PIPE	3	
5	643692	THREE WAY UNION	1	
6	644813	BRAKE PUMP TUBE OF LEFT REAR WHEEL	1	
7	644812	BRAKE PUMP TUBE OF RIGHT REAR WHEEL	1	
8	20108	HEX NUT M8	6	
9	016408	SPRING WASHER	6	
10	31119	HEX HD SCREW M8 X 25	6	
10A	632247	HEX HDD SCREW M10X30 CC8.8	2	
11	604948	HEX.HDD BOLT M8 X 110 WITH POINTING	2	
12	265091	DUMPER ENGINE MTG.	3	
13	272178	HEX. HDD BOLT M8 X 122 CL 10.9	1	
14	15335	HEX HD NUT M8	3	
15	643711R	FRT CROSS MEMBER ASSY. ENG. MTG.	1	
16	231370	SELF BREAKING NUT M10	2	
17	286328	PLAIN WASHER 20X10.2X2	2	
18	568689	HEX HEAD BOLT M10X100	2	
19	660927	ENGINE COVER	1	
20	604606	HEX HD. SCREW M5X20 CL8.8	2	
21	3055	PLAIN WASHER M5	3	
22	6078	PLAIN WASHER 12 X 5.2 X 1	3	
23	15911	PAN SELF TAP SCREW 8SG X 16 AB	6	
24	272178	HEX. HDD BOLT M8 X 122 CL 10.9	2	
25	016408	SPRING WASHER	3	
26	644814R	FLEXIBLE BRAKE HOSE	2	
27	2383	PLAIN WASHER M20X8.5X2	4	
28	231370	SELF BREAKING NUT M10	2	
29	632299	PLATE	2	
30	31159	HEX HD SCREW M10 X 35 CC 8.8	2	
31	569377	PLATE	2	
32	569244	PLATE	2	
33	662476	REAR ENGINE SUPPT. ARM ASSLY.	1	
34	16410	SPRING WASHER	2	

46

Print Date: 27-Mar-2022

PLATE-20
ENGINE SUPPORT

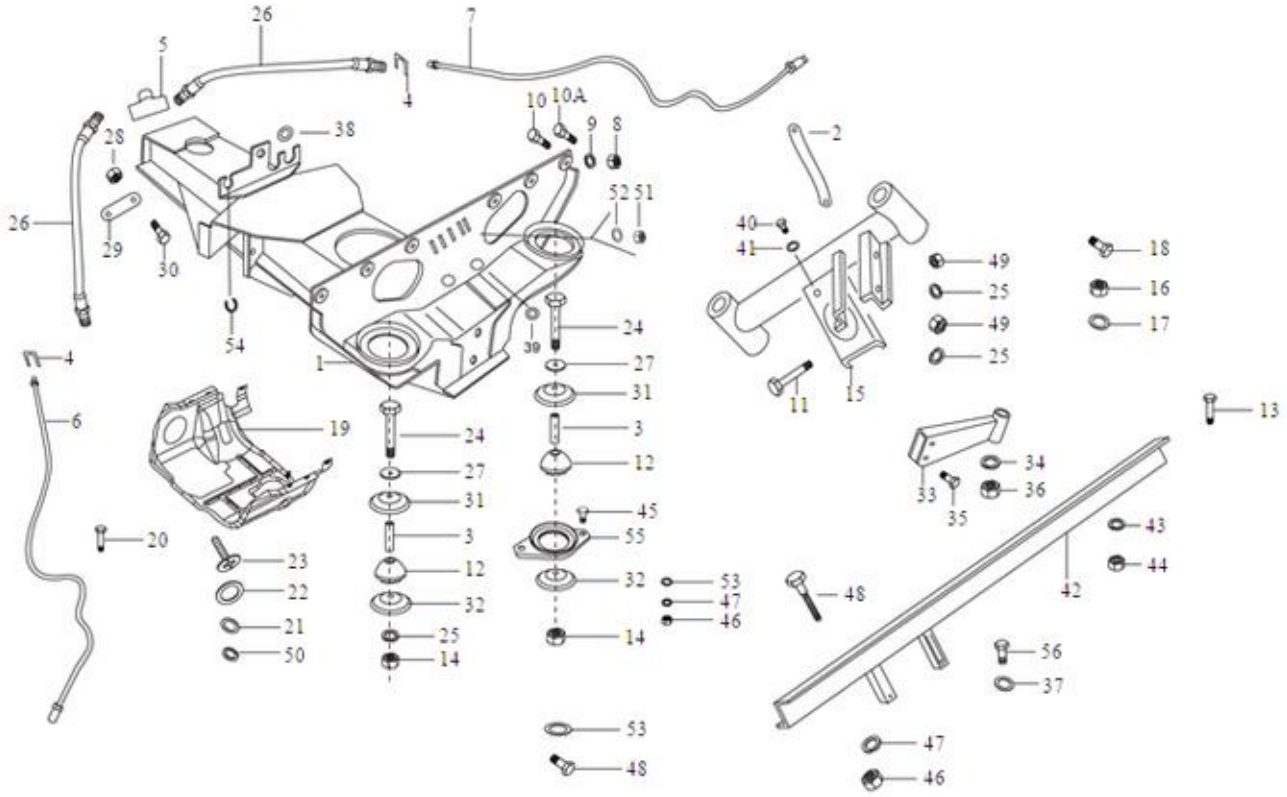
26
7
5
4
10
10A
9
8
38
2
28
52
51
26
29
30
40
41
49
18
25
16
49
17
54
39
24
25
4
1
27
11
15
31
13
6
19
24
3
27
12
34
33
36
31
35
45
43
20
3
55
23
12
32
53
44
22
32
47
48
42
21
25
46
14
50
14
56
37
53
47
48
46

47

Print Date: 27-Mar-2022

PLATE-20
ENGINE SUPPORT

Fig. No.	Part No.	Description	Qty	Remarks
35	B024614	HEX HEAD BOLT M10X45 CL 10.9	2	
36	20110	HEX NUT M10	2	
37	286328	PLAIN WASHER 20X10.2X2	6	
38	178610	GROMMET	1	
39	15478	GROMMET4	2	
40	31116	HEX HD. SCREW M8X16	3	
41	3058	PLAIN WASHER 15X8.4X1.5	1	
42	B009144	CROSS MEMBER ENG. SUPP. RR SUB ASSLY.	1	
43	016408	SPRING WASHER	2	
44	20108	HEX NUT M8	2	
45	31118	SCREW M8X20	2	
46	20108	HEX NUT M8	4	
47	16410	SPRING WASHER	6	
48	568260	HEX HD BOLT M8X160 CL 8.8	2	
49	20110	HEX NUT M10	4	
50	16405	SPRING WASHER M5	2	
51	20105	PLAIN NUT M5	2	
52	3055	PLAIN WASHER M5	2	
52	6078	PLAIN WASHER 12 X 5.2 X 1	2	
53	286328	PLAIN WASHER 20X10.2X2	2	
54	568140	GROMMET	1	

48

Print Date: 27-Mar-2022

PLATE-21

CHASSIS FRAME, FUEL TANK & SEAT

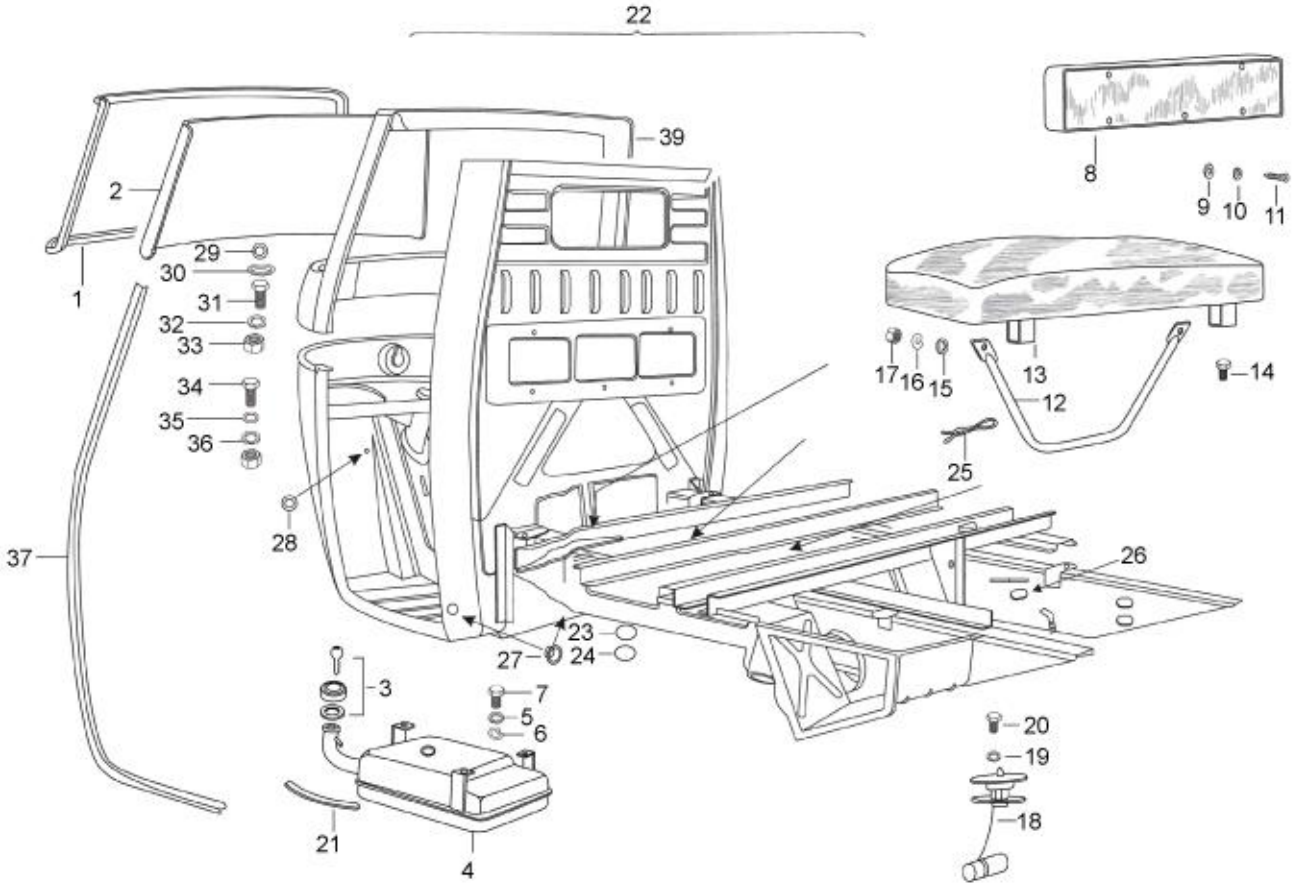
22
39
8
9
10
11
2
1
29
30
31
32
33
34
35
36
37
28
17
16
15
13
12
14
25
26
23
24
27
3
7
5
6
20
19
18
21
4

49

Print Date: 27-Mar-2022

PLATE-21

CHASSIS FRAME, FUEL TANK & SEAT

Fig. No.	Part No.	Description	Qty	Remarks
1	109012	WIND SHIELD PACKING	1	
2	587963	LAMINATED WINSHIELD GLASS	1	E - Marked (Export)
3	NS	NOT SERVICEABLE	1	
4	604826	FUEL TANK ASSLY. 501 CNG / LPG	1	
5	013880	PLAIN WASHER	4	
6	016406	SPRING WASHER	4	
7	31088	HEX HD SCREW M6 X 16 CL 8.8 (811061623)	4	
8	661627	DRIVER BACK REST (PASS.) (VE)	1	
8	661627	DRIVER BACK REST (PASS.) (VE)	1	
9	16405	SPRING WASHER M5	4	
10	16603	PLAIN WASHER (METALLIC)	4	
11	604606	HEX HD. SCREW M5X20 CL8.8	4	
12	567562	SEAT SUPPORT PIPE (COMM)	1	
12	587849	DRIVER SEAT SUPPORT PIPE (PASSENGER)	1	
13	B002875	PASS DRIVER SEAT ASSY-501 CNG	1	
13	B075444	PASS. SEAT ASSLY (WIRE MESH)	1	
13	B077471	DRIVER SEAT ASSY-CNG	1	
14	31119	HEX HD SCREW M8 X 25	2	
15	3058	PLAIN WASHER 15X8.4X1.5	2	
16	016408	SPRING WASHER	2	
17	20108	HEX NUT M8	2	
18	567878R	TANK UNIT	1	
19	16405	SPRING WASHER M5	6	
20	31054	HEX HD. SCREW M5X10 CL8.8	6	
21	587763	BREATHER PIPE	1	
22	B009071EG	501 PASS UPGRADE CHASSIS-BW	1	
23	128009	CAPSULE	1	
24	128010	CAP	1	
25	568682	FASTENER	2	
26	190255	GROMMET (LONG MEMBER)	5	
27	125998	PLUG	5	
28	568131	PLUG DOME DIA. 21 MM - CAB BEHIND HL	4	
29	105392	GROMMET	1	
30	568154	CUT GROMMET FOR HORN	1	
31	B001386	HEX HEAD SCREW M5X20	9	

50

Print Date: 27-Mar-2022

PLATE-21

CHASSIS FRAME, FUEL TANK & SEAT

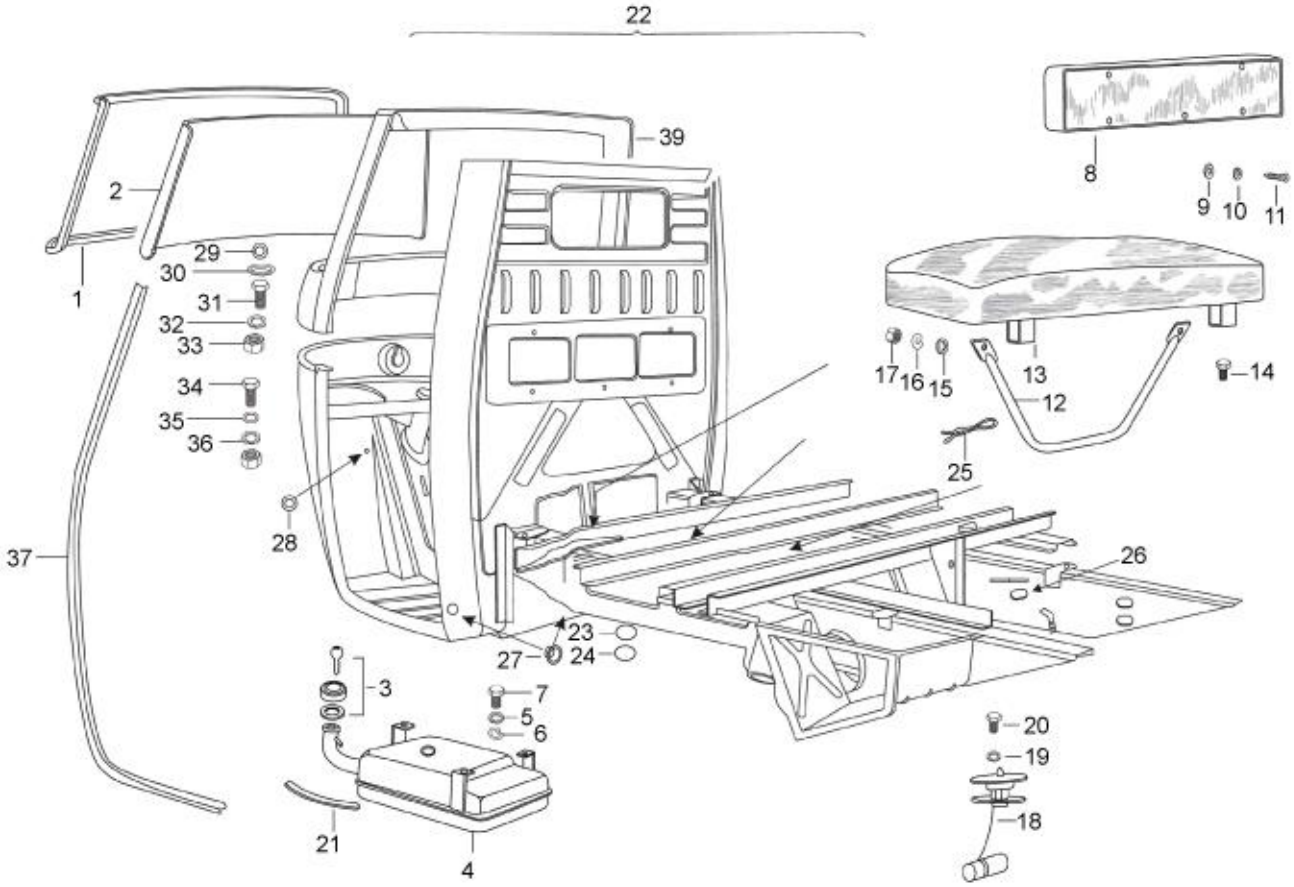
22
39
8
9
10
11
2
1
29
30
31
32
33
34
35
36
37
28
17
16
15
13
12
14
25
26
23
24
27
3
7
5
6
20
19
18
21
4

51

Print Date: 27-Mar-2022

PLATE-21

CHASSIS FRAME, FUEL TANK & SEAT

Fig. No.	Part No.	Description	Qty	Remarks
32	16405	SPRING WASHER M5	9	
33	20105	PLAIN NUT M5	9	
34	30072	HEX HEAD BOLT M8 X 35	2	
35	13861	PLAIN WASHER 20X8.2X2.5	2	
36	016408	SPRING WASHER	2	
37	118447	FRONT PACKING	2	
38	925888	RUBBER GASKET FOR TANK UNIT	1	
39	B076098ED	WINDSCREEN FRAME ASSLY - C/O 501 BSIV DSL	1	
22	B009071BY	CNG PASS MAIN FRAME ASSLY. BLACK	1	CNG
22	B009071WR	CNG PASS MAIN FRAME ASSLY.-W RED	1	CNG
22	B074751GY	MAIN FRAME ASSLY 501 LPG BSIII SPD - GY	1	LPG
22	B074751BL	MAIN FRAME ASSLY 501 LPG BSIII SPD - BLK	1	LPG
22	B074751EG	MAIN FRAME ASSLY 501 LPG BSIII SPD - EG	1	LPG

52

Print Date: 27-Mar-2022

PLATE-22
INNER PARTS OF CABIN

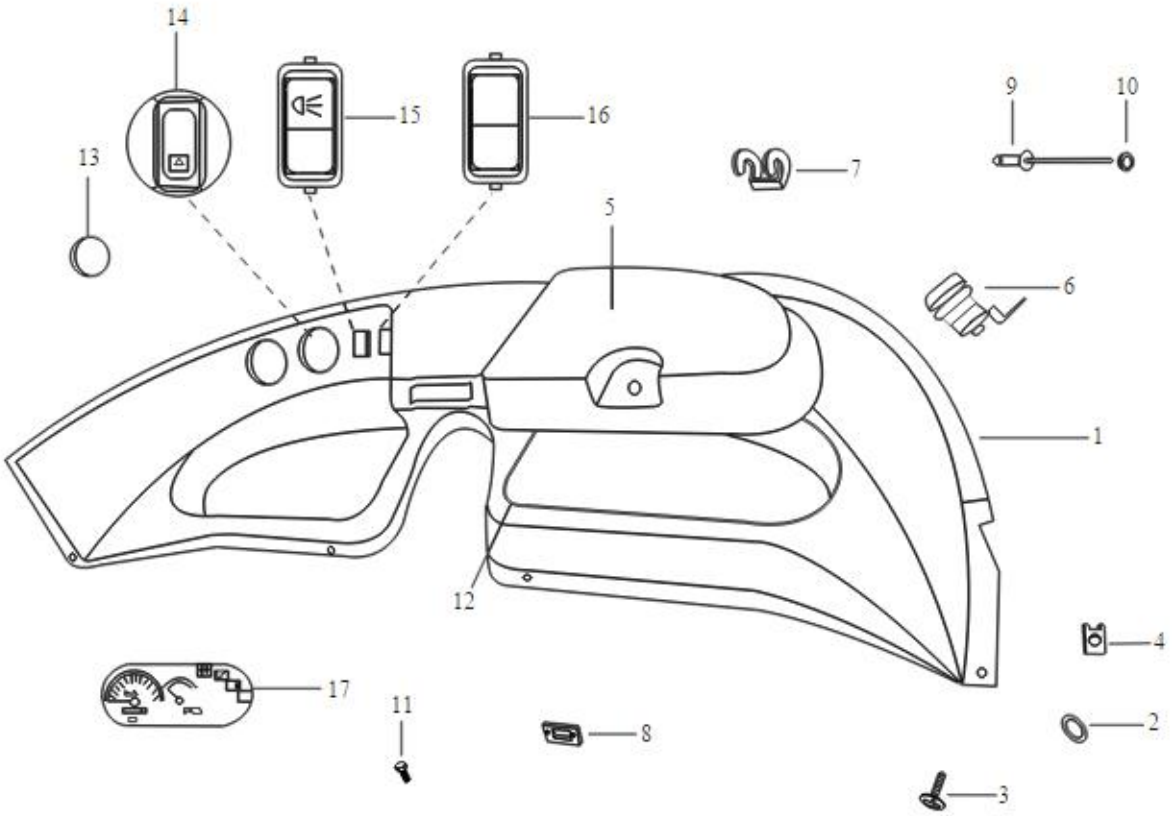
14
15
16
13
7
9
10
5
6
1
12
4
17
11
8
2
3

53

Print Date: 27-Mar-2022

PLATE-22

INNER PARTS OF CABIN

Fig. No.	Part No.	Description	Qty	Remarks
1	B041524	DASHBOARD S/A WITH GLOVE BOX COVER	1	
1	B041522	DASHBOARD (NS)	1	
2	16670	PLAIN WASHER 12X4.5X1	4	
3	15911	PAN SELF TAP SCREW 8SG X 16 AB	4	
4	8080	SPRING PLATE	4	
5	B041535	COVER; GLOVE BOX (NS)	1	
6	940120	LOCK GLOVE COMPARTMENT WITH KEY	1	
7	605389	HINGE	1	
8	643691	BOLT LOCK PLATE	1	
9	567893	POP RIVET 4 X 9.5	4	
10	003054	PLAIN WASHER	8	
11	660168	PAN SELF TP. SCREW 10 SGX13AB	4	
12	568671	GASKET - GLOW BOX COVER (N.I.)	4	
13	604984	CAP DASH BOARD	2	
14	587670R	SWITCH 3 POSITION	1	
15	660826R	HAZARD WARNING SWITCH WITH CROWN CAP (12V)(VE)	1	
16	587974R	WIPER MOTOR SWITCH/ SWITCH WIPER MOTOR	1	
17	B001556R	INSTRUMENT CLUSTER WITH SHIFTED SPEEDOME	1	

54

Print Date: 27-Mar-2022

PLATE-23
CHASSIS COMPONENTS

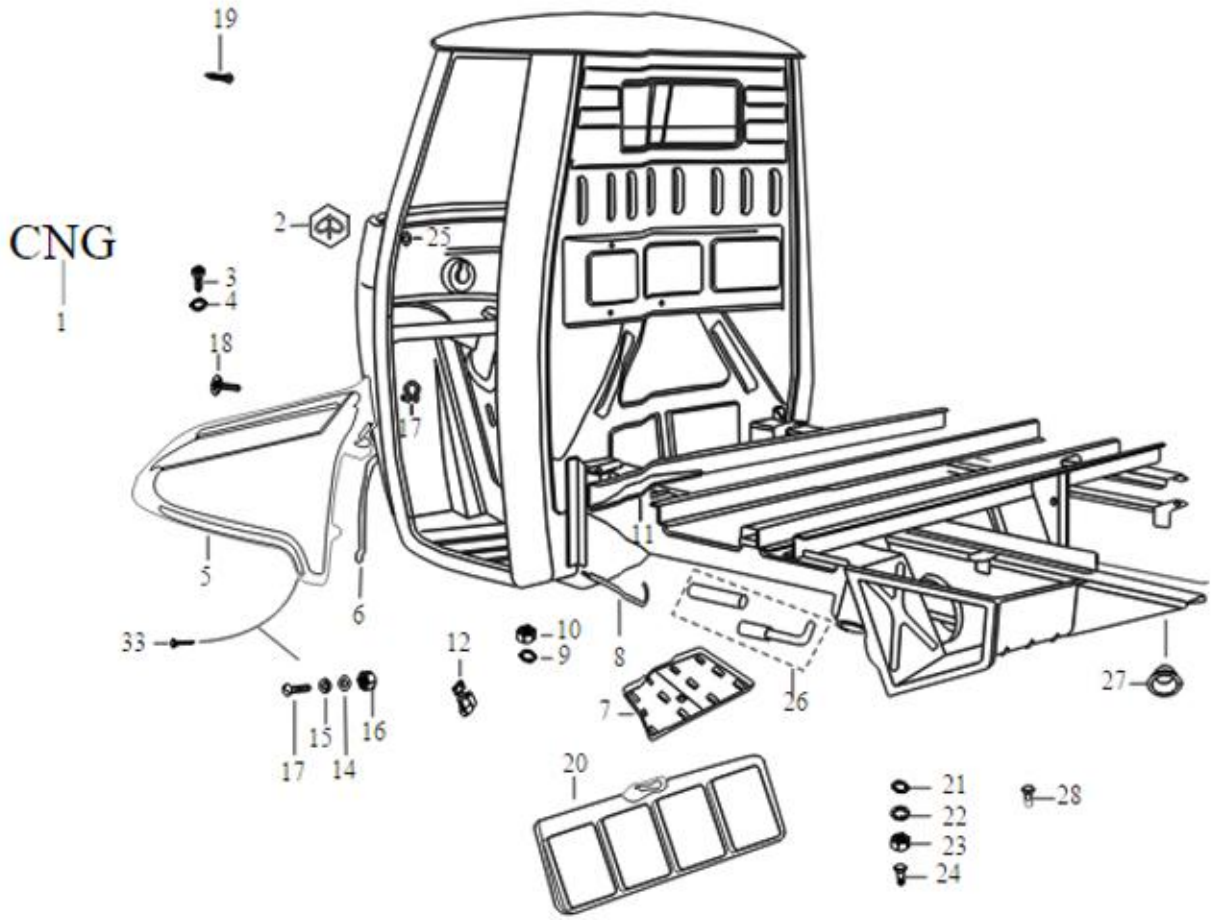
CNG
1
2
3
4
5
6
7
8
9
10
11
12
14
15
16
17
17
18
19
20
21
22
23
24
25
26
27
28
33

55

Print Date: 27-Mar-2022

PLATE-23
CHASSIS COMPONENTS

Fig. No.	Part No.	Description	Qty	Remarks
1	B003658	PLATE CNG	1	
2	B073088	HEX EMBLEM	1	
3	15727	PAN SELF TAPPING SCREW	2	
4	B008167	PL WASHER 12X3.2X1	2	
5	B042611	FRONT MUD GUARD APE CLASSIC NEW	1	
6	568702	GASKET-FRT MUDGUARD TOP	2	
6	568703	GASKET FOR FRONT MUDGUARD	2	
7	616649	BATTERY TRAY	1	
8	604954	TENSION ROD	1	
9	3058	PLAIN WASHER 15X8.4X1.5	1	
10	20108	HEX NUT M8	1	
11	604691	ANGLE BAR ASSLY	1	
12	B024179	SPARE WHEEL LOCK WITH KEY	1	
13	31092	HEX. HD SCREW M6X25	2	
14	013880	PLAIN WASHER	12	
15	78307	BENT SPRING WASHER M6	6	
16	20106	HEX NUT M6	6	
17	157716	SCREW ANCHORE	3	
18	18630	PAN SELF TAP SCREW 6SG X 25AB	3	
19	8265	SELF TAPPING SCREW	2	
20	116103	MUD FLAP FRONT	1	
21	013880	PLAIN WASHER	4	
22	016406	SPRING WASHER	4	
23	20106	HEX NUT M6	4	
24	31088	HEX HD SCREW M6 X 16 CL 8.8 (811061623)	4	
25	003054	PLAIN WASHER	2	
26	632508	TENSION ROD ASSY. (BATTERY MOUNTING.)	1	
27	568131	PLUG DOME DIA. 21 MM - CAB BEHIND HL	2	
28	31089	HEX HEAD SCREW M6X18 CL 8.8	4	

56

Print Date: 27-Mar-2022

PLATE-24

RUBBER MAT, REAR MUDGUARD

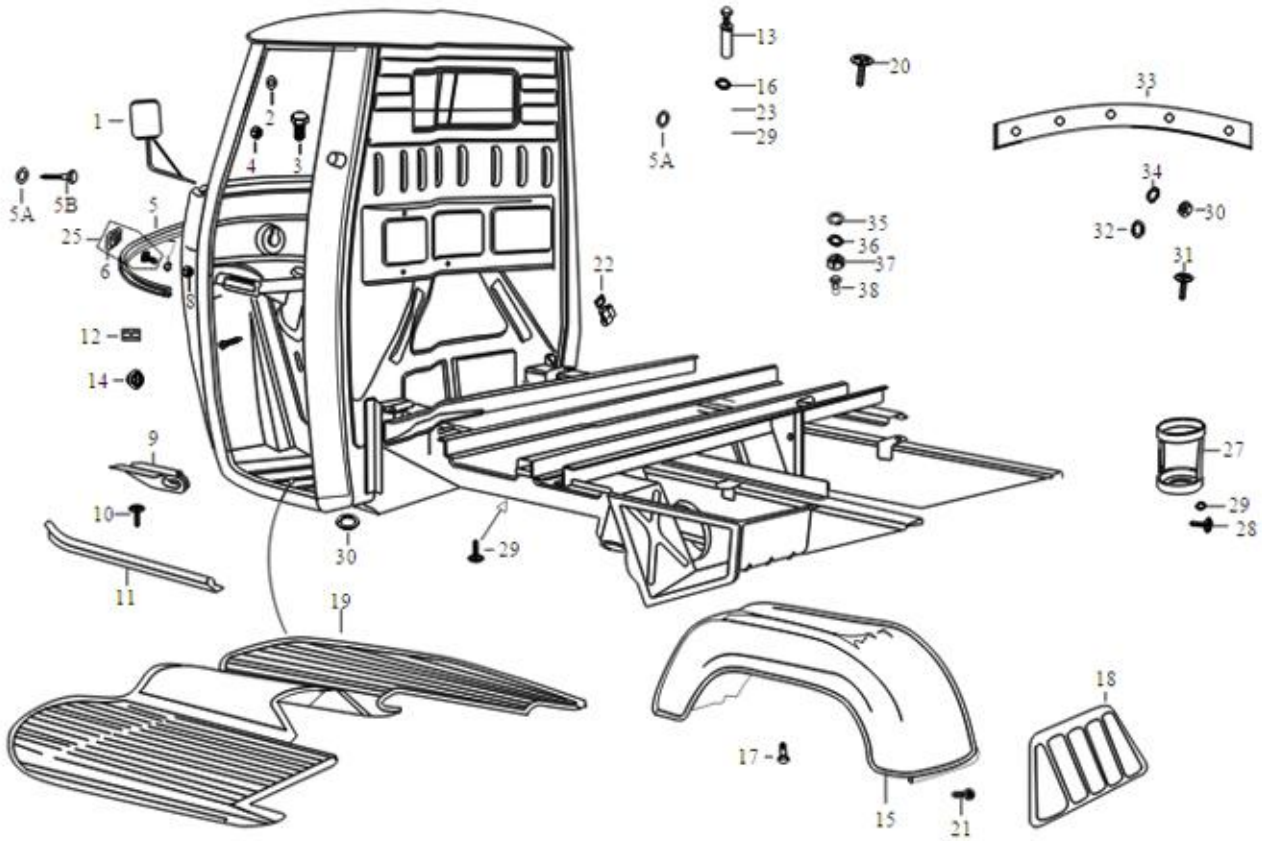
1
2
3
4
5
5A
5B
6
8
9
10
11
12
13
14
15
16
17
18
19
20
21
22
23
25
27
28
29
30
31
32
33
34
35
36
37
38

57

Print Date: 27-Mar-2022

PLATE-24

RUBBER MAT, REAR MUDGUARD

Fig. No.	Part No.	Description	Qty	Remarks
1	643685R	OUTER REAR VIEW MIRROR LH ASSY.	1	
1	643684R	OUTER REAR VIEW MIRROR RH ASSY.	1	
2	016408	SPRING WASHER	2	
2	12540	SPRING WASHER M8	2	
3	30072	HEX HEAD BOLT M8 X 35	2	
4	20108	HEX NUT M8	2	
5	190393	RIM COVERAGE JOINT	1	
5	B024645	RIM COVERAGE JOINT	1	
5A	14034	'O' RING	1	
5B	15911	PAN SELF TAP SCREW 8SG X 16 AB	2	
6	190462	PLATE ASSY.	5	
7	003054	PLAIN WASHER	5	
8	20104	HEX NUT M4	5	
10	8432	SCREW	6	
11	661634	PROTECTION GUIDE (LH) -VE	1	
11	661635	PROTECTION GUIDE (RH) -VE	1	
12	190465	TERMINAL	2	
12	B024855	TERMINAL	2	
13	15911	PAN SELF TAP SCREW 8SG X 16 AB	2	
14	76227	GROMMET	1	
15	B042612	REAR MUDGUARD RH/LH	2	
16	16603	PLAIN WASHER (METALLIC)	8	
17	604603	RIVET	8	
18	142424	MUDFLAP FOR RR MUDGUARD	1	
19	644979	CABIN MAT	1	
20	414948	KNOB CARPET	4	
21	142425	BUTTON	4	
22	B024179	SPARE WHEEL LOCK WITH KEY	1	
23	568741	LOCK WASHER	3	
24	B002199	PACKING SOUND DAMPNER	12	
25	190462	PLATE ASSY.	5	
25 A	190479	JACK ASSY. COMPONENT	5	
26	3055	PLAIN WASHER M5	1	
26 A	6078	PLAIN WASHER 12 X 5.2 X 1	2	
27	645141	BOTTLE CARRIER STAND	1	

58

Print Date: 27-Mar-2022

PLATE-24

RUBBER MAT, REAR MUDGUARD

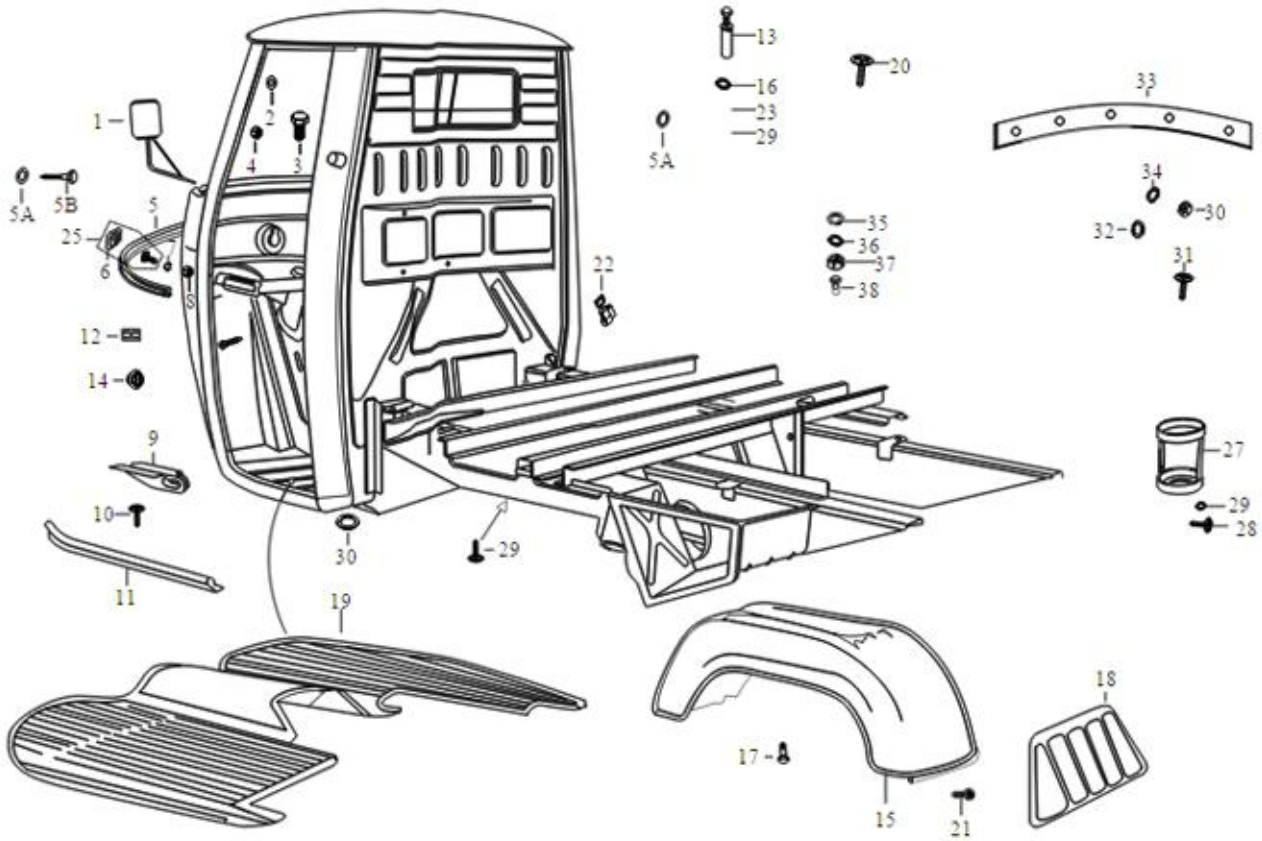
1
2
3
4
5
5A
5B
6
8
9
10
11
12
13
14
15
16
17
18
19
20
21
22
23
25
27
28
29
30
31
32
33
34
35
36
37
38

59

Print Date: 27-Mar-2022

PLATE-24

RUBBER MAT, REAR MUDGUARD

Fig. No.	Part No.	Description	Qty	Remarks
28	31058	HEX HEAD SCREW M5 X 16 CC8.8	2	
29	16405	SPRING WASHER M5	4	
30	20105	PLAIN NUT M5	7	
31	14628	CSK SELF TP.SCREW 6SG X 16 AB	10	
32	3055	PLAIN WASHER M5	7	
32	568135	WASHER(NI PLATED)	10	
33	587961	PROFILE SECTION SHORT FOR CARPET	1	
33	587962	PROFILE	1	
34	16405	SPRING WASHER M5	7	
35	12540	SPRING WASHER M8	2	
36	13861	PLAIN WASHER 20X8.2X2.5	2	
37	20108	HEX NUT M8	2	
38	30072	HEX HEAD BOLT M8 X 35	2	

60

Print Date: 27-Mar-2022

PLATE-25
TOOLS AND WHEELS

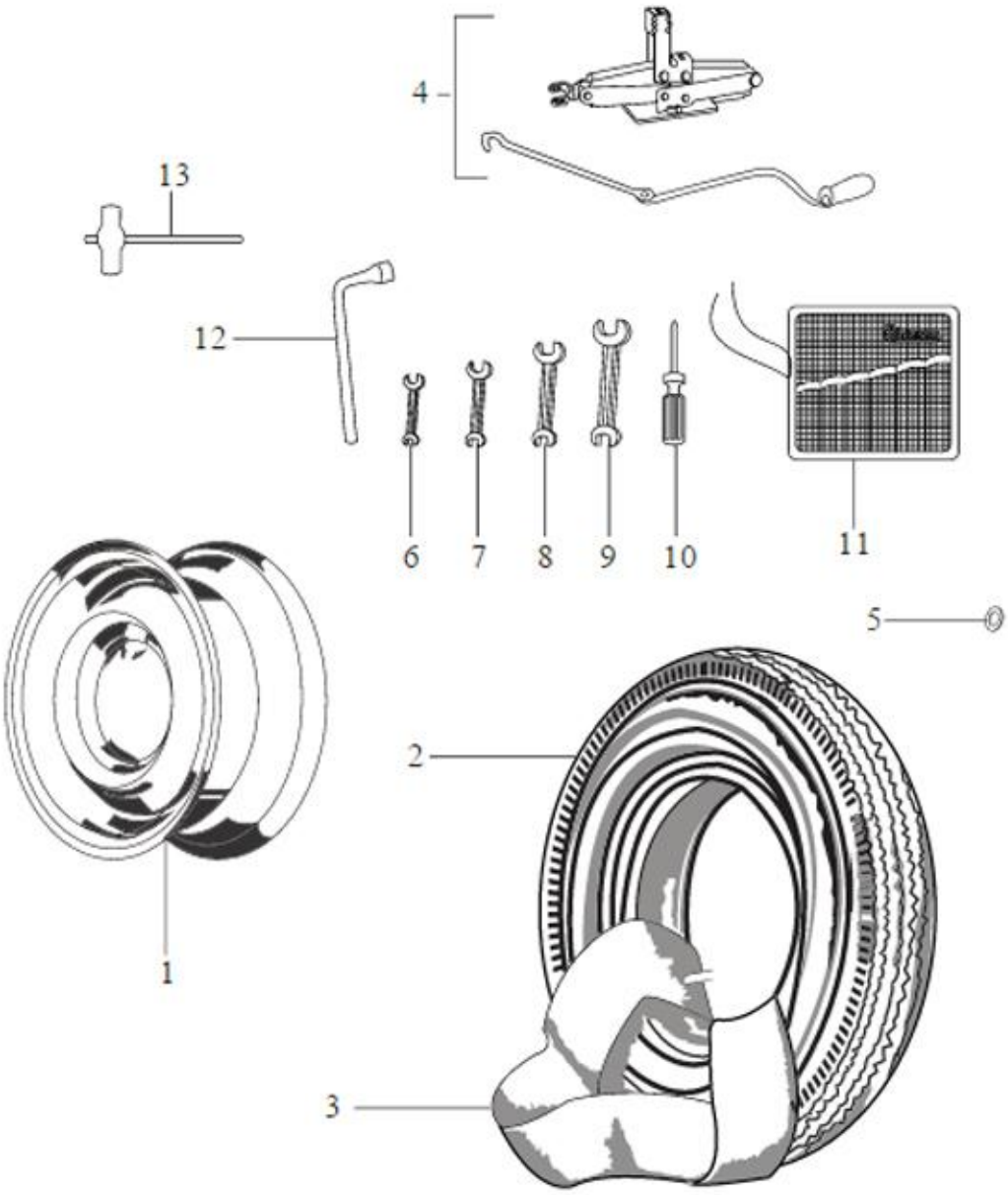
4
13
12
6
7
8
9
10
11
5
2
1
3

61

Print Date: 27-Mar-2022

PLATE-25
TOOLS AND WHEELS

Fig. No.	Part No.	Description	Qty	Remarks
1	644973R	WHEEL RIM ASSY.	1	
2	587971	TYRE 4.50 X 10 8 PR	1	
3	151924	INNER TUBE TYRE 4.5 X 10 INCH	4	
4	B001954R	JACK ASSEMBLY COMPONENT	1	
5	6018	PL. WASHER	2	
6	567454	DOUBLE END SPANNER7/8	1	
7	567455	DE SPANNER 10X13 IS:2018(ZN PLATING)	1	
8	567456	DOUBLE END SPANNER 12/14	1	
9	567457	DE SPANNER 17/19	1	
10	567458	SCREW DRIVER (-)&(+) 80	1	
11	604707	TOOL BAG	1	
12	567459	L TYPE WHEEL SPANNER (A/F19)	1	
13	E500405518	STARTING ROPE	1	
13	192020017	STARTING ROPE	1	

62

Print Date: 27-Mar-2022

PLATE-26
REAR SUSPENSION

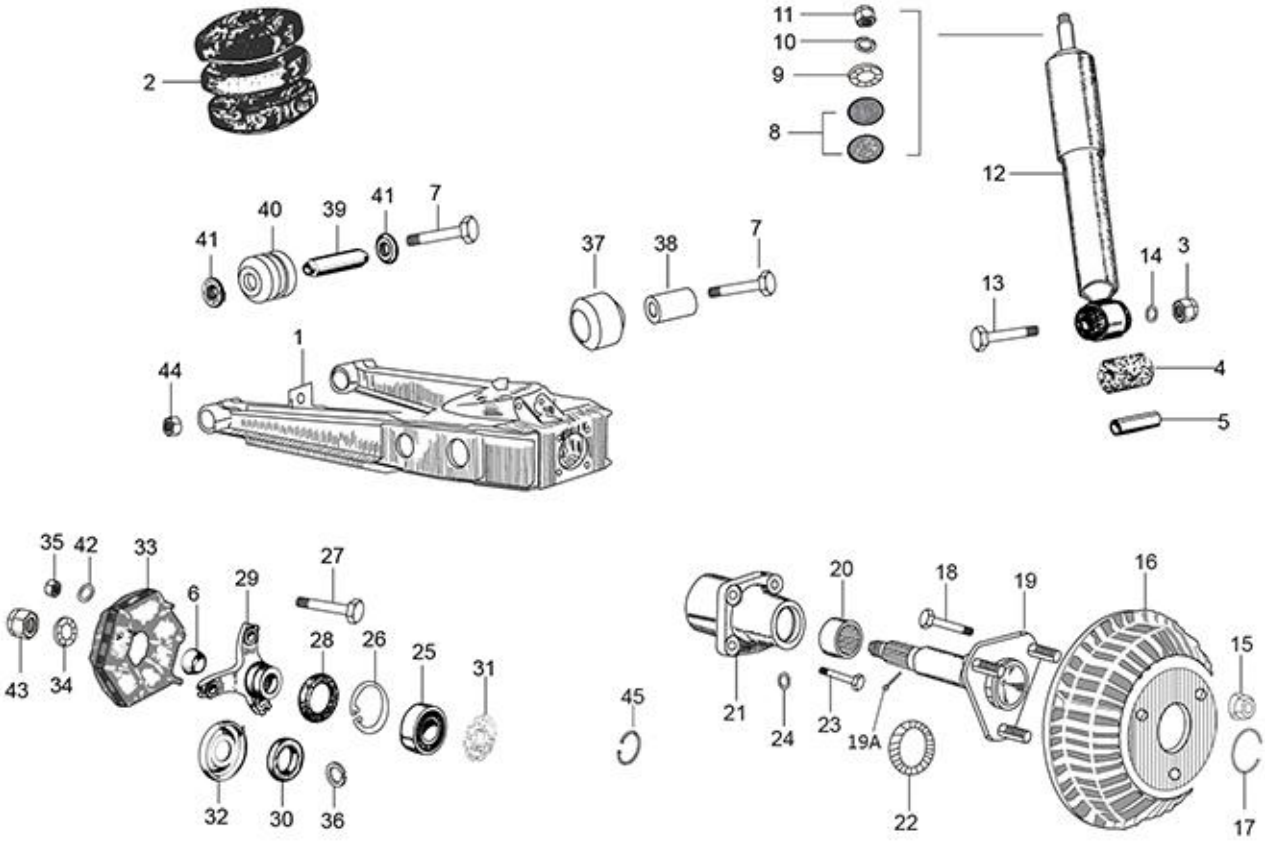
2
11
10
9
8
12
41
40
39
41
7
37
38
7
14
3
13
1
44
4
5
35
42
33
27
6
29
28
26
25
31
43
34
32
30
36
45
20
18
19
16
21
24
23
19A
22
15
17

63

Print Date: 27-Mar-2022

PLATE-26

REAR SUSPENSION

Fig. No.	Part No.	Description	Qty	Remarks
1	6C000363	ARM ASSLY RH RR SUSP. WITH BUSH-REG	1	Communized with BS6
1	6C000362	ARM ASSLY LH RR SUSP. WITH BUSH-REG	1	Communized with BS6
2	568289	RUBBER BUMPER	2	
3	231370	SELF BREAKING NUT M10	2	
4	157103	BUSH - SHOCK ABSORBER	2	
5	107827	SPACER	1	
6	128633	CONE	2	
7	643741	HEX HDD BOLT M10 X 80 CL 12.9	4	
8	74414	RUBBER BUSH/BUFFER FOR COUPLING SHOCK ABSORBE	4	
9	6066	PL WASHER 10.5X38X9	2	
10	16410	SPRING WASHER	2	
11	20110	HEX NUT M10	2	
12	136451R	SHOCK ABSORBER REAR	2	
13	267068	HEX HEAD BOLT M10 X 60 CC 10.9	2	
14	286328	PLAIN WASHER 20X10.2X2	2	
15	660931	WHEEL NUT (M12 X 1.5)	3	
16	152580	BRAKE DRUM APE - 501	2	
17	107870	ELASTIC RING	2	
18	652520	BOLT FOR AXLE M12 X 40 (VE WHEEL RIM)	3	
19	6C000060	WHEEL AXLE	2	
19	6C000060	WHEEL AXLE	2	(Modified)
19A	12790	SPLIT PIN	2	
20	661282	NEEDLE ROLLER BEARING	2	
21	6C000662	REAR WHEEL HUB	2	
22	20359	SEAL RING	2	
23	31159	HEX HD SCREW M10 X 35 CC 8.8	8	
24	16410	SPRING WASHER	8	
25	243303R	DEEP GROVE BALL BRG-RR WH AXLE	2	
26	6650	CIRCLIP DIA 50 (INT)	2	
27	15594	HEX HDD BOLT M10 X 35	6	
27.1	B024373	ALLEN BOLT M10X65 CL 10.9	6	
28	196302	OIL SEAL	2	
29	587617	ELASTIC JOINT CONNECTION HUB (WHL - SIDE)	2	
30	661267	RING	2	
31	602120	LEFT BRAKE JAW HOLDING CABLE PLATE	1	

64

Print Date: 27-Mar-2022

PLATE-26
REAR SUSPENSION

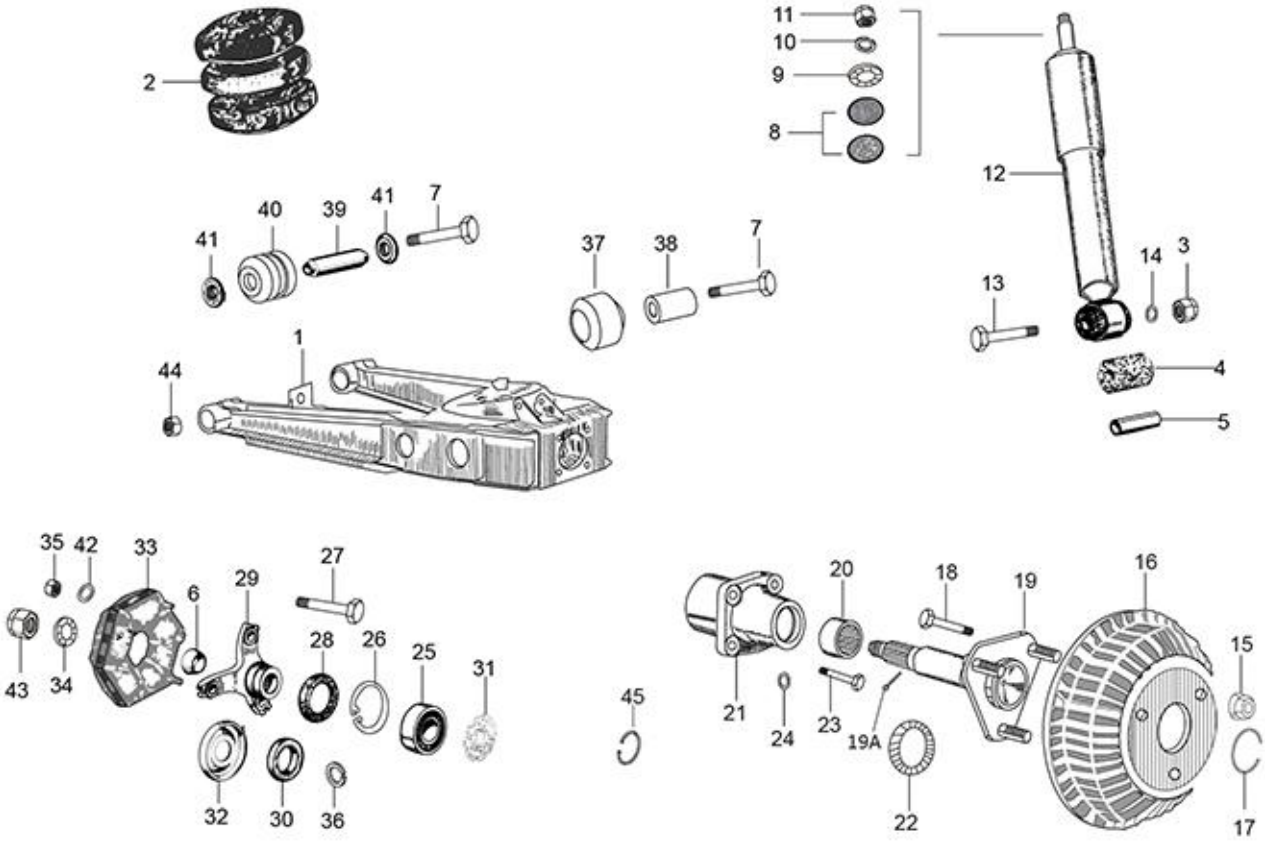
2
11
10
9
8
12
41
40
39
41
7
37
38
7
14
3
13
1
44
4
5
35
42
33
27
6
29
28
26
25
31
43
34
32
30
36
45
20
18
19
16
15
21
24
23
19A
22
17

65

Print Date: 27-Mar-2022

PLATE-26
REAR SUSPENSION

Fig. No.	Part No.	Description	Qty	Remarks
31	602123	RIGHT BRAKE JAW HOLDING CABLE PLATE	1	
32	109892	PROTECTION CUP RR HUB	2	
33	604535	FLEXIBLE COUPLING	1	
34	3068	PLAIN WASHER	2	
35	231370	SELF BREAKING NUT M10	12	
36	137026	SPRING RING	2	
37	226662	RING FOR ELASTIC SUPPORT	2	
38	226661	INTERNAL BUSH	2	
39	267065	SPACER FRONT	2	
40	226596	BUSH FRONT RING FOR ELASTIC SUPPORT	2	
41	661266	SHOULDER WASHER	4	
42	237246	SHIM WASHER 20X10.2X1	12	
43	136426	NUT WITH COLLAR	2	
44	231370	SELF BREAKING NUT M10	4	
45	137026	SPRING RING	2	

66

Print Date: 27-Mar-2022

PLATE-27

STEERING COLUMN AND FRONT SUSPENSION

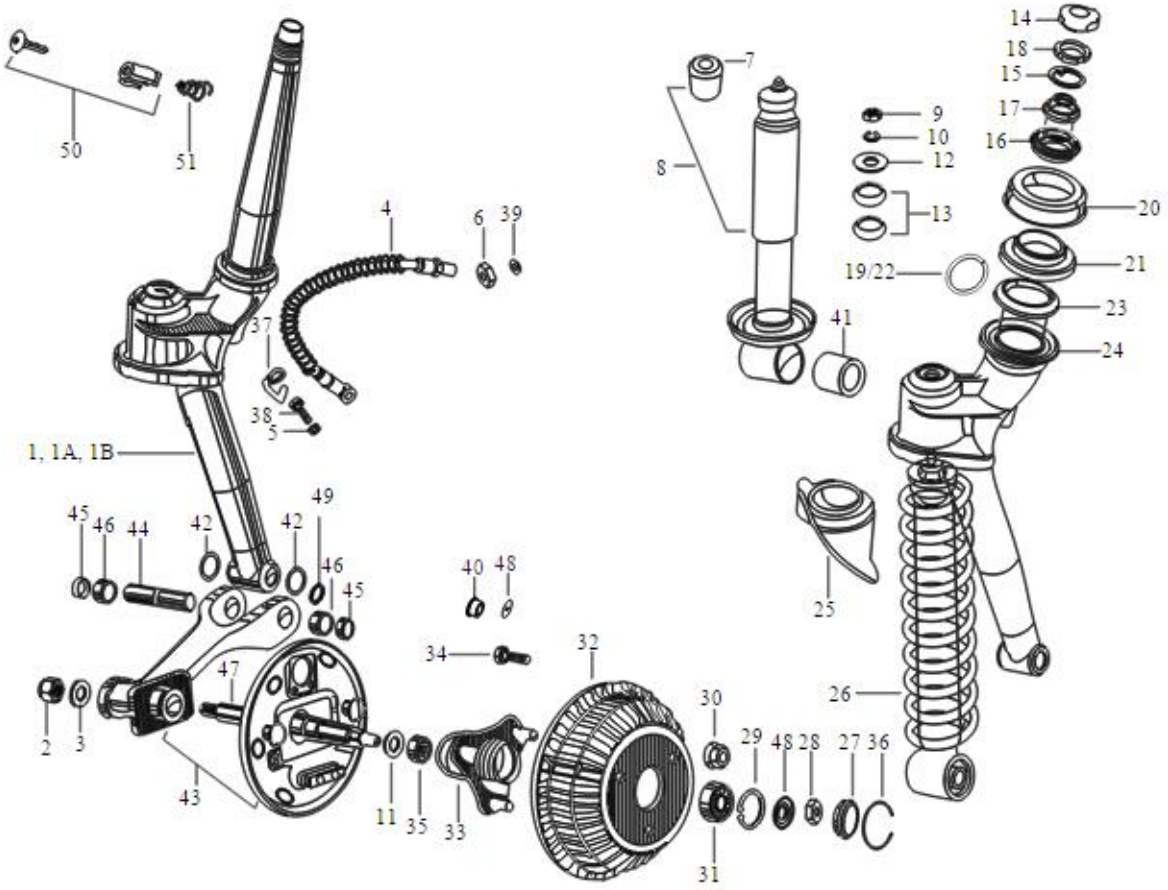
50
51
4
6
39
37
38
5
1, 1A, 1B
45
46
44
42
42
49
46
45
47
2
3
43
11
35
33
40
48
34
32
30
29
48
28
27
36
31
26
25
7
8
9
10
12
13
19/22
41
14
18
15
17
16
20
21
23
24

67

Print Date: 27-Mar-2022

PLATE-27

STEERING COLUMN AND FRONT SUSPENSION

Fig. No.	Part No.	Description	Qty	Remarks
1	660153	STEERING COLUM WITH I.P.	1	
1A	660498SP	STEERING COLUMN ASSLY (NRB) -501 REG SPD-PASS	1	
1B	660499SP	STEERING COLUMN ASSLY (NRB) -501 REG SPD	1	
2	568095	NYLOCK NUT	1	
3	87067	PLAIN WASHER 30.5X14.3X2	1	
4	644814R	FLEXIBLE BRAKE HOSE	1	
5	127927R	PACKING	2	
6	21216	HEX NUT M16 X 1.5	4	
7	75708	SILENT BLOCK	1	
8	569246R	FRONT SHOCK ABSORBER	1	
9	20110	HEX NUT M10	1	
10	16410	SPRING WASHER	1	
11	136434	OIL SEAL	1	
12	6066	PL WASHER 10.5X38X9	1	
13	157103	BUSH - SHOCK ABSORBER	2	
14	604758	PROTECTION	1	
15	108873	STOP WASHER FOR HOLDING	1	
16	567990	BEARING RACE UPPER BOTTOM	1	
17	567991	BEARING RACE UPPER TOP	1	
18	108874	SECURING RING NUT	1	
19	6C000190	UPPER BALL CAGE (VE)	1	
20	109064	DUST COVER	1	
21	567992	BEARING RACE LOWER TOP	1	
22	6C000191	LOWER BALL CAGE (VE)	1	
23	567993	BEARING RACE LOWER BOTTOM	1	
24	109066	WASHER WITH PROTECTION FOR BEARING	1	
25	109265	SPLASH GUARD DUST COVER	1	
26	569255	FRONT SUSPENSION SPRING	1	
27	107871	CAP	1	
28	74521	NUT M14 X 1.5	1	
29	567473	CIRCLIP DIA. 42 INT. (841004203)	1	
30	660931	WHEEL NUT (M12 X 1.5)	3	
31	30209R	BALL BEARING FRONT WHEEL HUB	1	
32	152580	BRAKE DRUM APE - 501	1	
33	652521	FR. WHEEL HUB ASSY.	1	

68

Print Date: 27-Mar-2022

PLATE-27

STEERING COLUMN AND FRONT SUSPENSION

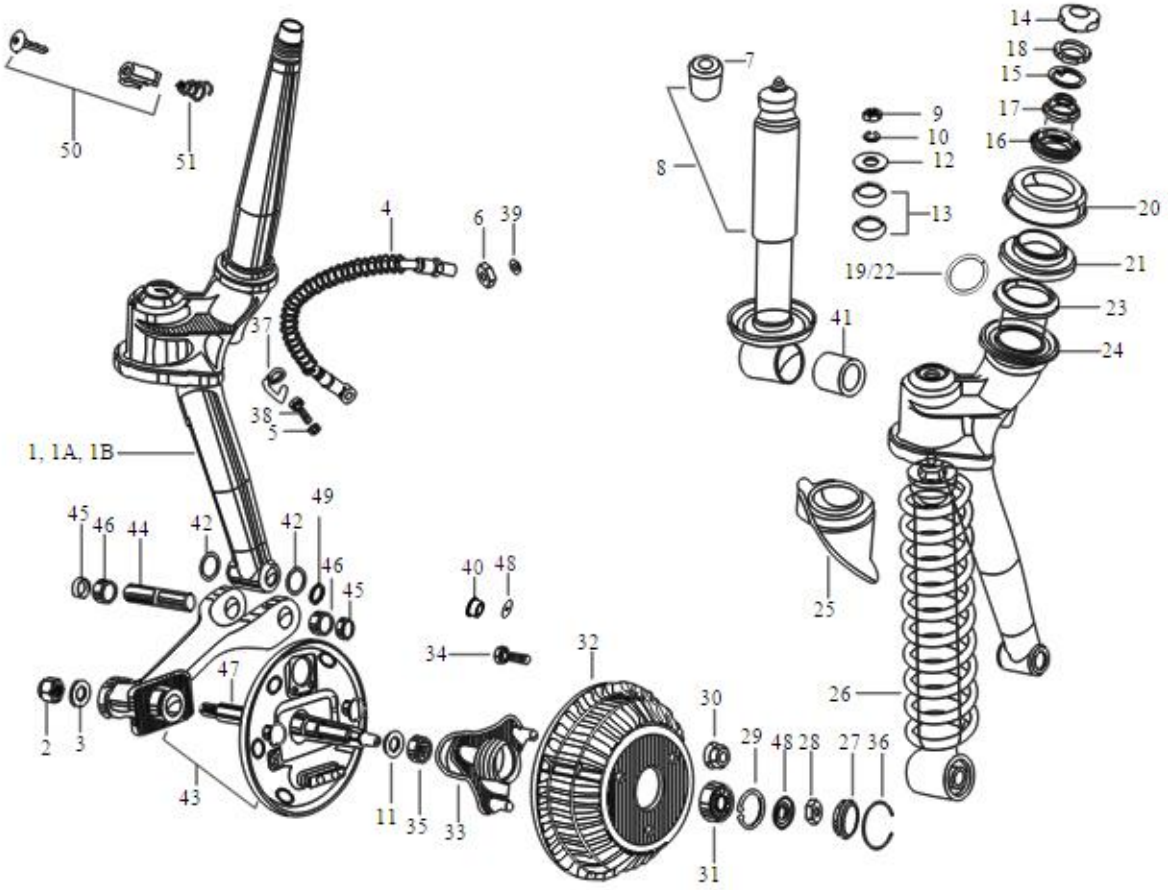
50
51
4
6
39
37
38
5
1, 1A, 1B
45
46
44
42
42
49
46
45
47
2
3
43
11
35
33
40
48
34
32
30
29
48
28
27
36
31
26
25
7
8
9
10
12
13
19/22
41
14
18
15
17
16
20
21
23
24

69

Print Date: 27-Mar-2022

PLATE-27

STEERING COLUMN AND FRONT SUSPENSION

Fig. No.	Part No.	Description	Qty	Remarks
34	652520	BOLT FOR AXLE M12 X 40 (VE WHEEL RIM)	1	
34	108215	BOLT FOR AXLE M12 X 40	1	
35	125289	NEEDLE BEARING, CRANKASE, FRONT WHEEL	1	
36	107870	ELASTIC RING	2	
37	B003228	LOCK PLATE FRONT BRAKE HOSE	1	
38	587829	BENJO BOLT	1	
39	48197	PL WASHER 24X16X1.5	3	
40	107732	BUSH FOR SILENT BLOCK	1	
41	109117	RUBBER BUSH (FRT SHOCK ABSORBER) / RING	1	
41	566545	RUBBER BUSH (FRT SHOCK ABSORBER) - MODIFIED	1	
42	6733	O RING	2	
43	616541	BRACKET WHEEL CARRIER WITH PI	1	
44	137235	STEERING PIN	1	
45	8771	OIL SEAL (18-24-4)	2	
46	107718	ROLLER BUSH	2	
47	643772R	FRONT WHEEL AXLE	1	
48	180431	COIN WASHER	1	
49	150579	RING FOR HOLDING TYPE J F101 17A	2	
50	B024732	STG LOCK ASSLY WITH KEY	1	
51	569150	SPRING; STEERING LOCK (MODIFIED)	1	
52	661231	CIRCLIP STEERING LOCK DIA 16 (INT)	1	
53	604759	RUBBER CAP STEERING COLUMN (N.I.)	1	
54	604758	PROTECTION	1	
55	KIT940003R	STEERING PIN KIT WITH O RING	1	
56	KIT 95021	STEERING CONE SET UPPER CONSISTINMG OF SR NOS 16 & 17 (N.I.)	1	
57	KIT 95022	STEERING CONE SET UPPER CONSISTINMG OF SR NOS 21 & 23 (N.I.)	1	
58	KIT96033R	MODIFIED BALL KIT FOR 3WH (WHITE)	1	

70

Print Date: 27-Mar-2022

PLATE-28
HANDLE BAR AND CONTROL

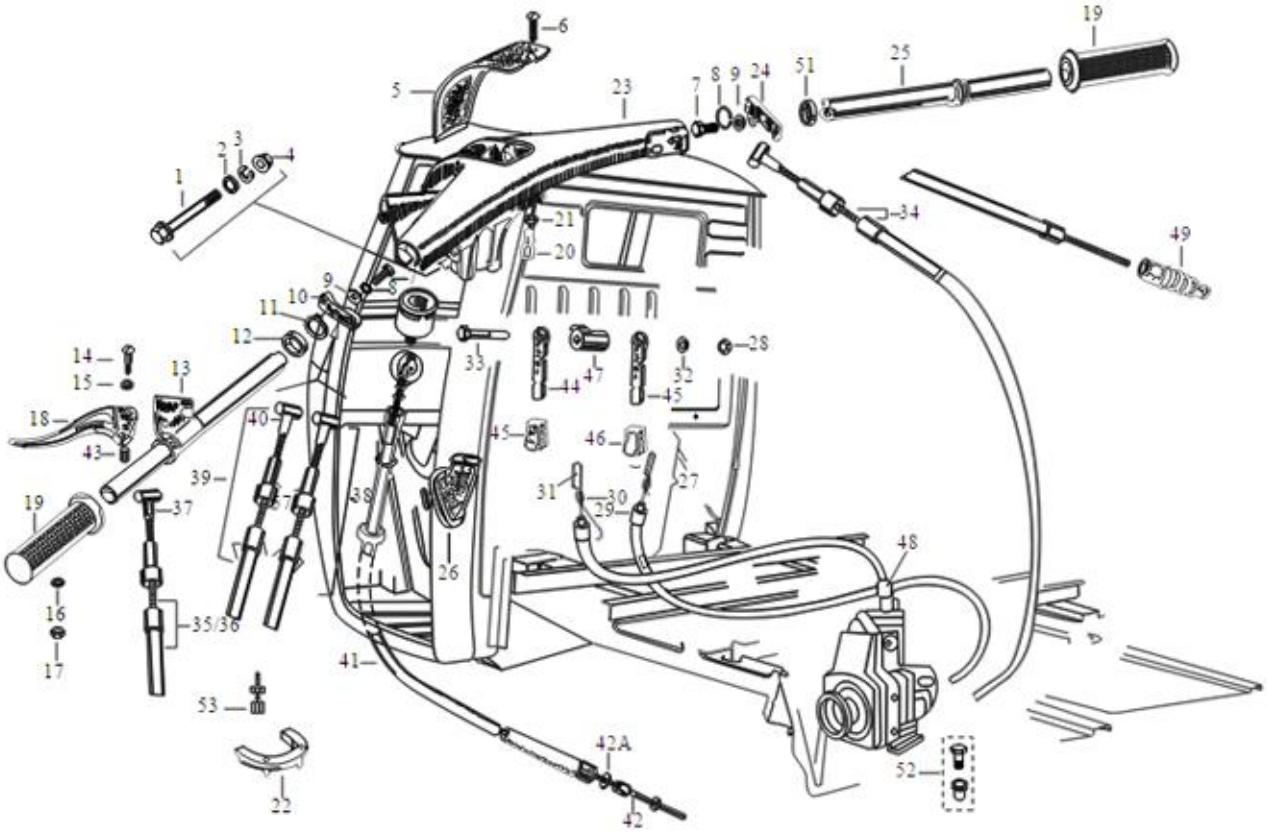
6
19
5
23
7
8
9
24
51
25
2
3
4
1
21
20
34
49
9
10
11
12
14
15
13
33
44
47
32
28
45
18
43
40
45
46
39
31
30
29
27
19
37
38
26
48
16
17
35/36
41
53
42A
52
22
42

71

Print Date: 27-Mar-2022

PLATE-28

HANDLE BAR AND CONTROL

Fig. No.	Part No.	Description	Qty	Remarks
1	30103	HANDLE SECURING BOLT M10 X 70 CL 8.8	1	
2	16626	PLAIN WASHER (18X10.5X2)	2	
3	16410	SPRING WASHER	1	
4	20110	HEX NUT M10	1	
5	B041600	HANDLE BAR COVER	1	
5	B041600	HANDLE BAR COVER	1	
6	632158	CSK HEAD SCREW	1	
7	31089	HEX HEAD SCREW M6X18 CL 8.8	2	
8	016406	SPRING WASHER	2	
9	6125	PLAIN WASHER (14X6.4X1.5)	2	
10	109775	GEAR CONTROL LEVER S/A	1	
11	60565	SPRING WASHER	1	
12	109404	WASHER OF RABBET(41737)	1	
13	127451	TUBE WITH TERMINAL S/A	1	
14	B075313	SCREW FOR CLUTCH LEVER (NEW)	1	
15	16319	BENT SPRING WASHER	1	
16	16620	PLAIN WASHER	1	
17	12138	NYLOCK NUT M6	1	
18	164906	CLUTCH CONTROL LEVER	1	
19	141925	HANDLE	2	
20	197071	ADJUSTER SCREW M6	2	
21	20106	HEX NUT M6	2	
22	126902	PROTECTION COLLAR CABLE	1	
23	B002823	HANDLE (‘T’ TYPE)	1	
24	109635	THROTTLE CONTROL LEVER WITH IP	1	
25	587902	ACCELERATOR TUBE ASSY.	1	
26	109227	PROTECTION GROMMET	1	
27	662567	CHOKE CONTROL CABLE ASSLY.	1	
28	2438	HEX SELF LOCKING NUT	1	
29	616695	ENG. STOP CANTROL CABLE INNER	1	
30	B001505	DECOMPRESSION TRANSMISSION ASSLY FOR ST	1	
30	660351	DECOMPRESSOR CONTROL CABLE	1	
31	604508	DECOMPRESSOR CONTROL CABLE INNER	1	
32	7608	WASHER	1	
33	30077	HEX HEAD SCREW	1	

72

Print Date: 27-Mar-2022

PLATE-28
HANDLE BAR AND CONTROL

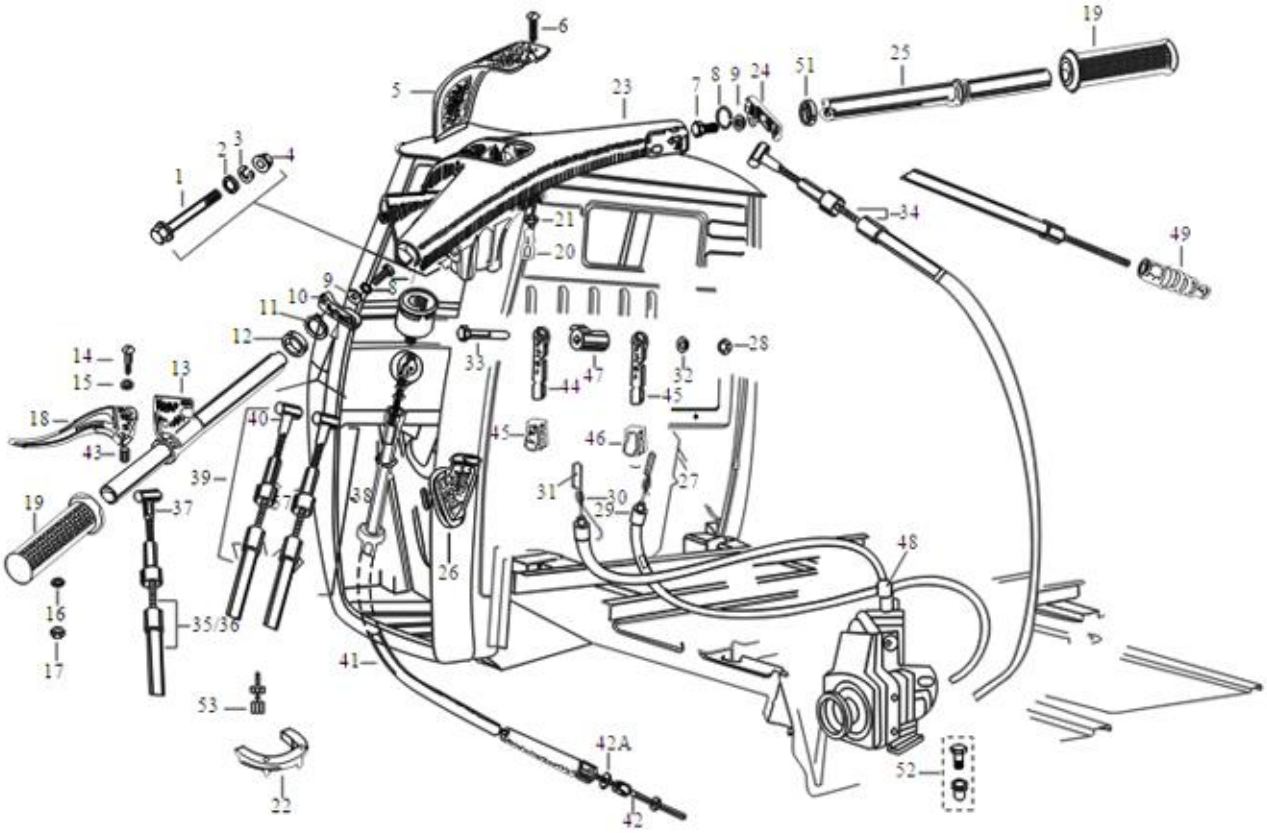
6
19
5
23
7
8
9
24
51
25
2
3
4
1
21
20
34
49
9
10
11
12
14
15
13
33
44
47
32
28
45
18
43
40
45
46
39
31
30
29
27
19
37
38
26
48
16
17
35/36
41
53
42A
52
22
42

73

Print Date: 27-Mar-2022

PLATE-28

HANDLE BAR AND CONTROL

Fig. No.	Part No.	Description	Qty	Remarks
34	662568	GASOLINE CONTROL TRANSMISION ASSY.	1	
34	B002615	GASOLINE CONTROL TRANSMISION ASSY.	1	LD
35	604779	CLUTCH CONTROL TRANSMISSION ASSLY.	1	
36	660141	CLUTCH CONTROL CABLE WITH TERMINAL	1	
37	587806	CLUTCH CONTROL CABLE WITH TERMINAL	1	
38	587628	CABLE GEAR CONTROL ASSY. (DARK GREY)	1	
39	587919	CABLE GEAR CONTROL ASSY. NO. 2 (LIGHT GREY)	1	
40	587803	WIRE, GEAR CONTROL WITH TERMINAL	2	
40A	20105	PLAIN NUT M5	2	
41	645124	SPEEDO CABLE	1	
42	587812	TRANSMISSION CABLE (INNER) FOR ODOMETER	1	
42A	97756	METALLIC PLAIN WASHER	4	
43	125181	SPACER	1	
44	119928	LEVER	2	
45	632137	KNOB RED (ENGINE STOP)	1	
46	604715	KNOB FOR DECOMPRESSION	1	
47	119181	SPACER	1	
48	119278	TERMINAL	1	
49	118806	PROTECTION BELLOW	2	
50	15478	GROMMET4	2	
51	587904	SINTERED WASHER HANDLE BAR (41769)	1	
52	B024379	SCREW TERMINAL ASSLY-ENGINE STOP,D.C.	1	
53	B024774	SLEEVE FOR ACC. AND CHOKE CABLE	2	NI
54	B024775	SLEEVE	2	Ni

74

Print Date: 27-Mar-2022

PLATE-29

BRAKE - TANDEM MASTER CYLINDER, BRAKE PIPE AND HAND BRAKES

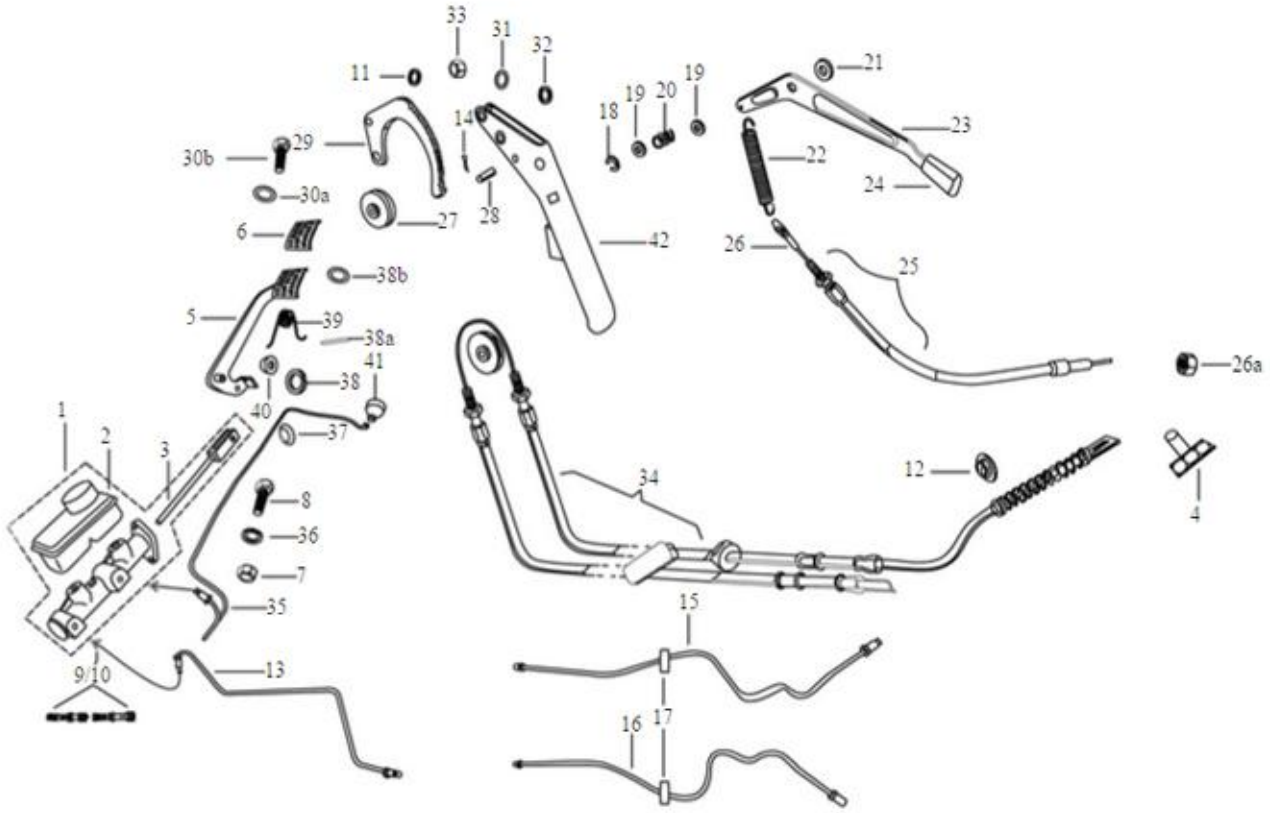
33
31
32
11
21
19
20
19
18
14
23
30b
29
22
24
30a
27
28
6
42
26
25
38b
5
39
38a
41
26a
38
40
1
37
2
3
12
34
8
4
36
7
35
15
9/10
13
16
17

75

Print Date: 27-Mar-2022

PLATE-29

BRAKE - TANDEM MASTER CYLINDER, BRAKE PIPE AND HAND BRAKES

Fig. No.	Part No.	Description	Qty	Remarks
1	604880	TANDEM MASTER CYLINDER ASSLY.	1	
2	604877	BRAKE OIL TANK	1	
3	587702	PUSH ROD	1	
4	119278	TERMINAL	1	
5	604760	BRAKE PEDAL WITH FOOT REST ASSLY	1	
6	567461	RUBBER PROTECTION FOR PEDAL	1	
7	20108	HEX NUT M8	2	
8	31122	HEX HD. SCREW M8X30 CL 8.8	2	
8	016408	SPRING WASHER	2	
9	925508	MAJOR KIT TMC (KBX 1008)	1	
10	925509	MINOR KIT TMC (KBX 1009)	1	
11	016408	SPRING WASHER	1	
12	604502	CUP RETAINING SPRING (41733)	2	
13	B075852	BRAKE TUBE FOR REAR WHEEL	1	
14	12761	SPLIT PIN	1	
15	644813	BRAKE PUMP TUBE OF LEFT REAR WHEEL	1	
16	644812	BRAKE PUMP TUBE OF RIGHT REAR WHEEL	1	
18	5969	CIRCLIP DIA 9 E TYPE	1	
19	6173	METALLIC PLAIN WASHER (808001026)	1	
20	108785	SPRING	1	
21	B042317	SPACER-RC LEVER	1	
22	567690	REVERSE GEAR COUPLING SPRING	1	
23	125411	BACKING COMMAND LEVER	1	
24	604717	KNOB FOR R.C.	1	
25	587633	CABLE, REVERSE GEAR CONTROL ASSY.	1	
26	587822	CABLE, REVERSE GEAR WITH TERMINALS.	1	
26A	20105	PLAIN NUT M5	2	
27	567898	PULLEY FOR HAND BRAKE	1	
28	567899	CLEVIS PIN	1	
29	B042794	RATCHET , HAND BRAKE CONTROL	1	
30A	140728	PLAIN WASHER 8.5 X 24 X 3	6	
30B	31118	SCREW M8X20	1	
31	6173	METALLIC PLAIN WASHER (808001026)	1	
31A	13812	METALLIC PLAIN WASHER	1	
32	6411	EXT CIRCLIP DIA 11	1	

76

Print Date: 27-Mar-2022

PLATE-29

BRAKE - TANDEM MASTER CYLINDER, BRAKE PIPE AND HAND BRAKES

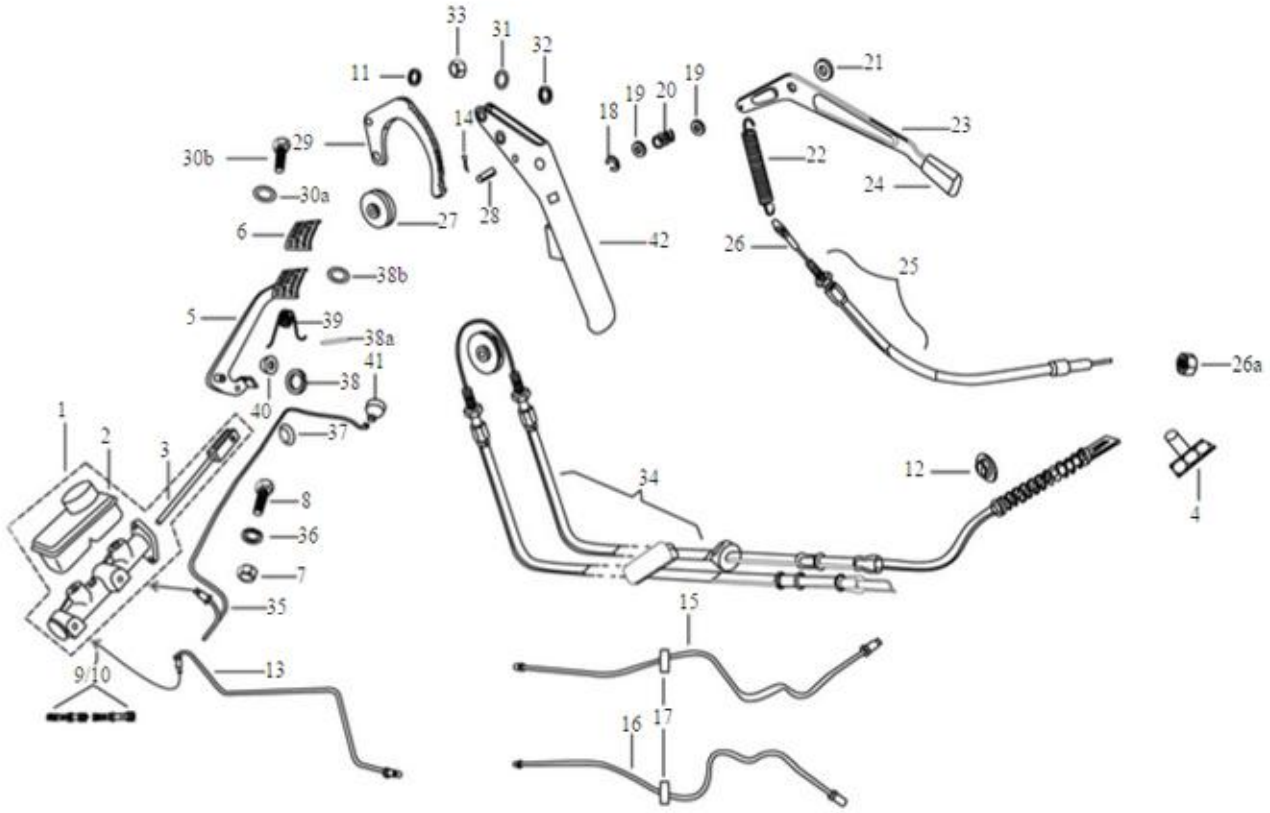
33
31
32
11
21
19
20
19
18
14
23
30b
29
22
24
30a
27
28
6
42
26
25
38b
5
39
38a
41
26a
38
40
1
37
2
3
12
34
8
4
36
7
35
15
9/10
13
16
17

77

Print Date: 27-Mar-2022

PLATE-29

BRAKE - TANDEM MASTER CYLINDER, BRAKE PIPE AND HAND BRAKES

Fig. No.	Part No.	Description	Qty	Remarks
33	20108	HEX NUT M8	1	
34	567719	CABLE,HAND BRAKE CONTROL ASSLY	1	
35	568161	TUBE BETWEEN TMC & FRT WHEEL	1	
36	016408	SPRING WASHER	2	
37	6414	CIRCLIP DIA. 14 (EXT)	1	
38	843000809	CIRCLIP DIA.8(EXT) TYPE C	1	
38A	567920	SPLIT PIN	1	
38A	568737	SPLIT PIN 4 X 25 (821 0425 2 2)	1	
38B	3058	PLAIN WASHER 15X8.4X1.5	1	
39	587928	FOOT BRAKE PEDAL SPRING	1	
40	229524	WASHER 21X14.3X2	1	
41	138237	CAP	1	
42	567746G1	HAND BRAKE LEVER (WITH POWDER COATING)	1	

78

Print Date: 27-Mar-2022

PLATE-30
ELECTRICAL DEVICES-1

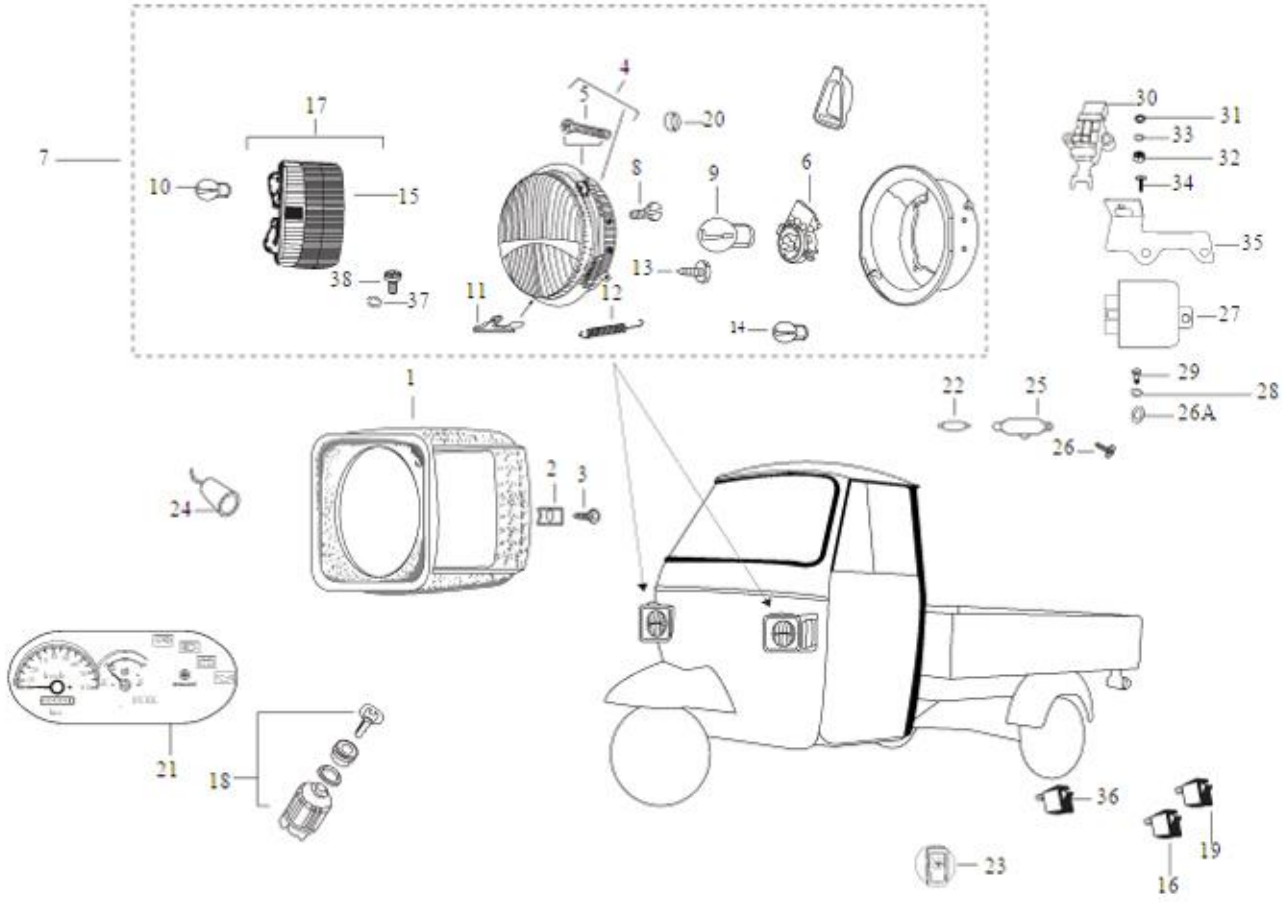
7
17
10
15
38
37
4
5
20
8
9
6
13
11
12
14
30
31
33
32
34
35
27
29
28
26A
22
25
26
1
2
3
24
21
18
36
19
16
23

79

Print Date: 27-Mar-2022

PLATE-30

ELECTRICAL DEVICES-1

Fig. No.	Part No.	Description	Qty	Remarks
1	B025600	SEAT OF LAMP RIGHT	1	
1	B025601	SEAT OF LAMP LEFT	1	
2	8080	SPRING PLATE	2	
3	15900	HEAD LAMP SECURING SCREW/PAN SELF TAP SCREW	2	
4	925590	HEAD LAMP SEAL BEAM WITH HOLE	4	
5	15641	HEAD LAMP ADJUSTING SCREW	4	
6	114121	BULB HOLDER / HOLDER FRONT LAMP	2	
7	632478R	ASSY. HEAD LAMP WITH LATERAL LAMP LH	1	
7	632477R	ASSY. HEAD LAMP WITH LATERAL LAMP RH	1	
8	8432	SCREW	2	
8	15900	HEAD LAMP SECURING SCREW/PAN SELF TAP SCREW	3	
9	219528	BULB 12V 35/35W	2	
10	925581	INDICATOR LIGHT BULB 12V 21W AMBER COLOUR	2	
11	119735	PROTECTION SECURING SPRING/SPR. FOR PROTECTION	4	
12	127179	SPRING FOR HEAD LAMP / SPRING	2	
13	15900	HEAD LAMP SECURING SCREW/PAN SELF TAP SCREW	6	
14	567593	BULB 12V 5W / LAMP 4W	2	
15	925579	H.L. LATERAL LAMP LENSE RH - NEOLITE	1	
15	925580	H.L. LATERAL LAMP LENSE LH - NEOLITE	1	
15	925578	H.L. LATERAL LAMP LENSE LH - LUMAX	1	
15	925577	H.L. LATERAL LAMP LENSE RH - LUMAX	1	
16	587670R	SWITCH 3 POSITION	1	
17	925587	LATERAL LAMP ASSY. RH (NEOLITE)	1	
17	925597	LATERAL LAMP ASSY. LH (NEOLITE)	1	
17	925588	LATERAL LAMP ASSY. RH (LUMAX)	1	
17	925598	LATERAL LAMP ASSY. L H (LUMAX)	1	
18	643502	LOCK SET WITH KEYS (PASS) (COMMON KEY)	1	
18	B024739	STARTER/IGN SWITCH ASSLY WITH KEY PLASTIC	1	
19	587974R	WIPER MOTOR SWITCH/ SWITCH WIPER MOTOR	1	
20	119975	GROMMET	2	
21	B001556R	INSTRUMENT CLUSTER WITH SHIFTED SPEEDOME	1	
22	71633	STOP AND PARKING BULB 12V 10/5 W	1	
23	660826R	HAZARD WARNING SWITCH WITH CROWN CAP (12V)(VE)	1	
24	645153R	MOBILE CHARGER SOCKET	1	
25	150041R	CABIN LIGHT ASSY. (W/O BULB)	1	

80

Print Date: 27-Mar-2022

PLATE-30
ELECTRICAL DEVICES-1

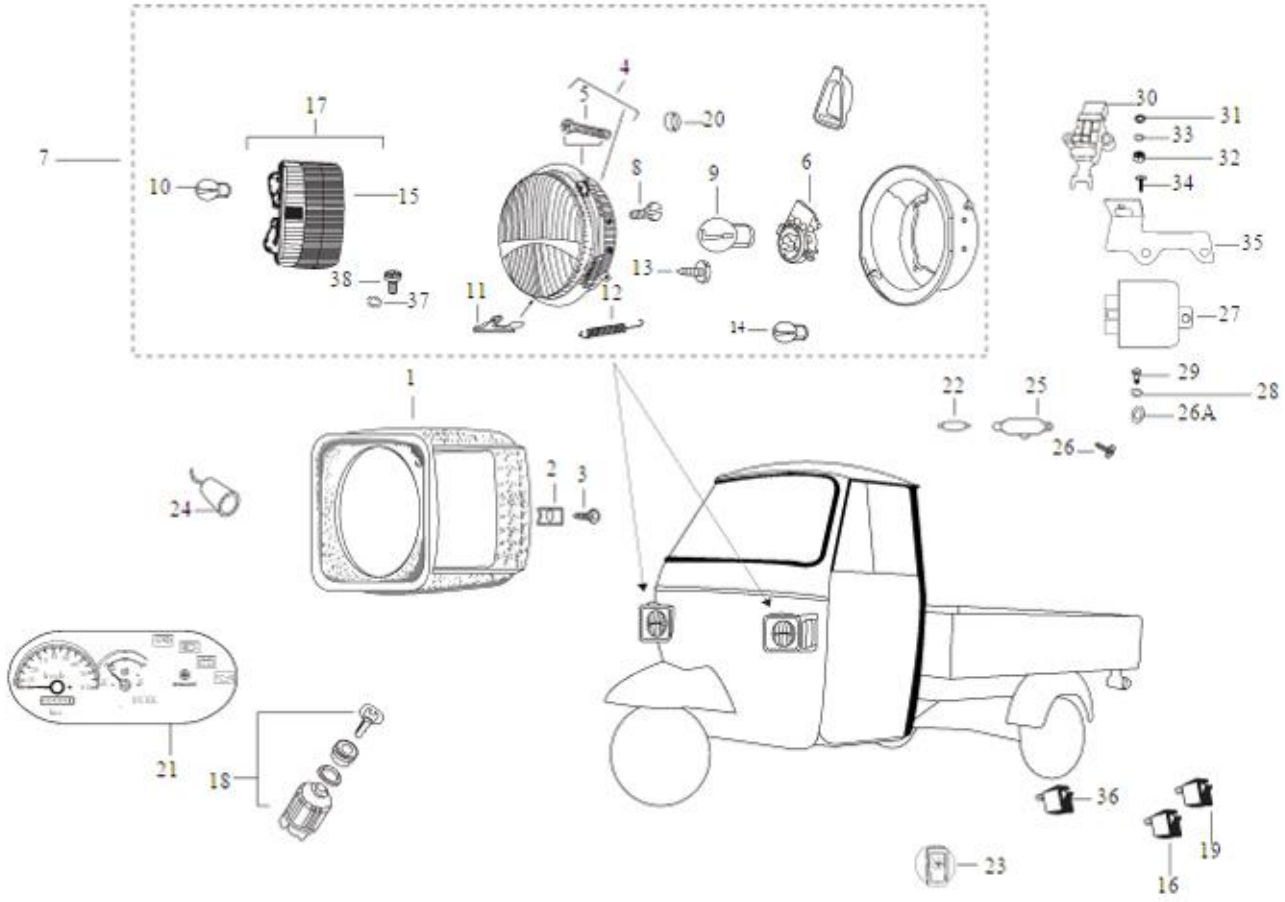
7
17
10
15
38
37
4
5
20
8
9
6
13
11
12
14
30
31
33
32
34
35
27
29
28
26A
22
25
26
1
2
3
24
21
18
36
19
16
23

81

Print Date: 27-Mar-2022

PLATE-30
ELECTRICAL DEVICES-1

Fig. No.	Part No.	Description	Qty	Remarks
26	15727	PAN SELF TAPPING SCREW	4	
26A	003054	PLAIN WASHER	4	
27	B023726R	REMOTE CONTROL SWITCH	1	
28	3056	PLAIN WASHER M6 OD12	1	
29	31088	HEX HD SCREW M6 X 16 CL 8.8 (811061623)	1	
30	B002101	STARTER SAFETY SWITCH ASSLY.	1	
31	016404	SPRING WASHER M4	2	
32	20104	HEX NUT M4	2	
33	003054	PLAIN WASHER	4	
34	B001503	PHILP RD HD SCREW (M4 X 20)	2	
35	B002101	STARTER SAFETY SWITCH ASSLY.	1	
36	B023727R	CONTACTOR	1	
37	3055	PLAIN WASHER M5	2	
38	661925	PHILIP PAN HEAD SCREW (M5 X 0.8 X 1.6)	4	

82

Print Date: 27-Mar-2022

PLATE-31
ELECTRICAL DEVICES-2

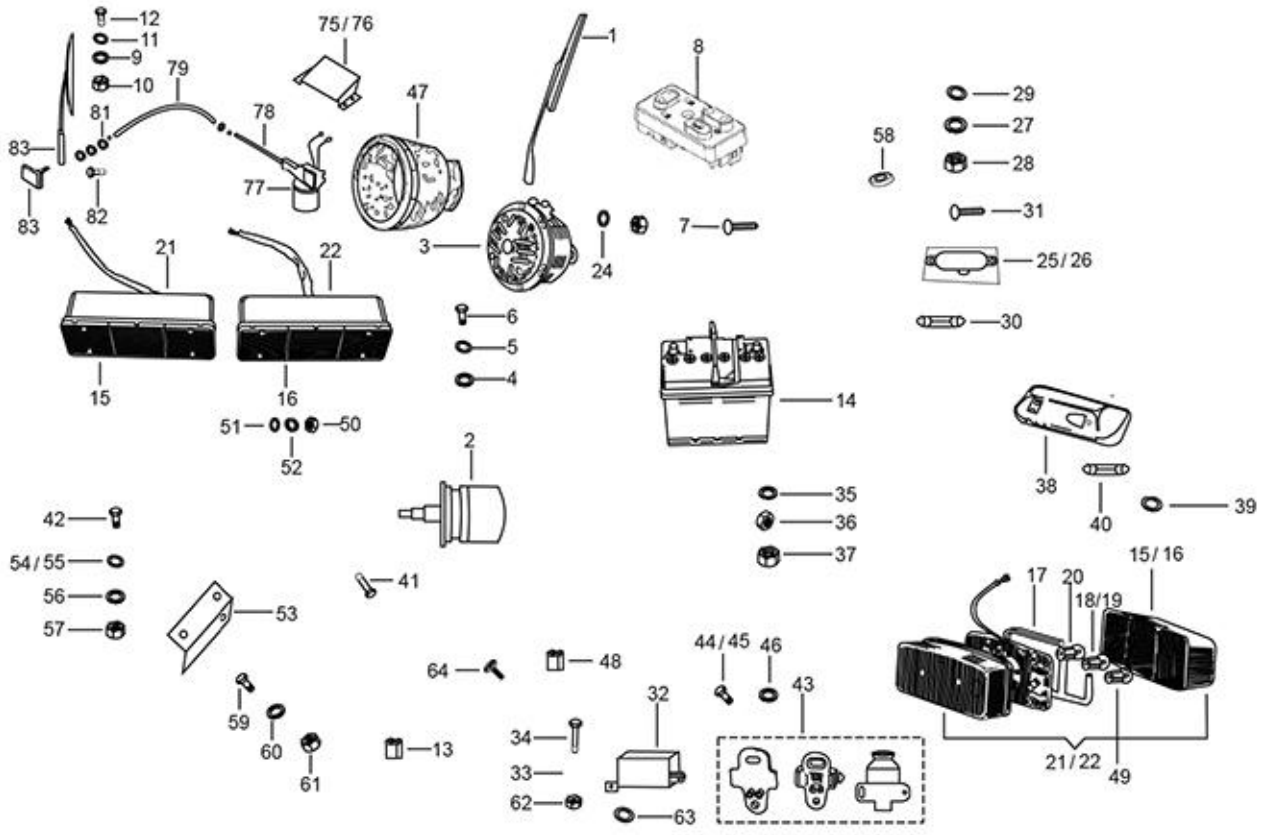
12
11
9
10
79
81
83
83
82
78
77
75/76
47
1
8
29
27
28
58
31
25/26
30
7
3
24
21
22
6
5
4
15
16
14
51
50
52
2
38
40
39
35
36
37
42
54/55
56
57
53
41
17
20
18/19
15/16
44/45
46
43
64
48
32
59
60
61
13
34
33
62
63
21/22
49

83

Print Date: 27-Mar-2022

PLATE-31
ELECTRICAL DEVICES-2

Fig. No.	Part No.	Description	Qty	Remarks
1	632292	WIPER ARM & BLADE ASSY	1	
2	632995	WIPER MOTOR ASSY. WITH MTG. BKT.	1	
2	B076574	WIPER MOTOR ASSY. WITH MTG. BKT. (N.I.)	1	BSIV
3	B04100R	HORN 3 WH _ E MARK	1	
4	016408	SPRING WASHER	1	
5	3058	PLAIN WASHER 15X8.4X1.5	1	
6	31116	HEX HD. SCREW M8X16	1	
7	15640	SCREW SECURING SWITCH	1	
8	B073850R	HBS (ST. BUTTON) - CITY UPGRADE (NEW) _ALL NUOVO MODEL	1	FOR PUSH BUTTON_HBS
9	016406	SPRING WASHER	6	
10	20106	HEX NUT M6	6	
11	3056	PLAIN WASHER M6 OD12	6	
12	31088	HEX HD SCREW M6 X 16 CL 8.8 (811061623)	6	
13	604557	FUSE (10A)	6	
14	587650R	BATTERIES FOR 3WH (50AH)	1	Domestic
14	B006806	BATTERY(EXIDE _ EK 50 L)_ EXPORT (501)	1	Export
15	920083	TAIL LAMP LENSE LH WITH HARDWARE & GASKET	13	
16	920084	TAIL LAMP LENSE RH WITH HARDWARE & GASKET	1	
17	925212	PACKING	1	
18	181746	INDICATOR BULB 12V 10W	2	
19	925581	INDICATOR LIGHT BULB 12V 21W AMBER COLOUR	2	
20	567700	BULB 10/5W (STOP LIGHT)	2	
21	643704R	TAIL LAMP ASSY. LH	1	E - Marked (Export)
22	643705R	TAIL LAMP ASSY. RH	1	E - Marked (Export)
23	925571	CABLE RACK (033200/PGO)	1	
24	016408	SPRING WASHER	1	
26	643616	CABIN LAMP (N.I.)	1	
27	016406	SPRING WASHER	2	
28	20106	HEX NUT M6	2	
29	3056	PLAIN WASHER M6 OD12	2	
30	71633	STOP AND PARKING BULB 12V 10/5 W	1	
31	15727	PAN SELF TAPPING SCREW	2	
32	B023727R	CONTACTOR	1	
33	12546	PLAIN WASHER / MULTI TOOTH LOCK WASHER M5	2	
34	31057	HEX HEAD SCREW M5 X 14 CL 8.8	2	

84

Print Date: 27-Mar-2022

PLATE-31
ELECTRICAL DEVICES-2

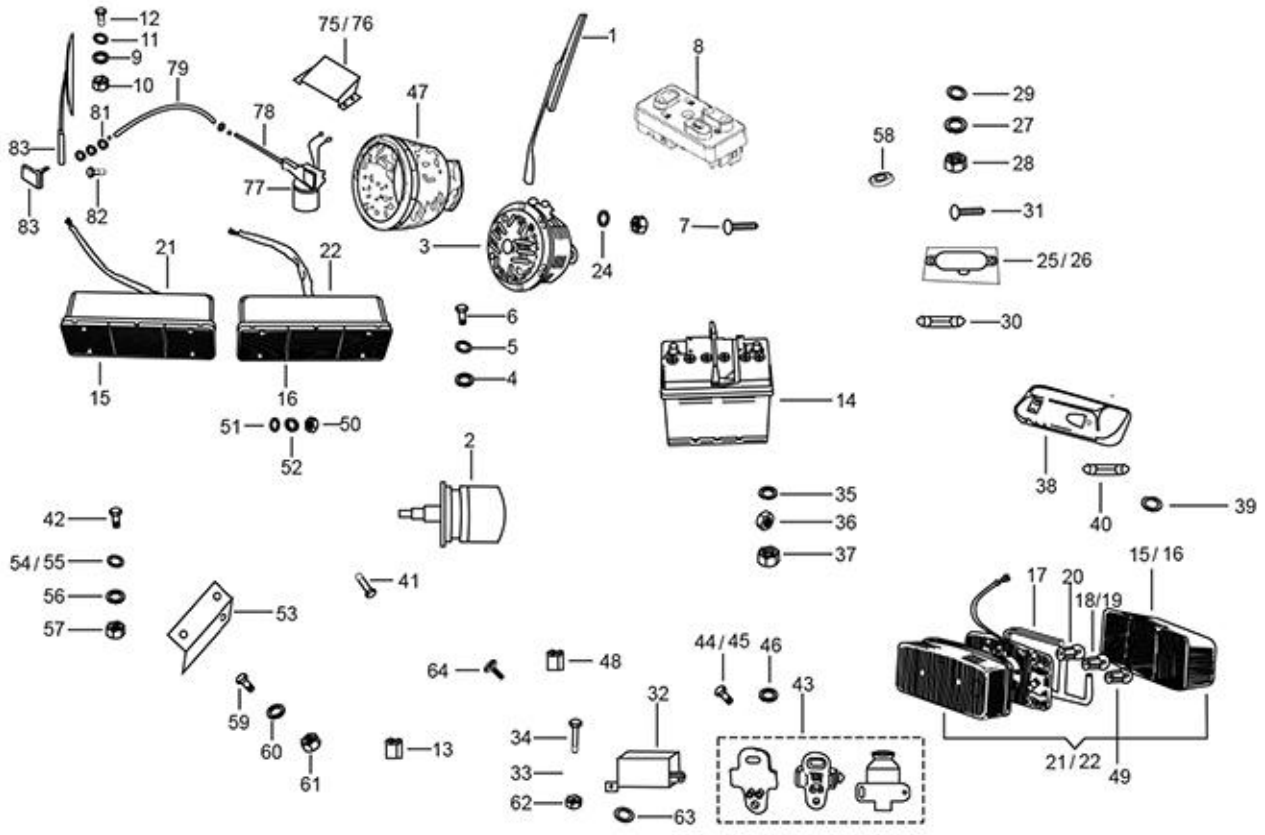
12
11
9
10
79
75/76
47
1
8
29
27
28
31
25/26
30
58
81
78
83
77
82
83
21
22
3
24
7
6
5
4
15
16
14
51
50
52
2
38
40
39
35
36
37
42
54/55
56
57
41
53
15/16
17
20
18/19
44/45
46
43
64
48
32
59
60
61
13
34
33
62
63
21/22
49

85

Print Date: 27-Mar-2022

PLATE-31
ELECTRICAL DEVICES-2

Fig. No.	Part No.	Description	Qty	Remarks
35	3055	PLAIN WASHER M5	2	
36	20105	PLAIN NUT M5	2	
37	20108	HEX NUT M8	1	
38	150915R	REGISTRATION PLATE LAMP ASSY	1	E - Marked (Export)
39	12536	SPRING WASHER	1	
40	71633	STOP AND PARKING BULB 12V 10/5 W	1	
41	8451	PAN SELF TP SCREW 6 SGX13 AB	2	
42	31058	HEX HEAD SCREW M5 X 16 CC8.8	2	
43	567498R	BRAKE/REVERSE LIGHT SW (INTEGRAL CAP)-PAV	1	
44	568750	PLAIN RDHD SCREW M4 X 16	2	
45	15996	PHIL RD HD SCREW M4X12	2	
46	003054	PLAIN WASHER	2	
47	645041	HORN PROTECTION	1	
48	567706	FUSE 30 A	1	
49	181747	REVERSE LAMP BULB 12V 5W	2	
50	12136	NUT / NYLOCK NUT M5	2	
51	6078	PLAIN WASHER 12 X 5.2 X 1	2	
52	16405	SPRING WASHER M5	2	
53	660109	FUSE BOX BKT	1	
54	3055	PLAIN WASHER M5	4	
55	6078	PLAIN WASHER 12 X 5.2 X 1	4	
56	6965	SPRING WASHER DIA 5	2	
57	20105	PLAIN NUT M5	2	
58	77055	RING	1	
59	31056	HEX HEAD SCREW M5 X 12 CL. 8.8	2	
60	6965	SPRING WASHER DIA 5	2	
61	20105	PLAIN NUT M5	1	
62	20105	PLAIN NUT M5	1	
63	3055	PLAIN WASHER M5	1	
64	15911	PAN SELF TAP SCREW 8SG X 16 AB	1	
65	925567	GEAR PLATE ASSLY (034500/4)	1	
66	569165	DOME NUT	1	
67	B009290	STRAP ASSY.	1	
68	568714	BATTERY COVER	1	
69	661231	CIRCLIP STEERING LOCK DIA 16 (INT)	1	

86

Print Date: 27-Mar-2022

PLATE-31
ELECTRICAL DEVICES-2

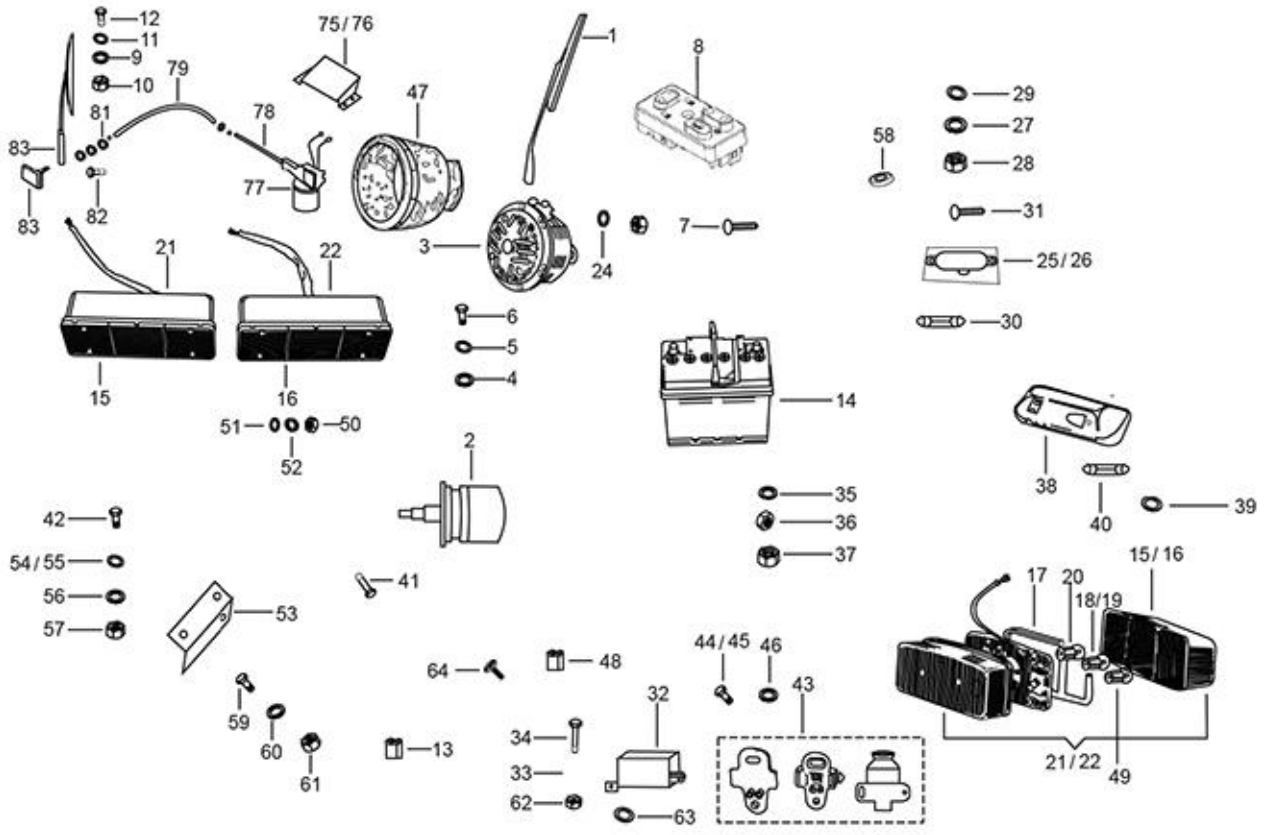
12
11
9
10
79
75/76
47
1
8
29
27
28
31
25/26
30
58
81
78
83
77
82
83
21
22
3
24
7
6
5
4
15
16
14
51
50
52
2
38
40
39
35
36
37
42
54/55
56
57
41
53
17
20
18/19
15/16
44/45
46
43
64
48
32
59
60
61
13
34
33
62
63
21/22
49

87

Print Date: 27-Mar-2022

PLATE-31

ELECTRICAL DEVICES-2

Fig. No.	Part No.	Description	Qty	Remarks
70	925584	BULB 12 V 21W CLEAR (PARKING AND INDICATOR)	1	
71	925585	LENS MOUNTING SCREW FOR LATERAL LAMP - NEOLITE MAKE	1	
72	925589	LENSE MOUNTING SCREW (N.I.)	1	
73	925605	TAIL LAMP GLASS - RH (LUMAX)	1	
74	925604	TAIL LAMP GLASS - LH (LUMAX)	1	
75	569166	WIPER MOTOR MOUNTING BRACKET	1	
76	632995	WIPER MOTOR ASSY. WITH MTG. BKT.	1	
77	604506	BUNDY TUBE OUTER	1	
78	632285	BUNDY TUBE (MOTOR TO WHEEL BOX)	1	
79	604506	BUNDY TUBE OUTER	1	
79	B076573	BUNDY TUBE (MOTOR TO WHEEL BOX)	1	BSIV
80	569197	WHEEL BOX ASSY. (MOD.)	1	
80	B076304	WHEEL BOX ASSY. (MOD.)	1	BSIV
81	003054	PLAIN WASHER	2	
82	661925	PHILIP PAN HEAD SCREW (M5 X 0.8 X 1.6)	4	
83	925572	BRUSH CARD ASSLY (033300/PGO)	1	

88

Print Date: 27-Mar-2022

PLATE-32

PASSENGER AUTO RICKSHAW BODY

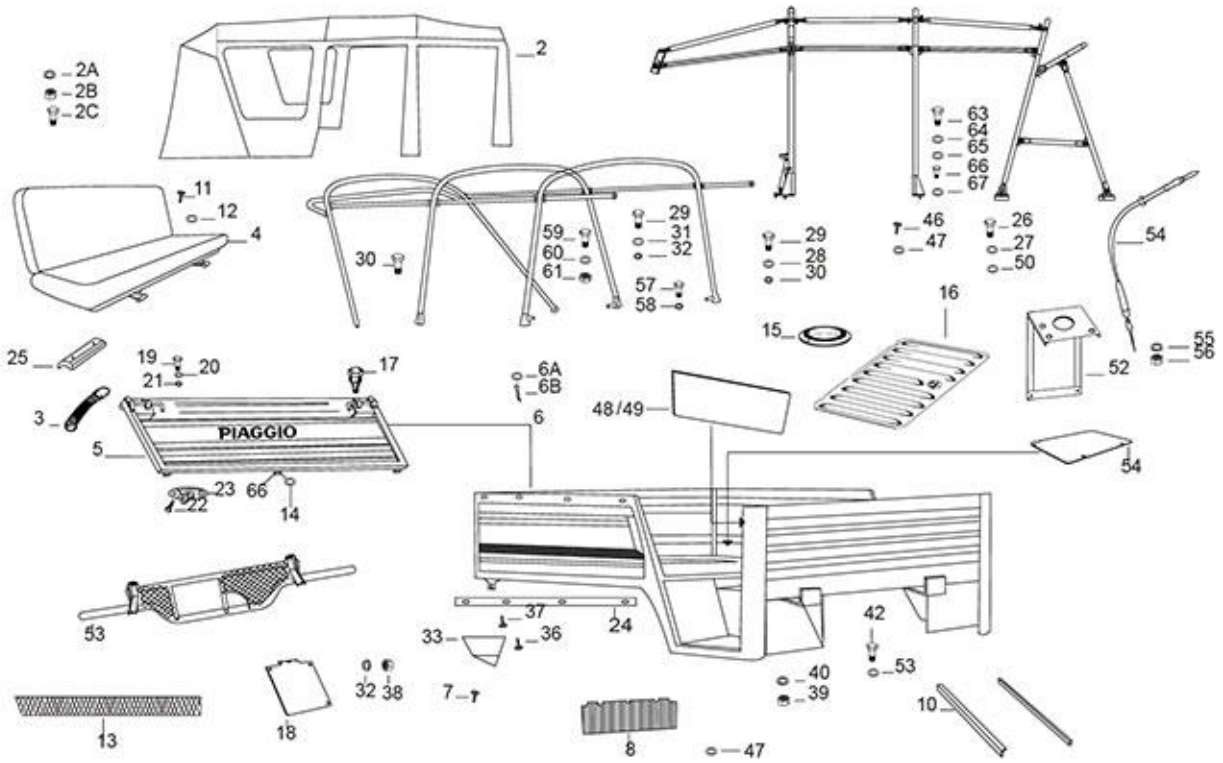
2A
2B
2C
2
63
64
65
66
67
11
12
4
29
31
32
59
60
61
30
57
58
29
28
30
46
47
26
27
50
54
16
15
25
19
20
21
17
6A
6B
3
PIAGGIO
5
6
48/49
52
55
56
54
23
22
66
14
53
37
36
33
24
42
53
40
39
32
38
7
18
13
8
47
10

89

Print Date: 27-Mar-2022

PLATE-32

PASSENGER AUTO RICKSHAW BODY

Fig. No.	Part No.	Description	Qty	Remarks
1	KIT95058R	HOOD FRAME ASSY. WITH PROFILE 501 BSIII	1	NI
2	B075269	SOFT TOP YELLOW	1	
2	B077474	SOFT TOP BLACK	1	
2A	016408	SPRING WASHER	8	
2B	20108	HEX NUT M8	4	
2C	31116	HEX HD. SCREW M8X16	4	
3	587907	BELT,PASSENGER SEAT RETAINER	2	
4	B075444	PASS. SEAT ASSLY (WIRE MESH)	1	
5	B042726ED	REAR HATCH WITH LATCH BOLT PASS DTL-CED	1	
6	B073327BY	PASSENGER BODY WITH TAILGATE CNG/LPG DTL 40VX	1	
6	B073327EG	PASSENGER BODY WITH TAILGATE CNG/LPG DTL 40VX	1	
6A	3057	PL. WASHER 13 X 7 X 1	1	
7	9000	SELF TAP SCREW 4 SG X 13 AB3	6	
8	661493	PASSENGER COMPARTMENT CARPET (UPGRADE)	1	
9	013880	PLAIN WASHER	4	
10	587962	PROFILE	2	
11	15996	PHIL RD HD SCREW M4X12	8	
12	003054	PLAIN WASHER	16	
13	661262	YELLOW REFLECTIVE TAPE	1	
14	12138	NYLOCK NUT M6	4	
15	B024501	PLASTIC COVER PLUG-CARGO	1	
16	660207ED	ENGINE INSPECTION DOOR 501 CNG/LPG	1	
17	567732	BUFFER	2	
18	643661	LICENSE PLATE MTG. BKT.	1	
19	31119	HEX HD SCREW M8 X 25	2	
20	3058	PLAIN WASHER 15X8.4X1.5	2	
21	016408	SPRING WASHER	2	
22	8432	SCREW	14	
23	587948	BKT. FOR HANDLE (N.I.)	7	
24	643752	LATERAL PROFILE FOR COVER	1	
25	568275	RUBBER STOP	4	
26	31118	SCREW M8X20	4	
27	3058	PLAIN WASHER 15X8.4X1.5	4	
28	016408	SPRING WASHER	4	
29	31088	HEX HD SCREW M6 X 16 CL 8.8 (811061623)	14	

90

Print Date: 27-Mar-2022

PLATE-32
PASSENGER AUTO RICKSHAW BODY

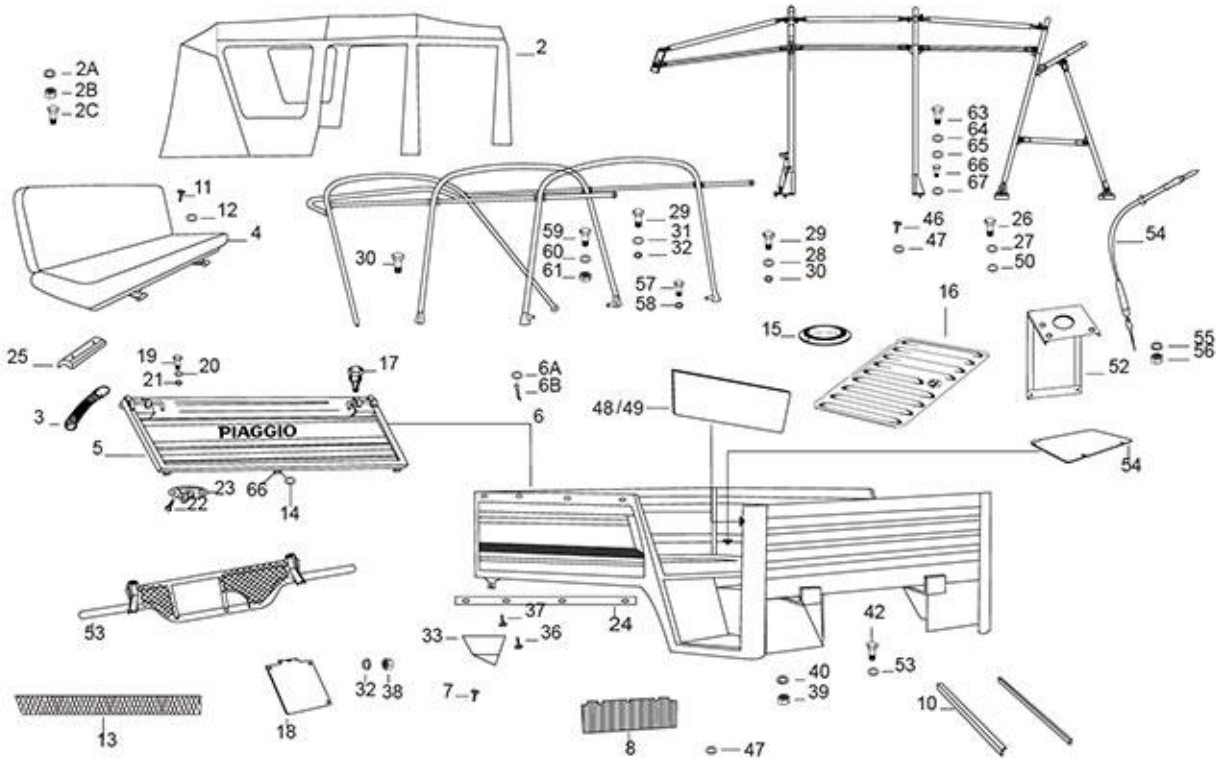
2A
2B
2C
2
63
64
65
66
67
11
12
4
29
31
32
59
60
61
30
57
58
29
28
30
46
47
26
27
50
54
16
15
25
19
20
21
17
6A
6B
52
55
56
3
PIAGGIO
5
6
48/49
54
23
22
66
14
53
37
36
33
24
42
53
40
39
32
38
7
10
13
18
8
47

91

Print Date: 27-Mar-2022

PLATE-32

PASSENGER AUTO RICKSHAW BODY

Fig. No.	Part No.	Description	Qty	Remarks
30	031090	HEXAGONAL SCREW	2	
31	3056	PLAIN WASHER M6 OD12	32	
32	016406	SPRING WASHER	18	
33	B073274	REAR PANEL RH (PLASTIC)	1	
34	20106	HEX NUT M6	1	
35	B073275	REAR PANEL LH (PLASTIC)	1	
36	15911	PAN SELF TAP SCREW 8SG X 16 AB	12	
37	14628	CSK SELF TP.SCREW 6SG X 16 AB	28	
38	20106	HEX NUT M6	2	
39	20104	HEX NUT M4	8	
40	016404	SPRING WASHER M4	8	
41	B008400	LOCK SET WITH KEYS (PASSENGER) (N.I.)	1	
42	15900	HEAD LAMP SECURING SCREW/PAN SELF TAP SCREW	8	
43	3056	PLAIN WASHER M6 OD12	4	
44	31092	HEX. HD SCREW M6X25	4	
45	20108	HEX NUT M8	2	
46	15911	PAN SELF TAP SCREW 8SG X 16 AB	8	
47	16670	PLAIN WASHER 12X4.5X1	8	
48	567534	RIGHT FABRIC PROTECTION	1	
49	567535	LEFT FABRIC PROTECTION	1	
50	16670	PLAIN WASHER 12X4.5X1	8	
51	B009701	PASS. SPACE REAR CARPET (V.E)	1	
52	568325	SUPPORT PLATE S/A FAREMETER	1	
53	643670	REAR VISUAL BARRIER ASSLY (VE)	1	
54	568107	FAREMETER CABLE ASSY (N.I.)	1	
55	016408	SPRING WASHER	2	
56	20108	HEX NUT M8	4	
57	30074	HEX HEAD BOLT M8 X 40 CL 8.8	2	
58	016408	SPRING WASHER	2	
59	31116	HEX HD. SCREW M8X16	2	
60	016408	SPRING WASHER	2	
61	20108	HEX NUT M8	2	
62	30074	HEX HEAD BOLT M8 X 40 CL 8.8	2	
63	14628	CSK SELF TP.SCREW 6SG X 16 AB	28	
64	3058	PLAIN WASHER 15X8.4X1.5	2	

92

Print Date: 27-Mar-2022

PLATE-32

PASSENGER AUTO RICKSHAW BODY

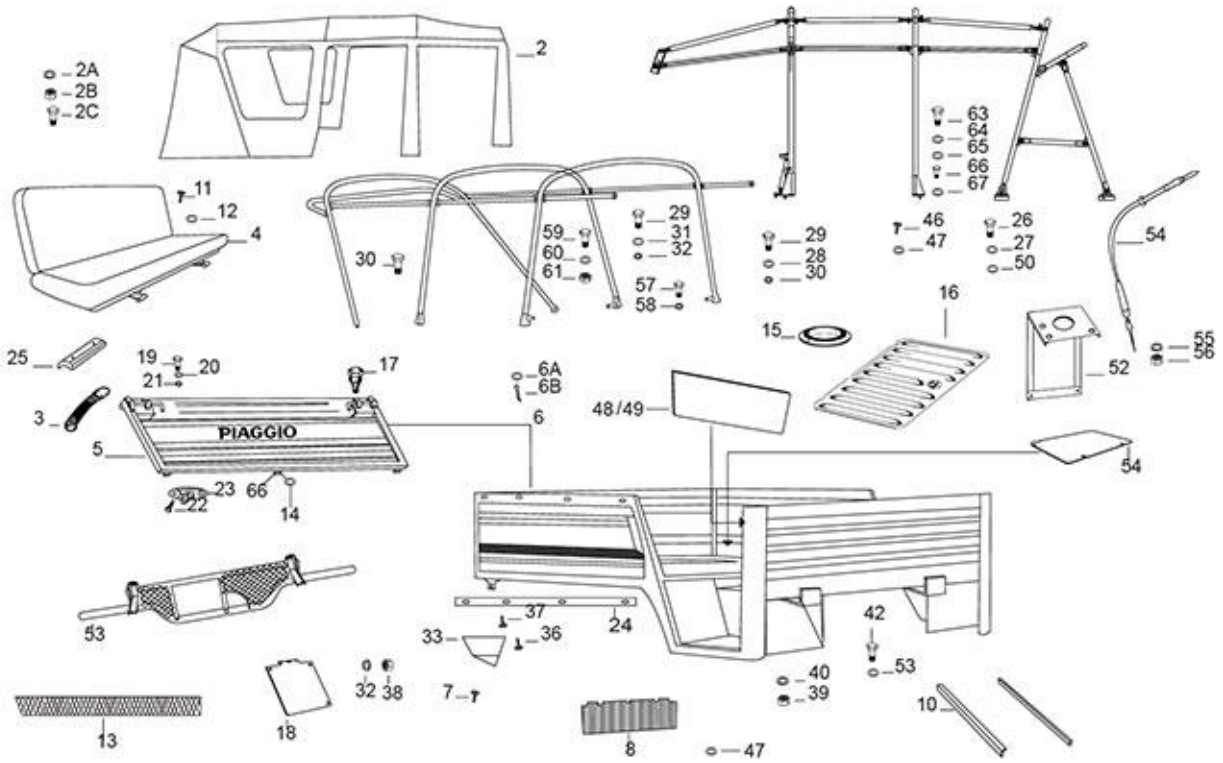
2A
2B
2C
2
63
64
65
66
67
11
12
4
29
31
32
59
60
61
30
57
58
29
28
30
46
47
26
27
50
54
16
15
25
19
20
21
17
6A
6B
52
55
56
3
PIAGGIO
5
6
48/49
54
23
66
22
14
53
37
36
33
24
42
53
40
39
32
38
7
10
13
18
8
47

93

Print Date: 27-Mar-2022

PLATE-32

PASSENGER AUTO RICKSHAW BODY

Fig. No.	Part No.	Description	Qty	Remarks
65	568135	WASHER(NI PLATED)	10	
66	8432	SCREW	49	
67	97756	METALLIC PLAIN WASHER	39	
68	31089	HEX HEAD SCREW M6X18 CL 8.8	2	
69	B009701	PASS. SPACE REAR CARPET (V.E)	1	NI

94

Print Date: 27-Mar-2022

PLATE-33
CABLE HARNESS

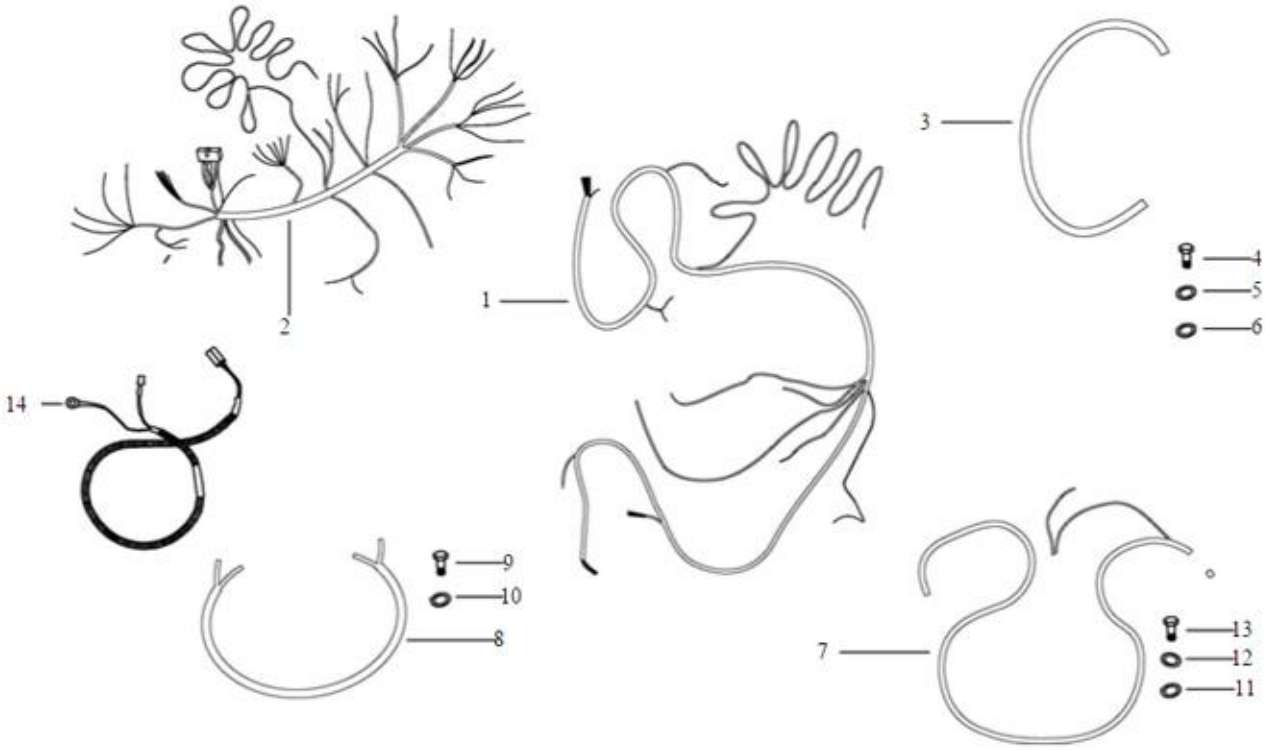
1
2
3
4
5
6
7
8
9
10
11
12
13
14

95

Print Date: 27-Mar-2022

PLATE-33
CABLE HARNESS

Fig. No.	Part No.	Description	Qty	Remarks
1	661454R	WIRING HARNESS FRAME (FOR S.S.SW)	1	
2	B075330	CABLE GROUP OF INST. PANEL WITH H/L CONN	1	
3	644838R	BATTERY CABLE -VE	1	
4	31088	HEX HD SCREW M6 X 16 CL 8.8 (811061623)	1	
5	3056	PLAIN WASHER M6 OD12	1	
6	016406	SPRING WASHER	1	
7	B074663	CABLE BATTERY +VE TO STARTER MOTOR	1	
8	567484	STARTER CABLE GROUP	1	
9	31116	HEX HD. SCREW M8X16	1	
10	3058	PLAIN WASHER 15X8.4X1.5	1	
11	016406	SPRING WASHER	1	
12	3056	PLAIN WASHER M6 OD12	1	
13	31088	HEX HD SCREW M6 X 16 CL 8.8 (811061623)	1	
14	B073320R	PIG TAIL- CABIN LAMP (NEW)-PASSENGER	1	
15	6D000409	KIT WIRING HARNESS - CNG	1	

96

Print Date: 27-Mar-2022

PLATE-34

FRONT BRAKE ASSEMBLY SELF ADJUSTING (DIA 180 X 40 MM)

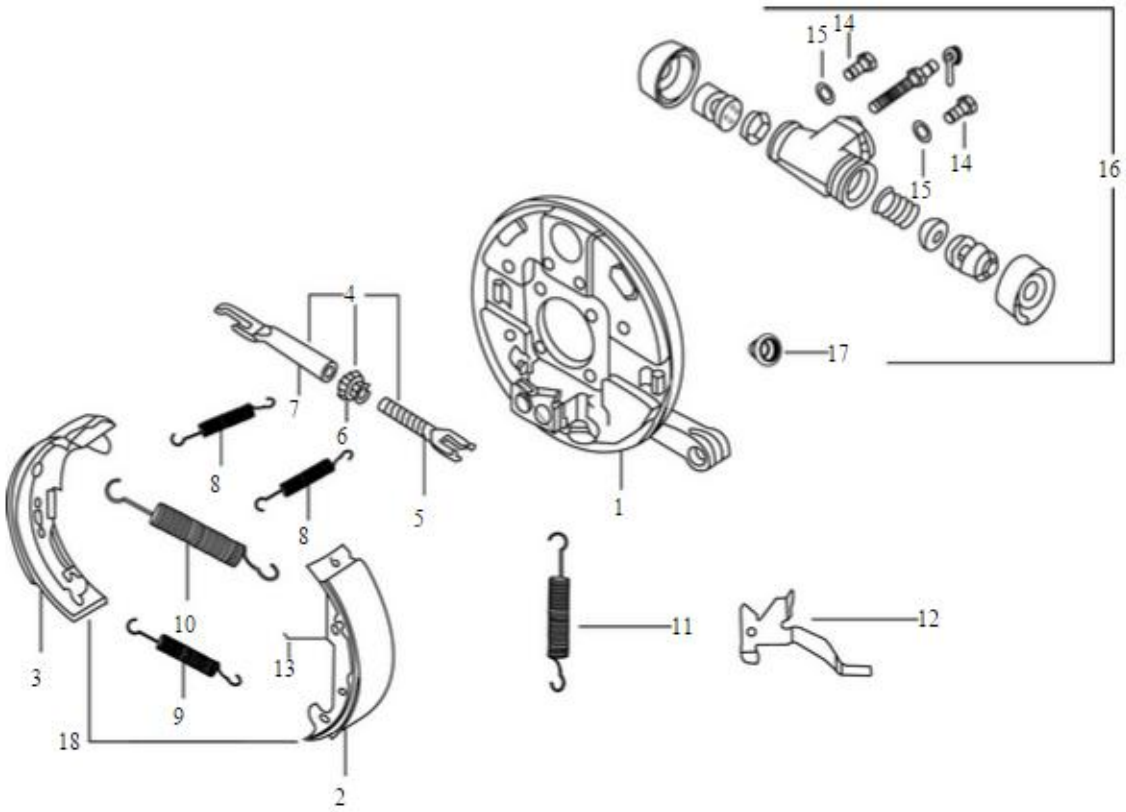
15
14
14
15
16
4
17
7
6
8
8
5
1
10
11
12
3
13
9
18
2

97

Print Date: 27-Mar-2022

PLATE-34

FRONT BRAKE ASSEMBLY SELF ADJUSTING (DIA 180 X 40 MM)

Fig. No.	Part No.	Description	Qty	Remarks
1	616541	BRACKET WHEEL CARRIER WITH PI	1	
2	B003784	LEADING SHOE COMP WITH PIN LH ANL 1643	1	
3	940004	FRONT BRAKE SHOE KIT COMPRISING OF 2 & 3	1	
4	179056	FORK ASSY LH	1	
5	178804	FORK FOR LH WHEEL	1	
6	178805	LH - GEAR	1	
7	178806	LH STRUT	1	
8	602497	JAWS STOP SPRINGS	2	
9	116088	SPRING SUPPORTING JAWS	1	
10	245038	SHOE RETURN SPRING	1	
11	178808	SPRING LEVER RETURN	1	
12	178807	LEVER LH	1	
13	178823	JUMPER LH	1	
13	178824	JUMPER	1	
14	63440	BOLT M6X12	2	
15	12536	SPRING WASHER	2	
16	587616	BRAKE CYLINDER FR ASSLY (DIA. 22.225)	1	
17	925501	CAP (KBX P 6450225)	1	
18	940004	FRONT BRAKE SHOE KIT COMPRISING OF 2 & 3	1	
19	925521	MINOR KIT WHEEL CYL. FRT (KBX 1007)	1	

98

Print Date: 27-Mar-2022

PLATE-35

REAR BRAKE ASSEMBLY SELF ADJUSTING (DIA 180 X 40 MM)

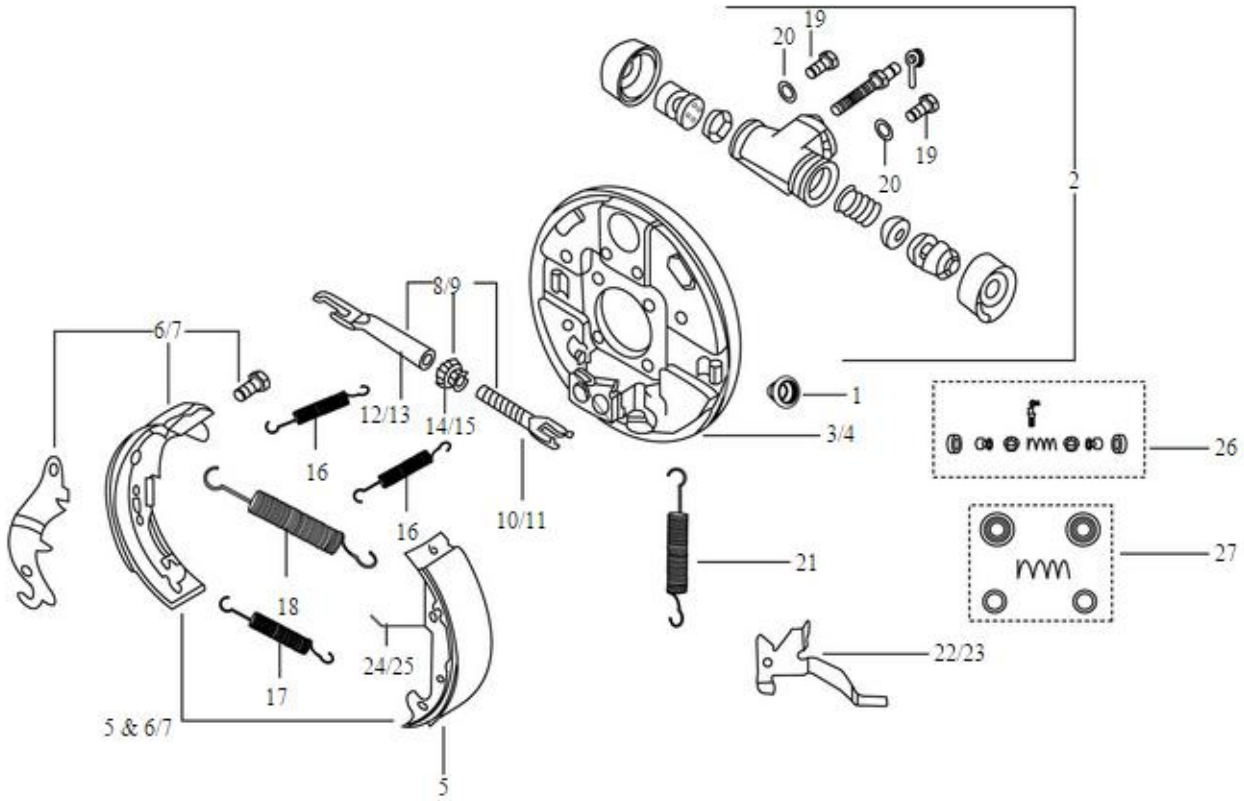
19
20
19
20
2
8/9
6/7
1
12/13
14/15
3/4
26
16
16
10/11
21
27
18
24/25
22/23
17
5 & 6/7
5

99

Print Date: 27-Mar-2022

PLATE-35

REAR BRAKE ASSEMBLY SELF ADJUSTING (DIA 180 X 40 MM)

Fig. No.	Part No.	Description	Qty	Remarks
1	925501	CAP (KBX P 6450225)	1	
2	632148	WHEEL CYLINDER ASSY. FRONT DIA. (25.4 MM)	1	
2	632148	WHEEL CYLINDER ASSY. FRONT DIA. (25.4 MM)	1	
3	602120	LEFT BRAKE JAW HOLDING CABLE PLATE	1	
4	602123	RIGHT BRAKE JAW HOLDING CABLE PLATE	1	
5	B003784	LEADING SHOE COMP WITH PIN LH ANL 1643	1	
6	940005	REAR BRAKE SHOE SET L/H COMPRISING OF 5 & 7	1	
7	940006	REAR BRAKE SHOE SET R/H. COMPRISING OF 5 & 8	1	
8	179056	FORK ASSY LH	1	
9	179057	FORK ASSY. RH	1	
10	178804	FORK FOR LH WHEEL	1	
11	178818	RH FORK	1	
12	178806	LH STRUT	1	
13	178820	RH STRUT	1	
14	178805	LH - GEAR	1	
15	178819	RH GEAR	1	
16	602497	JAWS STOP SPRINGS	2	
17	116088	SPRING SUPPORTING JAWS	1	
18	245038	SHOE RETURN SPRING	1	
19	63440	BOLT M6X12	2	
20	12536	SPRING WASHER	2	
21	178808	SPRING LEVER RETURN	1	
22	178807	LEVER LH	1	
23	178821	LEVER RH	1	
24	178823	JUMPER LH	1	
25	178824	JUMPER	1	
28	940005	REAR BRAKE SHOE SET L/H COMPRISING OF 5 & 7	1	
29	940006	REAR BRAKE SHOE SET R/H. COMPRISING OF 5 & 8	1	

100

Print Date: 27-Mar-2022

PLATE-36
VANAZ KIT - CNG

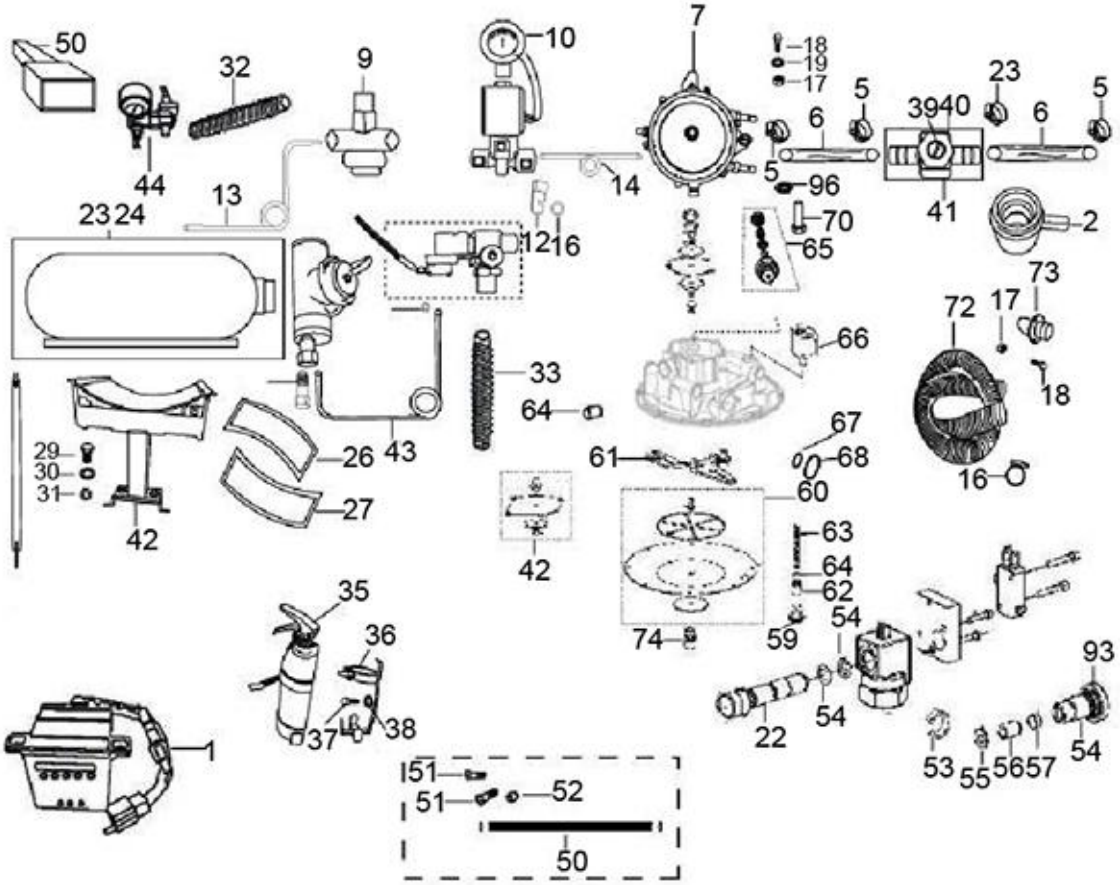
50
32
9
10
7
18
19
17
5
23
5
6
39
40
6
44
13
14
5
96
41
2
23
24
12
16
70
65
73
72
17
66
33
18
64
67
29
26
43
61
68
30
16
31
27
60
42
42
63
64
62
35
74
59
54
36
93
22
54
37
38
53
55
56
57
54
1
51
51
52
50

101

Print Date: 27-Mar-2022

PLATE-36

VANAZ KIT - CNG

Fig. No.	Part No.	Description	Qty	Remarks
1	6D000407	ECU WITH CNG LEVEL INDICATOR	1	NI
2	B009017	MIXER ASSEMBLY(VANAZ PT NO K-0122-23)	1	
3	643839	FILLER VALVE WITH REFUELLING UNIT(VANAZ	1	
4	643869	CLIP(K-0301-13-040)	4	
5	643843	LOW PRESS HOSE PIPE(VANAZ PT NO K-0107	2	
6	643844	FLOW CONTROL UNIT(VANAZ PT NO R-8101-08	1	
7	643846	3 STAGE REGULATOR(VANAZ PT NO R-8104)	1	
8	643847	HIGH PRESS SOLENOID VALVE(VANAZ PT NO K	1	
9	643848	JUNCTION BLOCK SUB ASSY(VANAZ PT NO K-0	1	
10	B041784	CNG PRESSURE GAUGE WITH SENSOR	1	
11	643859	TRANSIENT SUPPORT UNIT(VANAZ PT NO K-011	1	
12	643864	CLIP FOR COPPER TUBE(VANAZ PT NO K-0101-	6	
13	643906	HOSE FROM FILLER VALVE TO JUNCTION BLOCK	1	
14	643908	TUBE FROM SOLENOID VALVE TO PRESS REGUL	1	
15	925786	ECU - FUSE (2A) (N.I)	1	
16	661910	CLIP	2	
17	661908	HEX NUT (M5) (FERRULE (VANAZ P.NO.R-8101	3	
18	661909	CHEESE HEAD SCREW	3	
19	16670	PLAIN WASHER 12X4.5X1	6	
20	016404	SPRING WASHER M4	3	
21	20104	HEX NUT M4	3	
22	661399	DUST PLUG	1	
23	643708	CYLINDER WITH CNG VALVE	1	
24	B042657R	CNG CYLINDER M/S EKC WITH OMB VALVE	1	
25	B009290	STRAP ASSY.	2	
26	604856	RUBBER STRAP LOWER	2	
27	659857	RUBBER STRAP UPPER	2	
29	16410	SPRING WASHER	2	
30	016408	SPRING WASHER	12	
31	3058	PLAIN WASHER 15X8.4X1.5	12	
32	B042182	GAS VENT HOSE ASSLY	1	
33	B042183	PVC COATED STEEL TUBE ASSLY	1	
34	661758	TUBE FROM JUNCTION BLOCK TO SOLENOID VALK-0122-22	1	
35	643655R	FIRE EXTINGUISHER	1	
36	643598	EXTINGUISHER BKT ASSLY COMPLETE	1	

102

Print Date: 27-Mar-2022

PLATE-36
VANAZ KIT - CNG

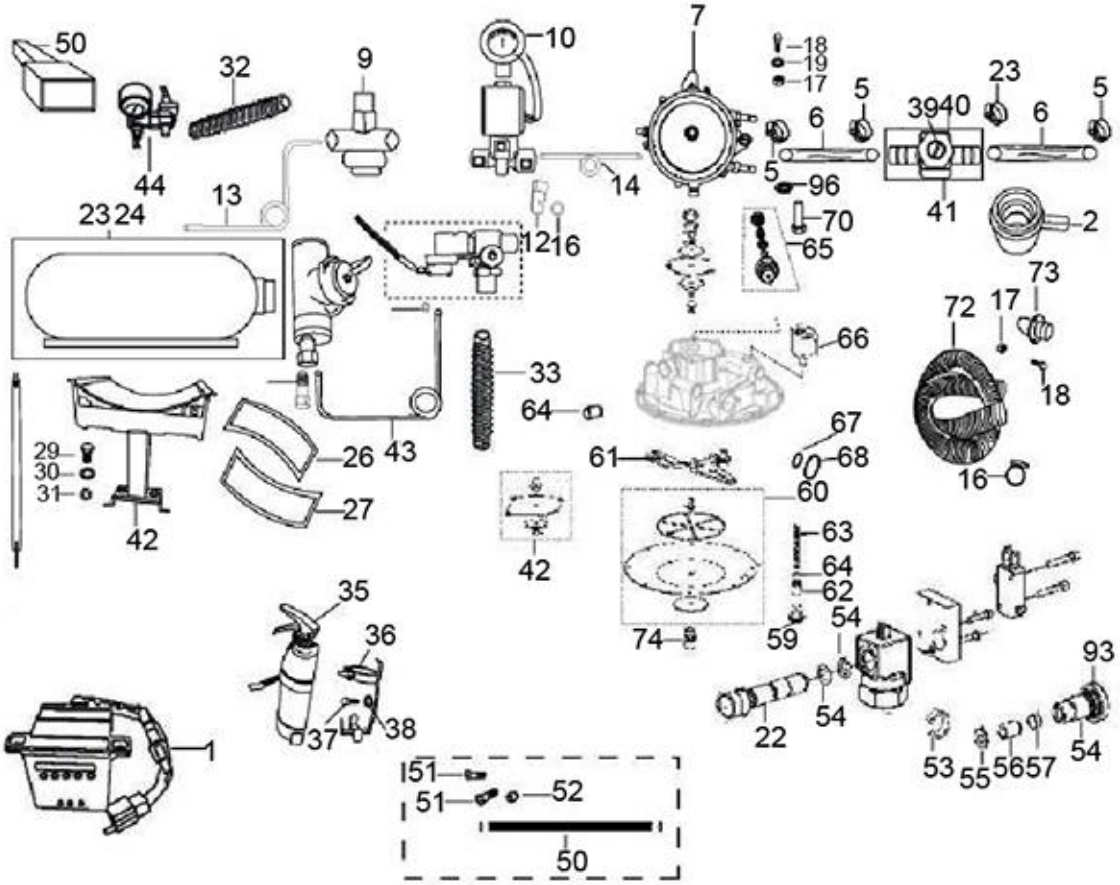
50
32
9
10
7
18
19
17
5
23
5
6
39
40
6
44
13
14
5
96
41
2
23
24
12
16
70
65
73
72
17
66
33
18
64
67
29
26
43
61
68
30
16
31
60
27
42
63
42
64
62
35
74
59
54
36
93
22
54
37
38
53
55
56
57
54
1
51
51
52
50

103

Print Date: 27-Mar-2022

PLATE-36
VANAZ KIT - CNG

Fig. No.	Part No.	Description	Qty	Remarks
37	31116	HEX HD. SCREW M8X16	2	
38	016408	SPRING WASHER	2	
39	925761	FLOWADIUSTING SCREW(K-0122-07-020)	1	
40	661916	LOCK NUT(R-8101-555)	1	
41	925760	FLOW CONTROL BODY(K-0122-07-010)	1	
42	659870	CENTRAL MTG BRACKET	2	
43	643998	TUBE ASSLY. CNG VALVE TO FILLER VALVE (	1	
44	B042179	REMOTE FILLER UNIT	1	
45	15996	PHIL RD HD SCREW M4X12	6	
46	643877	WIRING HARNESS LPG. (NI)	1	
47	660179	KIT WIRING HARNESS-CNG	1	
47	6D000409	KIT WIRING HARNESS - CNG	1	
49	925759	STEEL TUBE WITH PVC SHILDING(K-0122-01-0	1	
50	925759	STEEL TUBE WITH PVC SHILDING(K-0122-01-0	1	
51	925756	COUPLING SCREW(K-0113-01-020)	3	
52	925757	FERRULE(K-0113-300)	4	
53	925754	LOCK NUT(K0106-10-180)	1	
54	932242	ORING	1	
55	925751	FILTER(K-01-02-380)	1	
56	925752	WASHER(K-0102-02-390)	1	
57	925769	PAD(R-8101-430)	1	
58	925749	RETAINER(K-0102-02-360)	1	
59	925727	LOCK NUT (R-8104-11)	1	
60	925774	DIAPHRAGM SUB. ASSLY.(R-8104-08)	1	
61	925778	LEVER PIN(R-8104-200)	1	
62	925779	IDLINGSCREW(R-8104-220)	1	
63	925780	SPRING(R-8104-230)	1	
64	925781	O RING	1	
65	925776	SRV. SUB ASSLY.(R-8104-13)	1	
66	925785	SOLENOID VALVE (S-0102)	1	
67	925770	O-RING(R-8101-500)	1	
68	925783	O RING	1	
69	925751	FILTER(K-01-02-380)	1	
70	925772	SPRING GUIDE(R-81015-620)	1	
71	661825	PLUG	1	

104

Print Date: 27-Mar-2022

PLATE-36
VANAZ KIT - CNG

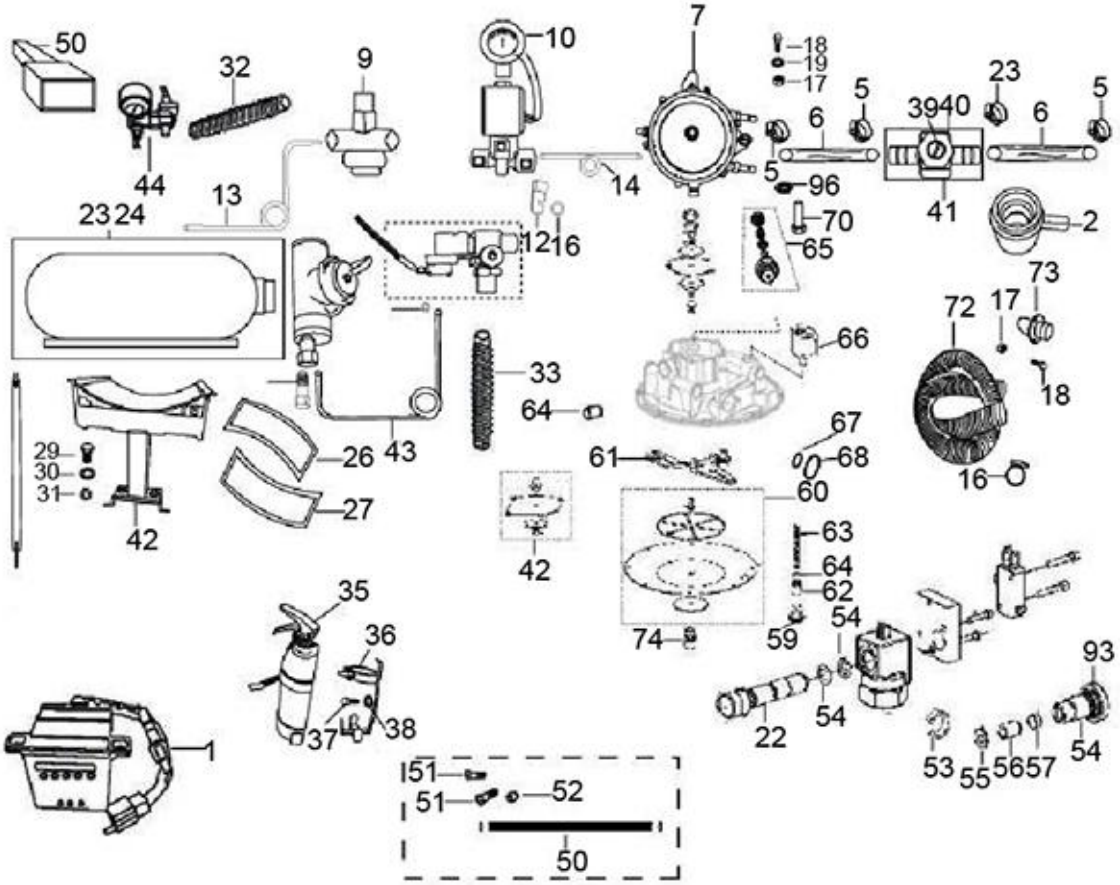
50
32
9
10
7
18
19
17
5
23
5
6
39
40
6
44
13
14
5
96
41
2
23
24
12
16
70
65
73
72
17
66
33
18
64
67
29
26
43
61
68
30
16
31
60
27
42
63
42
64
62
35
74
59
54
36
93
22
54
37
38
53
55
56
57
54
51
51
52
50

105

Print Date: 27-Mar-2022

PLATE-36

VANAZ KIT - CNG

Fig. No.	Part No.	Description	Qty	Remarks
72	661912	VENT HOSE(K-0401-19-010)	2	
73	661911	SPIGOT(VANAZ P.NO.K-0401-19-020)	2	
74	B001540	BREATHER ASSLY (VANAZ P/NO(R-8101-11)	1	

106

Print Date: 27-Mar-2022

PLATE-37
LPG-KIT

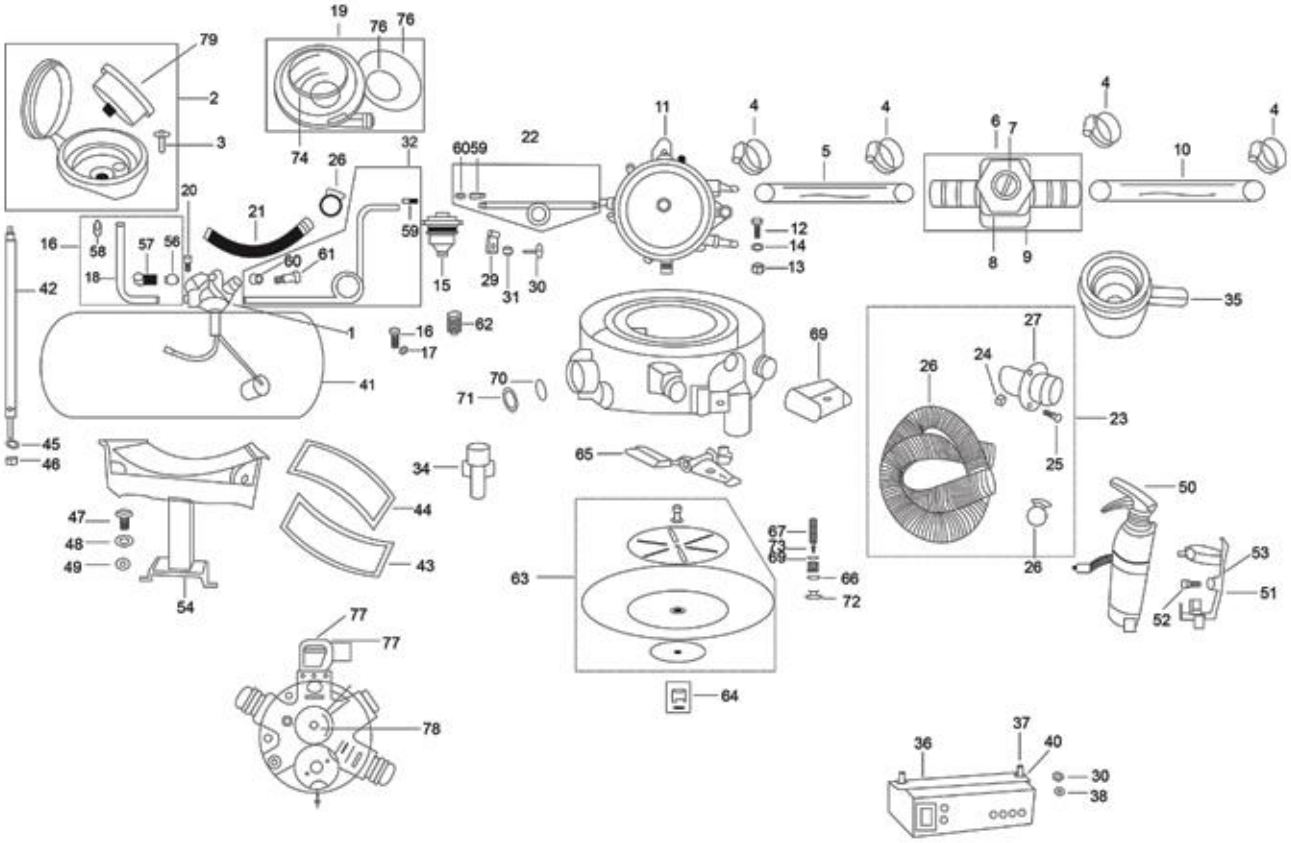
79
2
3
19
78
76
74
26
32
6059
22
11
4
4
5
6
7
4
10
4
20
21
59
12
14
13
16
58
57
56
18
60
61
15
29
31
30
8
9
42
35
1
16
17
62
69
27
24
26
23
41
70
71
25
45
46
65
34
50
44
47
48
49
43
67
73
69
66
72
63
26
53
51
52
54
77
77
64
78
36
37
40
30
38

107

Print Date: 27-Mar-2022

PLATE-37
LPG-KIT

Fig. No.	Part No.	Description	Qty	Remarks
1	B073083	MULTI FUNCTION VALVE	1	
2	925743	FILLER CONNECTOR WITH CAP	1	
3	-	SCREW FOR FILLER CONNECTOR CAP	2	
4	643869	CLIP(K-0301-13-040)	4	
5	643873	AUTO LPG HOSE-2(VANAZ PT NO K-0415-08)	1	
6	-	FLOW CONTROL UNIT(VANAZ PT NO K-0113-07)	1	
7	925761	FLOWADIUSTING SCREW(K-0122-07-020)	1	
8	661916	LOCK NUT(R-8101-555)	1	
9	661917	FLOW CONTROL BODY	1	
10	643873	AUTO LPG HOSE-2(VANAZ PT NO K-0415-08)	1	
11	920075	2 STAGE LPG REGULATOR	1	
12	-	BOLT FOR PRESS REGU MTG	4	
13	-	NUT FOR PRESS REG MTG(LPG)	4	
14	-	SPRING WASHER - PRESSURE REGU. MTG.	4	
15	925744	LPG FILTER(VANAZ PT NO K-0301-12)	1	
16	-	BOLT FOR LPG FILTER	1	
17	-	WASHER FOR LPG FILTER	1	
18	925740	COPPER TUBE ASSY FOR REFUELLING(VANAZ PT	1	
19	643883	SEAL BOX	1	
20	643884	ALLEN SCREW	6	
21	643912	COVER PIPE (FROM VALVE TO REAR WALL)	1	
22	643913	COPPER TUBE FROM FILTER TO REGULATOR	1	
23	643878	GAS VENT ASSLY(VANAZ PT NO K-0401-19)	1	
24	661908	HEX NUT (M5) (FERRULE (VANAZ P.NO.R-8101	3	
25	661909	CHEESE HEAD SCREW	3	
26	661910	CLIP	4	
27	661911	SPIGOT(VANAZ P.NO.K-0401-19-020)	1	
28	661912	VENT HOSE(K-0401-19-010)	2	
29	643864	CLIP FOR COPPER TUBE(VANAZ PT NO K-0101-	5	
30	-	SCREW FOR CLIP	4	
31	-	WASHER FOR CLAMP	4	
32	925746	COPPER TUBE ASSLY. (MFV TO FILTER)	1	
33	661735	COPPER TUBE ASSY- FILTER TO LPR	1	
34	661822	NOZZLE (VANAZ PT.NO.K-0415-210)	1	
35	B009122	MIXER ASSY(VANAZ PT NO K-0435-01)	1	

108

Print Date: 27-Mar-2022

PLATE-37
LPG-KIT

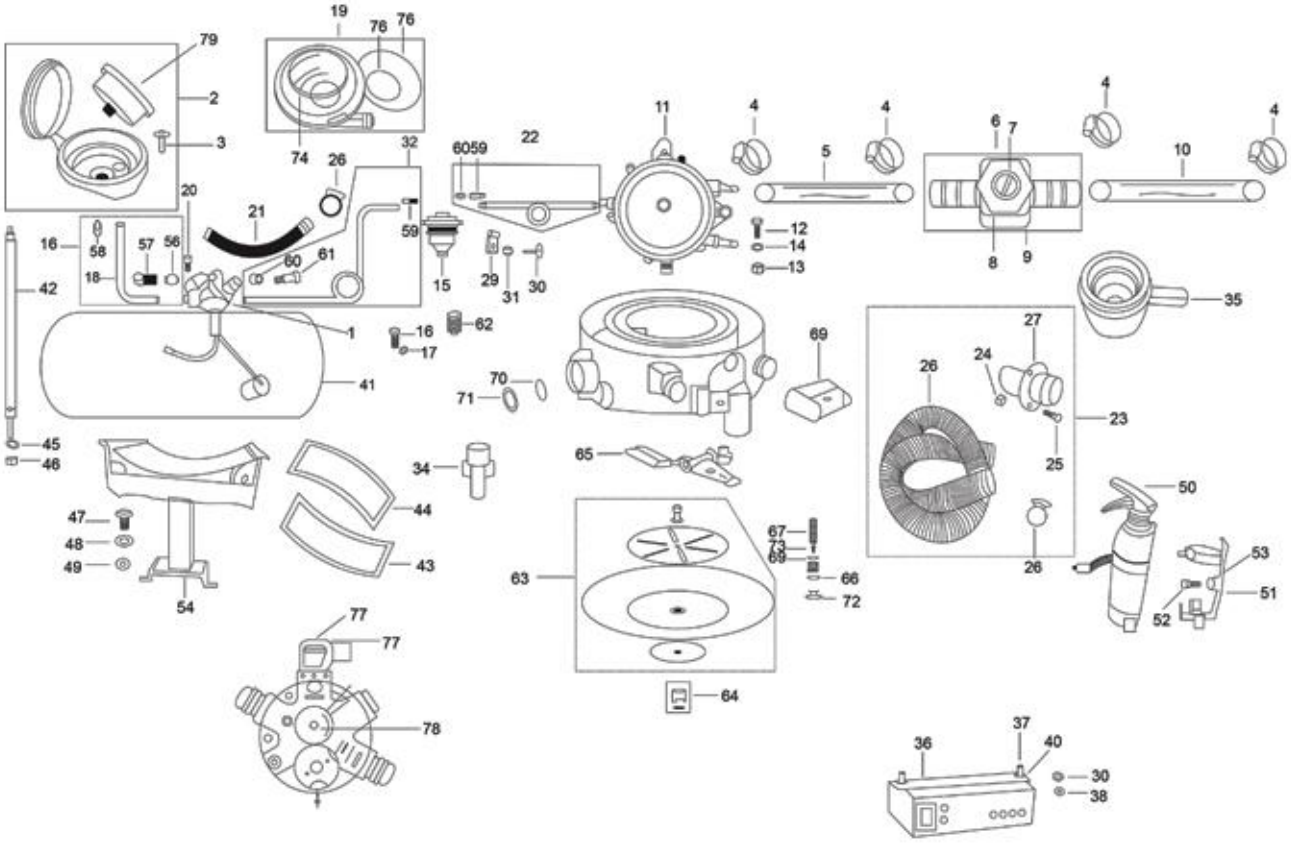
19
76
76
79
2
3
74
26
32
6059
22
11
4
4
5
6
7
4
10
4
20
21
59
12
14
13
16
58
57
56
60
61
18
42
15
29
31
30
8
9
35
1
16
17
62
69
27
24
26
41
70
71
23
25
45
46
65
34
50
44
47
48
49
43
67
73
69
66
72
63
26
53
51
52
54
77
77
64
78
36
37
40
30
38

109

Print Date: 27-Mar-2022

PLATE-37
LPG-KIT

Fig. No.	Part No.	Description	Qty	Remarks
36	932268	ECU	1	
37	644975	SELF TAPPING SCREW FOR ECU - LPG	2	
38	661985	PLAIN WASHER FOR ECU	2	
39	661986	SPRING WASHER FOR ECU	2	
40	661994	NUT FOR ECU (LPG)	2	
41	632186	LPG CYLINDER	1	
41	B073024	LPG CYLINDER	1	For Zero Degree
42	632183	RUBBER STRAP	2	
43	632185	LOWER STRAPS ASSY.	2	
44	632184	RUBBER STRAP UPPER	2	
45	-	NUT M 10	2	
46	16410	SPRING WASHER	2	
47	-	HEX HEAD SCREW M8 X 18	12	
48	016408	SPRING WASHER	12	
49	3058	PLAIN WASHER 15X8.4X1.5	12	
50	643655R	FIRE EXTINGUISHER	1	
51	643598	EXTINGUISHER BKT ASSLY COMPLETE	1	
52	-	HEX HEAD SCREW M8 X 18 (811082029)	2	
53	016408	SPRING WASHER	2	
54	643927	ASSY CENTRAL BRACKET	2	
55	643877	WIRING HARNESS LPG. (NI)	1	
56	925726	FERRULE	2	
57	925734	COUPLING SCREW	1	
58	925732	UNION NUT	1	
59	925733	UNION NUT	1	
60	661905	FERRULE	2	
61	661913	COUPLING SREW	1	
62	925737	FILTER ELEMENT(K-0301-12-050)	1	
63	925741	DIAPHRAGM SUB. ASSY. (1 ST STAGE)	2	
64	925731	FILTER SUB. ASSY.	1	
65	925768	PAD	1	
66	925779	IDLINGSCREW(R-8104-220)	1	
67	925720	SPRING	1	
68	925781	O RING	1	
69	925785	SOLENOID VALVE (S-0102)	1	

110

Print Date: 27-Mar-2022

PLATE-37
LPG-KIT

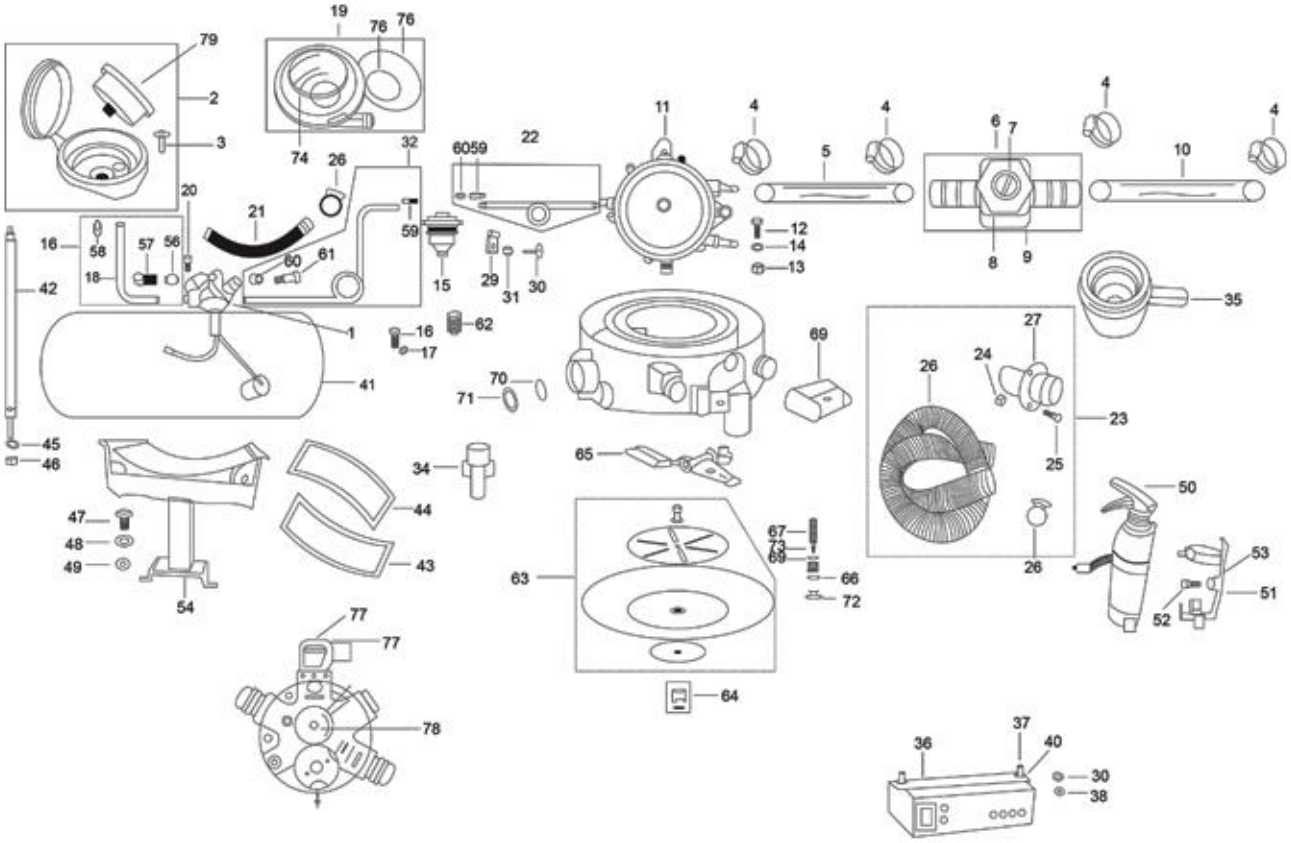
19
76
76
79
2
3
74
26
32
6059
22
11
4
4
5
6
7
4
10
4
20
21
59
12
14
13
16
58
57
56
60
61
18
42
15
29
31
30
8
9
35
1
16
17
62
69
27
26
24
41
70
71
23
25
45
46
65
34
50
44
47
48
49
43
67
73
69
66
72
63
26
53
51
52
54
77
77
64
78
36
37
40
30
38

111

Print Date: 27-Mar-2022

PLATE-37
LPG-KIT

Fig. No.	Part No.	Description	Qty	Remarks
70	925770	O-RING(R-8101-500)	1	
71	-	O RING	1	
72	-	LOCK NUT	1	
73	925772	SPRING GUIDE(R-81015-620)	1	
74	925738	UPPER CASE	4	
75	925728	O RING (SEAL BOX)	1	
76	925725	O RING (SEAL BOX)	1	
77	925745	SOLENOID VALVE (MFV)	1	
78	925742	CONTENT GAUGE(V-5406-450)	1	
79	925729	FILLER CAP	1	

112

Print Date: 27-Mar-2022

PLATE-11.1

AIR FILTER ASSLY. COMPLETE

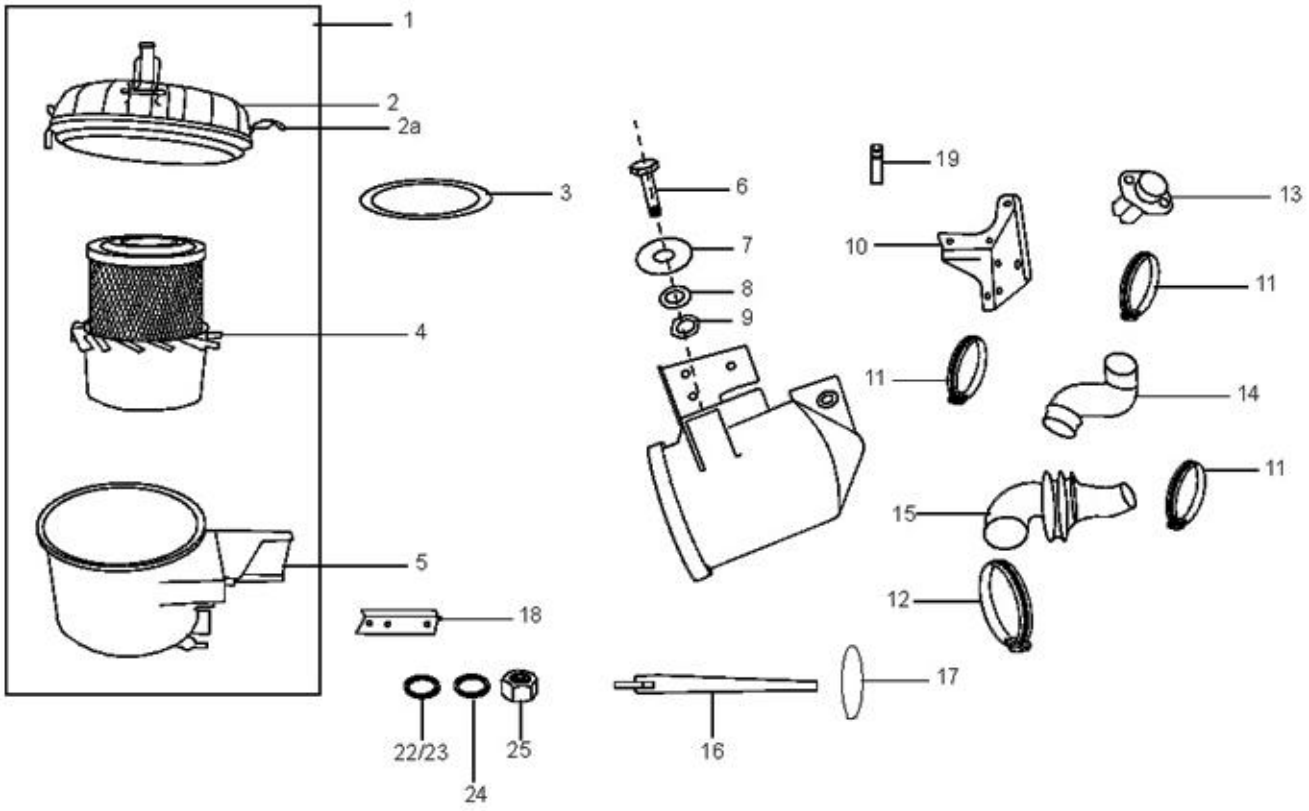
1
2
2a
3
4
5
6
7
8
9
10
11
11
11
12
13
14
15
16
17
18
19
22/23
24
25

113

Print Date: 27-Mar-2022

PLATE-11.1

AIR FILTER ASSLY. COMPLETE

Fig. No.	Part No.	Description	Qty	Remarks
1	B077441	AIR FILTER MOUNTING ASSLY. COMPLETE	1	BSIV-CNG
1	B077448	AIR FILTER MOUNTING ASSLY. COMPLETE	1	BSIV-LPG
1	E40018625	AIR FILTER ASSYPLASTIC MODIFIED SEALING	1	BSIV
2	920088	CLAMP	1	C
2A	632427	O RING	1	C
3	632428	FILTER ELEMENT ASSLY (ENGINETECH AIR FI	1	C
4	920102	ELEMENT FOR AIR CLEANER	1	C
5	031090	HEXAGONAL SCREW	1	C
6	604973	PLAIN WASHER M6	3	C
7	016406	SPRING WASHER	3	C
8	20106	HEX NUT M6	3	C
9	20106	HEX NUT M6	3	C
10	604750	BRACKET FOR ENGINETECH FILTER	1	C
11	604756	HOSE CLIP	3	C
12	611621	PLASTIC FLANGE ENGINETECH (N.I.)	1	C
13	1A007620	RESTRACTOR FOR AIR FILTER-SNORKEL PTL	1	BSIV
14	662491	HOSE AIR FILTER TO MIXER	1	
15	662544	HOSE AIR INTAKE TO AIR FILTER	1	
16	B009290	STRAP ASSY.	1	C
16	632413	RUBBER PACKING (N.I.)	1	C
17	632412	BKT. STRAP HOLDING	1	C
18	632426	DUST VALVE (ENGINETECH)	1	C
19	230560	SPACER	1	C
20	569041	KNOB ASSLY (ENGINETECH AIR FILTER)	3	C
21	3056	PLAIN WASHER M6 OD12	1	C
22	013880	PLAIN WASHER	2	C
23	016406	SPRING WASHER	2	C
24	20106	HEX NUT M6	4	C
25	20106	HEX NUT M6	4	C
26	79375	RUBBER BUMPER	3	C

114

Print Date: 27-Mar-2022

PLATE-24.1
ALUMINIUM CLUTCH ASSEMBLY

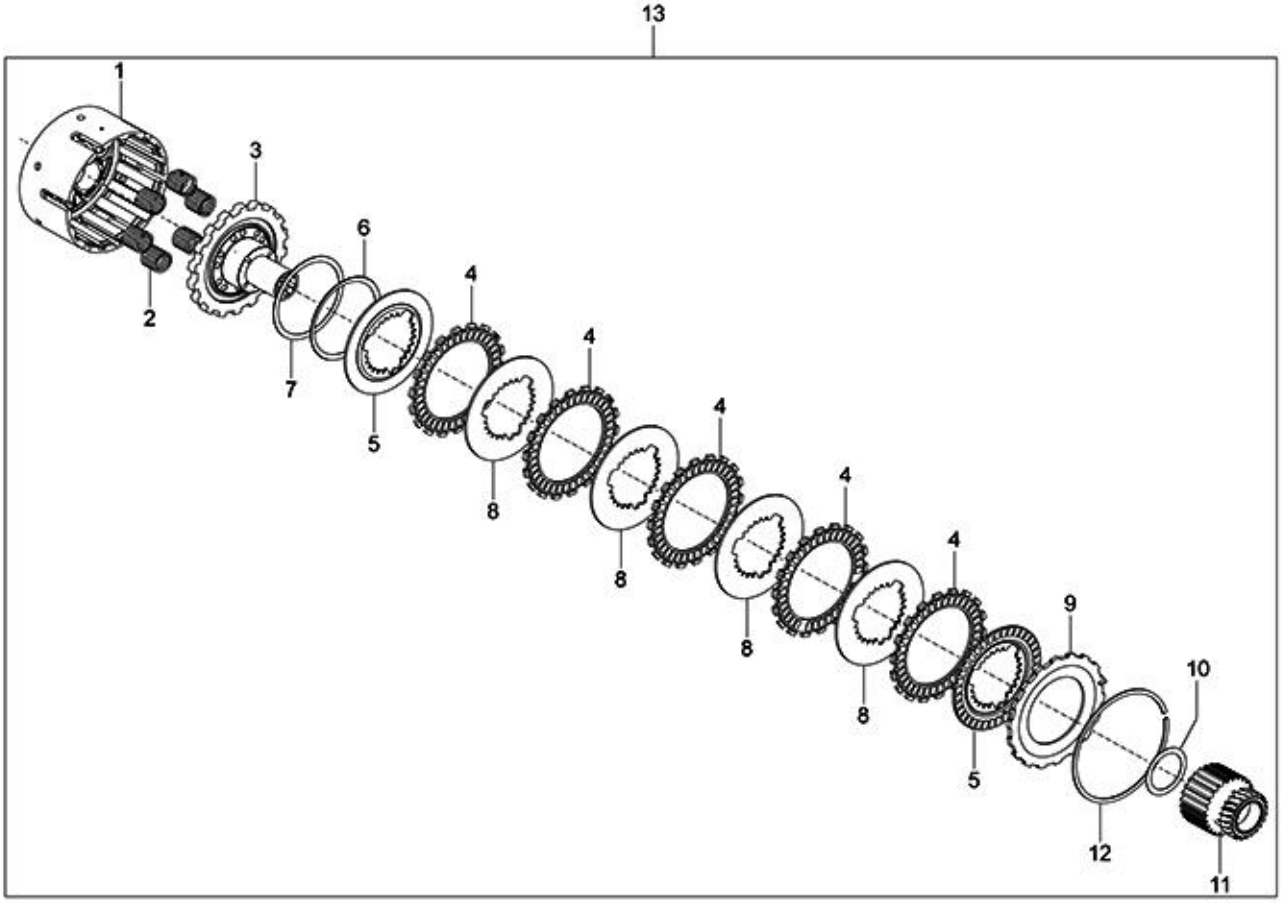
13
1
3
6
4
2
7
5
4
8
4
8
4
8
4
8
4
5
9
10
12
11

115

Print Date: 27-Mar-2022

PLATE-24.1

ALUMINIUM CLUTCH ASSEMBLY

Fig. No.	Part No.	Description	Qty	Remarks
1	1A017153	CLUTCH HOUSING	1	
2	1A017147	CLUTCH SPRING	6	
3	1A017154	PLATE HUB	1	
4	1A017155	DRIVER PLATE	5	
5	1A017156	DRIVEN PLATE	2	
6	1A017157	DAMPER SPRING	1	
7	1A017158	DAMPER SPRING RETAINER	1	
8	1A017159	DRIVEN PLATE	4	
9	1A017160	CLUTCH LOCK PLATE	1	
10	1A017161	SHIM WASHER	1	
11	1A017162	ENGINE GEAR WITH BUSH	1	
12	1A017163	RETAINING RING	1	
13	1A015065	COMPLETE CLUTCH ASSY	1	
14	KIT95117R	KIT ALUMINIUM CLUTCH PLATES DSL BS4/BS6	1	Complete Clutch Plate Set (NI)

116

Print Date: 27-Mar-2022

PLATE-24.2

CLUTCH & COVER ASSEMBLY (FOR ALUMINIUM CLUTCH)

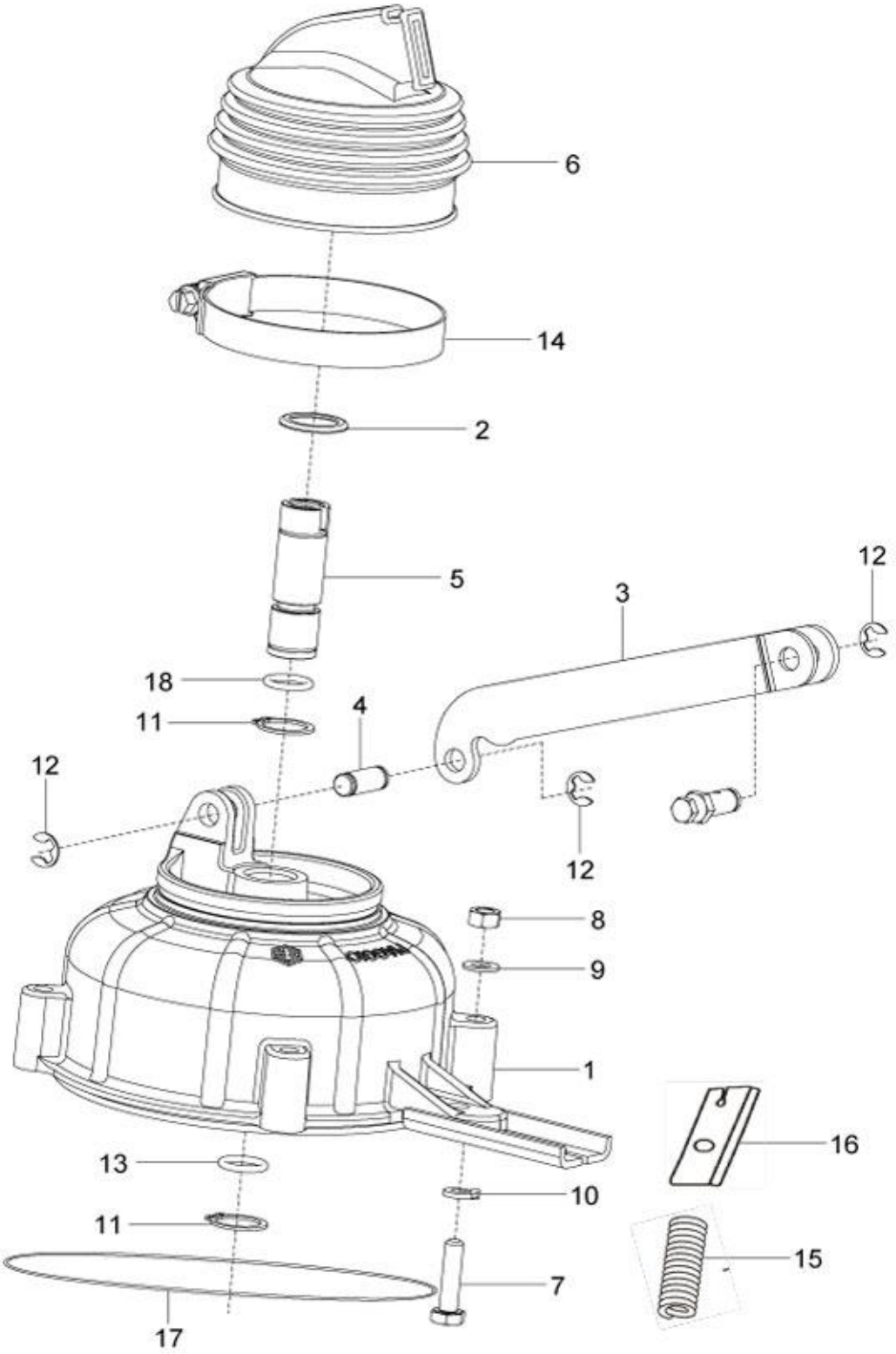
6
14
2
5
12
3
18
11
4
12
12
8
9
1
16
13
10
11
15
7
17

117

Print Date: 27-Mar-2022

PLATE-24.2

CLUTCH & COVER ASSEMBLY (FOR ALUMINIUM CLUTCH)

Fig. No.	Part No.	Description	Qty	Remarks
1	1F000830	CLUTCH COVER	1	
2	120164019	RETAINING PLATE	1	
3	127460010	LINK ASSLY - CLUTCH (IMPROVED)	1	
4	127013013	PIN CLUTCH	1	
5	1A014753	PLUNGER SHAFT	1	
6	127012019	BELLOW CLUTCH ACTUATING	1	
7	31092	HEX. HD SCREW M6X25	1	
8	20106	HEX NUT M6	1	
9	3056	PLAIN WASHER M6 OD12	1	
10	016406	SPRING WASHER	1	
11	842001600	CIRCLIP DIA.16(EXT)	1	
12	843000809	CIRCLIP DIA.8(EXT) TYPE C	2	
13	B019220	O- RING (PLUNGER SHAFT)	1	
14	120170018	HOSE CLIP - CLUTCH COVER BELOW	1	
15	127185012	SPRING - CLUTCH COVER	1	
16	127471019	BRACKET CLUTCH CABLE GUIDE	1	
17	825123207	O - RING CLUTCH COVER	1	
18	B019220	O- RING (PLUNGER SHAFT)	1	

118

Print Date: 27-Mar-2022

PARTS INDEX

ape 501 CNG LPG Pass BS-III

119

Print Date: 27-Mar-2022

PART NO	BLOCK	PART NO	BLOCK	PART NO	BLOCK
-	PLATE-19	016408	PLATE-36	112898	PLATE-18
003054	PLATE-31	016408	PLATE-37	113278	PLATE-18
003054	PLATE-32	016408	PLATE-37	114121	PLATE-30
003054	PLATE-18	016408	PLATE-15	116088	PLATE-34
003054	PLATE-22	016408	PLATE-18	116088	PLATE-35
003054	PLATE-23	016408	PLATE-18	116103	PLATE-23
003054	PLATE-24	016408	PLATE-20	117401	PLATE-18
003054	PLATE-30	016408	PLATE-20	117402	PLATE-18
003054	PLATE-30	016408	PLATE-20	117402	PLATE-18
003054	PLATE-31	016408	PLATE-21	117404	PLATE-18
013880	PLATE-32	016408	PLATE-21	118447	PLATE-21
013880	PLATE-11.1	016408	PLATE-24	118806	PLATE-28
013880	PLATE-21	016408	PLATE-29	119181	PLATE-28
013880	PLATE-23	016408	PLATE-29	119278	PLATE-18
013880	PLATE-23	016408	PLATE-29	119278	PLATE-28
016404	PLATE-32	016408	PLATE-31	119278	PLATE-29
016404	PLATE-36	031090	PLATE-32	119735	PLATE-30
016404	PLATE-18	031090	PLATE-11.1	119928	PLATE-28
016404	PLATE-30	105392	PLATE-21	119975	PLATE-30
016406	PLATE-31	107718	PLATE-27	120164019	PLATE-24.2
016406	PLATE-32	107732	PLATE-27	120164019	PLATE-19
016406	PLATE-33	107827	PLATE-26	120170018	PLATE-24.2
016406	PLATE-33	107870	PLATE-26	120170018	PLATE-19
016406	PLATE-11.1	107870	PLATE-27	120203011	PLATE-18
016406	PLATE-11.1	107871	PLATE-27	120204015R	PLATE-16
016406	PLATE-24.2	108215	PLATE-27	120205019	PLATE-16
016406	PLATE-17	108785	PLATE-29	120212012	PLATE-15
016406	PLATE-18	108873	PLATE-27	120238016	PLATE-19
016406	PLATE-18	108874	PLATE-27	120271018	PLATE-15
016406	PLATE-18	109012	PLATE-21	120321019	PLATE-18
016406	PLATE-19	109064	PLATE-27	12136	PLATE-31
016406	PLATE-21	109066	PLATE-27	12136	PLATE-15
016406	PLATE-23	109117	PLATE-27	12138	PLATE-32
016406	PLATE-28	109227	PLATE-28	12138	PLATE-28
016406	PLATE-31	109265	PLATE-27	122032014	PLATE-16
016408	PLATE-31	109404	PLATE-28	122032014	PLATE-17
016408	PLATE-32	109635	PLATE-28	124102019	PLATE-18
016408	PLATE-32	109775	PLATE-28	124112014	PLATE-18
016408	PLATE-32	109892	PLATE-26	124113018	PLATE-18
016408	PLATE-32	111353	PLATE-18	124121015	PLATE-18
016408	PLATE-32	111356	PLATE-18	124141015R	PLATE-18
016408	PLATE-32	111498	PLATE-18	125012015	PLATE-18
016408	PLATE-36	112867R	PLATE-18	125181	PLATE-28

120

Print Date: 27-Mar-2022

PART NO	BLOCK	PART NO	BLOCK	PART NO	BLOCK
125289	PLATE-27	127471019	PLATE-19	142424	PLATE-24
12536	PLATE-31	127501010	PLATE-18	142425	PLATE-24
12536	PLATE-34	127530011	PLATE-19	14628	PLATE-32
12536	PLATE-35	127555016	PLATE-18	14628	PLATE-32
12540	PLATE-24	127571015R	PLATE-18	14628	PLATE-24
12540	PLATE-24	12761	PLATE-29	150041R	PLATE-30
125411	PLATE-29	127640012	PLATE-17	150579	PLATE-27
12546	PLATE-31	127641016	PLATE-17	150915R	PLATE-31
125998	PLATE-21	127692015	PLATE-19	151924	PLATE-25
126003011	PLATE-17	127693019	PLATE-19	152580	PLATE-26
126004015	PLATE-17	127754019	PLATE-19	152580	PLATE-27
126021013	PLATE-17	127757011	PLATE-19	15335	PLATE-15
126022017	PLATE-17	127758015	PLATE-19	15335	PLATE-18
126052012	PLATE-17	12790	PLATE-26	15335	PLATE-20
126053016	PLATE-17	127911019	PLATE-15	15478	PLATE-20
126054010	PLATE-17	127912013	PLATE-15	15478	PLATE-28
126060019	PLATE-17	127927R	PLATE-27	15594	PLATE-26
126902	PLATE-28	128009	PLATE-21	15640	PLATE-31
127012019	PLATE-24.2	128010	PLATE-21	15641	PLATE-30
127012019	PLATE-19	128081017	PLATE-17	157103	PLATE-26
127013013	PLATE-24.2	128306015	PLATE-18	157103	PLATE-27
127013013	PLATE-19	128307019	PLATE-18	15727	PLATE-31
127016015	PLATE-18	128307019	PLATE-19	15727	PLATE-23
127102010	PLATE-15	128633	PLATE-26	15727	PLATE-30
127103014	PLATE-18	129011019	PLATE-19	157716	PLATE-23
127111011	PLATE-18	129012013	PLATE-19	15900	PLATE-32
127121016	PLATE-18	132129	PLATE-18	15900	PLATE-30
127141016	PLATE-18	132134	PLATE-18	15900	PLATE-30
127171310	PLATE-15	132244	PLATE-18	15900	PLATE-30
127179	PLATE-30	136426	PLATE-26	15911	PLATE-32
127185012	PLATE-24.2	136434	PLATE-27	15911	PLATE-32
127185012	PLATE-19	136451R	PLATE-26	15911	PLATE-20
127203010R	PLATE-16	136916	PLATE-20	15911	PLATE-22
127302517R	PLATE-16	137026	PLATE-26	15911	PLATE-24
127303016R	PLATE-16	137026	PLATE-26	15911	PLATE-24
127306513R	PLATE-16	137235	PLATE-27	15911	PLATE-31
127309515R	PLATE-16	13812	PLATE-29	15996	PLATE-31
127404016R	PLATE-18	138237	PLATE-29	15996	PLATE-32
127451019R	PLATE-16	13861	PLATE-21	15996	PLATE-36
127451	PLATE-28	13861	PLATE-24	16319	PLATE-28
127460010	PLATE-24.2	14034	PLATE-24	16405	PLATE-31
127460010	PLATE-19	140728	PLATE-29	16405	PLATE-20
127471019	PLATE-24.2	141925	PLATE-28	16405	PLATE-21

121

Print Date: 27-Mar-2022

PART NO	BLOCK	PART NO	BLOCK	PART NO	BLOCK
16405	PLATE-21	178824	PLATE-35	1A017158	PLATE-24.1
16405	PLATE-21	179056	PLATE-34	1A017159	PLATE-24.1
16405	PLATE-24	179056	PLATE-35	1A017160	PLATE-24.1
16405	PLATE-24	179057	PLATE-35	1A017161	PLATE-24.1
16410	PLATE-36	180431	PLATE-27	1A017162	PLATE-24.1
16410	PLATE-37	181746	PLATE-31	1A017163	PLATE-24.1
16410	PLATE-18	181747	PLATE-31	1F000754	PLATE-19
16410	PLATE-20	18630	PLATE-23	1F000755	PLATE-19
16410	PLATE-20	190255	PLATE-21	1F000830	PLATE-24.2
16410	PLATE-26	190393	PLATE-24	1F000832	PLATE-19
16410	PLATE-26	190462	PLATE-24	20104	PLATE-32
16410	PLATE-27	190462	PLATE-24	20104	PLATE-36
16410	PLATE-28	190465	PLATE-24	20104	PLATE-18
164906	PLATE-28	190479	PLATE-24	20104	PLATE-24
165121014	PLATE-18	192020017	PLATE-25	20104	PLATE-30
165121014	PLATE-18	196302	PLATE-26	20105	PLATE-31
16603	PLATE-21	197071	PLATE-28	20105	PLATE-31
16603	PLATE-24	1A000236	PLATE-18	20105	PLATE-18
16620	PLATE-28	1A000612	PLATE-18	20105	PLATE-20
16626	PLATE-28	1A000817	PLATE-18	20105	PLATE-21
16670	PLATE-32	1A000826	PLATE-18	20105	PLATE-24
16670	PLATE-32	1A001455	PLATE-19	20105	PLATE-28
16670	PLATE-36	1A001457	PLATE-19	20105	PLATE-29
16670	PLATE-22	1A004807	PLATE-18	20105	PLATE-31
17702	PLATE-18	1A004807	PLATE-18	20105	PLATE-31
178610	PLATE-20	1A005176	PLATE-18	20106	PLATE-31
178804	PLATE-34	1A007620	PLATE-11.1	20106	PLATE-32
178804	PLATE-35	1A009926	PLATE-18	20106	PLATE-32
178805	PLATE-34	1A010094	PLATE-15	20106	PLATE-11.1
178805	PLATE-35	1A010139	PLATE-18	20106	PLATE-11.1
178806	PLATE-34	1A011547R	PLATE-19	20106	PLATE-11.1
178806	PLATE-35	1A011778	PLATE-18	20106	PLATE-11.1
178807	PLATE-34	1A011810	PLATE-18	20106	PLATE-24.2
178807	PLATE-35	1A014592	PLATE-18	20106	PLATE-19
178808	PLATE-34	1A014753	PLATE-24.2	20106	PLATE-19
178808	PLATE-35	1A015065	PLATE-24.1	20106	PLATE-23
178818	PLATE-35	1A016604	PLATE-15	20106	PLATE-23
178819	PLATE-35	1A017147	PLATE-24.1	20106	PLATE-28
178820	PLATE-35	1A017153	PLATE-24.1	20106	PLATE-31
178821	PLATE-35	1A017154	PLATE-24.1	20108	PLATE-31
178823	PLATE-34	1A017155	PLATE-24.1	20108	PLATE-32
178823	PLATE-35	1A017156	PLATE-24.1	20108	PLATE-32
178824	PLATE-34	1A017157	PLATE-24.1	20108	PLATE-32

122

Print Date: 27-Mar-2022

PART NO	BLOCK	PART NO	BLOCK	PART NO	BLOCK
20108	PLATE-32	272178	PLATE-20	3058	PLATE-37
20108	PLATE-18	286328	PLATE-20	3058	PLATE-20
20108	PLATE-18	286328	PLATE-20	3058	PLATE-21
20108	PLATE-20	286328	PLATE-20	3058	PLATE-23
20108	PLATE-20	286328	PLATE-26	3058	PLATE-29
20108	PLATE-20	286406	PLATE-19	3058	PLATE-31
20108	PLATE-21	288730	PLATE-18	3068	PLATE-26
20108	PLATE-23	30072	PLATE-21	31054	PLATE-21
20108	PLATE-24	30072	PLATE-24	31056	PLATE-31
20108	PLATE-24	30072	PLATE-24	31057	PLATE-31
20108	PLATE-29	30074	PLATE-32	31058	PLATE-31
20108	PLATE-29	30074	PLATE-32	31058	PLATE-24
20110	PLATE-20	30077	PLATE-28	31088	PLATE-32
20110	PLATE-20	30103	PLATE-28	31088	PLATE-33
20110	PLATE-26	30209R	PLATE-16	31088	PLATE-33
20110	PLATE-27	30209R	PLATE-27	31088	PLATE-18
20110	PLATE-28	3055	PLATE-31	31088	PLATE-18
20359	PLATE-26	3055	PLATE-31	31088	PLATE-21
21216	PLATE-27	3055	PLATE-20	31088	PLATE-23
219528	PLATE-30	3055	PLATE-20	31088	PLATE-30
220575	PLATE-18	3055	PLATE-24	31088	PLATE-31
226596	PLATE-26	3055	PLATE-24	31089	PLATE-32
226661	PLATE-26	3055	PLATE-30	31089	PLATE-23
226662	PLATE-26	3055	PLATE-31	31089	PLATE-28
229524	PLATE-29	3056	PLATE-31	31092	PLATE-32
230560	PLATE-11.1	3056	PLATE-32	31092	PLATE-24.2
231370	PLATE-18	3056	PLATE-32	31092	PLATE-18
231370	PLATE-20	3056	PLATE-33	31092	PLATE-19
231370	PLATE-20	3056	PLATE-33	31092	PLATE-23
231370	PLATE-26	3056	PLATE-11.1	31116	PLATE-32
231370	PLATE-26	3056	PLATE-24.2	31116	PLATE-32
231370	PLATE-26	3056	PLATE-17	31116	PLATE-33
237246	PLATE-26	3056	PLATE-18	31116	PLATE-36
2383	PLATE-20	3056	PLATE-18	31116	PLATE-20
243303R	PLATE-26	3056	PLATE-19	31116	PLATE-31
2438	PLATE-28	3056	PLATE-30	31118	PLATE-32
245038	PLATE-34	3056	PLATE-31	31118	PLATE-20
245038	PLATE-35	3057	PLATE-32	31118	PLATE-29
265091	PLATE-20	3058	PLATE-32	31119	PLATE-32
267065	PLATE-20	3058	PLATE-32	31119	PLATE-20
267065	PLATE-26	3058	PLATE-32	31119	PLATE-21
267068	PLATE-26	3058	PLATE-33	31122	PLATE-29
272178	PLATE-20	3058	PLATE-36	31159	PLATE-20

123

Print Date: 27-Mar-2022

PART NO	BLOCK	PART NO	BLOCK	PART NO	BLOCK
31159	PLATE-26	568131	PLATE-23	587829	PLATE-27
414948	PLATE-24	568135	PLATE-32	587849	PLATE-21
48197	PLATE-27	568135	PLATE-24	587902	PLATE-28
520221019R	PLATE-15	568140	PLATE-20	587904	PLATE-28
523011013R	PLATE-16	568154	PLATE-21	587907	PLATE-32
523012017	PLATE-16	568161	PLATE-29	587919	PLATE-28
523014015	PLATE-16	568260	PLATE-20	587928	PLATE-29
523021018	PLATE-16	568275	PLATE-32	587948	PLATE-32
566545	PLATE-27	568289	PLATE-26	587961	PLATE-24
567454	PLATE-25	568325	PLATE-32	587962	PLATE-32
567455	PLATE-25	568671	PLATE-22	587962	PLATE-24
567456	PLATE-25	568682	PLATE-21	587963	PLATE-21
567457	PLATE-25	568689	PLATE-20	587971	PLATE-25
567458	PLATE-25	568702	PLATE-23	587974R	PLATE-22
567459	PLATE-25	568703	PLATE-23	587974R	PLATE-30
567461	PLATE-29	568714	PLATE-31	5969	PLATE-29
567473	PLATE-27	568737	PLATE-29	6018	PLATE-25
567484	PLATE-33	568741	PLATE-24	602120	PLATE-35
567498R	PLATE-31	568750	PLATE-31	602120	PLATE-26
567534	PLATE-32	569041	PLATE-11.1	602123	PLATE-35
567535	PLATE-32	569150	PLATE-27	602123	PLATE-26
567562	PLATE-21	569165	PLATE-31	602497	PLATE-34
567593	PLATE-30	569166	PLATE-31	602497	PLATE-35
567690	PLATE-29	569197	PLATE-31	604502	PLATE-29
567700	PLATE-31	569244	PLATE-20	604506	PLATE-31
567706	PLATE-31	569246R	PLATE-27	604506	PLATE-31
567719	PLATE-29	569255	PLATE-27	604508	PLATE-28
567732	PLATE-32	569377	PLATE-20	604535	PLATE-26
567741	PLATE-15	587616	PLATE-34	604557	PLATE-31
567741	PLATE-19	587617	PLATE-26	604560	PLATE-17
567746G1	PLATE-29	587628	PLATE-28	604560	PLATE-18
567878R	PLATE-21	587633	PLATE-29	604603	PLATE-24
567893	PLATE-22	587650R	PLATE-31	604606	PLATE-20
567898	PLATE-29	587670R	PLATE-22	604606	PLATE-21
567899	PLATE-29	587670R	PLATE-30	604691	PLATE-23
567920	PLATE-29	587685	PLATE-18	604707	PLATE-25
567990	PLATE-27	587687	PLATE-18	604715	PLATE-28
567991	PLATE-27	587702	PLATE-29	604717	PLATE-29
567992	PLATE-27	587763	PLATE-21	604750	PLATE-11.1
567993	PLATE-27	587803	PLATE-28	604756	PLATE-11.1
568095	PLATE-27	587806	PLATE-28	604758	PLATE-27
568107	PLATE-32	587812	PLATE-28	604758	PLATE-27
568131	PLATE-21	587822	PLATE-29	604759	PLATE-27

124

Print Date: 27-Mar-2022

PART NO	BLOCK	PART NO	BLOCK	PART NO	BLOCK
604760	PLATE-29	632428	PLATE-11.1	643877	PLATE-37
604779	PLATE-28	632477R	PLATE-30	643878	PLATE-37
604826	PLATE-21	632478R	PLATE-30	643883	PLATE-37
604856	PLATE-36	632508	PLATE-23	643884	PLATE-37
604877	PLATE-29	632995	PLATE-31	643906	PLATE-36
604880	PLATE-29	632995	PLATE-31	643908	PLATE-36
604948	PLATE-20	63440	PLATE-34	643912	PLATE-37
604954	PLATE-23	63440	PLATE-35	643913	PLATE-37
604973	PLATE-11.1	6411	PLATE-29	643927	PLATE-37
604984	PLATE-22	6414	PLATE-29	643998	PLATE-36
605389	PLATE-22	643502	PLATE-30	644812	PLATE-20
60565	PLATE-28	643598	PLATE-36	644812	PLATE-29
6066	PLATE-26	643598	PLATE-37	644813	PLATE-20
6066	PLATE-27	643616	PLATE-31	644813	PLATE-29
6078	PLATE-31	643655R	PLATE-36	644814R	PLATE-20
6078	PLATE-31	643655R	PLATE-37	644814R	PLATE-27
6078	PLATE-20	643661	PLATE-32	644838R	PLATE-33
6078	PLATE-20	643670	PLATE-32	644839R	PLATE-20
6078	PLATE-24	643684R	PLATE-24	644973R	PLATE-25
611621	PLATE-11.1	643685R	PLATE-24	644975	PLATE-37
6125	PLATE-28	643691	PLATE-22	644979	PLATE-24
616541	PLATE-34	643692	PLATE-20	645041	PLATE-31
616541	PLATE-27	643704R	PLATE-31	6450	PLATE-18
616649	PLATE-23	643705R	PLATE-31	645124	PLATE-28
616695	PLATE-28	643708	PLATE-36	645141	PLATE-24
6173	PLATE-29	643711R	PLATE-20	645153R	PLATE-30
6173	PLATE-29	643741	PLATE-26	652124	PLATE-19
632137	PLATE-28	643752	PLATE-32	652520	PLATE-26
632148	PLATE-35	643772R	PLATE-27	652520	PLATE-27
632148	PLATE-35	643839	PLATE-36	652521	PLATE-27
632158	PLATE-28	643843	PLATE-36	659842	PLATE-15
632183	PLATE-37	643844	PLATE-36	659857	PLATE-36
632184	PLATE-37	643846	PLATE-36	659870	PLATE-36
632185	PLATE-37	643847	PLATE-36	660109	PLATE-31
632186	PLATE-37	643848	PLATE-36	660141	PLATE-28
632247	PLATE-20	643859	PLATE-36	660153	PLATE-27
632285	PLATE-31	643864	PLATE-36	660168	PLATE-22
632292	PLATE-31	643864	PLATE-37	660179	PLATE-36
632299	PLATE-20	643869	PLATE-36	660207ED	PLATE-32
632412	PLATE-11.1	643869	PLATE-37	660351	PLATE-28
632413	PLATE-11.1	643873	PLATE-37	660498SP	PLATE-27
632426	PLATE-11.1	643873	PLATE-37	660499SP	PLATE-27
632427	PLATE-11.1	643877	PLATE-36	660826R	PLATE-22

125

Print Date: 27-Mar-2022

PART NO	BLOCK	PART NO	BLOCK	PART NO	BLOCK
660826R	PLATE-30	662544	PLATE-11.1	822031942	PLATE-18
660927	PLATE-20	662567	PLATE-28	822031942	PLATE-19
660931	PLATE-26	662568	PLATE-28	822051647	PLATE-18
660931	PLATE-27	6650	PLATE-26	825080209	PLATE-17
661231	PLATE-27	6733	PLATE-27	825080209	PLATE-18
661231	PLATE-31	6965	PLATE-31	825123207	PLATE-24.2
661262	PLATE-32	6965	PLATE-31	825123207	PLATE-19
661266	PLATE-26	6C000016	PLATE-18	825420215	PLATE-15
661267	PLATE-26	6C000041	PLATE-18	8265	PLATE-23
661282	PLATE-26	6C000060	PLATE-26	841005207	PLATE-16
661399	PLATE-36	6C000060	PLATE-26	841005207	PLATE-18
661454R	PLATE-33	6C000190	PLATE-27	841005506	PLATE-18
661493	PLATE-32	6C000191	PLATE-27	842001507	PLATE-16
661627	PLATE-21	6C000312R	PLATE-18	842001600	PLATE-24.2
661627	PLATE-21	6C000362	PLATE-26	842001600	PLATE-19
661634	PLATE-24	6C000363	PLATE-26	842002501	PLATE-16
661635	PLATE-24	6C000382	PLATE-20	842002501	PLATE-18
661735	PLATE-37	6C000662	PLATE-26	842003000	PLATE-18
661758	PLATE-36	6D000407	PLATE-36	842004808	PLATE-16
661822	PLATE-37	6D000409	PLATE-33	843000500	PLATE-18
661825	PLATE-36	6D000409	PLATE-36	843000809	PLATE-24.2
661905	PLATE-37	7066R	PLATE-18	843000809	PLATE-19
661908	PLATE-36	71633	PLATE-31	843000809	PLATE-29
661908	PLATE-37	71633	PLATE-31	8432	PLATE-32
661909	PLATE-36	71633	PLATE-30	8432	PLATE-32
661909	PLATE-37	74414	PLATE-26	8432	PLATE-24
661910	PLATE-36	74521	PLATE-27	8432	PLATE-30
661910	PLATE-37	75708	PLATE-27	8451	PLATE-31
661911	PLATE-36	7608	PLATE-28	87067	PLATE-27
661911	PLATE-37	76227	PLATE-24	8771	PLATE-27
661912	PLATE-36	77055	PLATE-31	880255211R	PLATE-16
661912	PLATE-37	78307	PLATE-23	880305509R	PLATE-18
661913	PLATE-37	79375	PLATE-11.1	884222808	PLATE-16
661916	PLATE-36	807000647	PLATE-15	9000	PLATE-32
661916	PLATE-37	808000826	PLATE-15	920075	PLATE-37
661917	PLATE-37	808000826	PLATE-18	920083	PLATE-31
661925	PLATE-30	808000826	PLATE-18	920084	PLATE-31
661925	PLATE-31	8080	PLATE-22	920088	PLATE-11.1
661985	PLATE-37	8080	PLATE-30	920102	PLATE-11.1
661986	PLATE-37	811051525	PLATE-18	920102	PLATE-11
661994	PLATE-37	811081025	PLATE-15	925212	PLATE-31
662476	PLATE-20	812061656	PLATE-15	925501	PLATE-34
662491	PLATE-11.1	815064025	PLATE-15	925501	PLATE-35

126

Print Date: 27-Mar-2022

PART NO	BLOCK	PART NO	BLOCK	PART NO	BLOCK
925508	PLATE-29	925751	PLATE-36	B001505	PLATE-28
925509	PLATE-29	925752	PLATE-36	B001540	PLATE-36
925521	PLATE-34	925754	PLATE-36	B001556R	PLATE-22
925567	PLATE-31	925756	PLATE-36	B001556R	PLATE-30
925571	PLATE-31	925757	PLATE-36	B001844	PLATE-15
925572	PLATE-31	925759	PLATE-36	B001954R	PLATE-25
925577	PLATE-30	925759	PLATE-36	B002101	PLATE-30
925578	PLATE-30	925760	PLATE-36	B002101	PLATE-30
925579	PLATE-30	925761	PLATE-36	B002199	PLATE-24
925580	PLATE-30	925761	PLATE-37	B002320	PLATE-15
925581	PLATE-31	925768	PLATE-37	B002322	PLATE-15
925581	PLATE-30	925769	PLATE-36	B002615	PLATE-28
925584	PLATE-31	925770	PLATE-36	B002823	PLATE-28
925585	PLATE-31	925770	PLATE-37	B002875	PLATE-21
925587	PLATE-30	925772	PLATE-36	B003155	PLATE-18
925588	PLATE-30	925772	PLATE-37	B003228	PLATE-27
925589	PLATE-31	925774	PLATE-36	B003658	PLATE-23
925590	PLATE-30	925776	PLATE-36	B003784	PLATE-34
925597	PLATE-30	925778	PLATE-36	B003784	PLATE-35
925598	PLATE-30	925779	PLATE-36	B003924	PLATE-16
925604	PLATE-31	925779	PLATE-37	B006806	PLATE-31
925605	PLATE-31	925780	PLATE-36	B008167	PLATE-23
925720	PLATE-37	925781	PLATE-36	B008400	PLATE-32
925725	PLATE-37	925781	PLATE-37	B009017	PLATE-36
925726	PLATE-37	925783	PLATE-36	B009071BY	PLATE-21
925727	PLATE-36	925785	PLATE-36	B009071EG	PLATE-21
925728	PLATE-37	925785	PLATE-37	B009071WR	PLATE-21
925729	PLATE-37	925786	PLATE-36	B009122	PLATE-37
925731	PLATE-37	925888	PLATE-21	B009144	PLATE-20
925732	PLATE-37	932242	PLATE-36	B009290	PLATE-36
925733	PLATE-37	932268	PLATE-37	B009290	PLATE-11.1
925734	PLATE-37	940004	PLATE-34	B009290	PLATE-31
925737	PLATE-37	940004	PLATE-34	B009701	PLATE-32
925738	PLATE-37	940005	PLATE-35	B009701	PLATE-32
925740	PLATE-37	940005	PLATE-35	B016611	PLATE-17
925741	PLATE-37	940006	PLATE-35	B018991	PLATE-18
925742	PLATE-37	940006	PLATE-35	B019220	PLATE-24.2
925743	PLATE-37	940120	PLATE-22	B019220	PLATE-24.2
925744	PLATE-37	97756	PLATE-32	B019220	PLATE-19
925745	PLATE-37	97756	PLATE-28	B023726R	PLATE-30
925746	PLATE-37	B001386	PLATE-21	B023727R	PLATE-30
925749	PLATE-36	B001501	PLATE-15	B023727R	PLATE-31
925751	PLATE-36	B001503	PLATE-30	B023890	PLATE-19

127

Print Date: 27-Mar-2022

PART NO	BLOCK	PART NO	BLOCK	PART NO	BLOCK
B024179	PLATE-23	B073320R	PLATE-33	E1756507	PLATE-10
B024179	PLATE-24	B073327BY	PLATE-32	E1756507	PLATE-10
B024373	PLATE-26	B073327EG	PLATE-32	E1756507	PLATE-11
B024379	PLATE-19	B073850R	PLATE-31	E1756507	PLATE-12
B024379	PLATE-28	B074663	PLATE-33	E1756507	PLATE-12
B024501	PLATE-32	B074751BL	PLATE-21	E200467003	PLATE-7
B024614	PLATE-18	B074751EG	PLATE-21	E200467021	PLATE-7
B024614	PLATE-20	B074751GY	PLATE-21	E202177002	PLATE-12
B024645	PLATE-24	B075002	PLATE-18	E202756511	PLATE-8
B024732	PLATE-27	B075269	PLATE-32	E250467014	PLATE-1
B024739	PLATE-30	B075313	PLATE-28	E250755504	PLATE-8
B024774	PLATE-28	B075330	PLATE-33	E250755504	PLATE-10
B024775	PLATE-28	B075444	PLATE-32	E250755507	PLATE-5
B024855	PLATE-24	B075444	PLATE-21	E260120016	PLATE-7
B025600	PLATE-30	B075852	PLATE-29	E260756505	PLATE-10
B025601	PLATE-30	B076098ED	PLATE-21	E260973027	PLATE-7
B04100R	PLATE-31	B076304	PLATE-31	E264973008	PLATE-10
B041522	PLATE-22	B076573	PLATE-31	E26756503	PLATE-10
B041524	PLATE-22	B076574	PLATE-31	E26756503	PLATE-13
B041535	PLATE-22	B077441	PLATE-11.1	E270973010	PLATE-1
B041600	PLATE-28	B077441	PLATE-11	E271678054	PLATE-1
B041600	PLATE-28	B077448	PLATE-11.1	E271805703	PLATE-3
B041784	PLATE-36	B077448	PLATE-11	E276176034	PLATE-12
B042179	PLATE-36	B077454	PLATE-11	E276846055	PLATE-1
B042182	PLATE-36	B077455	PLATE-11	E283467036	PLATE-12
B042183	PLATE-36	B077471	PLATE-21	E3124017	PLATE-2
B042317	PLATE-29	B077474	PLATE-32	E3324019	PLATE-11
B042486	PLATE-18	BS4 1A010093	PLATE-15	E40000549	PLATE-3
B042611	PLATE-23	BS4 1A010093	PLATE-18	E40001792	PLATE-10
B042612	PLATE-24	E07502804	PLATE-6	E40001793	PLATE-10
B042657R	PLATE-36	E07502804	PLATE-6	E40001797	PLATE-10
B042726ED	PLATE-32	E07502809	PLATE-12	E40002075	PLATE-2
B042794	PLATE-29	E07502810	PLATE-1	E40002076	PLATE-2
B042798	PLATE-15	E07502811	PLATE-13	E40002077	PLATE-2
B042798	PLATE-15	E07515517	PLATE-13	E40002263	PLATE-1
B042798	PLATE-18	E105324008	PLATE-9	E40002264	PLATE-1
B042799	PLATE-15	E105324008	PLATE-12	E40002265	PLATE-1
B042799	PLATE-15	E11770004	PLATE-12	E40002266	PLATE-1
B073024	PLATE-37	E1177001	PLATE-7	E40002267	PLATE-1
B073083	PLATE-37	E1177001	PLATE-10	E40002773	PLATE-3
B073088	PLATE-23	E1756504	PLATE-10	E40002818	PLATE-4
B073274	PLATE-32	E1756504	PLATE-11	E40005461	PLATE-10
B073275	PLATE-32	E1756504	PLATE-12	E40005469	PLATE-13

128

Print Date: 27-Mar-2022

PART NO	BLOCK	PART NO	BLOCK	PART NO	BLOCK
E40005495	PLATE-13	E40020133	PLATE-13	E50002805	PLATE-1
E40005497	PLATE-10	E40020135	PLATE-10	E50002805	PLATE-1
E40005498	PLATE-13	E40020537	PLATE-2	E50002805	PLATE-1
E40005592	PLATE-10	E40020538	PLATE-2	E50005625006	PLATE-7
E400060112	PLATE-9	E40020539	PLATE-2	E50006060	PLATE-4
E40006214	PLATE-3	E40020540	PLATE-2	E50006060	PLATE-4
E40006215	PLATE-12	E40020615	PLATE-1	E50006101	PLATE-6
E40006428	PLATE-9	E40020638	PLATE-12	E50006169	PLATE-1
E40006482	PLATE-12	E40020639	PLATE-12	E50006328	PLATE-6
E40006847	PLATE-12	E40022211	PLATE-4	E50006342	PLATE-3
E40007754	PLATE-11	E40022212	PLATE-4	E50006404	PLATE-10
E40008724	PLATE-7	E40024008	PLATE-13	E50006495029	PLATE-7
E40008873	PLATE-7	E40024010	PLATE-3	E50007334	PLATE-9
E40008874	PLATE-7	E40026134	PLATE-3	E50007540	PLATE-6
E40009648	PLATE-10	E40026135	PLATE-3	E50008099	PLATE-1
E40009683	PLATE-8	E40027143	PLATE-12	E50008883	PLATE-1
E400106100	PLATE-1	E40027155	PLATE-12	E50009023	PLATE-4
E40010831	PLATE-12	E422973030	PLATE-6	E50009205	PLATE-4
E40011420PA	PLATE-2	E43502707	PLATE-9	E500116008	PLATE-3
E40011772	PLATE-5	E43502709	PLATE-9	E500125708A	PLATE-4
E40012238	PLATE-3	E43502711	PLATE-3	E500141016	PLATE-9
E40012239	PLATE-3	E43502754	PLATE-10	E50016170	PLATE-9
E40012250	PLATE-3	E43502755	PLATE-10	E500197087	PLATE-1
E40012250	PLATE-3	E43502764	PLATE-3	E500220013	PLATE-8
E40012270	PLATE-3	E43521745	PLATE-6	E500228048	PLATE-4
E40012525	PLATE-1	E45762512	PLATE-10	E500324066	PLATE-8
E40015121	PLATE-9	E45762512	PLATE-10	E5003430070	PLATE-3
E40015401	PLATE-10	E47124004	PLATE-9	E500405518	PLATE-25
E40015404	PLATE-13	E47177007	PLATE-10	E500450092	PLATE-12
E40015407	PLATE-13	E47177007	PLATE-4	E500460102	PLATE-6
E40015408	PLATE-13	E50000114	PLATE-3	E500460120	PLATE-6
E40015409	PLATE-13	E50000164	PLATE-10	E5005271054	PLATE-9
E40015418	PLATE-10	E50000421	PLATE-1	E500575545	PLATE-3
E40016141	PLATE-1	E50000437	PLATE-8	E500575549	PLATE-7
E40017748	PLATE-11	E50000437	PLATE-10	E500640030	PLATE-3
E40018334	PLATE-3	E50000475	PLATE-7	E500641036	PLATE-3
E40018356	PLATE-3	E50000506	PLATE-6	E500755006	PLATE-9
E40018357	PLATE-3	E50000506	PLATE-1	E500843036	PLATE-1
E40018625	PLATE-11.1	E50000506	PLATE-3	E500900038	PLATE-4
E40018625	PLATE-11	E50000613	PLATE-7	E5009520029	PLATE-9
E40018626	PLATE-11	E50000613	PLATE-12	E500985048	PLATE-9
E40018632	PLATE-11	E50001213143	PLATE-7	E52006205	PLATE-1
E40019528	PLATE-10	E50002296A	PLATE-4	E52006709	PLATE-8

129