Parts Catalog

Commercial Vehicle

ape Auto WC BS-IV Pass Cargo Common

PIAGGIO VEHICLES PRIVATE LIMITED
Registered Office: Bund Garden Road ,Opp. Residency Club , Pune (India)

Print Date: 07-Apr-2022

PLATES INDEX

Sr No.	Plate Name	Plate No.	Page No.
1	ENGINE ASSY. CNG LPG WATER COOLED	1.01	1-2
2	CRANKCASE ASSEMBLY & OIL PAN	1.02	3-4
3	CYLINDER & PISTON	1.03	5-6
4	CYLINDER HEAD ASSY.	1.04	7-8
5	ROCKER COVER ASSEMBLY	1.05	9-10
6	CONNECTING ROD AND CRANK SHAFT ASSEMBLY	1.06	11-12
7	CRANKSHAFT SUPPORT	1.07	13-14
8	PTO COVER	1.08	15-16
9	PRESSURE RELIEF VALVE, SPIN ON OIL FILTER	1.09	17-18
10	LUB OIL PUMP & LOP DRIVE GEAR	1.10	19-20
11	CAM SHAFT, PUSH ROD & ROCKER ARM	1.11	21-22
12	FLYWHEEL, FMA, STARTER MOTOR & RR UNIT	1.12	23-24
13	CARBURETOR, ELECTRONIC FEED PUMP & PETROL FILTER	1.13	25-26
14	IGNITION SYSTEM	1.14	27-28
15	WATER PUMP & BELT TENSIONER ASSEMBLY	1.15	29-30
16	MUFFLER AND GASKET ASSEMBLY	1.16	31-32
17	AIR FILTER ASSEMBLY	1.17	33-34
18	PETROL TANK & PIPES	1.18	35-36
19	RADIATOR & COOLING SYSTEMS	1.19	37-38
20	ENGINE SIDE COVER AND MAIN HOUSING	1.20	39-40
21	MAINSHAFT, SPEED GEARS AND CLUSTER GEAR	1.21	41-42
22	GEAR SHIFTER AND ITS CONTROL MECHANISM	1.22	43-44
23	DIFFERENTIAL UNIT, FARE METER HOUSING AND SPEEDO DRIVE	1.23	45-50
24	CLUTCH AND CLUTCH COVER	1.24	51-54
25	ENGINE SUPPORT	1.25	55-58
26	MAIN FRAME ASSY. PASSENGER & STICKER	2.01	59-60
27	CARGO CHASSIS FRAME, WINDSHIELD, GLASS & SEAT	2.02	61-64
28	DOORS, STICKERS, TOOLS & WHEELS	2.03	65-70
29	DASHBOARD, HEADLAMP ASSY. & FRONT MUDGAURD	2.04	71-72
30	CHASSIS COMPONENTS	2.05	73-76

Print Date: 07-Apr-2022

PLATES INDEX

Sr No.	Plate Name	Plate No.	Page No.
31	RUBBER MAT, REAR MUDGUARD	2.06	77-80
32	REAR SUSPENSION	2.07	81-84
33	STEERING COLUMN AND FRONT SUSPENSION	2.08	85-88
34	HANDLE BAR AND CONTROL	2.09	89-92
35	BRAKE - TANDEM MASTER CYLINDER, BRAKE PIPE AND HAND BRAKES	2.10	93-96
36	FRONT MUDGUARD & HEAD LAMP ASSY.	2.11	97-98
37	ELECTRICAL DEVICES	2.12	99-104
38	PASSENGER AUTO RICKSHAW BODY	2.13	105-110
39	OPEN BOX BODY	2.14	111-114
40	CABLE HARNESS	2.15	115-116
41	FRONT BRAKE ASSEMBLY SELF ADJUSTING (DIA 180 X 40 MM)	2.16	117-118
42	REAR BRAKE ASSEMBLY SELF ADJUSTING (DIA 180 X 40 MM)	2.17	119-120
43	CNG KIT	2.18	121-122
44	TWO STAGE CNG REGULATOR	2.19	123-124
45	FIRST STAGE REDUCTION UNIT	2.20	125-126
46	LPG Kit	2.21	127-128
47	TWO STAGE LPG REGULATOR	2.22	129-130
48	CLUCTH & CLUCTH COVER	24.1	131-134
49	ALUMINIUM CLUTCH ASSEMBLY	24.A	135-136
50	CLUTCH & COVER ASSEMBLY (FOR ALUMINIUM CLUTCH)	24.B	137-138

Print Date: 07-Apr-2022

PICTORIAL PLATES INDEX

1.01 ENGINE ASSY. CNG LPG WATER COOLED

Page No. :1-2

1.02 CRANKCASE ASSEMBLY & OIL PAN

Page No. :3-4

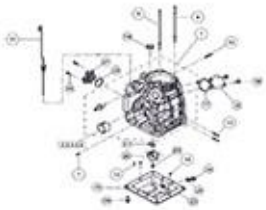

1.03 CYLINDER & PISTON

Page No. :5-6

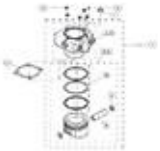

1.04 CYLINDER HEAD ASSY.

Page No. :7-8

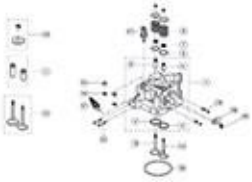

1.05 ROCKER COVER ASSEMBLY

Page No. :9-10

1.06 CONNECTING ROD AND CRANK SHAFT ASSEMBLY

Page No. :11-12

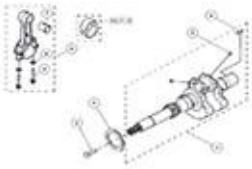

1.07 CRANKSHAFT SUPPORT

Page No. :13-14

1.08 PTO COVER

Page No. :15-16

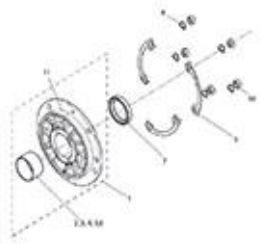

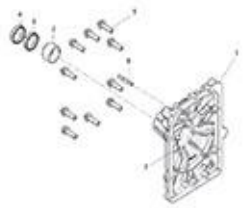

Print Date: 07-Apr-2022

PICTORIAL PLATES INDEX

1.09 **PRESSURE RELIEF VALVE, SPIN ON OIL FILTER**

Page No. :17-18

1.10 **LUB OIL PUMP & LOP DRIVE GEAR**

Page No. :19-20

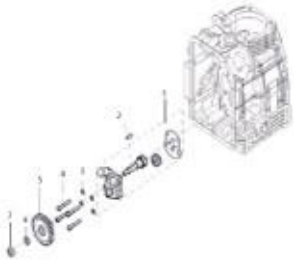

1.11 **CAM SHAFT, PUSH ROD & ROCKER ARM**

Page No. :21-22

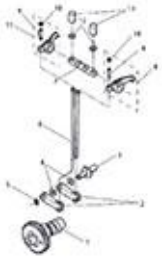

1.12 **FLYWHEEL, FMA, STARTER MOTOR & RR UNIT**

Page No. :23-24

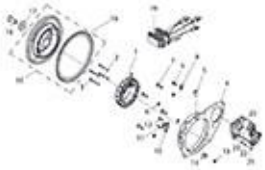

1.13 **CARBURETOR, ELECTRONIC FEED PUMP & PETROL FILTER**

Page No. :25-26

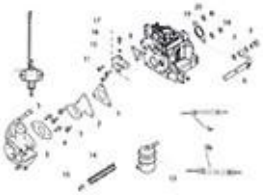

1.14 **IGNITION SYSTEM**

Page No. :27-28

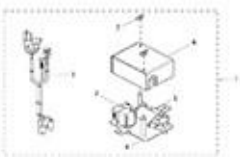

1.15 **WATER PUMP & BELT TENSIONER ASSEMBLY**

Page No. :29-30

1.16 **MUFFLER AND GASKET ASSEMBLY**

Page No. :31-32

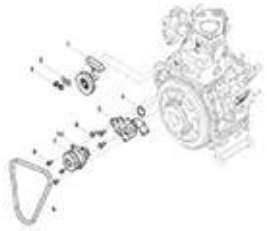

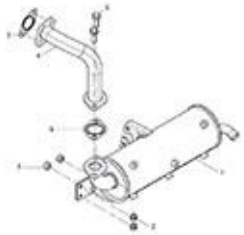

Print Date: 07-Apr-2022

PICTORIAL PLATES INDEX

1.17 AIR FILTER ASSEMBLY

Page No. :33-34

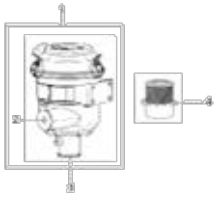

1.18 PETROL TANK & PIPES

Page No. :35-36

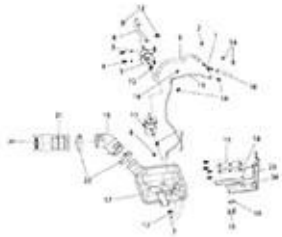

1.19 RADIATOR & COOLING SYSTEMS

Page No. :37-38

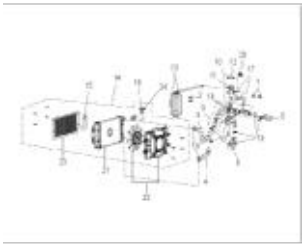

1.20 ENGINE SIDE COVER AND MAIN HOUSING

Page No. :39-40

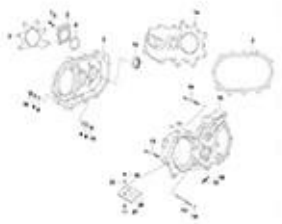

1.21 MAINSHAFT, SPEED GEARS AND CLUSTER GEAR

Page No. :41-42

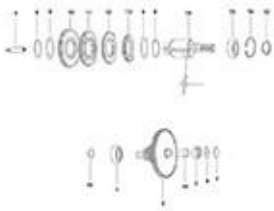

1.22 GEAR SHIFTER AND ITS CONTROL MECHANISM

Page No. :43-44

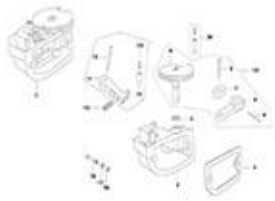

1.23 DIFFERENTIAL UNIT, FARE METER HOUSING AND SPEEDO DRIVE

Page No. :45-50

1.24 CLUTCH AND CLUTCH COVER

Page No. :51-54

Print Date: 07-Apr-2022

PICTORIAL PLATES INDEX

1.25 ENGINE SUPPORT

Page No. :55-58

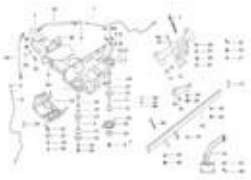

2.01 MAIN FRAME ASSY. PASSENGER & STICKER

Page No. :59-60

2.02 CARGO CHASSIS FRAME, WINDSHIELD, GLASS & SEAT

Page No. :61-64

2.03 DOORS, STICKERS, TOOLS & WHEELS

Page No. :65-70

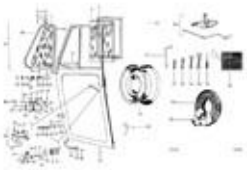

2.04 DASHBOARD, HEADLAMP ASSY. & FRONT MUDGAURD

Page No. :71-72

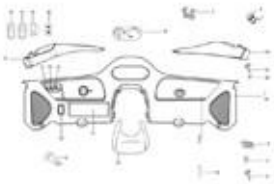

2.05 CHASSIS COMPONENTS

Page No. :73-76

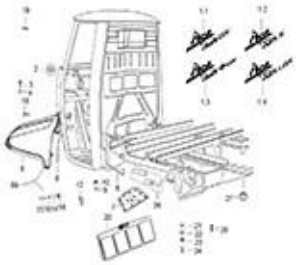

2.06 RUBBER MAT, REAR MUDGUARD

Page No. :77-80

2.07 REAR SUSPENSION

Page No. :81-84

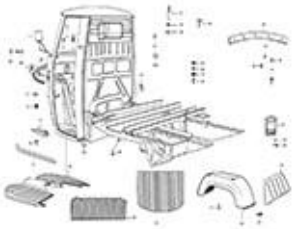

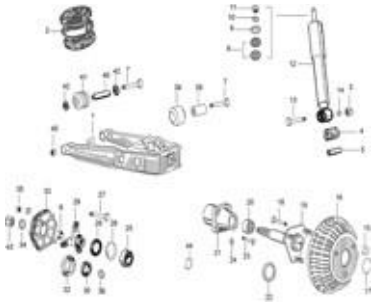

Print Date: 07-Apr-2022

PICTORIAL PLATES INDEX

2.08 STEERING COLUMN AND FRONT SUSPENSION

Page No. :85-88

2.09 HANDLE BAR AND CONTROL

Page No. :89-92

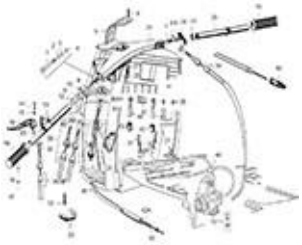

2.10 BRAKE - TANDEM MASTER CYLINDER, BRAKE PIPE AND HAND BRAKES

Page No. :93-96

2.11 FRONT MUDGUARD & HEAD LAMP ASSY.

Page No. :97-98

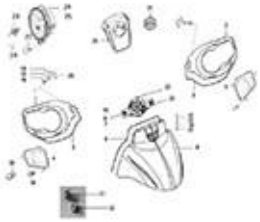

2.12 ELECTRICAL DEVICES

Page No. :99-104

2.13 PASSENGER AUTO RICKSHAW BODY

Page No. :105-110

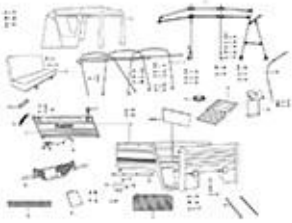

2.14 OPEN BOX BODY

Page No. :111-114

2.15 CABLE HARNESS

Page No. :115-116

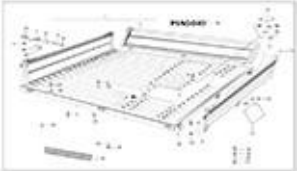

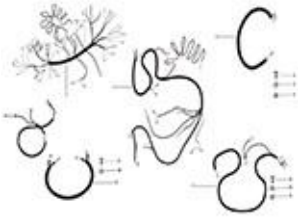

Print Date: 07-Apr-2022

PICTORIAL PLATES INDEX

2.16 FRONT BRAKE ASSEMBLY SELF ADJUSTING (DIA 180 X 40 MM)

Page No. :117-118

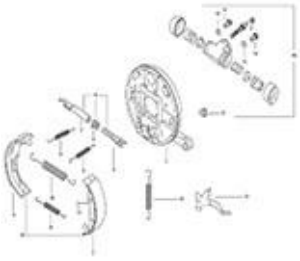

2.17 REAR BRAKE ASSEMBLY SELF ADJUSTING (DIA 180 X 40 MM)

Page No. :119-120

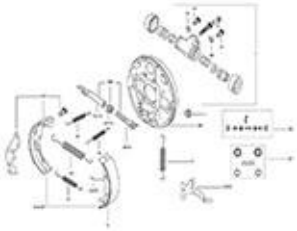

2.18 CNG KIT

Page No. :121-122

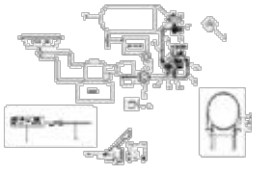

2.19 TWO STAGE CNG REGULATOR

Page No. :123-124

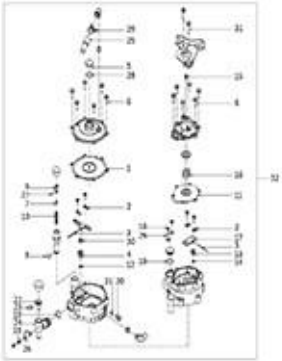

2.20 FIRST STAGE REDUCTION UNIT

Page No. :125-126

2.21 LPG Kit

Page No. :127-128

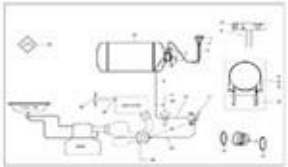

2.22 TWO STAGE LPG REGULATOR

Page No. :129-130

PLATE-24.1 CLUCTH & CLUCTH COVER

Page No. :131-134

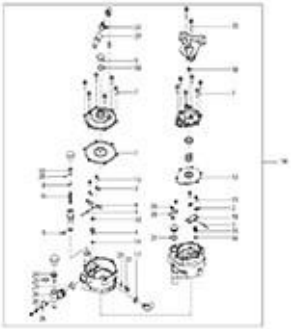

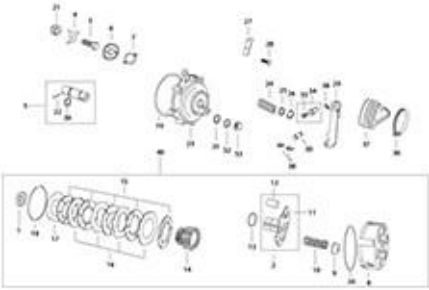

Print Date: 07-Apr-2022

PICTORIAL PLATES INDEX

PLATE-24.A ALUMINIUM CLUTCH ASSEMBLY

Page No. :135-136

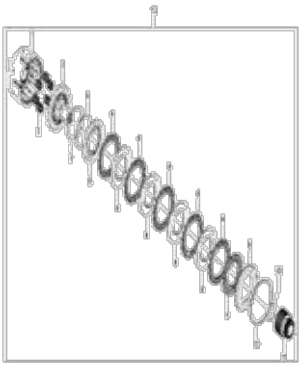

PLATE-24.B CLUTCH & COVER ASSEMBLY (FOR ALUMINIUM CLUTCH)

Page No. :137-138

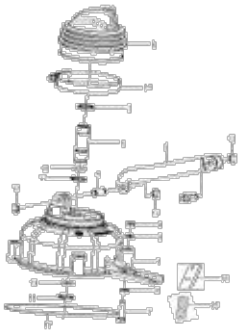

Print Date: 07-Apr-2022

1.01

ENGINE ASSY. CNG LPG WATER COOLED

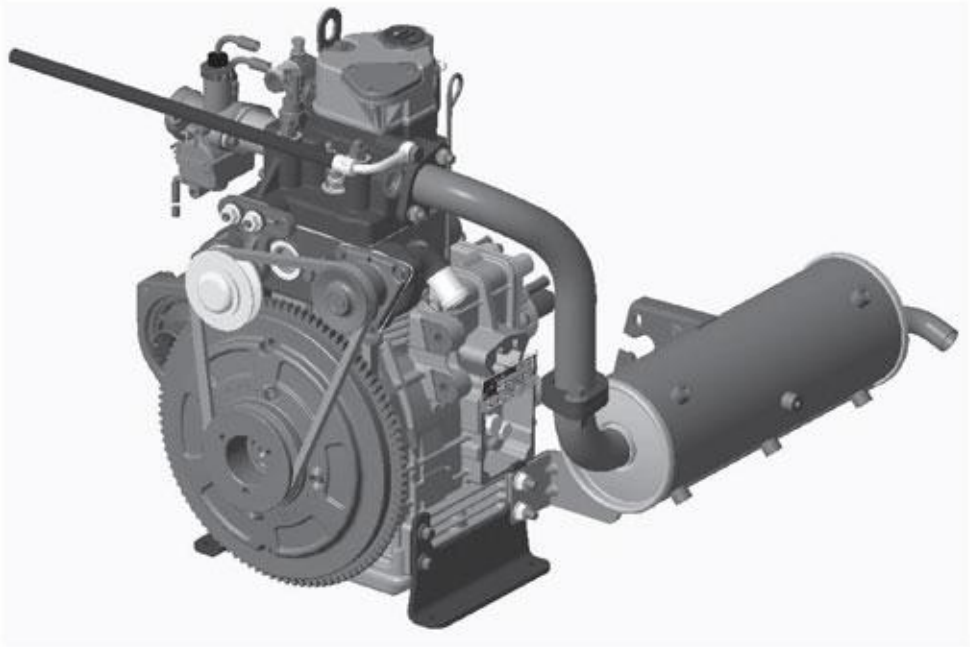

1

Print Date: 07-Apr-2022

1.01

ENGINE ASSY. CNG LPG WATER COOLED

Fig. No.	Part No.	Description	Qty	Remarks
1	B078285	ENGINE GL400 WG (CNG LPG)	1	

2

Print Date: 07-Apr-2022

1.02

CRANKCASE ASSEMBLY & OIL PAN

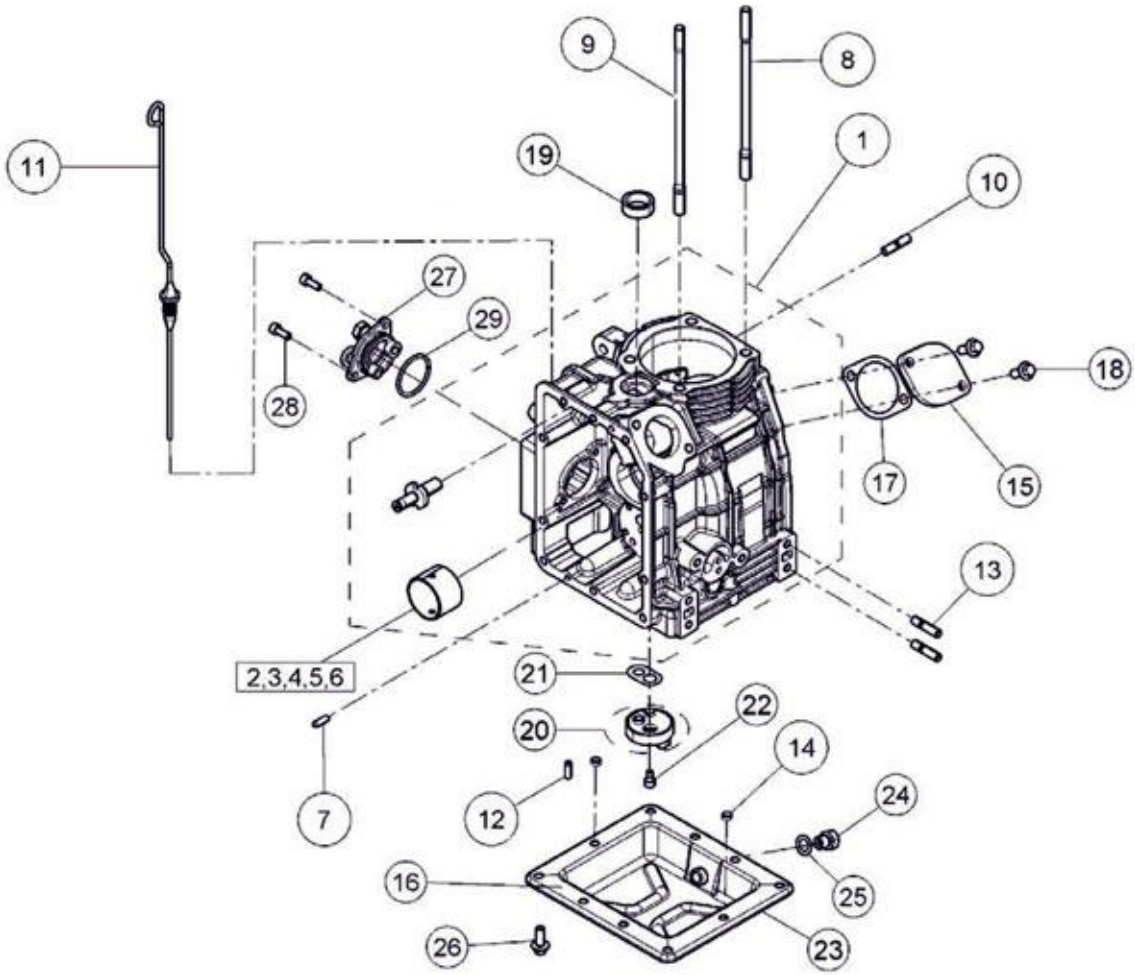
9
8
11
19
1
10
27
29
28
18
17
15
13
2,3,4,5,6
21
22
20
14
7
12
24
16
25
26
23

3

Print Date: 07-Apr-2022

1.02

CRANKCASE ASSEMBLY & OIL PAN

Fig. No.	Part No.	Description	Qty	Remarks
1	E40012578	CRANKCASE ASSEMBLY (WITH BUSH AND CF PIN L.H.)	1	WITH AVMPAD (REARENGINE)
2	E40002263	BUSH CRANKCASE STD	1	
3	E40002264	BUSH CRANKCASE 0.25 MM U/S	1	
4	E40002265	BUSH CRANKCASE 0.50 MM U/S	1	
5	E40002266	BUSH CRANKCASE 0.75 MM U/S	1	
6	E40002267	BUSH CRANKCASE 1.00 MM U/S	1	
7	E276846055	DOWEL -PIN	2	
8	E5406850106	STUD CYLINDER HEAD	2	
9	E5406850108	STUD CYLINDER HEAD	2	
10	E271678054	STUD FWE SIDE	5	
11	E40009712	DIPSTICK	1	
12	E500843036	DOWEL PIN	1	
13	E50000506	STUD M8X1.25X34	2	
14	E500197087	SLEEVE - OIL PAN IN CRANK CASE	2	
15	ED33240	BLANK PLATE FOR FIP HOLE	1	
16	940048	LIQUID SEALANT	1	
17	ED42723	JOINT FOR FIP CASING (0.5MM THICK)	2	
18	E50002805	COLLER BOLT M8 X 1.25 X 22	1	
19	E40016404	SEAL PUSH ROD	1	
20	E50008099	OIL PAN	1	
21	E40016141	JOINT SUCTION BULB	1	
22	E99732047	SCREW FOR BULB	1	
23	E50002805	COLLER BOLT M8 X 1.25 X 22	1	
24	E50000421	MAGNETIC DRAIN PLUG M12X1.5	1	
25	E250467014	JOINT 12X19X1(JOINT DRAIN PLUG)	10	
26	E50008883	SUCTION BULB ASSY.	1	
27	ED33369	GOV. SUPPORT ASSY. FOR HOLE CLOSING	2	
28	E270973010	CAP SCREW (TUBE OIL ADAPTER)	1	
29	E52006205	O RING	1	

4

Print Date: 07-Apr-2022

1.03
CYLINDER & PISTON

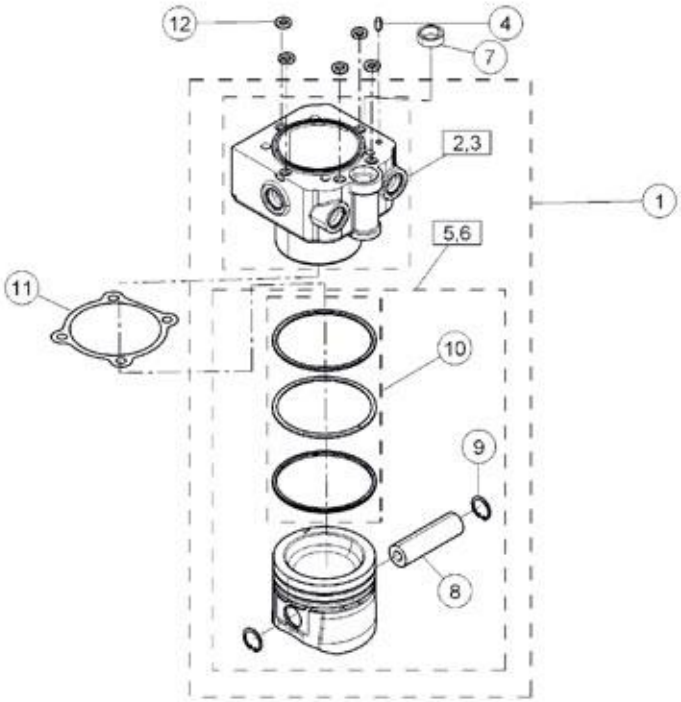
12
4
7
2,3
1
5,6
11
10
9
8

5

Print Date: 07-Apr-2022

1.03

CYLINDER & PISTON

Fig. No.	Part No.	Description	Qty	Remarks
1	E40020562	CYLINDER & PISTON ASSLY KIT	1	
2	E40002096	CYLINDER BARREL WITH CORE PLUG GRADE A	1	QTY. NO. 1EITHERGRADE A/B
3	E40012004	CYLINDER BARREL WITH CORE PLUG GRADE B	1	QTY. NO. 1EITHERGRADE A/B
4	E50000911	DOWEL PIN DIA. 6X14	1	
5	E40020563	PISTON ASSY GRADE A	1	QTY. NO. 1BASED ONCYLINDERGRADE
6	E40020564	PISTON ASSY GRADE B	1	QTY. NO. 1BASED ONCYLINDERGRADE
7	E40016404	SEAL PUSH ROD	2	
8	E5408480091A	GUGEON PIN	1	
9	E3124017	CIRCLIP 500 SR	1	
10	E40011420PA	KIT OF PISTON RING MOD BS-II	5	
11	E40026133	JOINT-CYLINDER BARREL TO CRANKCASE (0.3MM)	1	
12	E40006212	SEAL- WATER HOLE	1	

6

Print Date: 07-Apr-2022

1.04
CYLINDER HEAD ASSY.

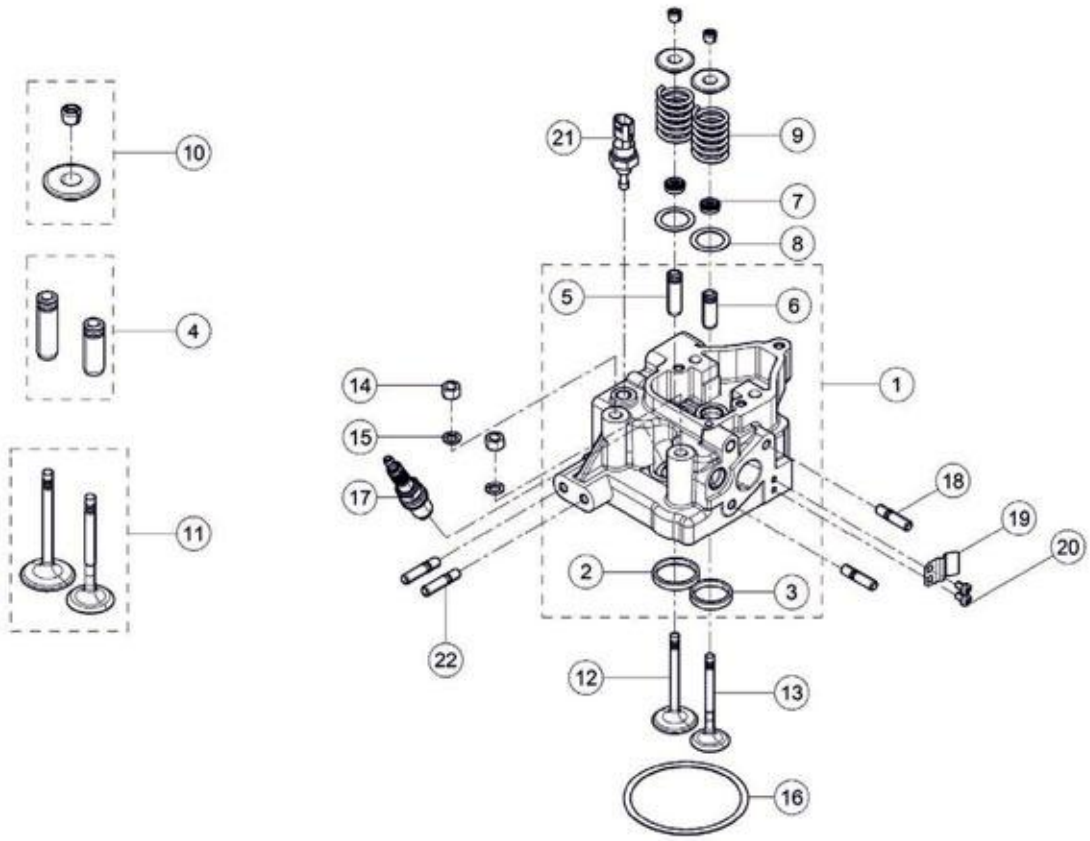
10
4
11
21
9
7
8
5
6
1
14
15
17
18
19
20
2
3
22
12
13
16

7

Print Date: 07-Apr-2022

1.04

CYLINDER HEAD ASSY.

Fig. No.	Part No.	Description	Qty	Remarks
1	E40028324	CYLINDER HEAD ASSLY	1	
2	E40012259	VALVE SEAT INTAKE	1	
3	E40012260	VALVE SEAT EXHAUST	1	
4	NS	NOT SERVICEABLE	1	
5	NS 1	VALVE GUIDE INTAKE	1	
6	NS 2	VALVE GUIDE EXHAUST	1	
7	E50006342	VALVE STEM SEAL	2	
8	E5003430070	DISC	2	
9	E500575545	VALVE SPRING	2	
10	E87022230	COLLET & RATAINER ASSEMBLY SET	2	
11	E40022216	VALVE SET CONSISTING OF SR NO 15 & 16	1	
12	E40028329	VALVE INTAKE BIMETALLIC-MULTI GROOVE	1	
13	ED33454	EXHAUST VALVE	1	
14	E93240076	NUT	2	
15	E97626065	PLAIN WASHER	2	
16	E43506184	JOINT CYLINDER HEAD 1.0 MM	1	
17	E40024023	SPARK PLUG BOSCH FR7DE	1	
18	E50000506	STUD M8X1.25X34	2	
19	E40018082	CLAMP DIP STICK	1	
20	E40020430	PHILIPS HEAD SCREW (M5X8)	2	
21	E34G130002	TEMPERATURE SWITCH	1	
22	E07500508	STUD M8X1.25X37	2	

8

Print Date: 07-Apr-2022

1.05

ROCKER COVER ASSEMBLY

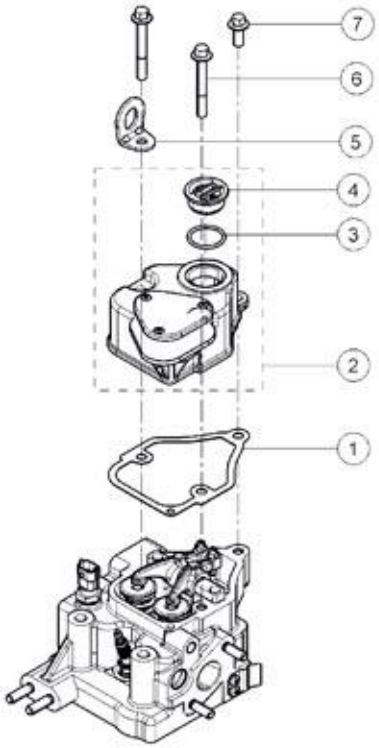
7
6
5
4
3
2
1

9

Print Date: 07-Apr-2022

1.05

ROCKER COVER ASSEMBLY

Fig. No.	Part No.	Description	Qty	Remarks
1	E40036136	GASKET : ROCKER COVER	1	WITH AVMPAD (REARENGINE)
2	E40006653	ROCKER COVER ASSLY WITH OIL FILLING PLUGS &'O' RINGS	1	
3	E40006213	O' RING	1	
4	E40002407	OIL FILLING PLUG	1	
5	E904850603	LIFTING HOOK	1	
6	ESP650DNB020	HEX.HEAD FLANGE BOLT M8X110	2	
7	E50002805	COLLER BOLT M8 X 1.25 X 22	1	

10

Print Date: 07-Apr-2022

1.06

CONNECTING ROD AND CRANK SHAFT ASSEMBLY

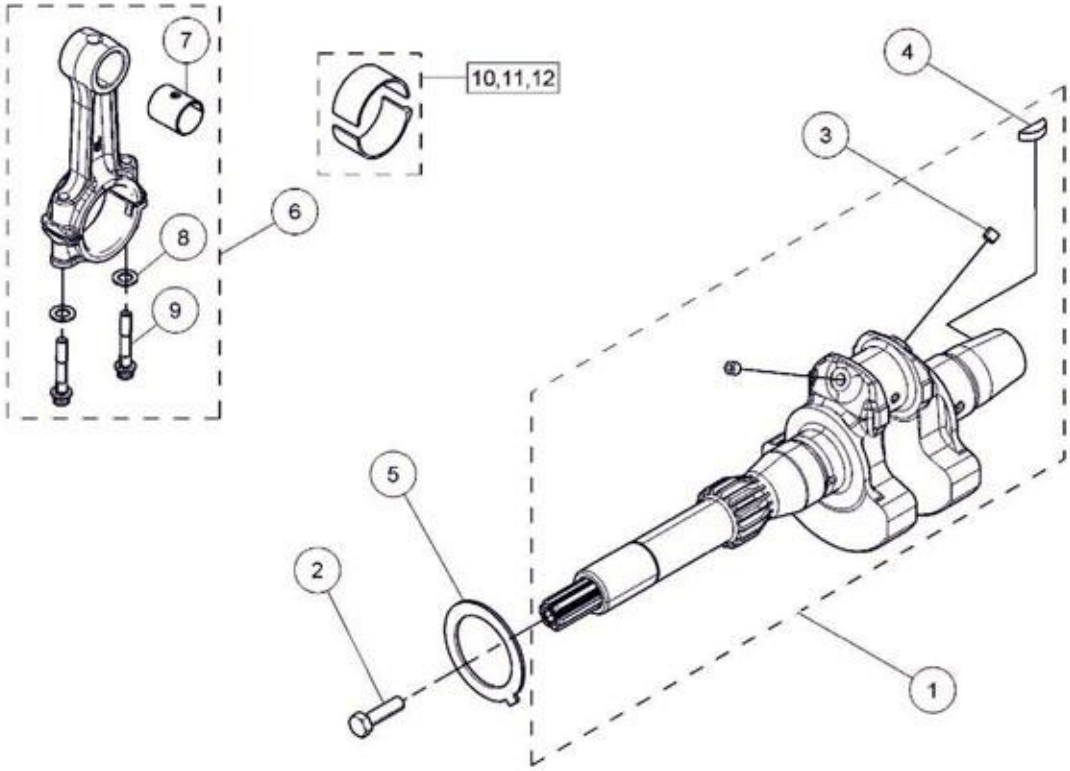
7
10,11,12
4
3
6
8
9
5
2
1

11

Print Date: 07-Apr-2022

1.06

CONNECTING ROD AND CRANK SHAFT ASSEMBLY

Fig. No.	Part No.	Description	Qty	Remarks
1	E50006060	CRANKSHAFT	1	BSII
2	E43520139	BOLT	1	
3	E500900038	PLUG OIL HOLE	2	
4	E500228048	KEY - F.W.E.	1	
5	E500125708A	THRUST WASHER	1	
6	E50009023	CONNECTING ROD ASSY.	1	
7	E50009205	BUSH SMALL END CON ROD	1	
8	E50000307A	PLAIN WASHER	2	
9	E50000160A	BOLT M8X1X45 (CON. ROD)	2	
10	E50002296A	LARGE END BEARING(SET OF 2)	1	
11	NS	NOT SERVICEABLE	1	NS
12	NS	NOT SERVICEABLE	1	NS

12

Print Date: 07-Apr-2022

1.07
CRANKSHAFT SUPPORT

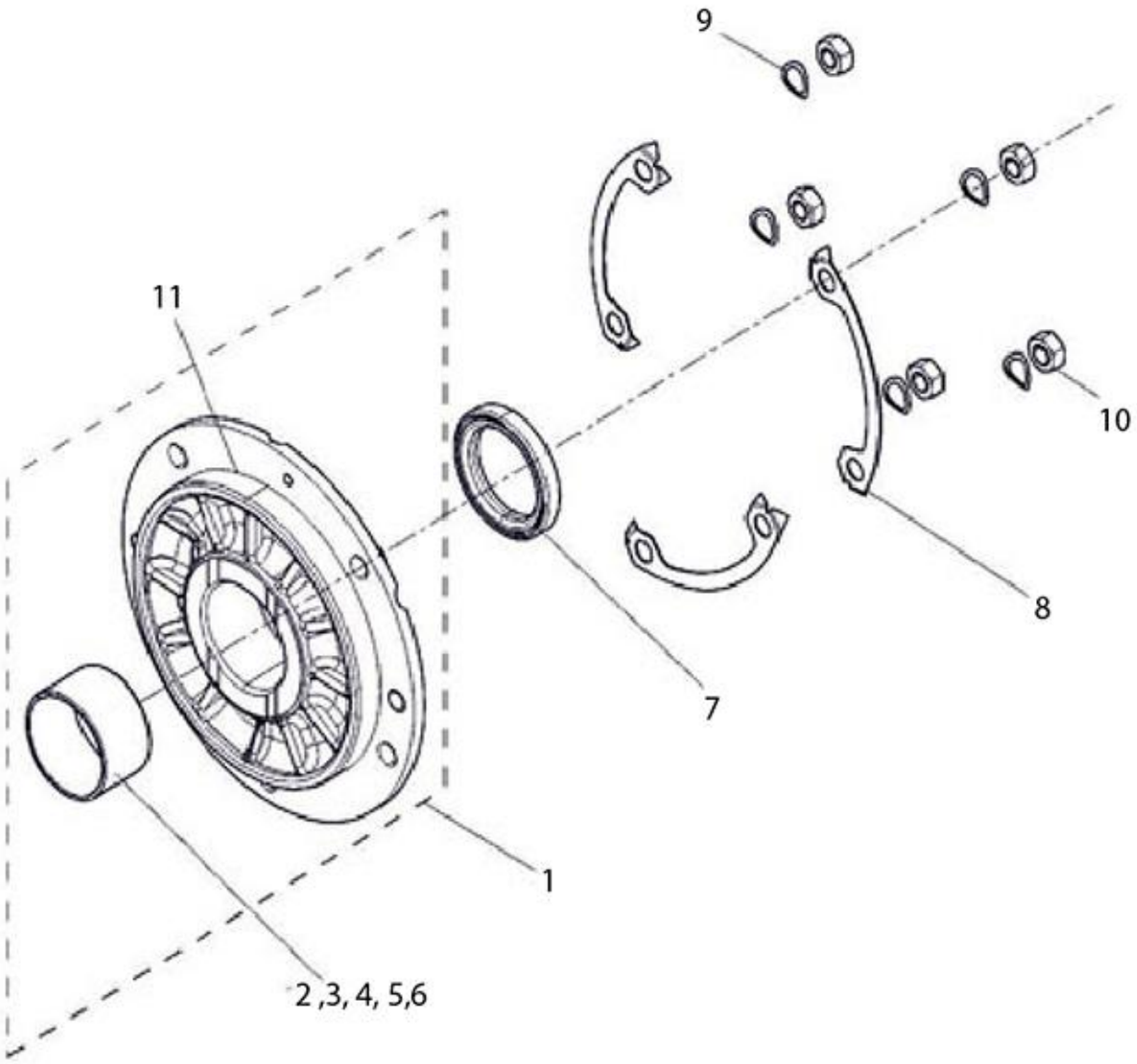
9
11
10
8
7
1
2 ,3, 4, 5,6

13

Print Date: 07-Apr-2022

1.07

CRANKSHAFT SUPPORT

Fig. No.	Part No.	Description	Qty	Remarks
1	E40011772	CRANKSHAFT SUPPORT ASSY. GL400	1	
2	E53002206	BUSH,FWE STD.	1	
3	E53002207	BUSH FWE SIDE 0.25 MM U/S	1	
4	E53002208	BUSH FWE SIDE 0.50 MM U/S	1	
5	E53002209	BUSH FWE SIDE 0.75 MM U/S	1	
6	E53002210	BUSH FWE SIDE 1.00 MM U/S	1	
7	ED42548	OILSEAL 520/530/GL400	1	
8	ESK8832	RETAINER PLATE	3	
9	E250755507	SPRING WASHER FOR M8	5	
10	E9324018	NUT M8 X 1.25 X 6.5	5	
11	940048	LIQUID SEALANT	1	

14

Print Date: 07-Apr-2022

1.08
PTO COVER

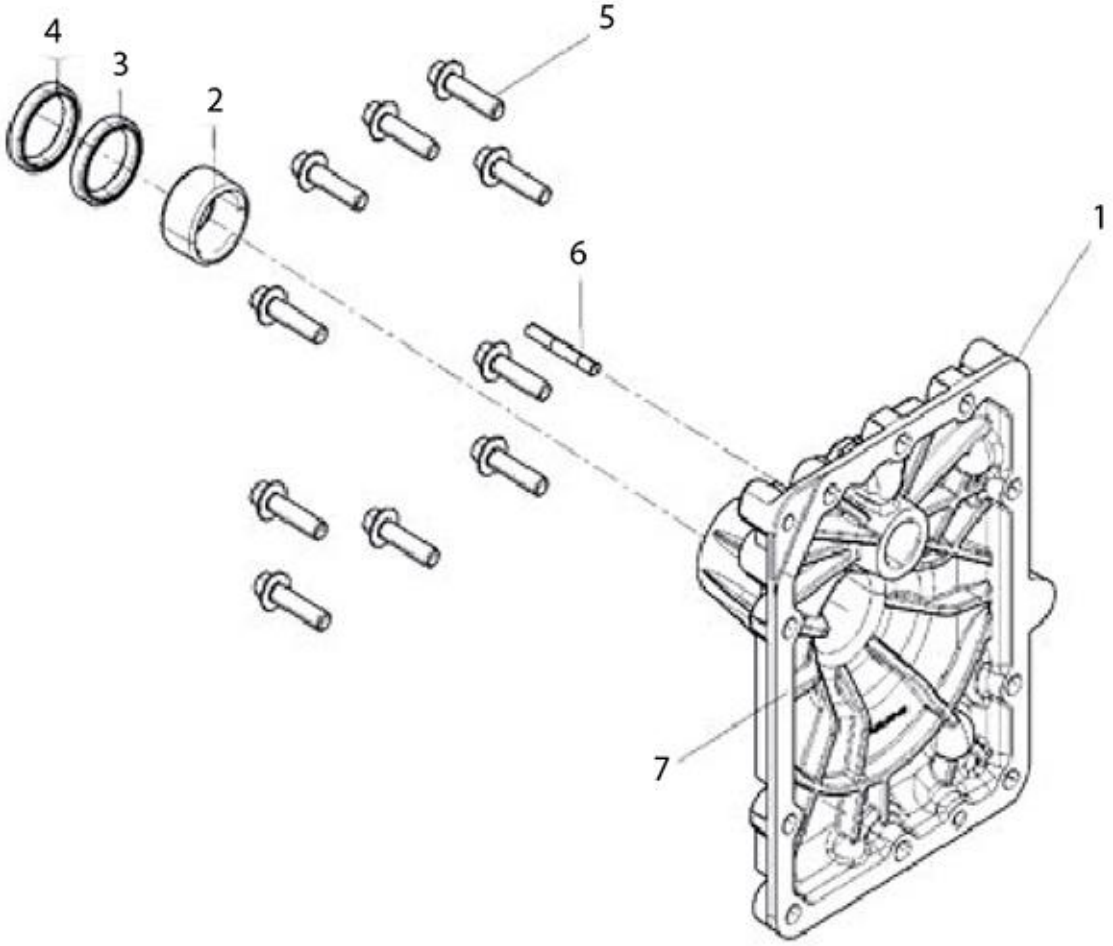
4
3
2
5
6
1
7

15

Print Date: 07-Apr-2022

1.08
PTO COVER

Fig. No.	Part No.	Description	Qty	Remarks
1	E43521745	COVER PTO (SIX STUD)	1	
2	E90303028	BEARING NEEDLE	1	
3	E9121356	OIL SEAL	1	
4	E50006328	OIL SEAL	1	
5	E07502804	COLLER BOLT M8 X 1.25 X 30	10	
6	ESK4336	STUD M8 X 1.25 X 57(PTO COVER)	6	
7	940048	LIQUID SEALANT	1	

16

Print Date: 07-Apr-2022

1.09

PRESSURE RELIEF VALVE, SPIN ON OIL FILTER

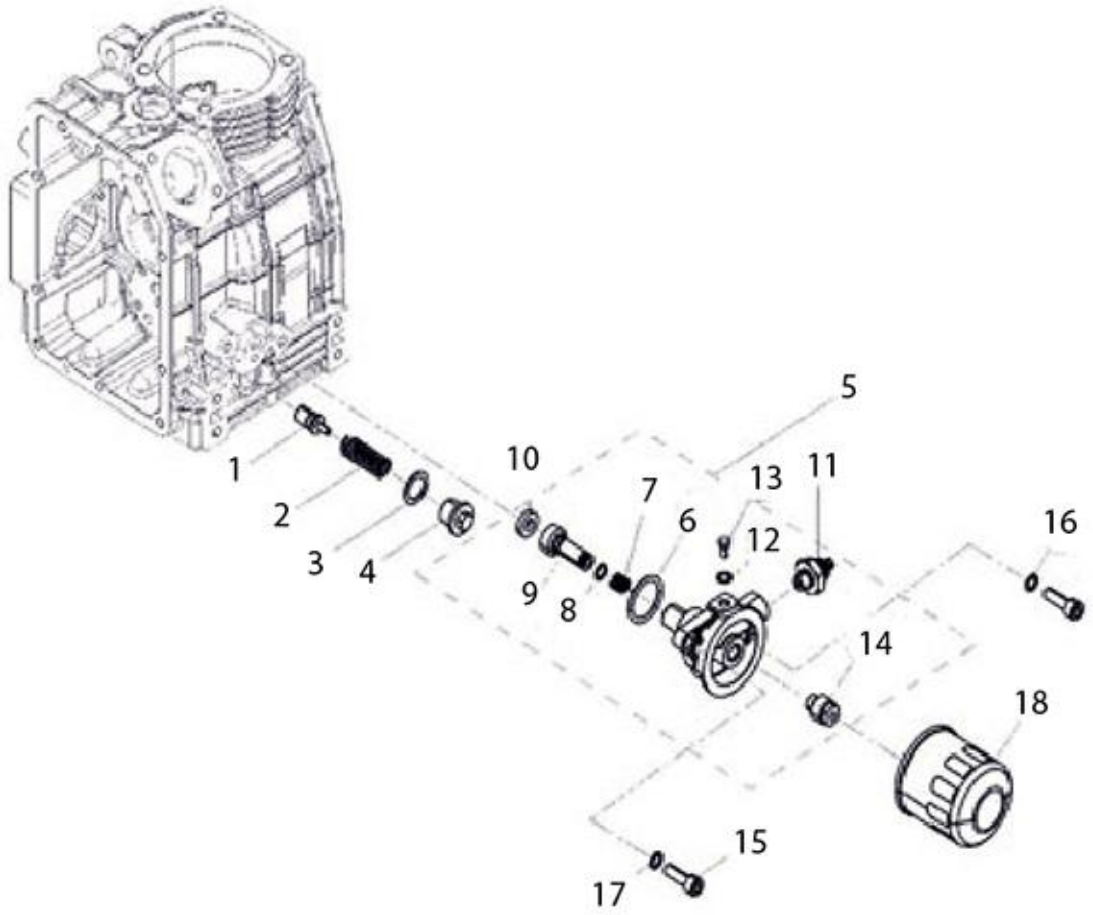
1
2
3
4
5
6
7
8
9
10
11
12
13
14
15
16
17
18

17

Print Date: 07-Apr-2022

1.09

PRESSURE RELIEF VALVE, SPIN ON OIL FILTER

Fig. No.	Part No.	Description	Qty	Remarks
1	E5609680013	RELIEF VALVE BODY	1	
2	E500575549	SPRING	1	
3	E200467021	JOINT	1	
4	E50000475	PLUG RELIEF VALVE	1	
5	E40001816	FLANGE ASSY. L O FILTER	1	
6	E260120016	O RING	1	
7	E50005625006	SPRING	1	
8	E904120213	O RING	1	
9	E50006495029	PISTON	1	
10	E50001213143	O RING LUB OIL FILTER	1	
11	ED41447	OIL PRESSURE SWITCH - PARALLEL THREAD	1	
12	E200467003	JOINT	1	
13	E1177001	BOLT	1	
14	ED41208	STUD	1	
15	E260973027	CAP SCREW M8X 1.25	2	
16	E200467003	JOINT	1	
17	E50000613	MACHINED WASHER 16X8.1X2	1	
18	ED42244	SPIN ON LUB OIL FILTER	1	

18

Print Date: 07-Apr-2022

1.10

LUB OIL PUMP & LOP DRIVE GEAR

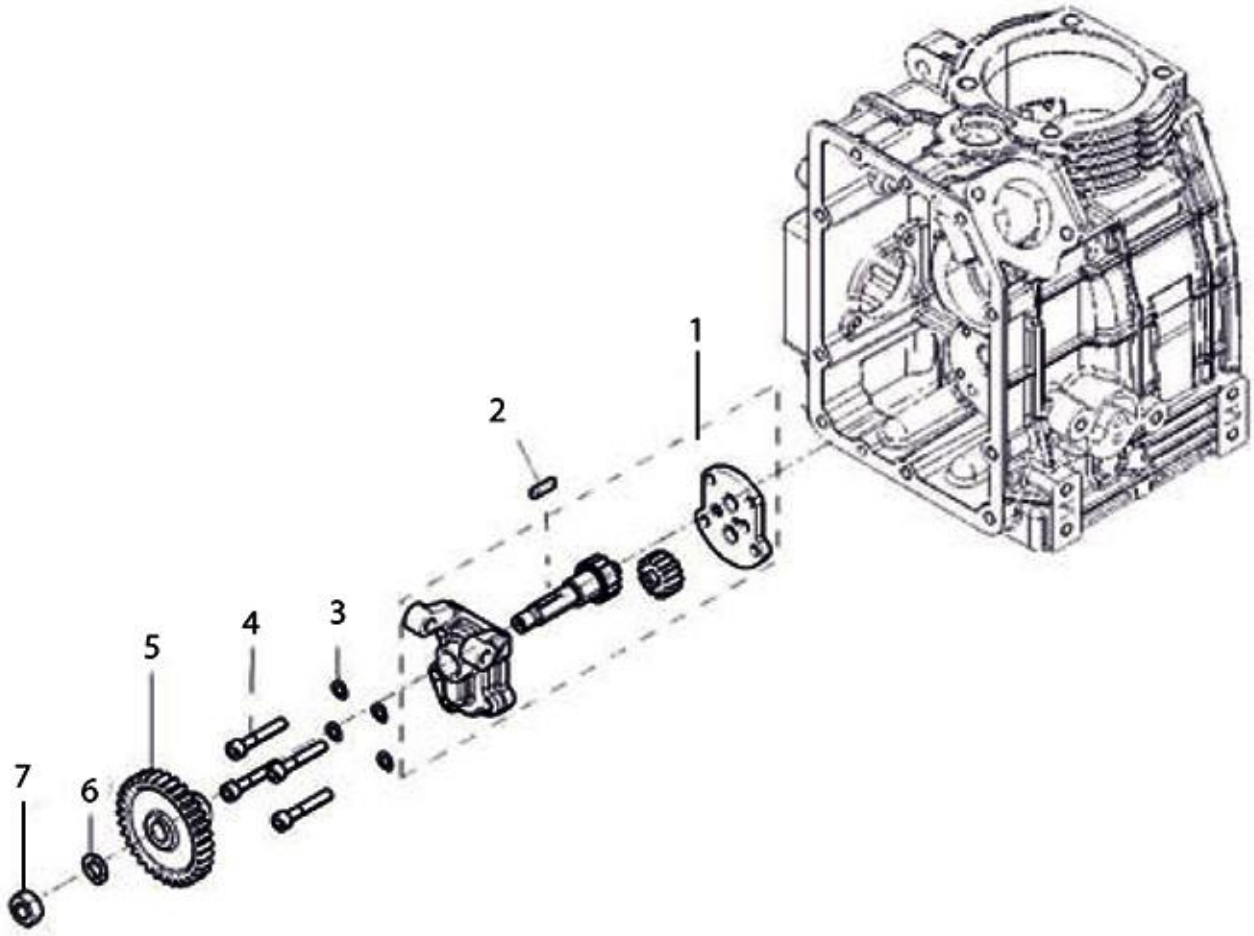
1
2
3
4
5
6
7

19

Print Date: 07-Apr-2022

1.10

LUB OIL PUMP & LOP DRIVE GEAR

Fig. No.	Part No.	Description	Qty	Remarks
1	E52006709	LUB OIL PUMP ASSY.	1	
2	E500220013	KEY	1	
3	E250755504	SPRING WASHER FOR M6	4	
4	E50000437	HEX SOCKET HEAD SCREW	4	
5	E40009683	GEAR LUB. OIL PUMP	1	
6	E40009683	GEAR LUB. OIL PUMP	1	
7	E500324066	NUT	1	

20

Print Date: 07-Apr-2022

1.11

CAM SHAFT, PUSH ROD & ROCKER ARM

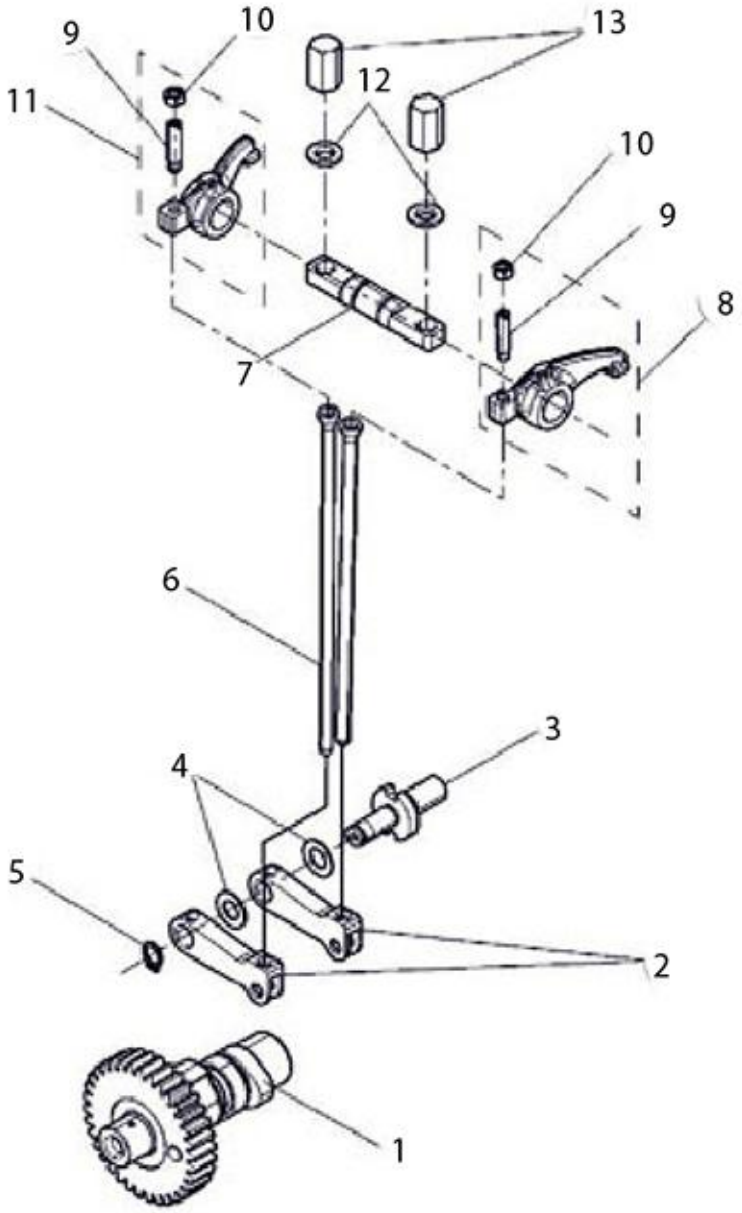
9
10
13
11
12
10
9
8
7
6
3
4
5
2
1

21

Print Date: 07-Apr-2022

1.11

CAM SHAFT, PUSH ROD & ROCKER ARM

Fig. No.	Part No.	Description	Qty	Remarks
1	E400060112	CAM SHAFT (BSII)	1	Common for BSII & BSIII
2	E5005271054	CAM FOLLOWER LEVER	2	
3	ED30956	PIN LH THREAD	1	
4	E500755006	DISTANCE PIECE	2	
5	E47124004	CIRCLIP	1	
6	E500141016	PUSH ROD	2	
7	E5406045038	ROCKER FULCRUM	1	
8	E40015133	ROCKER LEVER ASSLY INTAKE WITH 11 & 12	1	
9	E500985048	ADJUSTING SCREW	1	
10	E105324008	NUT HEX -OIL SEPARATOR MOUNTING	1	
11	E40015134	ROCKER LEVER ASSLY EXHAUST	1	
12	E97626065	PLAIN WASHER	2	
13	ED40165	DOME NUT	2	

22

Print Date: 07-Apr-2022

1.12

FLYWHEEL, FMA, STARTER MOTOR & RR UNIT

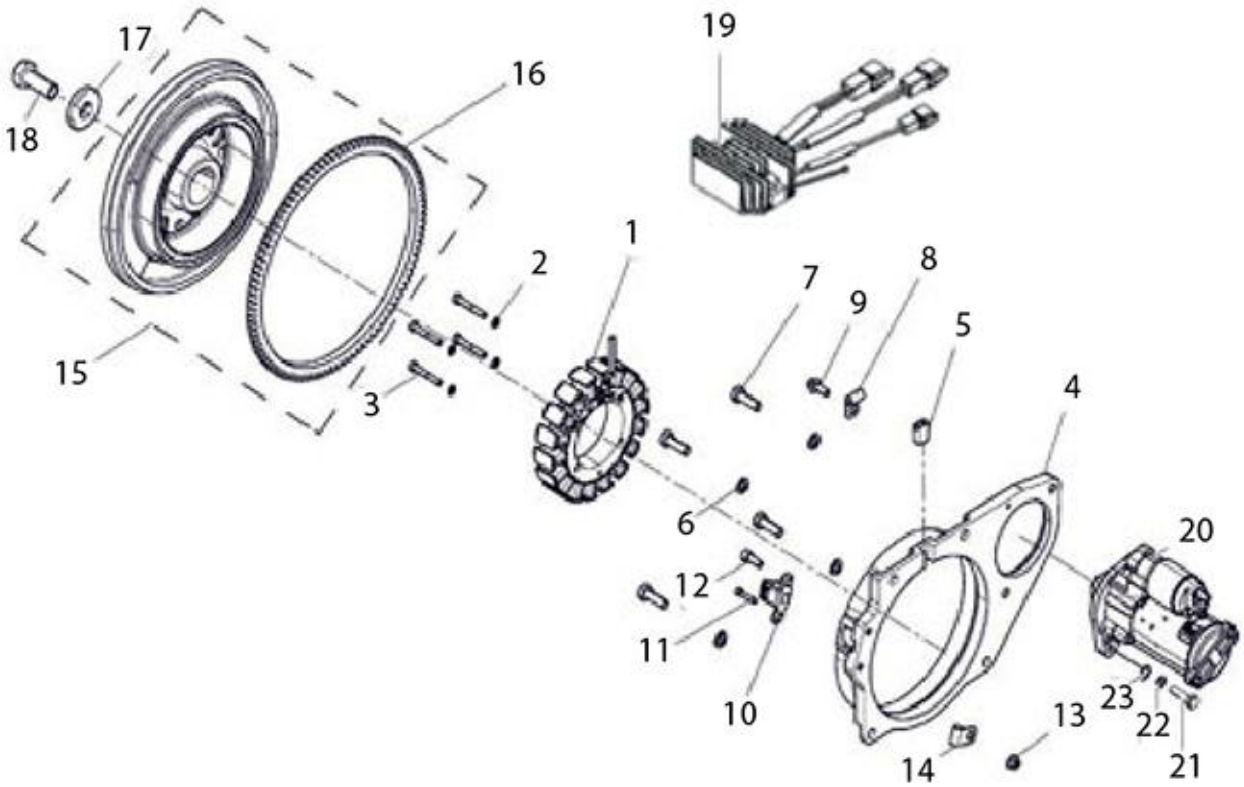
17
18
16
19
1
2
7
9
8
5
15
3
4
6
20
12
11
10
23
22
13
14
21

23

Print Date: 07-Apr-2022

1.12

FLYWHEEL, FMA, STARTER MOTOR & RR UNIT

Fig. No.	Part No.	Description	Qty	Remarks
1	E40015456	STATOR ASSEMBLY	1	
2	E26756503	SPRING WASHER	4	
3	E40002829	HEX. SCREW M5X0.8X35 FOR STATOR MTG.	4	
4	E40001797	STARTER MOUNTING PLATE	1	
5	E40005592	BUSH FOR FMA CABLE	1	
6	E1756507	SPRING WASHER M8	4	
7	E9177006	BOLT M8X1.25X25	4	
8	E6193361721	CLAMP	1	
9	ESP650DNB011	HEX HEAD FLANGE BOLT M6X16	1	
10	E40005439	PICK UP COIL WITH DUST SEAL	1	
11	E87000496	SOCKET HEAD CAP SCREW M6X1X25	1	
12	E270973010	CAP SCREW (TUBE OIL ADAPTER)	1	
13	E07502811	COLLAR NUT M6 X 1	1	
14	ESK8801	CLAMP FOR PICK UP COIL	1	
15	E40019549	FLYWHEEL WITH MAGNET & RING GEAR	1	
16	E40009648	RING GEAR STARTER 0.7 KW (INEL FMA)	1	
17	E97626043	PLAIN WASHER FLYWHEEL	1	
18	E52200434	SCREW HEX. HEAD M14X1.5X35 LH THREAD FLYWHEEL FIXING	1	
19	E40015458	R.R.UNIT	1	
20	E10G140001	STARTER MOTOR CF60	1	
21	E47177007	SCREW M8X1.25X30	2	
22	E1756507	SPRING WASHER M8	2	
23	E45762512	PLAIN WASHER	2	

24

Print Date: 07-Apr-2022

1.13

CARBURETOR, ELECTRONIC FEED PUMP & PETROL FILTER

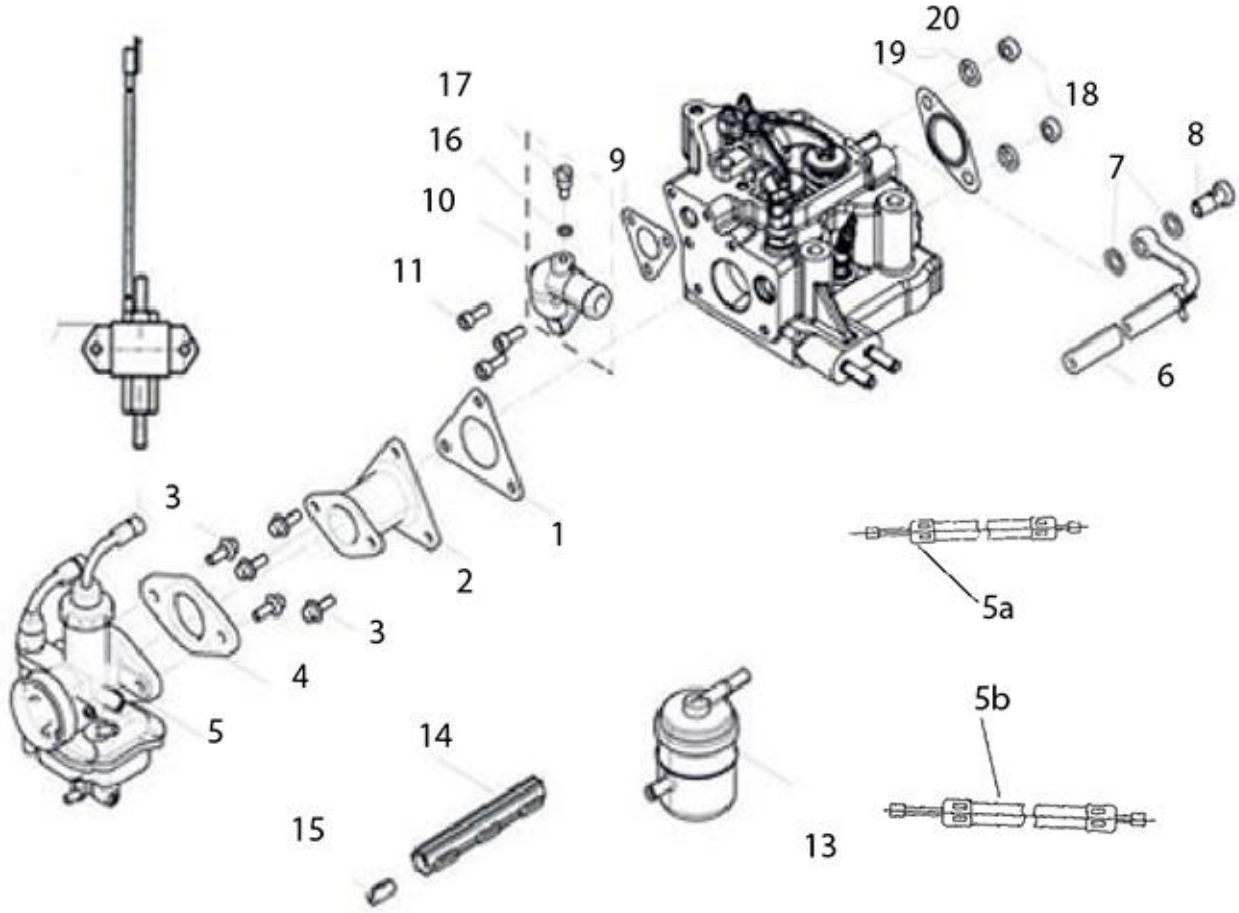
20
19
18
17
16
9
8
7
10
11
6
3
1
2
5a
3
4
5b
5
14
15
13

25

Print Date: 07-Apr-2022

1.13

CARBURETOR, ELECTRONIC FEED PUMP & PETROL FILTER

Fig. No.	Part No.	Description	Qty	Remarks
1	E40026168	JOINT INTAKE PORT	1	
2	E40010859	INTAKE MANIFOLD	1	
3	ESP650DNB011	HEX HEAD FLANGE BOLT M6X16	3	
4	E40006482	INSULATOR	1	
5	E40006842	CARBURETOR CD-26	1	
5A	E34K120006	CHOKE CABLE 501 WC MODI. 1.5MM	1	
5B	E34K120005	ACCELERATOR CABLE 501 WC MODI. 1.5MM	1	
6	E40027136	PIPE BREATHER ASSLY.	1	
7	E283467036	JOINT	2	
8	E91901030	BANJO BOLT - FEED PUMP	1	
9	E60016181	GASKET-WATER OUTLET	1	
10	E40010865	WATER OUTLET MANIFOLD ASSEMBLY	1	
11	E270973010	CAP SCREW (TUBE OIL ADAPTER)	3	
12	ED33733	GASOLINE FEED PUMP	1	
13	E40008724	PETROL FILTER	1	
14	ED23672	CABLE GUIDE	1	
15	ED43673	CABLE JUNCTION	1	
16	E260467001	JOINT	1	
17	E260908037	BLEEDING SCREW	1	
18	E50000225	NUT SS	2	
19	E43526147	JOINT-EXHAUST FLANGE	1	
20	E1756507	SPRING WASHER M8	2	
21	ED33683	INTAKE AIR REDUCER	1	NI

26

Print Date: 07-Apr-2022

1.14
IGNITION SYSTEM

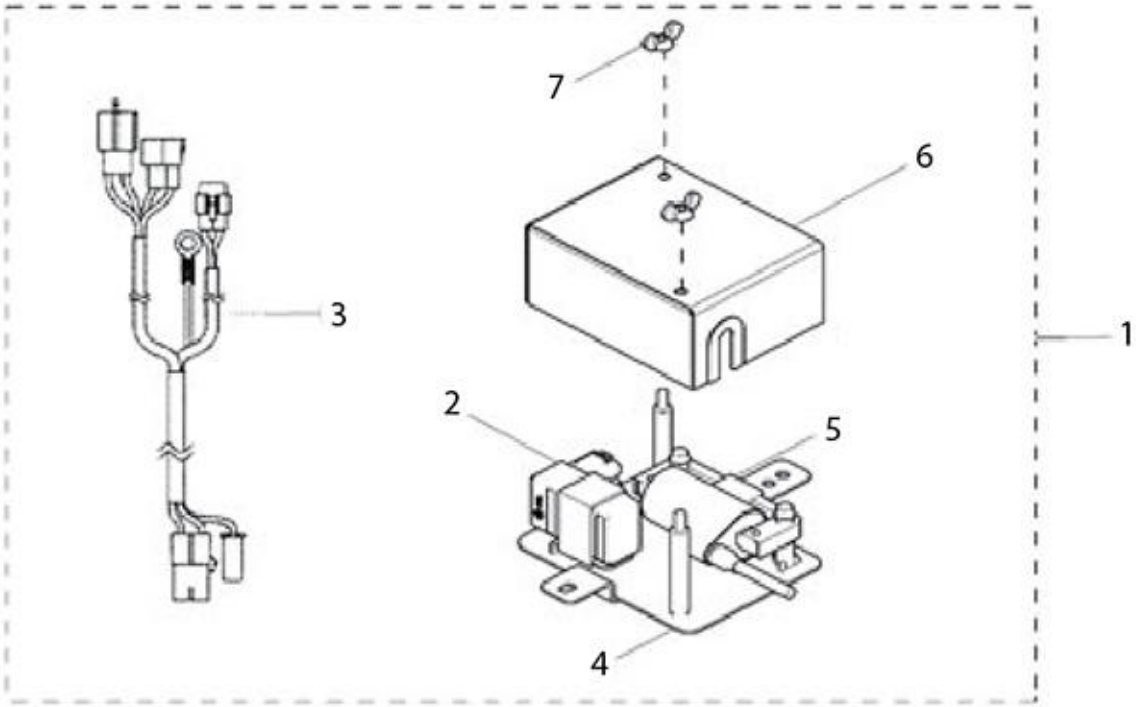
7
6
3
1
2
5
4

27

Print Date: 07-Apr-2022

1.14

IGNITION SYSTEM

Fig. No.	Part No.	Description	Qty	Remarks
1	E40015443	IGNITION SYSTEM PLATE ASSLY WITH BOUGICORD CABLE CONSISTING OF 2 TO 5	1	
2	E40005442	TCI UNIT	1	
2	E34A130001	TCI UNIT WC BSIV	1	Common,Modified Starter Protection Logic
3	E40015466	WIRING HARNESS	1	
4	E40015461	MOUNTING PLATE	1	
5	E40015465	H T COIL	1	
6	E40015460	COVER IGNITION SYSTEM	1	
7	E106320002	WING NUT M6X1	2	

28

Print Date: 07-Apr-2022

1.15

WATER PUMP & BELT TENSIONER ASSEMBLY

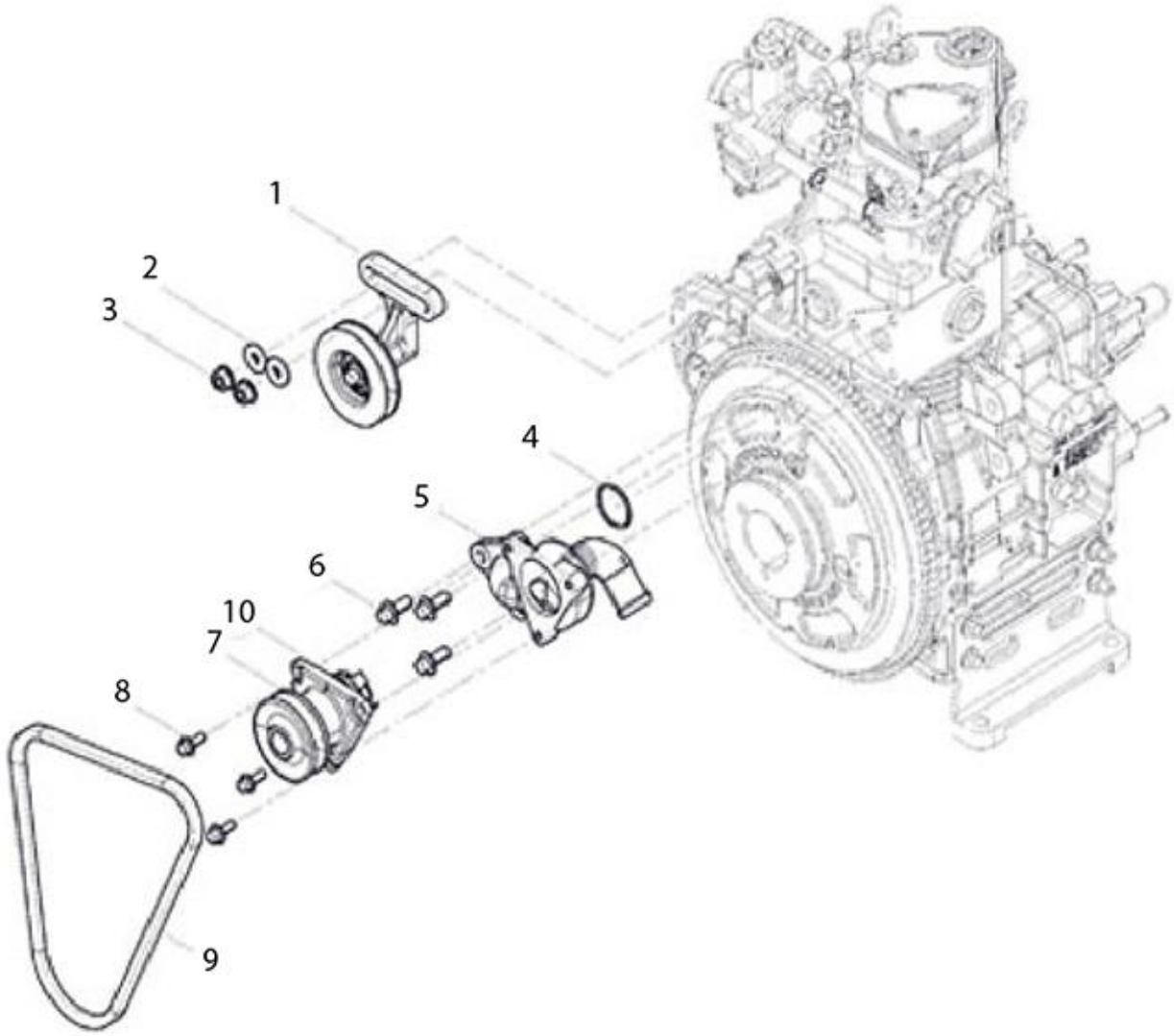
1
2
3
4
5
6
10
7
8
9

29

Print Date: 07-Apr-2022

1.15

WATER PUMP & BELT TENSIONER ASSEMBLY

Fig. No.	Part No.	Description	Qty	Remarks
1	E40005609	BELT TENSIONER ASSLY	1	
2	E40000711	WASHER BEARING	2	
3	E07502810	COLLAR NUT M8 X 1.25	2	
4	E40006217	O- RING WATER PUMP CASING	1	
5	E40010839	CASING WATER PUMP	1	
6	E50002805	COLLER BOLT M8 X 1.25 X 22	9	
7	E4005616	WATER PUMP ASSLY (COSMIC PORT).	1	
8	ESP650DNB011	HEX HEAD FLANGE BOLT M6X16	3	
9	E40006431	BELT	1	
10	E40006221	O-RING WATER PUMP	1	

30

Print Date: 07-Apr-2022

1.16
MUFFLER AND GASKET ASSEMBLY

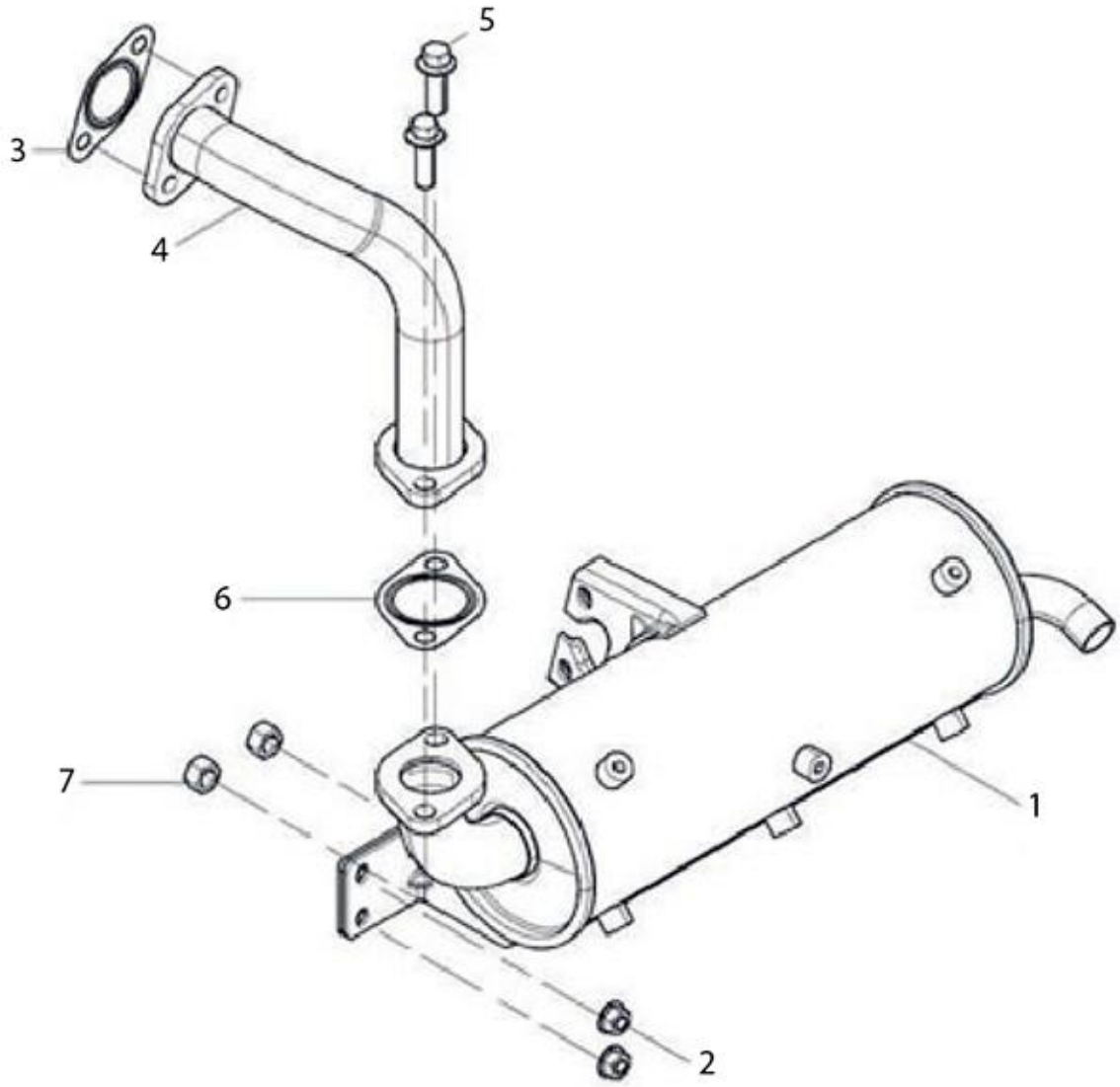
5
3
4
6
7
1
2

31

Print Date: 07-Apr-2022

1.16

MUFFLER AND GASKET ASSEMBLY

Fig. No.	Part No.	Description	Qty	Remarks
1	E40027779	MUFFLER ASSEMBLY	1	
2	E07502810	COLLAR NUT M8 X 1.25	2	
3	E43526147	JOINT-EXHAUST FLANGE	1	
4	E34G070003	EXHAUST PIPE ASSY FROM CYLINDER HEAD TO MUFFLER	1	
5	E43502821	HEX HEAD FLANGE BOLT M10X1.5X30	2	
6	E87026113	GASKET EXHAUST	1	
7	E07502810	COLLAR NUT M8 X 1.25	2	

32

Print Date: 07-Apr-2022

1.17
AIR FILTER ASSEMBLY

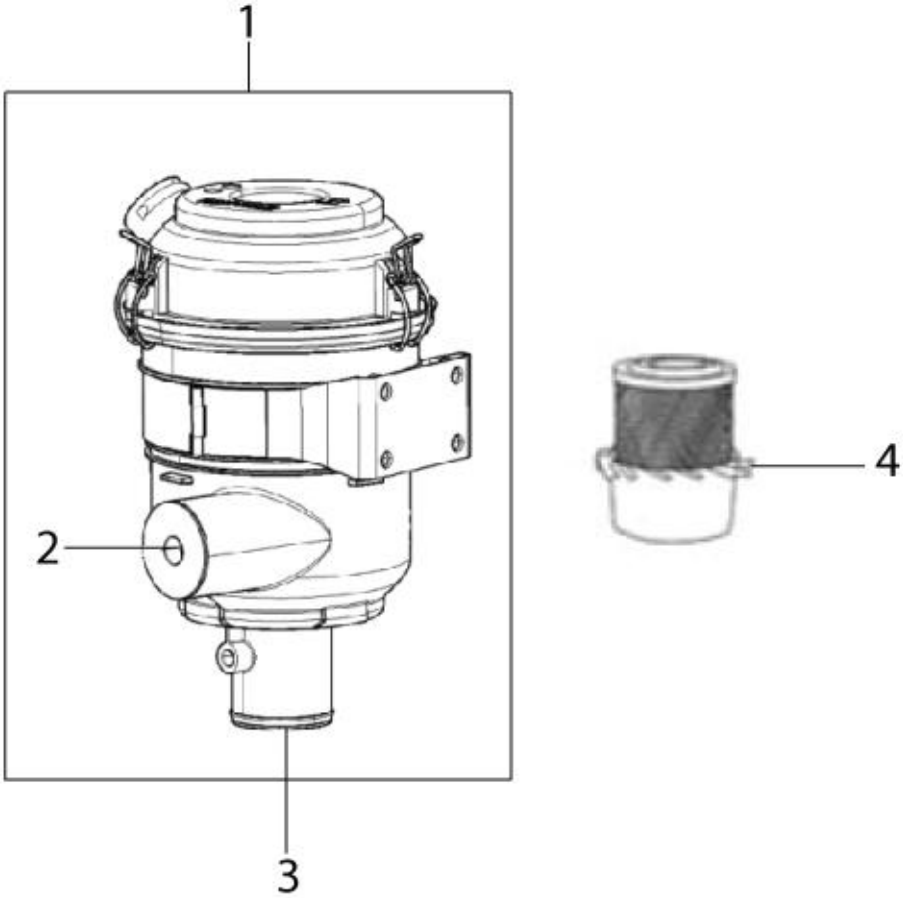
1
2
3
4

33

Print Date: 07-Apr-2022

1.17

AIR FILTER ASSEMBLY

Fig. No.	Part No.	Description	Qty	Remarks
1	E34A140002	AIR FILTER ASSEMBLY _ WC_ PASS	1	Passenger
1	E34A140001	AIR FILTER ASSEMBLY	1	Cargo
2	E34M140001	RESTRICTOR INLET: ID 16	1	common
3	E34M140002	RESTRICTOR OUTLET	1	Passenger
3	E34M140003	RESTRICTOR OUTLET: ID 20	1	Cargo
4	E60008721	ELEMENT FOR AIR FILTER	1	common
5	E07518638	FILTER COVER	1	NI
6	E07518642	WIRE CLAMP	3	NI
7	E07518639	BUTTERFLY VALVE	1	NI
8	E07518641	FLAT SEAL RING	1	NI

34

Print Date: 07-Apr-2022

1.18

PETROL TANK & PIPES

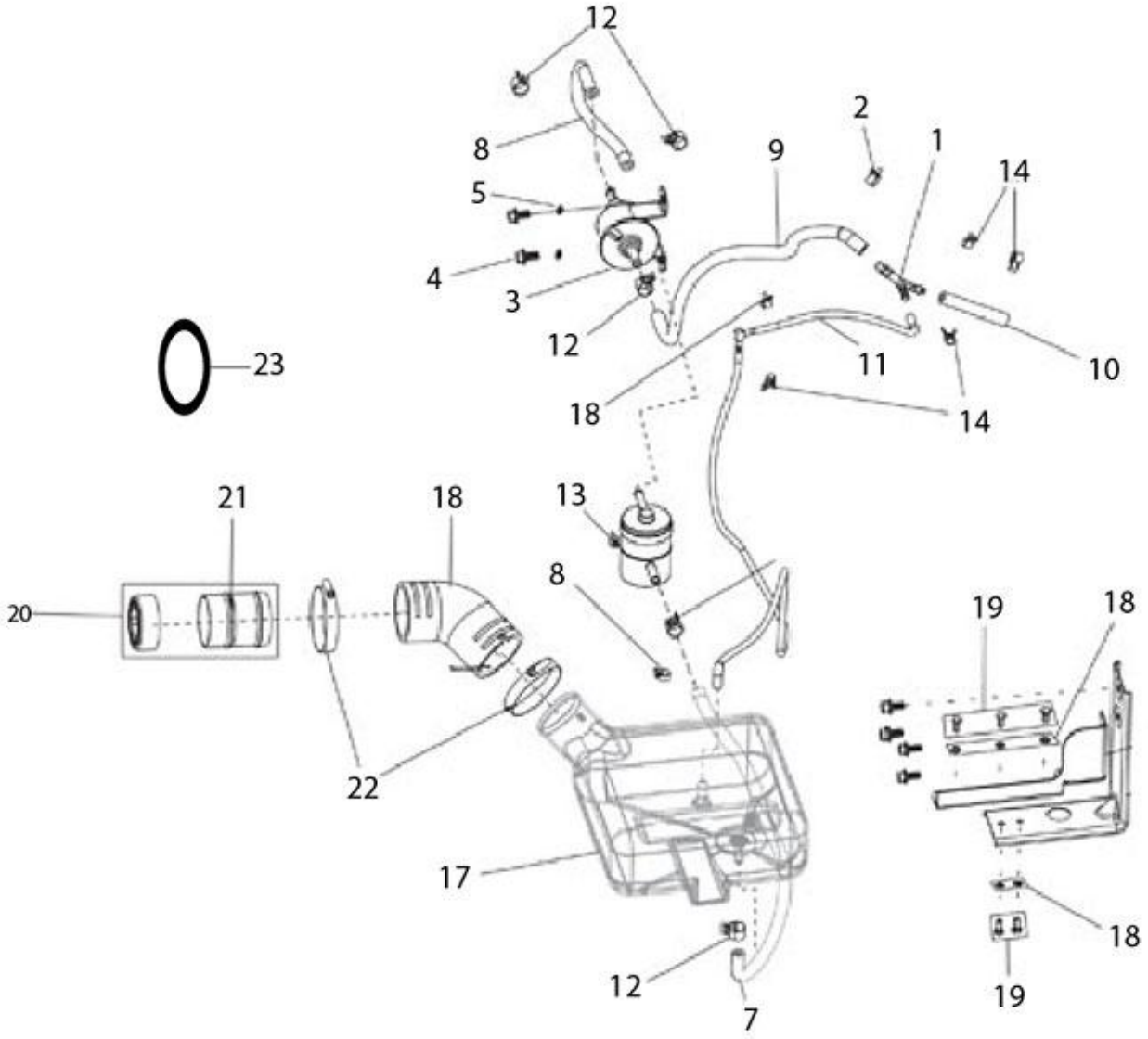
12
8
2
9
1
14
5
4
3
12
11
10
23
18
14
21
18
13
8
20
19
18
22
17
18
12
7
19

35

Print Date: 07-Apr-2022

1.18

PETROL TANK & PIPES

Fig. No.	Part No.	Description	Qty	Remarks
1	644824	THREE WAY 'Y' CONNECTOR - CNG/LPG	1	
2	662571	HOSE CLAMP	1	
3	B002630	ELECTRICAL FEED PUMP LGA 280 PETROL ENGI	1	Old Type
3	6D001087	PIGTAIL, FUEL FEED PUMP(PRICOL)	1	New Type-Can be Interchangeable with Old Type
3	6A001657	ASSY ELE. FUEL PUMP (PRICOL)	1	New Type-Can be Interchangeable with Old Type
4	31088	HEX HD SCREW M6 X 16 CL 8.8 (811061623)	2	
5	016406	SPRING WASHER	2	
6	B041852	SPRING BAND HOSE CLIP (DIA. 9.4)	1	
7	B077322	FUEL PIPE FUEL TANK TO FUEL FILTER	1	
8	B077324	FUEL PIPE FILTER TO FEED	1	
9	B077325	FUEL PIPE FEED PUMP TO Y-CONNECTOR	1	
10	NS	NOT SERVICEABLE	1	discontinue
11	B077325	FUEL PIPE FEED PUMP TO Y-CONNECTOR	1	Modi.
12	632109	HOSE CLAMP BRAKE PIPE	5	
13	660168	PAN SELF TP. SCREW 10 SGX13AB	1	
14	B003282	HOSE CLIP (DIA.7) (PETROL & CNG/LPG)	3	
15	NS	NOT SERVICEABLE	1	NI
16	16405	SPRING WASHER M5	1	
17	B077271	S/A PLATIC FUEL TANK (3L)	1	
18	B077277	HOSE PLASTIC FUEL TANK	5	
19	31056	HEX HEAD SCREW M5 X 12 CL. 8.8	5	
20	B003115	TUBE FUEL TANK FILLER ASSY	1	
21	NS	NOT SERVICEABLE	1	Service on assly
22	B041853	HOSE CLIP (SIZE : 65A)	2	
23	6A000233	GROMMET FOR FILLER NECK	1	

36

Print Date: 07-Apr-2022

1.19

RADIATOR & COOLING SYSTEMS

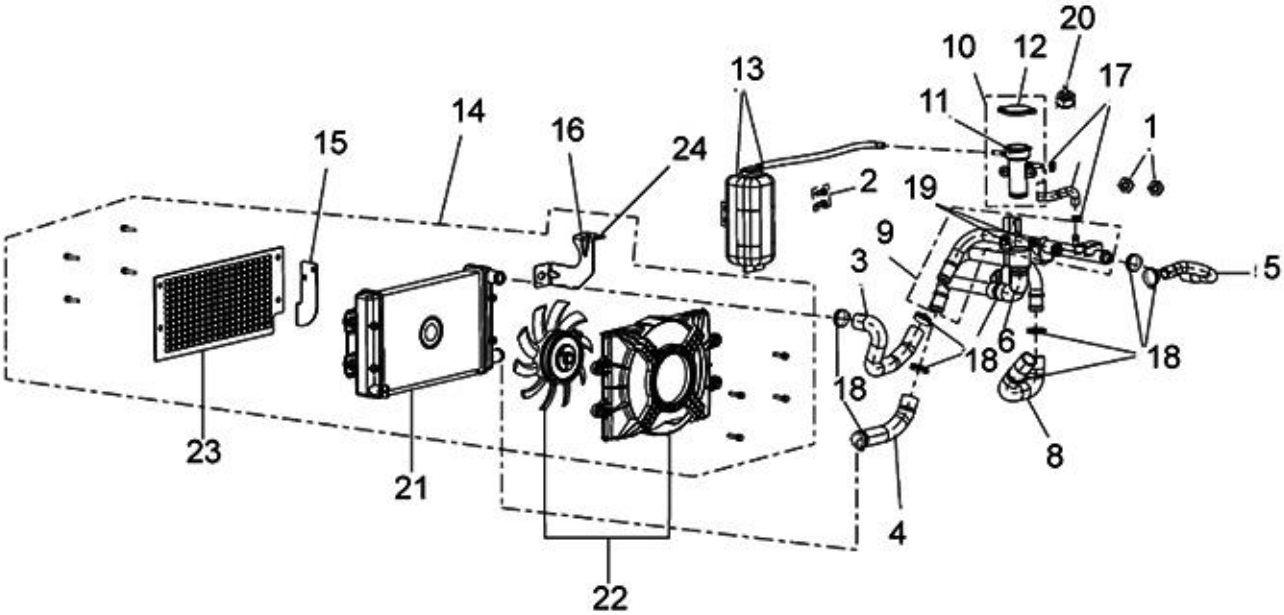
20
10
12
13
17
11
14
16
1
15
24
2
19
9
3
5
6
18
18
18
8
23
21
4
22

37

Print Date: 07-Apr-2022

1.19

RADIATOR & COOLING SYSTEMS

Fig. No.	Part No.	Description	Qty	Remarks
1	20106	HEX NUT M6	4	
2	645034	HEX HEAD SCREW M8 X 20 CL 8.8 W/SP, PL W	2	
3	B077239	HOSE RADIATOR INLET	1	
4	B077240	RADIATOR OUTLET HOSE	1	
5	B077246	ENGINE OUTLET HOSE	1	
6	B077247	HOSE (FILLER NECK TO RADIATOR INLET)	1	
7	B077248	DE-AERATION HOSE	1	
8	B077257	RADIATOR INLET HOSE	1	
9	B077287	ASSY. RADIATOR PIPE IN/OUTLET	1	
10	B006559	REMOTE FILLER NECK ASSY	1	
11	B006560	REMOTE FILLER NECK	1	
12	B006561	PRESSURE CAP	1	
13	B006562	COOLANT RECOVERY TANK ASSY	1	
14	KIT96044R	KIT_ENGINE COOLING SYSTEM_WATER COOLED	1	
17	632667	HOSE CLIP SIZE DIA 16 (OVER FLOW)	2	
18	662465	HOSE CLAMP	9	
19	D9166140616	BOLT, W/WASHER	5	
20	B078338	TEMP.SWITCH (90- 84) _ 501 WC	1	
15	6A000825	RAD. MOUNTING RH BRACKET ASSLY.	1	
16	6A000826	RAD. MOUNTING LH BRACKET ASSLY.	1	
21	6A000822	CORE WITH TANK ASSLY	1	
22	6A000823	FAN MOTOR WITH SHROUD ASSLY	1	
23	6A000824	RADIATOR GUARD	1	
24	6A000827	SELF TAPPING SCREW	4	

38

Print Date: 07-Apr-2022

1.20

ENGINE SIDE COVER AND MAIN HOUSING

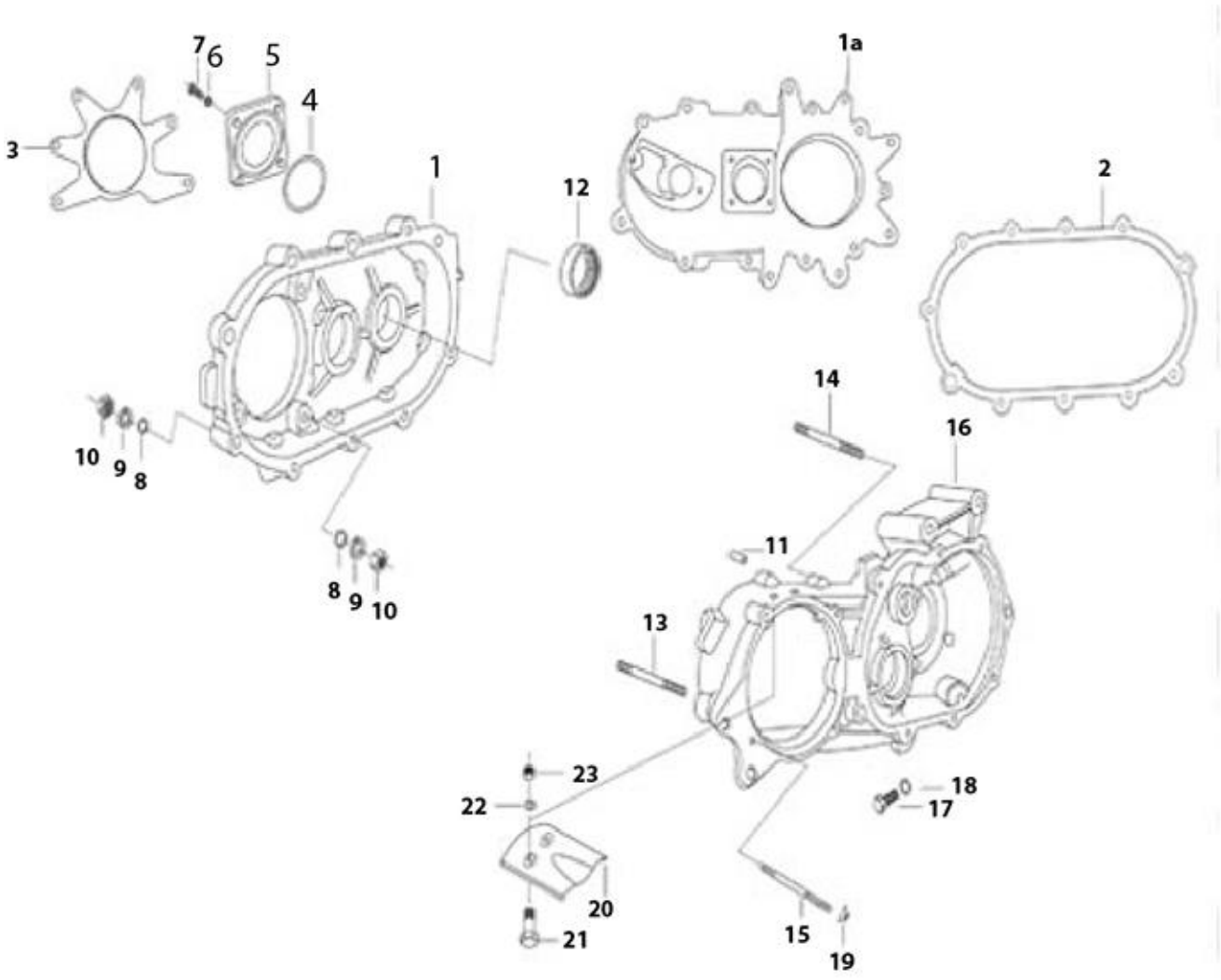
7
6
5
4
3
1
12
1a
2
14
16
10
9
8
8
9
10
11
13
23
22
18
17
20
21
15
19

39

Print Date: 07-Apr-2022

1.20

ENGINE SIDE COVER AND MAIN HOUSING

Fig. No.	Part No.	Description	Qty	Remarks
1	1F0007564	ENGINE COVER SIDE (EXT. MTG)	1	
2	BS4 1A010093	GEAR BOX COVER_BS4	1	
3	B001844	GASKET ENGINE SIDE COVER	1	
4	825420215	O RING - COVER PLATE	1	
5	520221019R	COVER PLATE (E/SIDE COVER)	1	
6	1A016964	CSK PHILIPS HEAD SCREW	4	
7	B016611	FLANGED HEX. HEAD SCREW M6X45 CL10	4	
8	3056	PLAIN WASHER M6 OD12	11	
9	016406	SPRING WASHER	11	
10	15335	HEX HD NUT M8	11	
11	127102010	HOLLOW DOWEL (G. BOX ESC)	2	
12	120212012	NEEDLE BUSH	1	
13	B042798	FLANGED HEXAGONAL HEAD SCREW M8X45	8	
14	B042799	FLANGED HEXAGONAL HEAD SCREW M8X40	9	
15	B016611	FLANGED HEX. HEAD SCREW M6X45 CL10	4	
16	1A010094	MAIN HOUSING	1	Old
16	1A016604	MAIN HOUSING	1	New aluminiun clutch
17	811081025	HEX HEAD SCREW M8 X 10 (DRAIN PLUG)	1	
18	485703	WASHER	1	
19	659842	NUT WITH CONICAL WASHER M8 X 1.25P	6	
20	127911019	OIL DEFLECTOR CLUTCH	1	
21	567741	HEX HEAD SCREW M5 X 18 (811051824)	2	
22	127912013	FIBER WASHER OIL DEFLECTOR	2	
23	12136	NUT / NYLOCK NUT M5	2	
24	B076881	GB EXT.MTG. (W/O CLUTCH ASSY) PICK UP	1	Cargo
24	6A000115	GB EXT.MTG.(W/O CLUTCH ASSLY) PASSENGER	1	Pass

40

Print Date: 07-Apr-2022

1.21

MAINSHAFT, SPEED GEARS AND CLUSTER GEAR

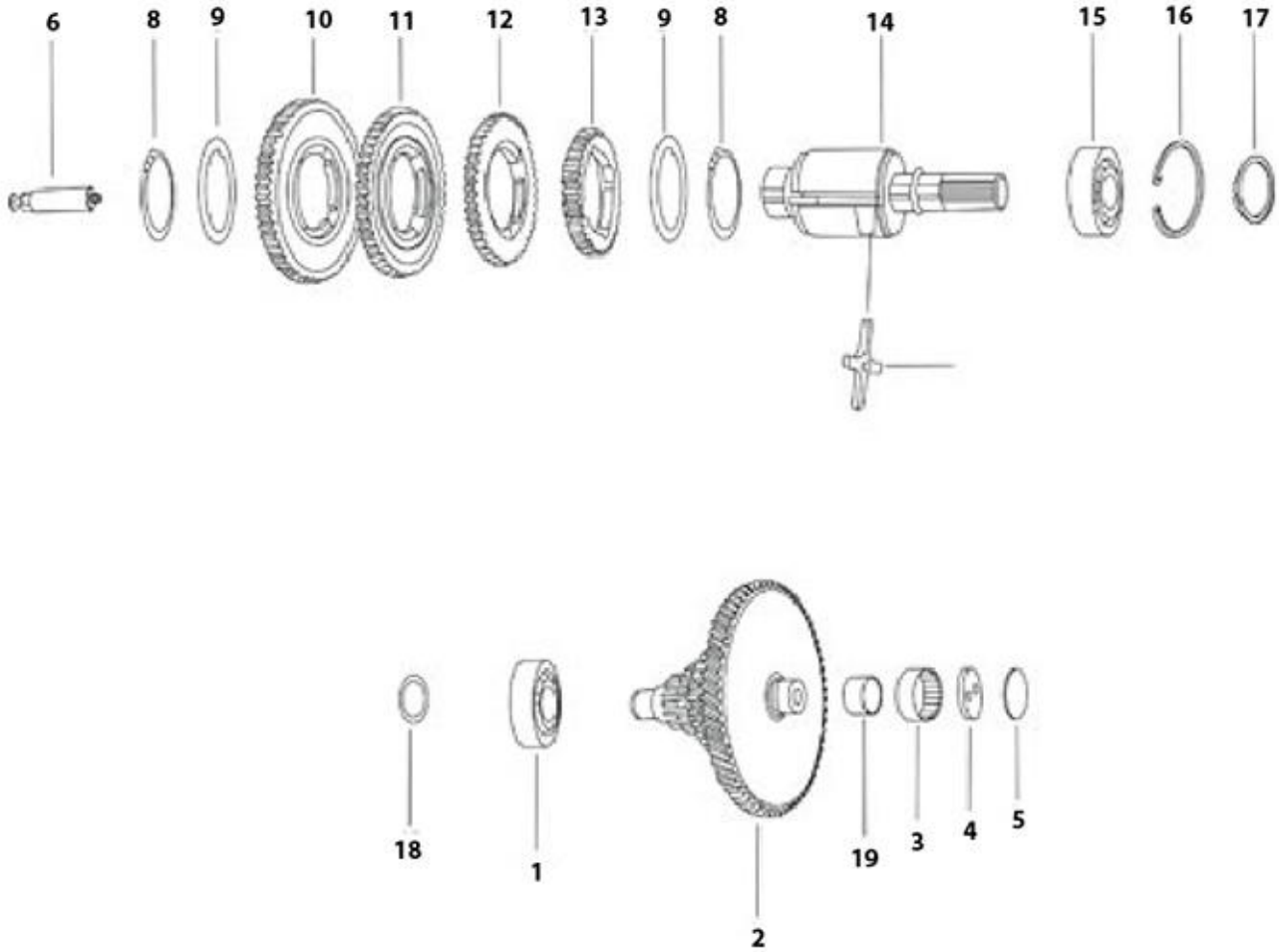
6
8
9
10
11
12
13
9
8
14
15
16
17
18
1
2
19
3
4
5

41

Print Date: 07-Apr-2022

1.21

MAINSHAFT, SPEED GEARS AND CLUSTER GEAR

Fig. No.	Part No.	Description	Qty	Remarks
1	1A011980R	BALL BEARING	1	
2	127203010R	CLUSTER GEAR	1	Pass
2	1A010698R	CLUSTER GEAR	1	Cargo
3	884222808	NEEDLE BUSH 22X28X12	1	
4	120204015R	WASHER (ALT)	1	
5	120205019	SHIM HARD BUSH	1	
6	523021018	STEM GEAR OPERATING	1	
7	B003924	CROSS	1	
8	842004808	CIRCLIP DIA.48 (EXT)	2	
9	523011013R	SHOULDER RING	2	
10	127309515R	SPEED GEAR 1ST	1	pass
10	1A009578R	SPEED GEAR 1ST	1	cargo
11	127302517R	SPEED GEAR 2ND	1	Pass
11	1A010700R	SECOND SPEED GEAR (VE}	1	Cargo
12	127303016R	SPEED GEAR 3RD	1	
13	127306513R	SPEED GEAR 4TH	1	
14	127451019R	MAIN SHAFT	1	
15	880255211R	DEEP GROOVE BALL BEARING 25X52X15	1	
16	841005207	CIRCLIP DIA 52 (INT)	1	
17	842002501	CIRCLIP DIA 25 (EXT)	1	
18	842001507	CIRCLIP DIA 15 (EXT)	1	
19	122032014	INNER RING - CLUSTER GEAR	1	

42

Print Date: 07-Apr-2022

1.22

GEAR SHIFTER AND ITS CONTROL MECHANISM

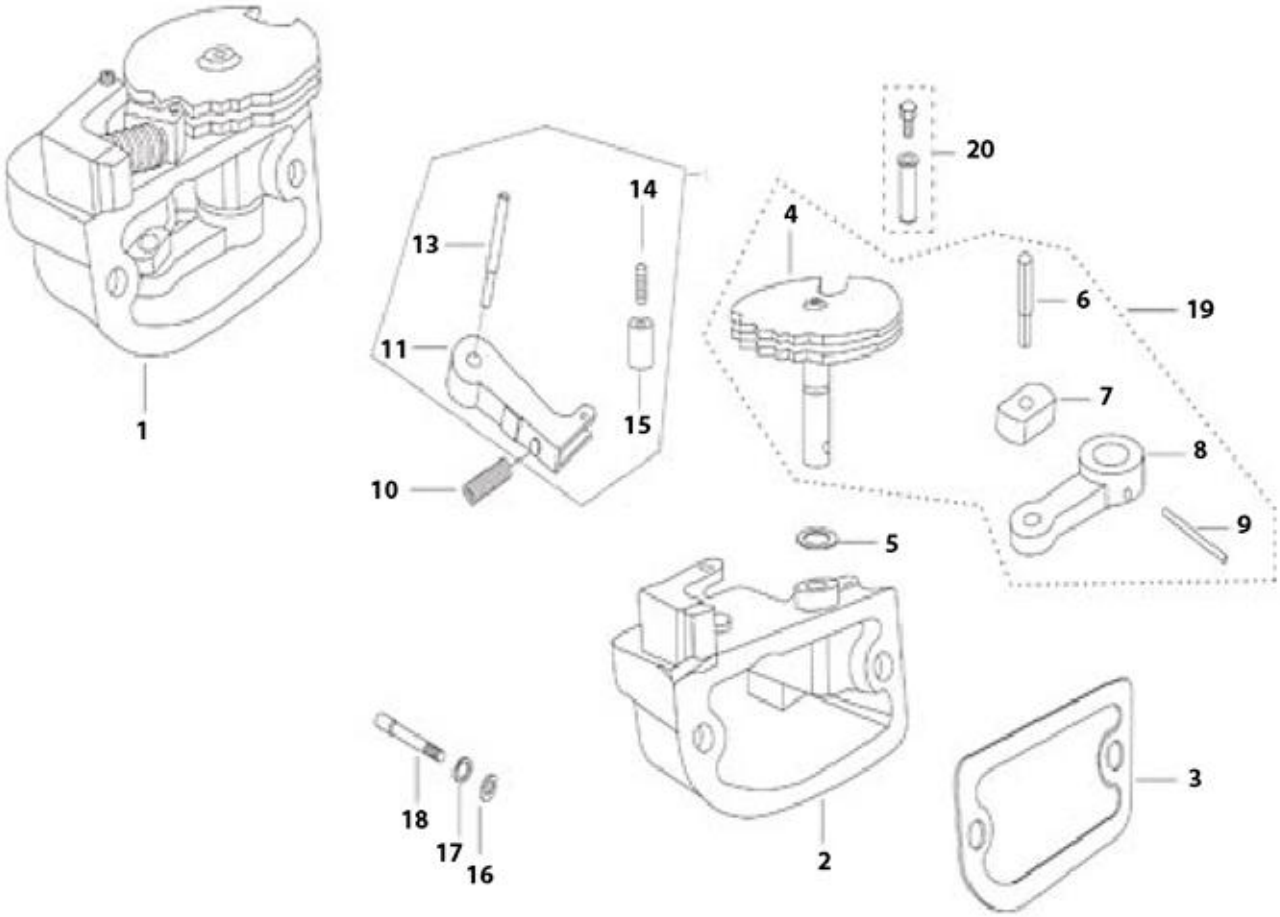
1
2
3
4
5
6
7
8
9
10
11
13
14
15
16
17
18
19
20

43

Print Date: 07-Apr-2022

1.22

GEAR SHIFTER AND ITS CONTROL MECHANISM

Fig. No.	Part No.	Description	Qty	Remarks
1	127640012	COMPLETE GEAR SHIFTER HSG ASSLY	1	CONSISTING OF SR. NO.2,4 TO 10 & 12
2	127641016	GEAR SHIFTER HOUSING	1	
3	128081017	GASKET HOUSING GEAR SHIFTER HOUSING	1	
4	SPB042620	SECTOR AND CONNECTOR PLATE AND LEVER ASSLY.	1	
5	825080209	O - RING - (SECTOR PLATE ASSY.)	1	
6	126022017	PIN FOR SLIDER BLOCK	1	
7	126021013	SLIDER BLOCK	1	
8	SPB042620	SECTOR AND CONNECTOR PLATE AND LEVER ASSLY.	1	
9	17702	SPRING PIN	1	
10	126003011	SPRING GEAR SHIFTER ASSY.	1	
11	126060019	BRACKET ASSY.	1	
12	SP126050014	BKT. WITH ROLLER ASSLY - SPD	1	
13	126054010	SCREW FOR BRACKET	1	
14	126053016	PIN FOR ROLLER	1	
15	126052012	ROLLER	1	
16	3056	PLAIN WASHER M6 OD12	2	
17	016406	SPRING WASHER	2	
18	B016611	FLANGED HEX. HEAD SCREW M6X45 CL10	2	
19	SPB042620	SECTOR AND CONNECTOR PLATE AND LEVER ASSLY.	1	
20	604560	SCREW TERMINAL ASSY. - GEAR CONTROL	2	

44

Print Date: 07-Apr-2022

1.23

DIFFERENTIAL UNIT, FARE METER HOUSING AND SPEEDO DRIVE

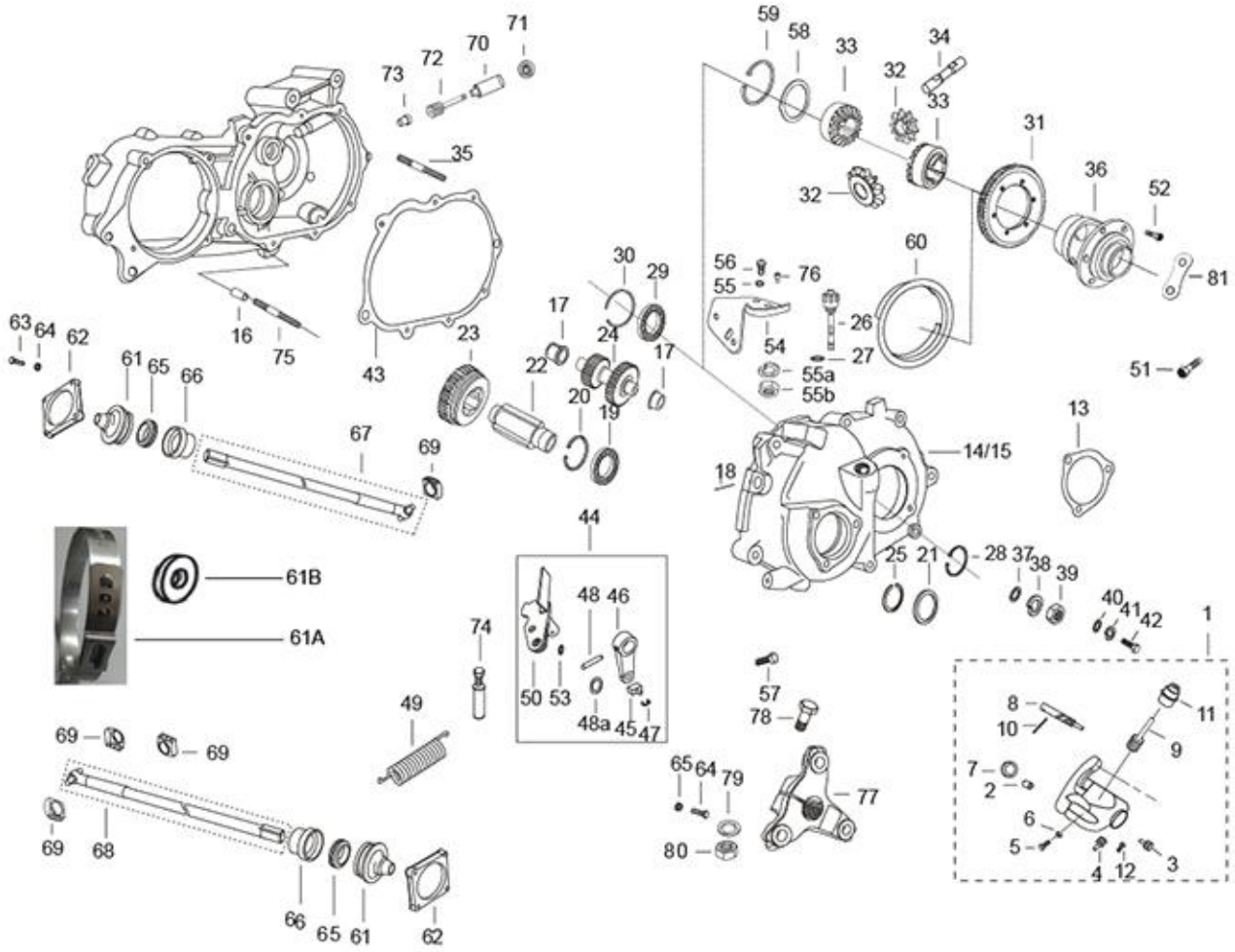
59
58
33
34
32
33
31
36
52
81
71
70
72
73
35
32
60
56
55
76
26
27
54
55a
55b
51
30
29
17
24
17
22
20
19
23
43
16
75
63
64
62
61
65
66
67
69
13
14/15
18
44
61B
61A
48
46
50
53
48a
45
47
74
49
25
21
28
37
38
39
40
41
42
1
57
78
8
10
11
9
7
2
6
5
4
12
3
65
64
79
77
80
69
69
69
68
66
65
61
62

45

Print Date: 07-Apr-2022

1.23

DIFFERENTIAL UNIT, FARE METER HOUSING AND SPEEDO DRIVE

Fig. No.	Part No.	Description	Qty	Remarks
1	1A000817	FAREMETER	1	Pass
2	124112014	BUSH(10951)	1	Pass
3	125012015	PLUG F.M.HOUSING (40734)	1	Pass
4	165121014	PIN	1	
5	811051525	SCREW (HEX HEAD M5 X 15)	1	
6	20105	PLAIN NUT M5	1	Pass
7	B018991	PLUG FOR FAREMETER	1	
8	124121015	FARE METER PINION	1	Pass
9	124102019	FARE METER GEAR	1	Pass
10	822031942	SPRING PIN 3 X 19	1	Pass
11	124141015R	ADOPTER NYLON (VE)	1	Pass
12	124113018	GREASE NIPPLE (M6)	1	Pass
13	1A000826	GASKET	1	
11	BS4 1A010093	GEAR BOX COVER_BS4	1	
15	31154	HEX HDD SCREW M10X22 CL 8.8	3	
16	120203011	HOLLOW DOWEL - GEAR BOX COVER	2	
17	B042486	BUSH	2	
18	822051647	SPRING PIN 5X16	1	
19	880305509R	DEEP GROOVE BALL BEARING 30X55X13	1	
20	841005207	CIRCLIP DIA 52 (INT)	1	
20	841005506	CIRCLIP DIA. 55 (INT)	1	
21	117402	OIL SEAL	1	
21	1A000236	OIL SEAL	1	
22	1A009926	REVERSE SHAFT	1	
23	127404016R	GEAR R.C.	1	pass
23	227403011R	R.C. GEAR (CARGO)	1	cargo
24	127571015R	IDLER GEAR (PAS)	1	pass
24	227571014R	IDLER GEAR (CARGO)	1	cargo
25	842002501	CIRCLIP DIA 25 (EXT)	1	
25	842003000	CIRCLIP DIA. 30 (EXT.)	1	
26	112898	OIL LEVEL ARM WITH PLUG	1	Old
26	1A014592	OIL DIPSTICK	1	New aluminiun clutch
27	127016015	DIPSTICK SEALING WASHER	1	
28	6450	EXT CIRCLIP DIA 48	1	
29	7066R	RADIAL BALL BEARING	1	

46

Print Date: 07-Apr-2022

1.23

DIFFERENTIAL UNIT, FARE METER HOUSING AND SPEEDO DRIVE

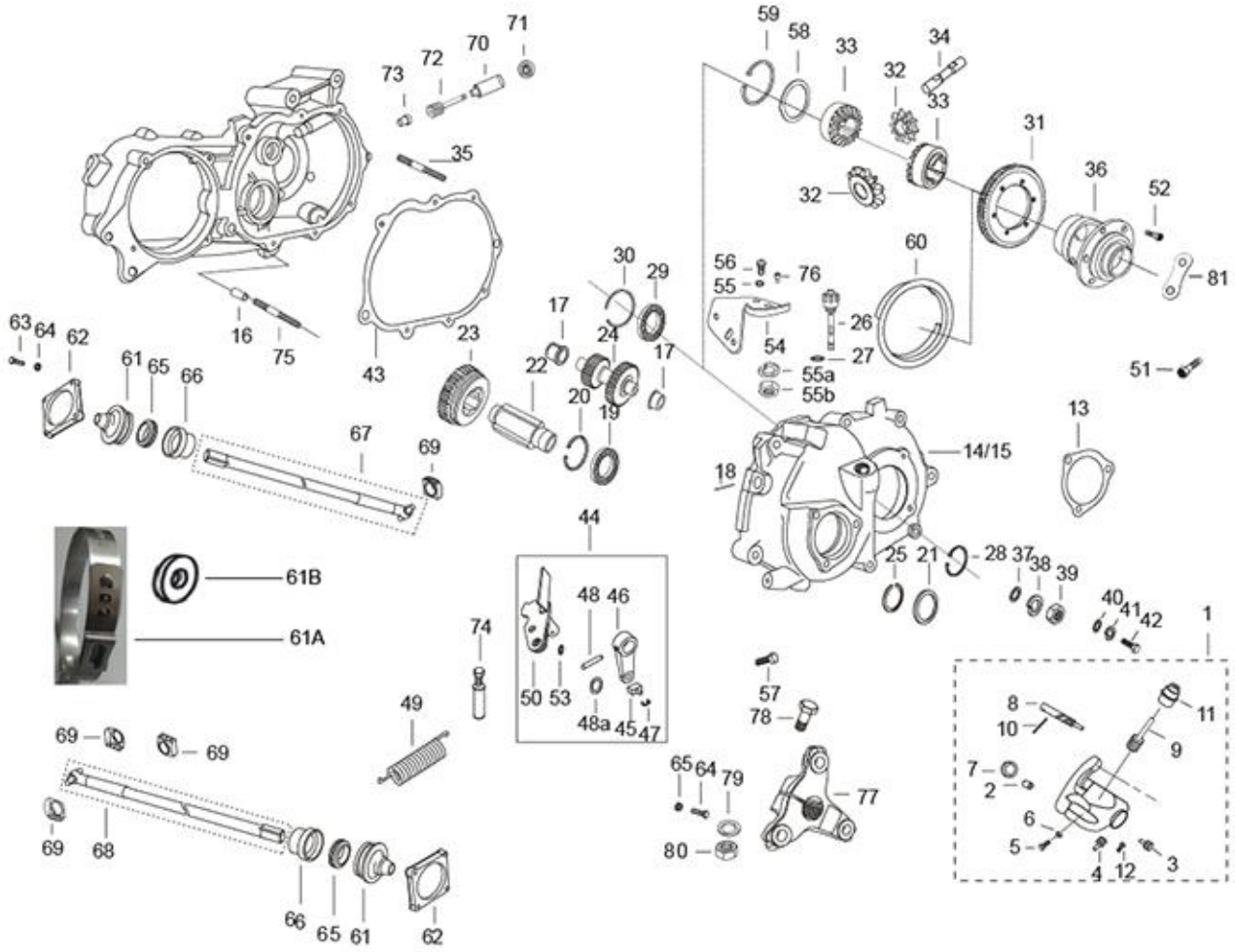
59
58
33
34
32
33
31
36
52
81
71
70
72
73
35
32
60
56
55
76
26
27
54
55a
55b
51
30
29
17
24
17
22
20
19
23
43
16
75
63
64
62
61
65
66
67
69
13
14/15
18
44
61B
61A
48
46
50
53
48a
45
47
74
49
69
69
69
68
66
65
61
62
25
21
28
37
38
39
40
41
42
1
57
78
8
10
11
9
7
2
6
5
4
12
3
65
64
79
77
80

47

Print Date: 07-Apr-2022

1.23

DIFFERENTIAL UNIT, FARE METER HOUSING AND SPEEDO DRIVE

Fig. No.	Part No.	Description	Qty	Remarks
30	111353	CIRCLIP	1	
30A	016406	SPRING WASHER	1	
31	127555016	GEAR FINAL DRIVE (PASS)	1	pass
31	1A011810	DIFFERENTIAL CROWN (PASS.)	1	Applicable 15th Mar-19 onwards
31	227555010	GEAR F.D.(CARGO)	1	cargo
31	1A014033	DIFFERENTIAL CROWN CARGO BSIV	1	Applicable 15th Mar-19 onwards
32	NS-	NOT SERVICEABLE PART	2	Serviceable as Kit - 940028
33	NS-	NOT SERVICEABLE PART	2	Serviceable as Kit - 940028
34	132129	PIN	1	
35	B042798	FLANGED HEXAGONAL HEAD SCREW M8X45	8	
36	288730	DIFFERENTIAL CAGE	1	
37	808000826	PLAIN WASHER M8	8	
38	016408	SPRING WASHER	8	
39	20108	HEX NUT M8	8	
39	15335	HEX HD NUT M8	10	
39	20108	HEX NUT M8	8	
40	3056	PLAIN WASHER M6 OD12	3	
41	016406	SPRING WASHER	3	
42	31088	HEX HD SCREW M6 X 16 CL 8.8 (811061623)	3	
43	127141016	GASKET G. B. COVER	1	
44	SP1A0101404	INVERTER LEVER SECTOR ASSY PASS -SPD	1	pass
44	SP1A011609	INVERTER LEVER SECTOR ASSY CARGO -SPD	1	cargo
45	120321019	SLIDER BLOCK R.C. GEAR	1	
46	SP1A0101404	INVERTER LEVER SECTOR ASSY PASS -SPD	1	pass
46	120322013	LEVER (R C GEAR) (41929)	1	Not Serviceable
47	843000500	CIRCLIP DIA.5 (EXT) TYPE C	1	
48	17702	SPRING PIN	1	
48A	1A005176	O- RING	1	
49	127111011	REVERSE GEAR SPRING	1	
50	1A010139	SECTOR PLATE ASSLY COMP	1	For Old Gear Box Cover
51	520221019R	COVER PLATE (E/SIDE COVER)	1	
52	1A004807	SCREW	6	
53	825080209	O - RING - (SECTOR PLATE ASSY.)	1	
54	128306015	STOPPER PLATE R.C. LEVER	1	
55	568721	SPRING WASHER M4	2	

48

Print Date: 07-Apr-2022

1.23

DIFFERENTIAL UNIT, FARE METER HOUSING AND SPEEDO DRIVE

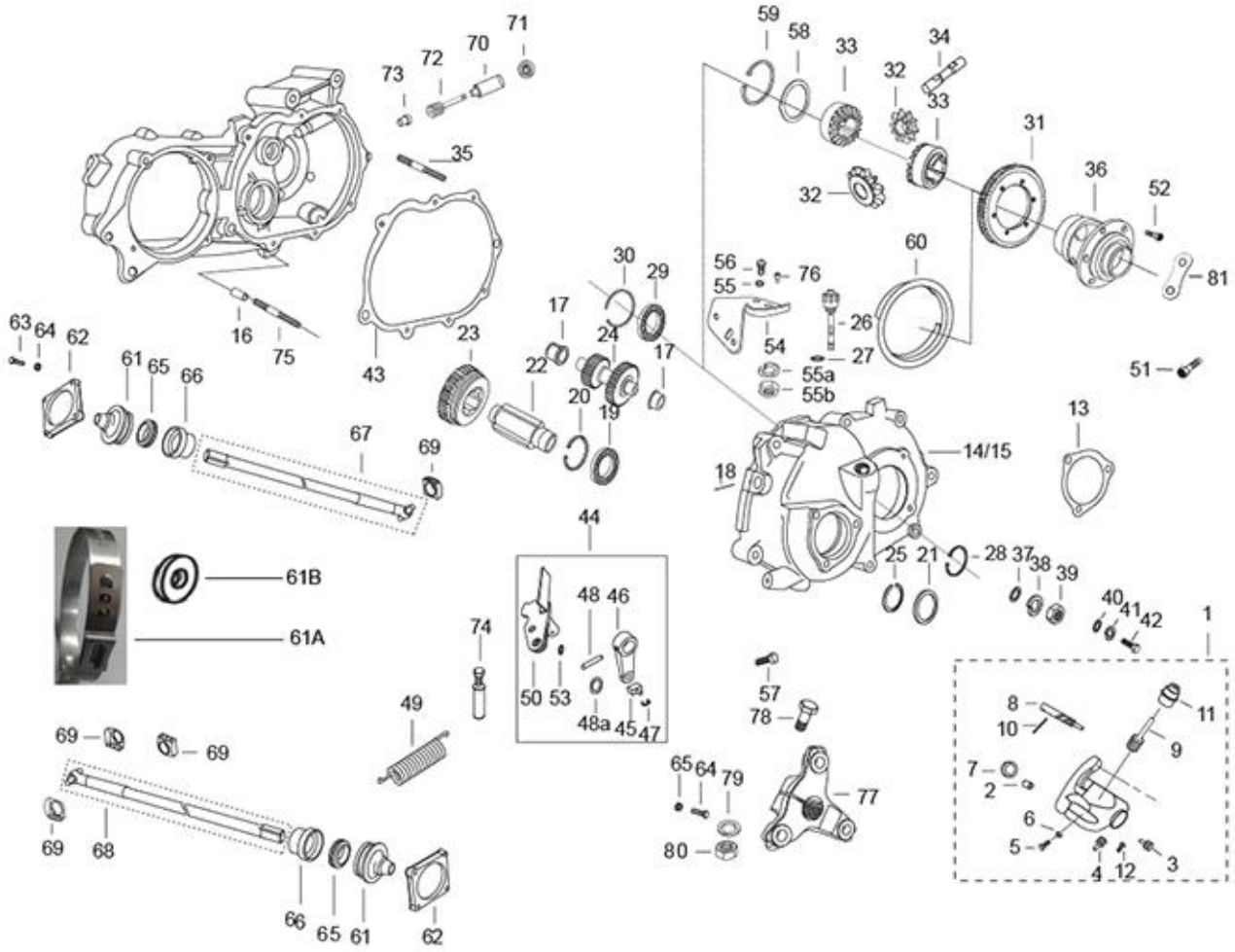
59
58
33
34
32
33
31
36
52
81
71
70
72
73
35
32
60
56
55
76
26
27
54
55a
55b
30
29
17
24
17
22
20
19
23
43
16
75
63
64
62
61
65
66
67
69
51
13
14/15
18
44
61B
61A
48
46
50
53
48a
45
47
74
49
25
21
28
37
38
39
40
41
42
1
57
78
8
10
11
9
7
2
6
5
4
12
3
65
64
79
77
80
69
69
69
68
66
65
61
62

49

Print Date: 07-Apr-2022

1.23

DIFFERENTIAL UNIT, FARE METER HOUSING AND SPEEDO DRIVE

Fig. No.	Part No.	Description	Qty	Remarks
55A	003054	PLAIN WASHER	2	
55B	20104	HEX NUT M4	2	
56	31088	HEX HD SCREW M6 X 16 CL 8.8 (811061623)	2	
57	128307019	BOLT R.C. SPRING RETAINING	1	
58	220575	WASHER 65X3	1	
59	132134	CIRCLIP	1	
60	132244	STOPPER THK=1.0	1	
60	1A011778	SATELLITE PIN RETAINER	1	Applicable 15th Mar-19 onwards
60A	1A000612	RETAINER SCREW - PRE COATED	2	Applicable 15th Mar-19 onwards
61	6C000016	BELLOW	2	Chassis cut off MBX0003BFXE848267
61A	6C000041	OTIKAR CLAMP FOR BELLOW	2	Chassis cut off MBX0003BFXE848267
61B	3056	PLAIN WASHER M6 OD12	6	Chassis cut off MBX0003BFXE848267
62	111356	COVER	2	
63	31092	HEX. HD SCREW M6X25	8	
64	016406	SPRING WASHER	8	
65	6C000312R	SEAL RING	2	Chassis cut off MBX0003BFXE848267
66	113278	BRACKET RETAINER RING (41736)	2	
67	587687	PROP. SHAFT SUB ASSY. LT (WITH PIN)	1	
68	587685	PROP. SHAFT SUB ASSY. RT (WITH PIN)	1	
69	112867R	SLIDER BLOCK PROP. SHAFT	4	
70	117401	BUSH	1	
71	117402	OIL SEAL	1	
72	117404	SPEEDOMETER GEAR	1	
73	165121014	PIN	1	
74	604560	SCREW TERMINAL ASSY. - GEAR CONTROL	1	
75	B042799	FLANGED HEXAGONAL HEAD SCREW M8X40	2	
76	119278	TERMINAL	1	
77	111498	ELASTIC HUB	1	
78	B024614	HEX HEAD BOLT M10X45 CL 10.9	2	
79	16410	SPRING WASHER	2	
80	231370	SELF BREAKING NUT M10	2	
81	B003208	LOCK PLATE	3	

50

Print Date: 07-Apr-2022

1.24

CLUTCH AND CLUTCH COVER

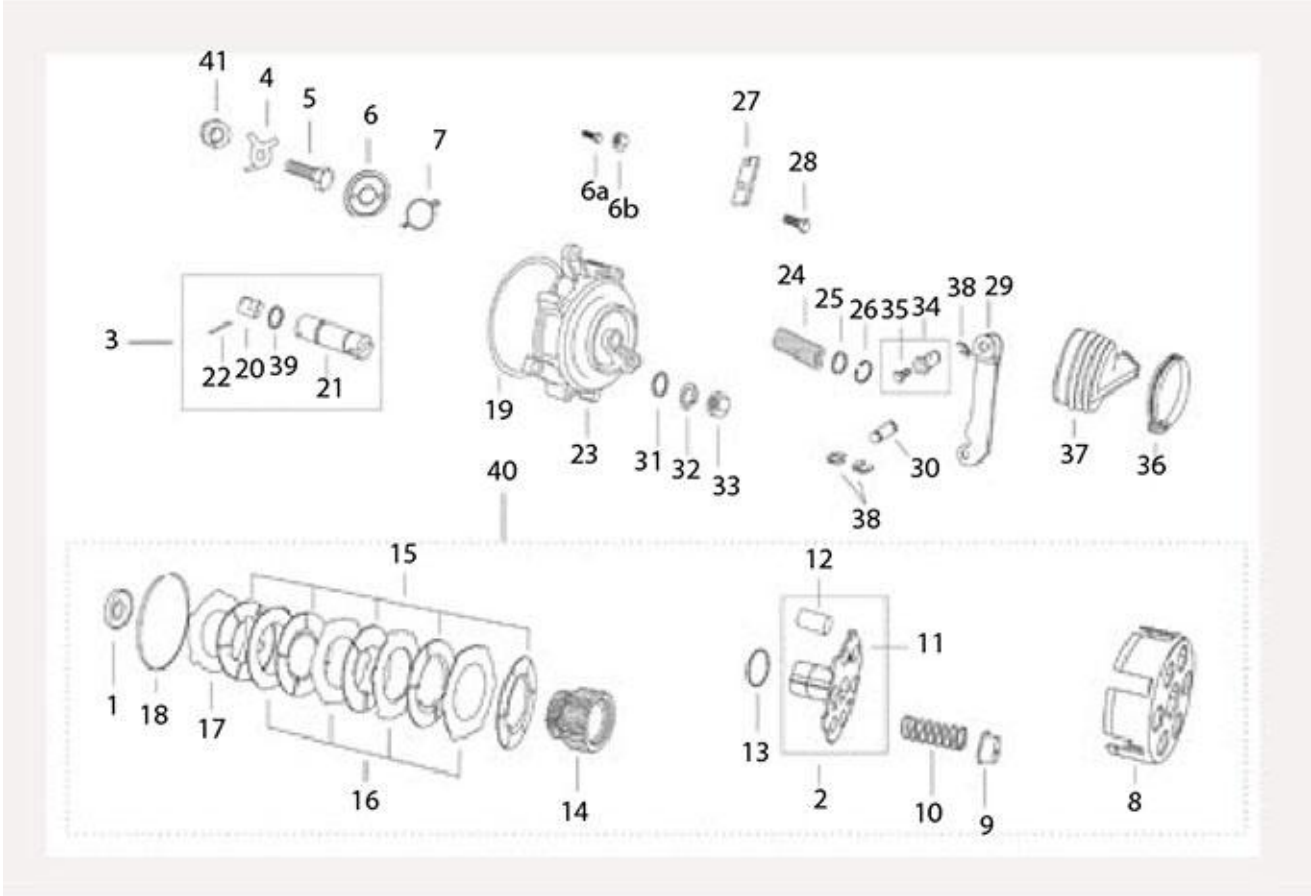
41
4
5
6
7
6a
6b
27
28
3
22
20
39
21
19
23
31
32
33
24
25
26
35
34
38
29
30
37
36
40
38
15
12
11
1
18
17
13
16
14
2
10
9
8

51

Print Date: 07-Apr-2022

1.24

CLUTCH AND CLUTCH COVER

Fig. No.	Part No.	Description	Qty	Remarks
1	652124	SPACER WASHER-CLUTCH	1	
2	1F000755	CLUTCH SHAFT ASSY. (IMPROVED)	1	
3	1A001457	PLUNGER SHAFT	1	
4	129012013	TAB WASHER	1	
5	E47177007	SCREW M8X1.25X30	1	
6	1A011547R	THRUST BEARING	1	
7	286406	SPRING CLIP	1	
8	1A001455	CLUTCH HOUSING	1	
9	127757011	CUP - CLUTCH SPRING	6	
10	B023890	CLUTCH SPRING	6	
13	127758015	SHIM	1	
14	1F000754	ENGINE GEAR (MANTANO)	1	
15	127530011	DRIVEN PLATE ASLY	5	
16	127692015	DRIVING PLATE THK. 2.0 MM	4	
17	127693019	PRESSURE PLATE OUTER (VE)	1	
18	127754019	CIRCLIP - CLUTCH BOX	1	
19	825123207	O - RING CLUTCH COVER	1	
20	120159014	PLUNGER	1	
-	-	NOT SERVICEABLE	-	
22	822031942	SPRING PIN 3 X 19	1	
24	127185012	SPRING - CLUTCH COVER	1	
25	120164019	RETAINING PLATE	1	
26	842001600	CIRCLIP DIA.16(EXT)	1	
27	127471019	BRACKET CLUTCH CABLE GUIDE	1	
28	31092	HEX. HD SCREW M6X25	1	
29	127460010	LINK ASSLY - CLUTCH (IMPROVED)	1	
30	127013013	PIN CLUTCH	1	
31	3056	PLAIN WASHER M6 OD12	4	
32	016406	SPRING WASHER	4	
33	20106	HEX NUT M6	4	
34	B024379	SCREW TERMINAL ASSLY-ENGINE STOP,D.C.	1	
35	120238016	BOLT FOR SCREW TERMINAL	1	
36	120170018	HOSE CLIP - CLUTCH COVER BELOW	1	
37	127012019	BELLOW CLUTCH ACTUATING	1	
38	843000809	CIRCLIP DIA.8(EXT) TYPE C	3	

52

Print Date: 07-Apr-2022

1.24

CLUTCH AND CLUTCH COVER

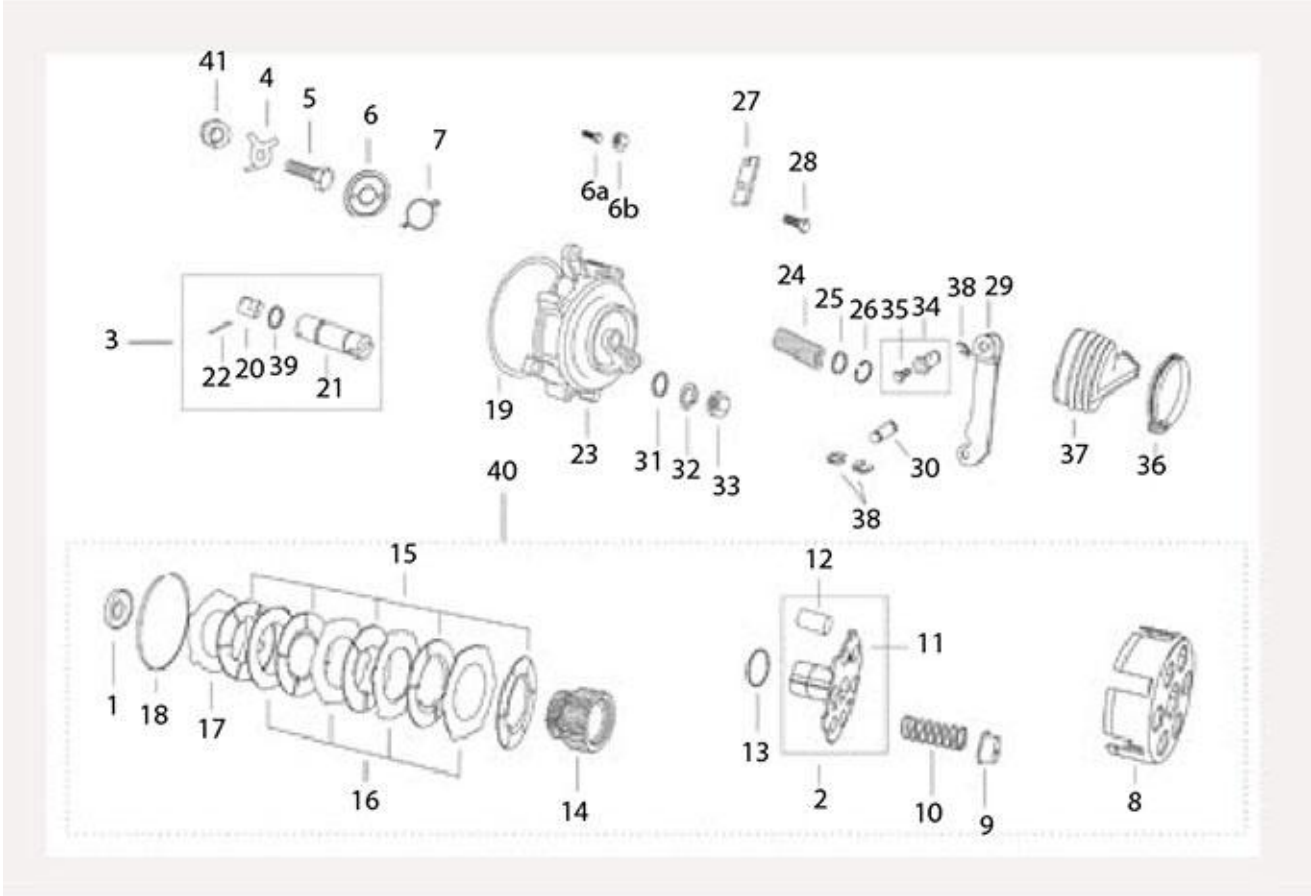
41
4
5
6
7
6a
6b
27
28
3
22
20
39
21
19
23
31
32
33
24
25
26
35
34
38
29
30
37
36
38
40
15
12
11
1
18
17
16
14
13
2
10
9
8

53

Print Date: 07-Apr-2022

1.24

CLUTCH AND CLUTCH COVER

Fig. No.	Part No.	Description	Qty	Remarks
39	B019220	O- RING (PLUNGER SHAFT)	1	
40	1F000832	CLUTCH ASSY	1	
41	129011019	WASHER FOR CLUTCH ASSY.	1	NI

54

Print Date: 07-Apr-2022

1.25
ENGINE SUPPORT

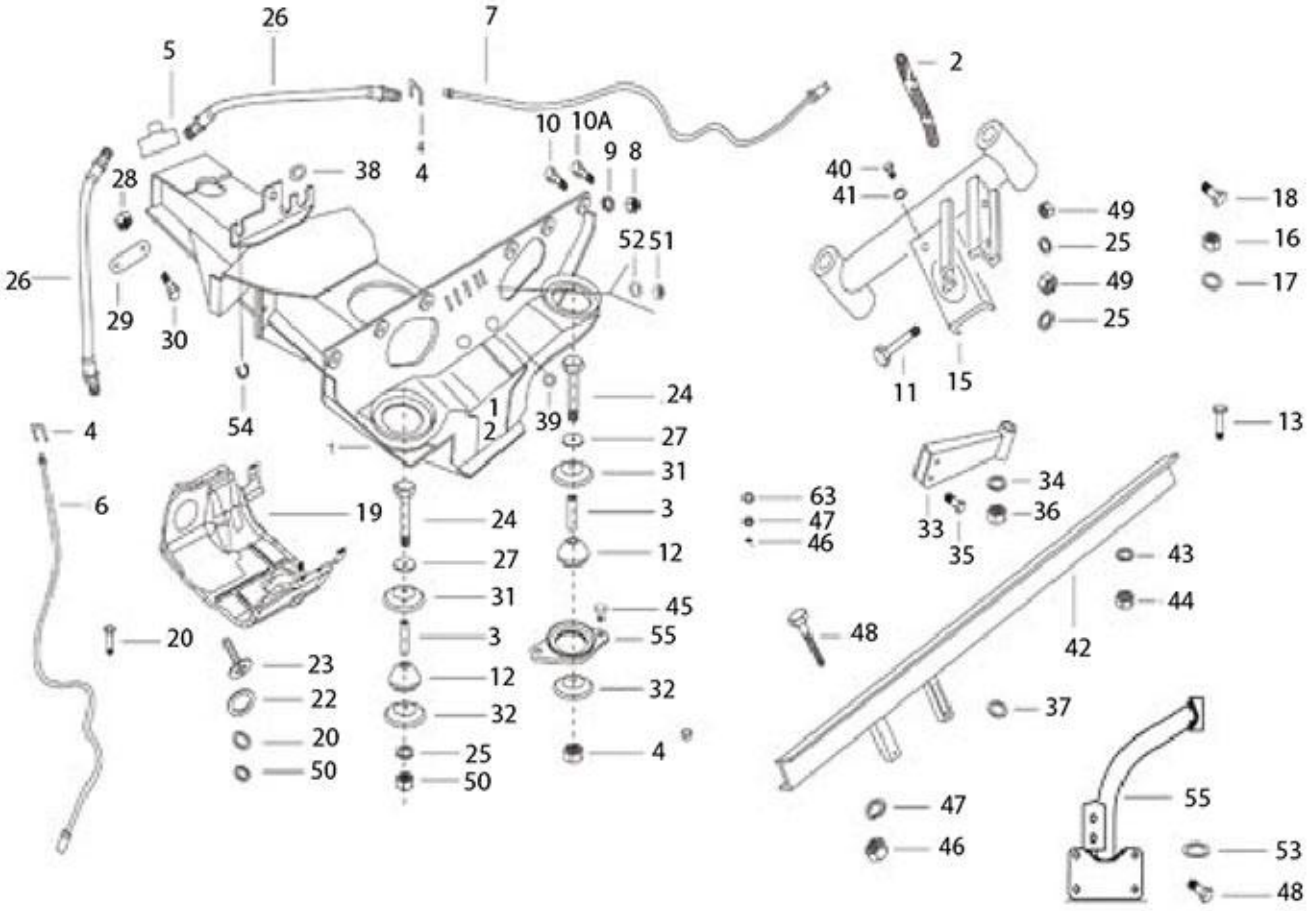
26
7
5
2
10 10A
9 8
38
4
28
40
41
49
18
25
16
52 51
49
17
26
29
30
25
11
15
24
54
1
2
39
27
13
4
31
34
6
19
24
3
63
47
46
33
36
35
27
12
43
31
45
44
20
3
55
48
42
23
12
22
32
37
20
32
25
4
50
50
47
55
46
53
48

55

Print Date: 07-Apr-2022

1.25

ENGINE SUPPORT

Fig. No.	Part No.	Description	Qty	Remarks
1	6C000382	FRAME ASSLY SUS.& ENGINE SUPPORT	1	common with BS6
1	6C000383	FRAME ASSY SUSPENSION & ENGINE SUPPORT	1	common with BS6
2	644839R	EARTHING CABLE	1	
3	569241	SPACER	3	
4	136916	PLATE FOR RETAINING THE BRAKE FLEX. PIPE	3	
5	643692	THREE WAY UNION	1	
6	644813	BRAKE PUMP TUBE OF LEFT REAR WHEEL	1	
7	644812	BRAKE PUMP TUBE OF RIGHT REAR WHEEL	1	
8	20108	HEX NUT M8	6	
9	016408	SPRING WASHER	6	
10	31119	HEX HD SCREW M8 X 25	6	
10A	632247	HEX HDD SCREW M10X30 CC8.8	2	
11	272178	HEX. HDD BOLT M8 X 122 CL 10.9	2	
12	265091	DUMPER ENGINE MTG.	3	
13	272178	HEX. HDD BOLT M8 X 122 CL 10.9	1	
14	15335	HEX HD NUT M8	3	
15	643711R	FRT CROSS MEMBER ASSY. ENG. MTG.	1	
16	231370	SELF BREAKING NUT M10	2	
17	286328	PLAIN WASHER 20X10.2X2	2	
18	568689	HEX HEAD BOLT M10X100	2	
20	604606	HEX HD. SCREW M5X20 CL8.8	2	
21	3055	PLAIN WASHER M5	3	
22	6078	PLAIN WASHER 12 X 5.2 X 1	3	
23	15911	PAN SELF TAP SCREW 8SG X 16 AB	6	
24	272178	HEX. HDD BOLT M8 X 122 CL 10.9	2	
25	016408	SPRING WASHER	3	
26	644814R	FLEXIBLE BRAKE HOSE	2	
27	2383	PLAIN WASHER M20X8.5X2	4	
28	231370	SELF BREAKING NUT M10	2	
29	632299	PLATE	2	
30	31159	HEX HD SCREW M10 X 35 CC 8.8	2	
31	569377	PLATE	2	
32	569244	PLATE	2	
33	662476	REAR ENGINE SUPPT. ARM ASSLY.	1	
34	16410	SPRING WASHER	2	

56

Print Date: 07-Apr-2022

1.25
ENGINE SUPPORT

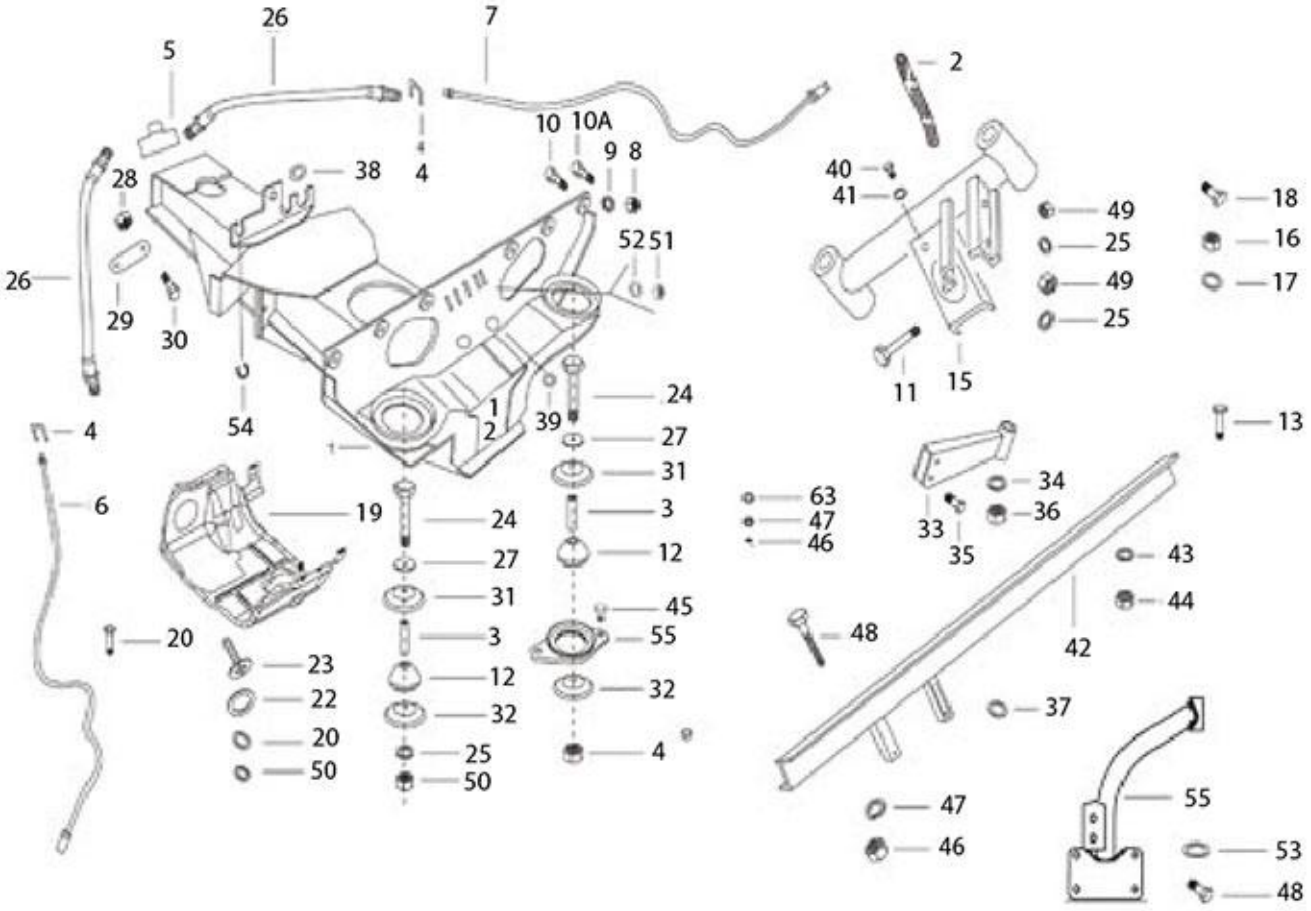
26
7
5
2
10 10A
9 8
38
4
40
41
28
49
18
25
16
52 51
49
17
26
29
30
25
11
15
24
54
1
2
39
27
13
4
31
34
6
19
24
3
63
47
46
33
36
35
27
12
43
31
45
44
20
3
55
48
42
23
12
22
32
37
20
32
25
4
50
50
47
55
46
53
48

57

Print Date: 07-Apr-2022

1.25

ENGINE SUPPORT

Fig. No.	Part No.	Description	Qty	Remarks
35	B024614	HEX HEAD BOLT M10X45 CL 10.9	2	
36	20110	HEX NUT M10	2	
37	286328	PLAIN WASHER 20X10.2X2	6	
38	178610	GROMMET	1	
39	15478	GROMMET4	2	
40	31116	HEX HD. SCREW M8X16	3	
41	3058	PLAIN WASHER 15X8.4X1.5	1	
42	B077284	CROSS MEMBER ENG. SUPP. RR SUB ASSLY. PASS	1	
42	661573ED	CROSS MEMBER ENGINE SUPPORT REAR - ED	1	
43	016408	SPRING WASHER	2	
44	20108	HEX NUT M8	2	
45	31118	SCREW M8X20	2	
46	20108	HEX NUT M8	4	
47	16410	SPRING WASHER	6	
48	568260	HEX HD BOLT M8X160 CL 8.8	2	
49	20110	HEX NUT M10	4	
50	16405	SPRING WASHER M5	2	
51	20105	PLAIN NUT M5	2	
52	3055	PLAIN WASHER M5	2	
52	6078	PLAIN WASHER 12 X 5.2 X 1	2	
53	286328	PLAIN WASHER 20X10.2X2	2	
54	568140	GROMMET	1	
55	662476	REAR ENGINE SUPPT. ARM ASSLY.	1	

58

Print Date: 07-Apr-2022

2.01

MAIN FRAME ASSY. PASSENGER & STICKER

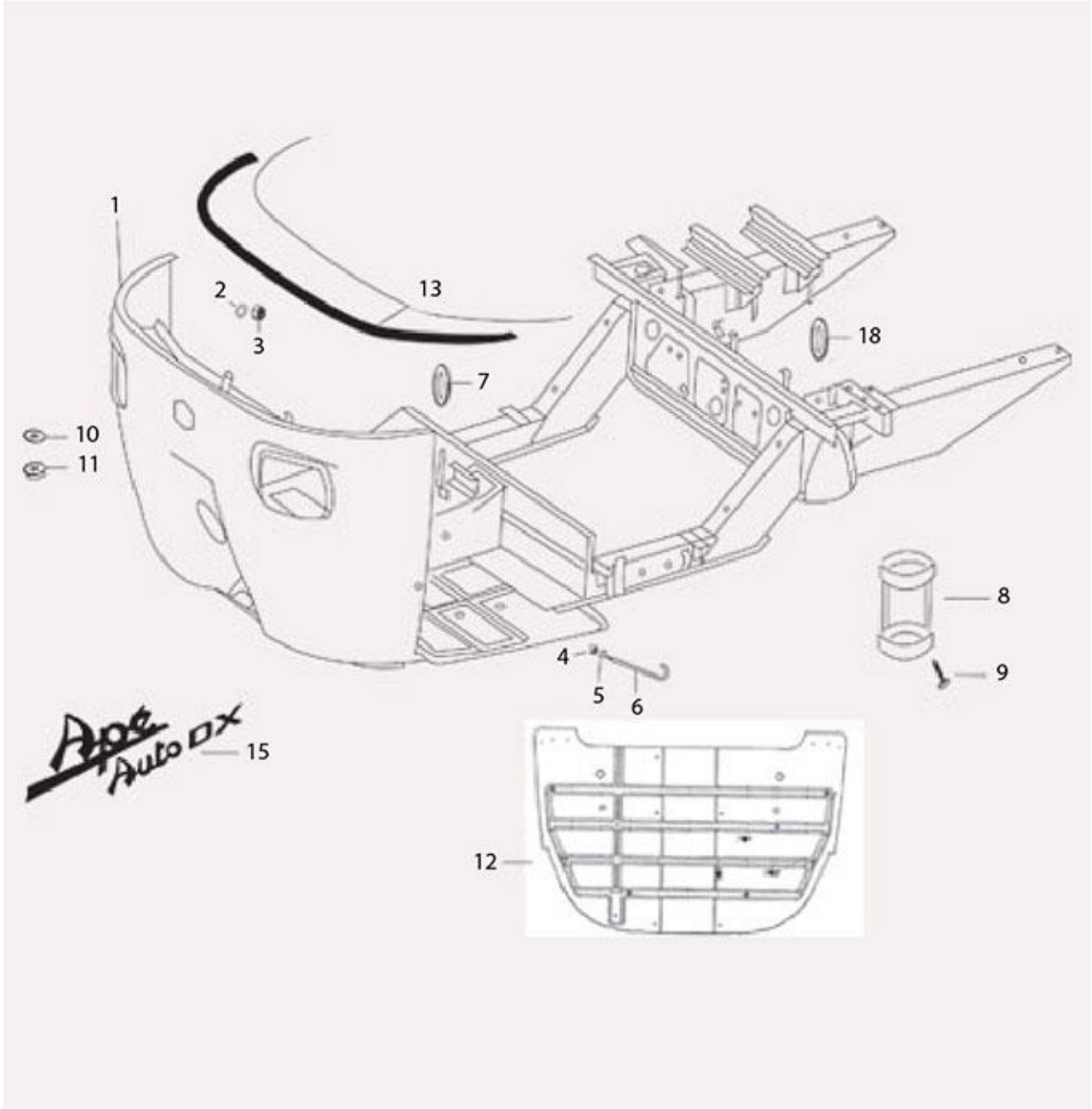
1
2
3
13
7
18
10
11
8
4
5
6
9
Ape Auto DX
15
12

59

Print Date: 07-Apr-2022

2.01

MAIN FRAME ASSY. PASSENGER & STICKER

Fig. No.	Part No.	Description	Qty	Remarks
1	B077300BY	MAIN FRAME ASSY-501 PASS CNG WC)-BY	1	
1	B077300GY	MAIN FRAME ASSY-501 PASS CNG WC)-GY	1	
1	B077300EG	MAIN FRAME ASSY-501 PASS CNG WC)-EG	1	
1	B077300WR	MAIN FRAME ASSY-501 PASS CNG WC)-WR	1	
1	B077300BW	MAIN FRAME ASSY-501 PASS CNG WC)-BW	1	
1	B078745BY	MAIN FRAME ASSY-501 PASS LPG WC)-BY	1	
1	B078745GY	MAIN FRAME ASSY-501 PASS LPG WC)-GY	1	
1	B078745EG	MAIN FRAME ASSY-501 PASS LPG WC)-EG	1	
1	B078745WR	MAIN FRAME ASSY-501 PASS LPG WC)-WR	1	
1	B078745BW	MAIN FRAME ASSY-501 PASS LPG WC)-BW	1	
2	003054	PLAIN WASHER	5	
3	20104	HEX NUT M4	5	
4	20108	HEX NUT M8	1	
5	3058	PLAIN WASHER 15X8.4X1.5	1	
6	604954	TENSION ROD	1	
7	B075964	GROMMET WIRING HAND BRAKE	1	
8	B041392	BOTTLE CARRIER STAND	1	
9	660168	PAN SELF TP. SCREW 10 SGX13AB	2	
10	109227	PROTECTION GROMMET	2	
11	604756	HOSE CLIP	2	
12	604868	CABIN FLOOR 501 CNG/LPG	1	
13	6B001946	RIM COVER JOINT (JET BLACK)	1	
14	604972	PIVOT GASKET-APE LOGO PLATE	1	NI
15	B078878	STICKER DECAL FR. DOME (APE AUTO DX)	1	
15A	6B000207	6 FT CARGO FRONT STICKER (N.I)	1	6 feet WC
16	B074657	BEEDING DOME SIDE PILLAR (LPG/CNG)	1	NI
17	B074637	BEEDING DOME SIDE PILLAR (PET/DLS)	1	NI
18	B075989	GROMMET FRT PART OF CENTRAL BEAM	1	
13A	6B001947	TERMINAL	1	NI

60

Print Date: 07-Apr-2022

2.02

CARGO CHASSIS FRAME, WINDSHIELD, GLASS & SEAT

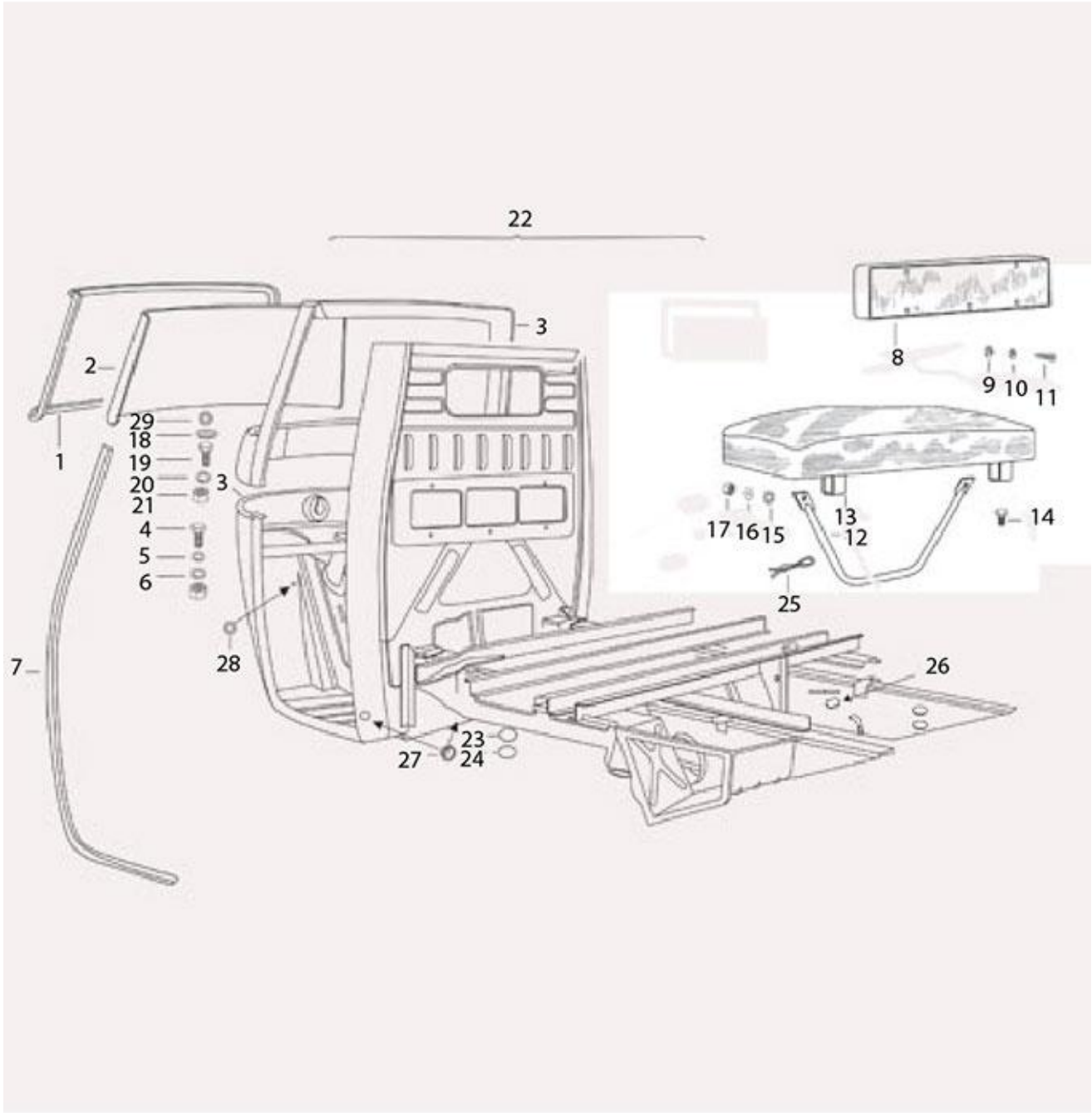
22
3
2
8
9
10
11
29
18
19
20
21
3
1
4
5
6
17
16
15
13
12
14
25
7
28
26
23
24
27

61

Print Date: 07-Apr-2022

2.02

CARGO CHASSIS FRAME, WINDSHIELD, GLASS & SEAT

Fig. No.	Part No.	Description	Qty	Remarks
1	109012	WIND SHIELD PACKING	1	
2	587963	LAMINATED WINSHIELD GLASS	1	E - Marked (Export)
3	B076098ED	WINDSCREEN FRAME ASSLY - C/O 501 BSIV DSL	1	
4	30072	HEX HEAD BOLT M8 X 35	1	
5	13861	PLAIN WASHER 20X8.2X2.5	1	
6	016408	SPRING WASHER	1	
7	118447	FRONT PACKING	1	
8	644852	DRIVER BACK REST (CARGO) (VE)	1	
9	16405	SPRING WASHER M5	4	
10	16603	PLAIN WASHER (METALLIC)	4	
11	604606	HEX HD. SCREW M5X20 CL8.8	4	
12	587849	DRIVER SEAT SUPPORT PIPE (PASSENGER)	1	pass
13	B002974	PASS DRIVER SEAT ASSY-501 CNG	1	
14	31119	HEX HD SCREW M8 X 25	2	
15	3058	PLAIN WASHER 15X8.4X1.5	2	
16	016408	SPRING WASHER	2	
17	20108	HEX NUT M8	2	
18	568154	CUT GROMMET FOR HORN	1	
19	B001386	HEX HEAD SCREW M5X20	1	
20	16405	SPRING WASHER M5	1	
21	20105	PLAIN NUT M5	1	
22	B078549BW	MAIN FRAME ASSY (501 LD CNG WC)-BW	1	501 CNG/LPG WC LD 5.5 Feet
22	B078549CB	MAIN FRAME ASSY (501 LD CNG WC)-CB	1	501 CNG/LPG WC LD 5.5 Feet
22	B078549CO	MAIN FRAME ASSY (501 LD CNG WC)-CO	1	501 CNG/LPG WC LD 5.5 Feet
22	B078549GY	MAIN FRAME ASSY (501 LD CNG WC)-GY	1	501 CNG/LPG WC LD 5.5 Feet
22	B078549EG	MAIN FRAME ASSY (501 LD CNG WC)-EG	1	501 CNG/LPG WC LD 5.5 Feet
22	B078549PA	MAIN FRAME ASSY (501 LD CNG WC)-PA	1	501 CNG/LPG WC LD 5.5 Feet
22	B078549PB	MAIN FRAME ASSY (501 LD CNG WC)-PB	1	501 CNG/LPG WC LD 5.5 Feet
22	6B001305BW	MAIN FRAME W/ DOORS_LDX +_CNG W/ HSRP-BW	1	CNG WC LDx + (6 feet)
22	6B001305CB	MAIN FRAME W/ DOORS_LDX +_CNG W/ HSRP-CB	1	CNG WC LDx + (6 feet)
22	6B001305CO	MAIN FRAME W/ DOORS_LDX +_CNG W/ HSRP-CO	1	CNG WC LDx + (6 feet)
22	6B001305GY	MAIN FRAME W/ DOORS_LDX +_CNG W/ HSRP-GY	1	CNG WC LDx + (6 feet)
22	6B001305EG	MAIN FRAME W/ DOORS_LDX +_CNG W/ HSRP-EG	1	CNG WC LDx + (6 feet)
22	6B001305PA	MAIN FRAME W/ DOORS_LDX +_CNG W/ HSRP-PA	1	CNG WC LDx + (6 feet)
22	6B001305PB	MAIN FRAME W/ DOORS_LDX +_CNG W/ HSRP-PB	1	CNG WC LDx + (6 feet)

62

Print Date: 07-Apr-2022

2.02

CARGO CHASSIS FRAME, WINDSHIELD, GLASS & SEAT

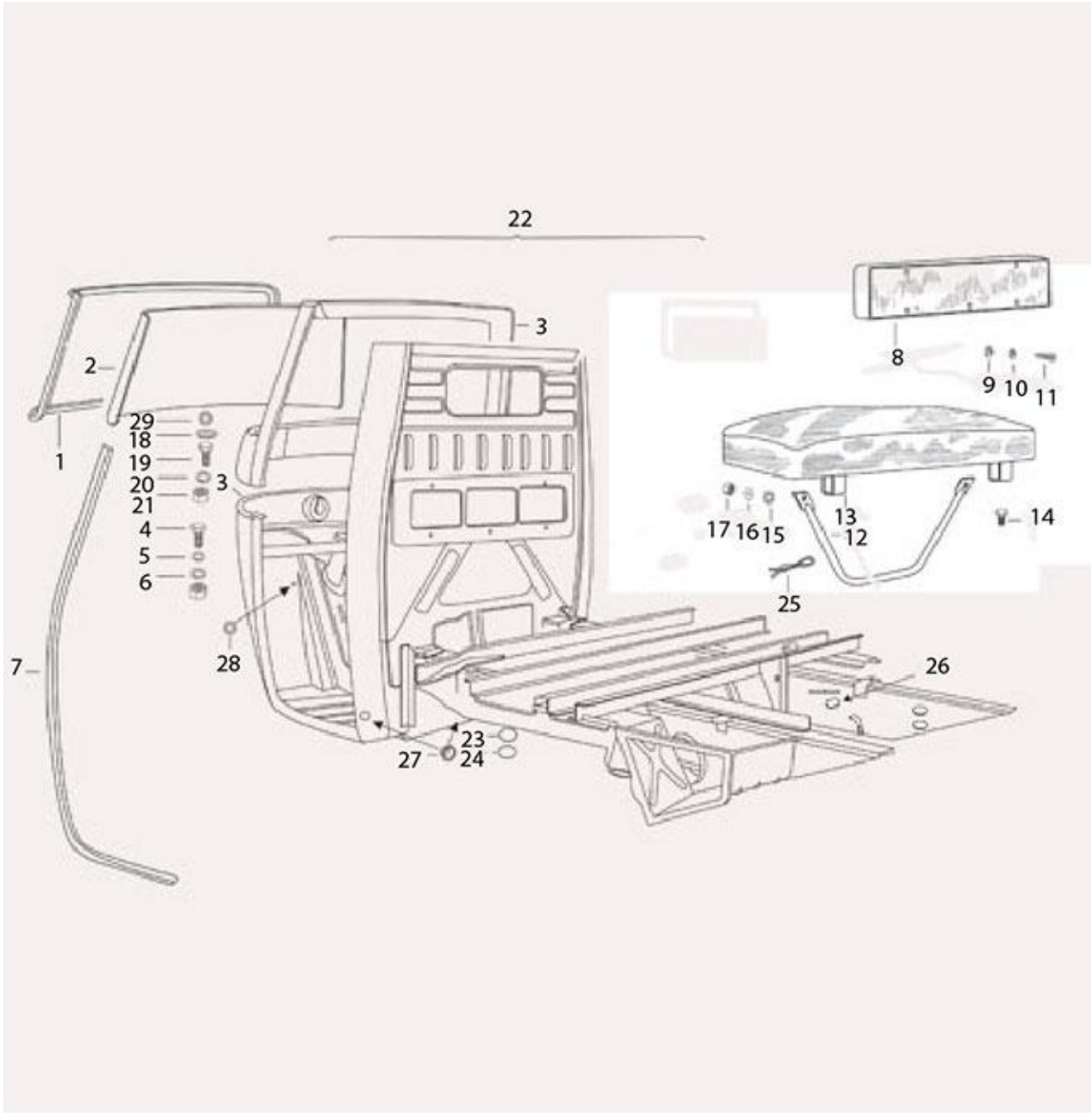
22
3
2
8
9
10
11
29
18
19
20
21
3
1
4
5
6
17
16
15
13
12
14
25
7
28
26
23
27
24

63

Print Date: 07-Apr-2022

2.02

CARGO CHASSIS FRAME, WINDSHIELD, GLASS & SEAT

Fig. No.	Part No.	Description	Qty	Remarks
22	6B001306BW	MAIN FRAME WITH DOORS_LDX +_LPG HSRP-BW	1	LPG WC LDx + (6 feet)
22	6B001306CB	MAIN FRAME WITH DOORS_LDX +_LPG HSRP-CB	1	LPG WC LDx + (6 feet)
22	6B001306CO	MAIN FRAME WITH DOORS_LDX +_LPG HSRP-CO	1	LPG WC LDx + (6 feet)
22	6B001306GY	MAIN FRAME WITH DOORS_LDX +_LPG HSRP-GY	1	LPG WC LDx + (6 feet)
22	6B001306EG	MAIN FRAME WITH DOORS_LDX +_LPG HSRP-EG	1	LPG WC LDx + (6 feet)
22	6B001306PA	MAIN FRAME WITH DOORS_LDX +_LPG HSRP-PA	1	LPG WC LDx + (6 feet)
23	128009	CAPSULE	1	
24	128010	CAP	1	
25	568682	FASTENER	2	
26	190255	GROMMET (LONG MEMBER)	5	
27	125998	PLUG	5	
28	568131	PLUG DOME DIA. 21 MM - CAB BEHIND HL	4	
29	105392	GROMMET	1	NI

64

Print Date: 07-Apr-2022

2.03

DOORS, STICKERS, TOOLS & WHEELS

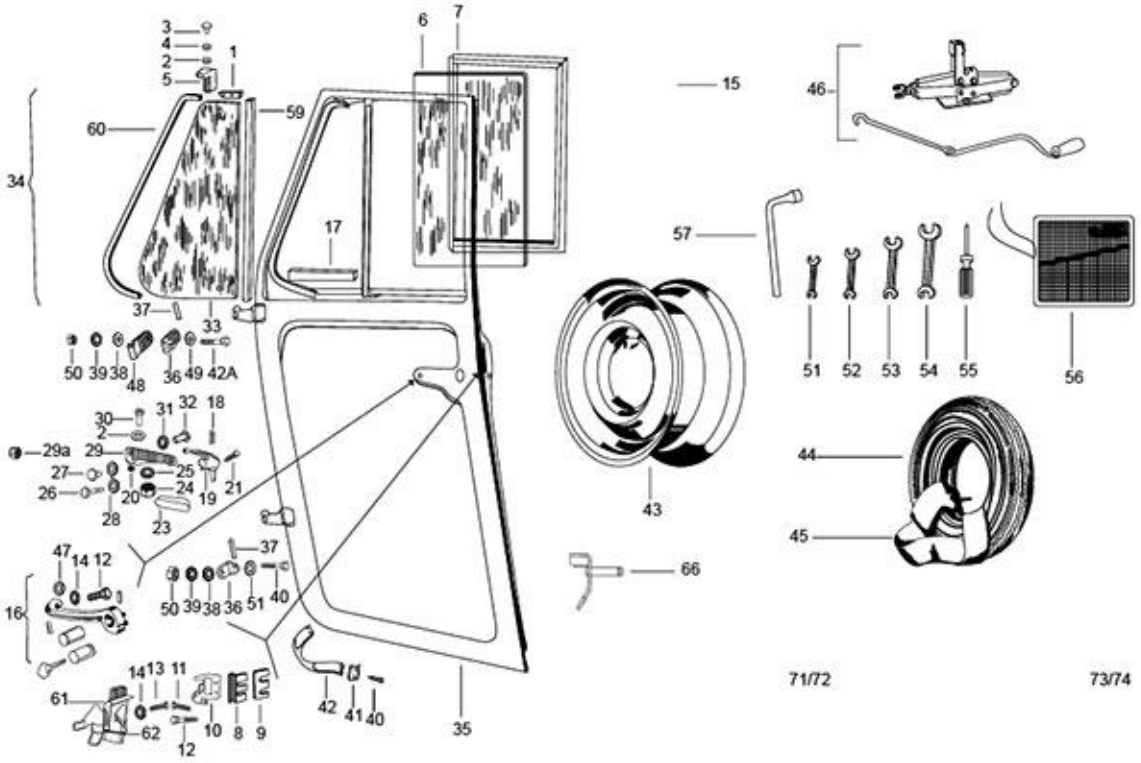
3
4
2
5
1
6
7
15
46
60
59
34
17
57
37
33
50 39 38 48 36 49 42A
51 52 53 54 55
56
30
2
31 32 18
29a
29
25
27
24
26
20
19
21
28
23
44
43
45
47 14 12
37
66
16
50 39 38 36 51 40
14 13 11
61
62
10 8 9
12
42 41 40
35
71/72
73/74

65

Print Date: 07-Apr-2022

2.03

DOORS, STICKERS, TOOLS & WHEELS

Fig. No.	Part No.	Description	Qty	Remarks
1	183077	UPPER PACKING R.H. DOOR RABBET	1	
1	163660	DEFLECTOR PANE RABBET L.H. UPPER PACKING	1	
2	97756	METALLIC PLAIN WASHER	4	
2	6965	SPRING WASHER DIA 5	2	
3	5745	RIVET DIA.7MM	2	
4	6078	PLAIN WASHER 12 X 5.2 X 1	2	
5	108800	UPPER CLAMP OF RIGHT AIR DEFLECTOR	1	
5	152025	UPPER CLAMP OF L.H. AIR REFLECTOR	1	
6	163661	FIXED GLASS FOR THE WINDOW	2	E - Marked (Export)
7	163663	GASKET, WINDOW GLASS	2	
8	140603	SECURITY LOCK CYLINDER (SHIM PLATE)1.0TH	2	
9	193724	PLATE(OPTION SHIM PLATE)	2	
10	182663	BLOCK COMPLETE OF COLLISION DOOR LOCK LH	1	
10	182662	BLOCK COMPLETE OF COLLISION DOOR LOCK RH	1	
11	569156	CSK SCREW (BLOCK CLOSING DOOR)	2	
12	569157	CSK SCREW (BLOCK CLOSING DOOR)	2	
13	30242	SLOT CH. HD. SCREW	3	
14	12546	PLAIN WASHER / MULTI TOOTH LOCK WASHER M5	8	
15	182660R	COMPLETE LOCK OF RH DOOR	1	
15	182661R	COMPLETE LOCK OF LH DOOR	1	
16	B024733	HANDLE WITH PUSH BUTTON LH WITH KEY	1	
16	B024734	HANDLE WITH PUSH BUTTON RH WITH KEY	1	
17	163659	DEFLECTOR PANE RABBET LOWER GASKET	2	
18	8808	SPRING PIN 2.5 X 14	2	
19	B003864	DEFL CLOSING LEVER RH -(PLASTIC)	1	
19	B003865	DEFL CLOSING LEVER LH (PLASTIC)	1	
20	116971	RUBBER GROMMET	2	
21	15727	PAN SELF TAPPING SCREW	2	
22	62961	MAIN SPRING FOR LEVER	2	
23	B042814	COLLISION FOR LEVER	2	
23A	97756	METALLIC PLAIN WASHER	2	
24	20108	HEX NUT M8	2	
25	64263	WINDOW FRICTION WASHER	2	
26	604558	PIVOT FOR LEVER FOR CLOSING DOORS	2	
27	108804	SCREW WITH WIDE HEAD (MALE)	4	

66

Print Date: 07-Apr-2022

2.03

DOORS, STICKERS, TOOLS & WHEELS

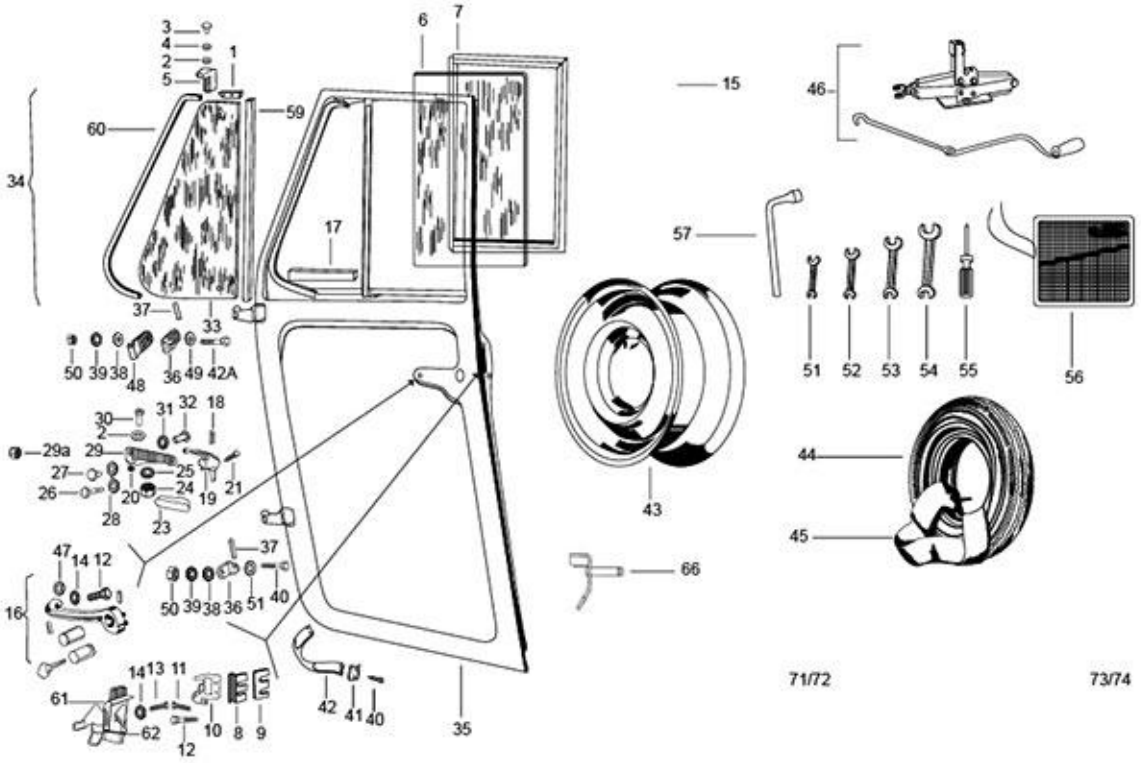
3
4
2
5
1
6
7
15
46
60
59
34
17
57
37
33
50 39 38 48 36 49 42A
51 52 53 54 55
56
30
2
31 32 18
29a
29
27
26
25
24
20
19
21
28
23
44
43
45
47 14 12
37
50 39 38 36 51 40
16
66
14 13 11
61
62
12
10 8 9
42 41 40
35
71/72
73/74

67

Print Date: 07-Apr-2022

2.03

DOORS, STICKERS, TOOLS & WHEELS

Fig. No.	Part No.	Description	Qty	Remarks
28	13935	WASHER	2	
29	108801	LOWER BKT.FOR CONNECTING R.H.DEFLECTOR	1	
29	109263	LOWER BKT.FOR CONNECTION L.H. DEFLECTOR	1	
29A	12136	NUT / NYLOCK NUT M5	2	
30	31058	HEX HEAD SCREW M5 X 16 CC8.8	2	
31	6177	PLAIN WASHER 16 X 8.5 X 1	1	
32	108805	SCREW WITH WIDE HEAD (FEMALE)	2	
32	604812	LARGE HEAD SCREW	2	
33	163665	GLASS, VENT	2	
34	163666SP	RH; VENT WINDOW ASSY.	1	E - Marked (Export)
34	163667SP	LH; VENT WINDOW ASSY.	1	E - Marked (Export)
35	B002847	RH DOOR SUB ASSLY (CED)	1	
35	B002848	LH DOOR SUB ASSLY (CED)	1	
36	632238	DOOR HINGE ASSLY UPPER	4	
37	8847	SPRING PIN 6X64	4	
38	13812	METALLIC PLAIN WASHER	2	
38	13861	PLAIN WASHER 20X8.2X2.5	2	
39	12540	SPRING WASHER M8	4	
40	8451	PAN SELF TP SCREW 6 SGX13 AB	8	
41	89281	BLOCK PLATE STRAP	4	
42	B074173	STOP BELT FOR DOOR	1	
42A	568692	PAN SELF TAP SCREW 6SG X 16AB	4	
43	644973R	WHEEL RIM ASSY.	1	
44	587971	TYRE 4.50 X 10 8 PR	1	
45	151924	INNER TUBE TYRE 4.5 X 10 INCH	4	
46	B001954R	JACK ASSEMBLY COMPONENT	1	
47	6018	PL. WASHER	2	
47A	604560	SCREW TERMINAL ASSY. - GEAR CONTROL	2	
48	605389	HINGE	2	
49	140728	PLAIN WASHER 8.5 X 24 X 3	2	
50	20108	HEX NUT M8	4	
51	567454	DOUBLE END SPANNER7/8	1	
52	567455	DE SPANNER 10X13 IS:2018(ZN PLATING)	1	
53	567456	DOUBLE END SPANNER 12/14	1	
54	567457	DE SPANNER 17/19	1	

68

Print Date: 07-Apr-2022

2.03

DOORS, STICKERS, TOOLS & WHEELS

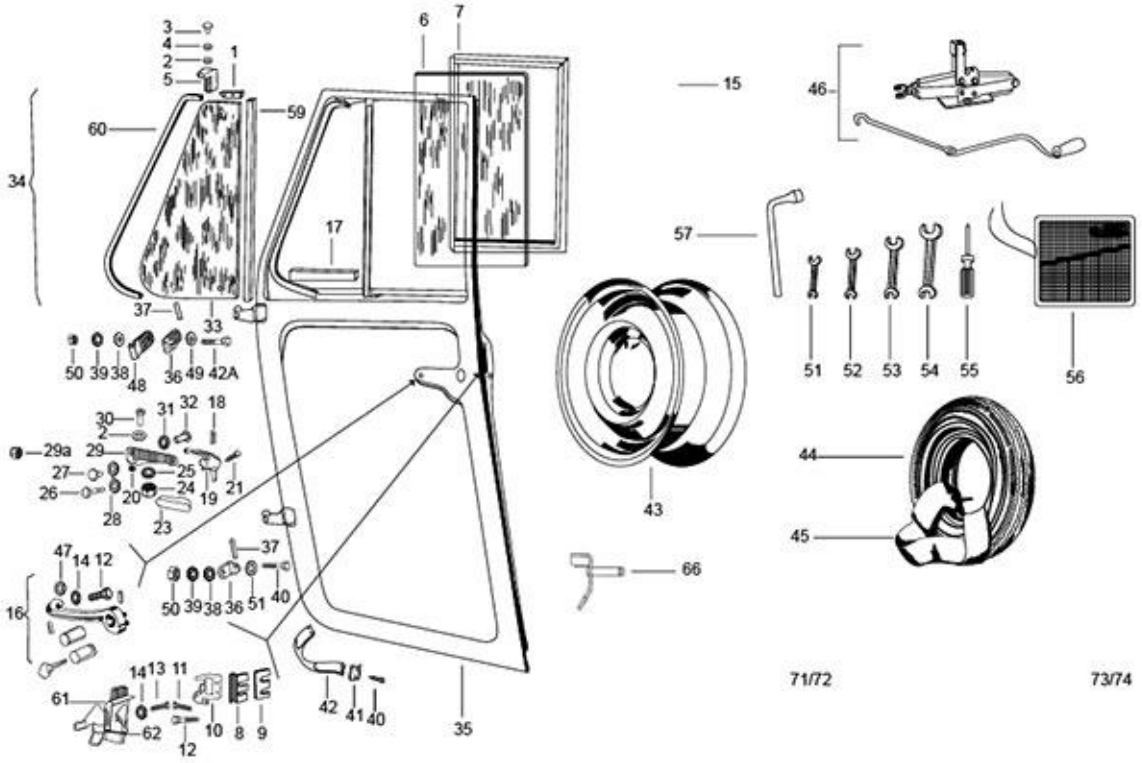
3
4
2
5
1
6
7
15
46
60
59
34
17
57
37
33
50 39 38 48 36 49 42A
51 52 53 54 55
56
30
31 32 18
2
29a
29
25
27
24
26
20
19
21
28
23
44
43
45
47
14 12
37
66
16
50 39 38 36 51 40
14 13 11
61
62
10
8
9
42 41 40
35
12
71/72
73/74

69

Print Date: 07-Apr-2022

2.03

DOORS, STICKERS, TOOLS & WHEELS

Fig. No.	Part No.	Description	Qty	Remarks
55	567458	SCREW DRIVER (-)&(+) 80	1	
56	604707	TOOL BAG	1	
57	567459	L TYPE WHEEL SPANNER (A/F19)	1	
58	E500405518	STARTING ROPE	1	
58	192020017	STARTING ROPE	1	
58A	569193	FIRST AID KIT	1	
59	163782	DEFLECTOR PANE RABBET REAR GASKET	2	
60	163784	DEFLECTOR PANE RABBET FRONT GASKET	2	
61	604689	STOPPER ASSLY RH	1	
61	604690	STOPPER ASSLY LH	1	
62	108356	SPRING FOR LOCK	1	
62	115531	SPRING FOR R.H. LOCK	1	
63	116334	L.H.DOOR GUIDE BOX ASSY	1	
64	30242	SLOT CH. HD. SCREW	3	
65	190255	GROMMET (LONG MEMBER)	1	
66	109121	LEVER COMPLETE OF LH LOCK	1	
67	116333	BOX FOR GUIDE COMPLETE OF RH DOOR	1	
68	109120	LEVER COMPLETE FOR R.H. LOCK	1	
69	B073127	APE 501 CNG/LPG TOOL KIT	1	
70	30074	HEX HEAD BOLT M8 X 40 CL 8.8	1	
71	B078929	STICKER DECAL FR. DOME (APE XTRA DX)	2	
72	B078927	STICKER DECAL SIDE PANEL (XTRA DX)	2	
72A	6B000208	6 FT CARGO SIDE PANEL STICKER (N.I)	2	6 feet WC
73	B078876	STICKER DECAL FR. DOME (APE XTRA LDX)	2	
74	B078870	STICKER DECAL SIDE PANEL (XTRA LDX)	2	

70

Print Date: 07-Apr-2022

2.04

DASHBOARD, HEADLAMP ASSY. & FRONT MUDGAURD

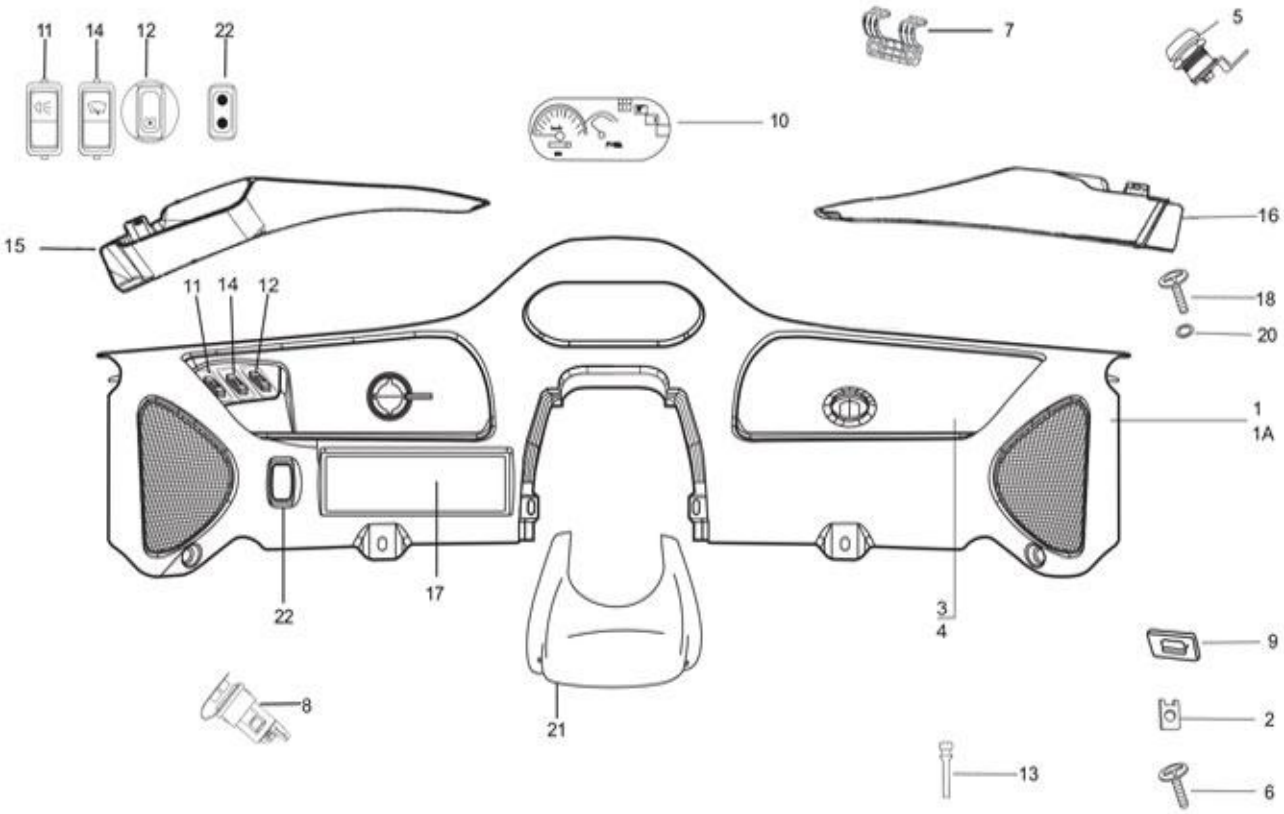
11
14
12
22
7
5
10
15
16
11
14
12
18
20
1
1A
22
17
3
4
9
8
21
2
13
6

71

Print Date: 07-Apr-2022

2.04

DASHBOARD, HEADLAMP ASSY. & FRONT MUDGAURD

Fig. No.	Part No.	Description	Qty	Remarks
1	B078314	DASHBOARD ASSLY 501 (WATER COOLED)	1	
2	8080	SPRING PLATE	4	
3	B073810	GLOVE BOX COVER	1	
4	568671	GASKET - GLOW BOX COVER (N.I.)	4	
5	B024169	GLOVE BOX LOCK WITH KEY	1	
6	643691	BOLT LOCK PLATE	4	
7	B073814	HINGE	1	
8	B074905	MOBILE CHARGER	1	
9	643691	BOLT LOCK PLATE	1	
10	B078480	INST. CLUSTER _501 _GAS (WC)	1	
11	B073478R	SWITCH 3 POSITION	1	
12	B073481R	HAZARD WARNING SWITCH WITH CROWN CAP (12V)(VE)	1	
13	B074275	RUBBER DAMPER	10	
14	B073479R	WIPER MOTOR SWITCH/ SWITCH WIPER MOTOR	1	
15	B073815	UPPER COVER DASH BOARD - LH	1	
16	B073816	UPPER COVER DASH BOARD - RH	1	
17	B073812	UTILITY BOX	1	
18	661925	PHILIP PAN HEAD SCREW (M5 X 0.8 X 1.6)	8	
19	B074262	PIN	2	
20	003054	PLAIN WASHER	8	
21	B073811	STEERING COLUMN COVER	1	
22	B075732	FUEL CHANGE OVER SWITCH	1	

72

Print Date: 07-Apr-2022

2.05
CHASSIS COMPONENTS

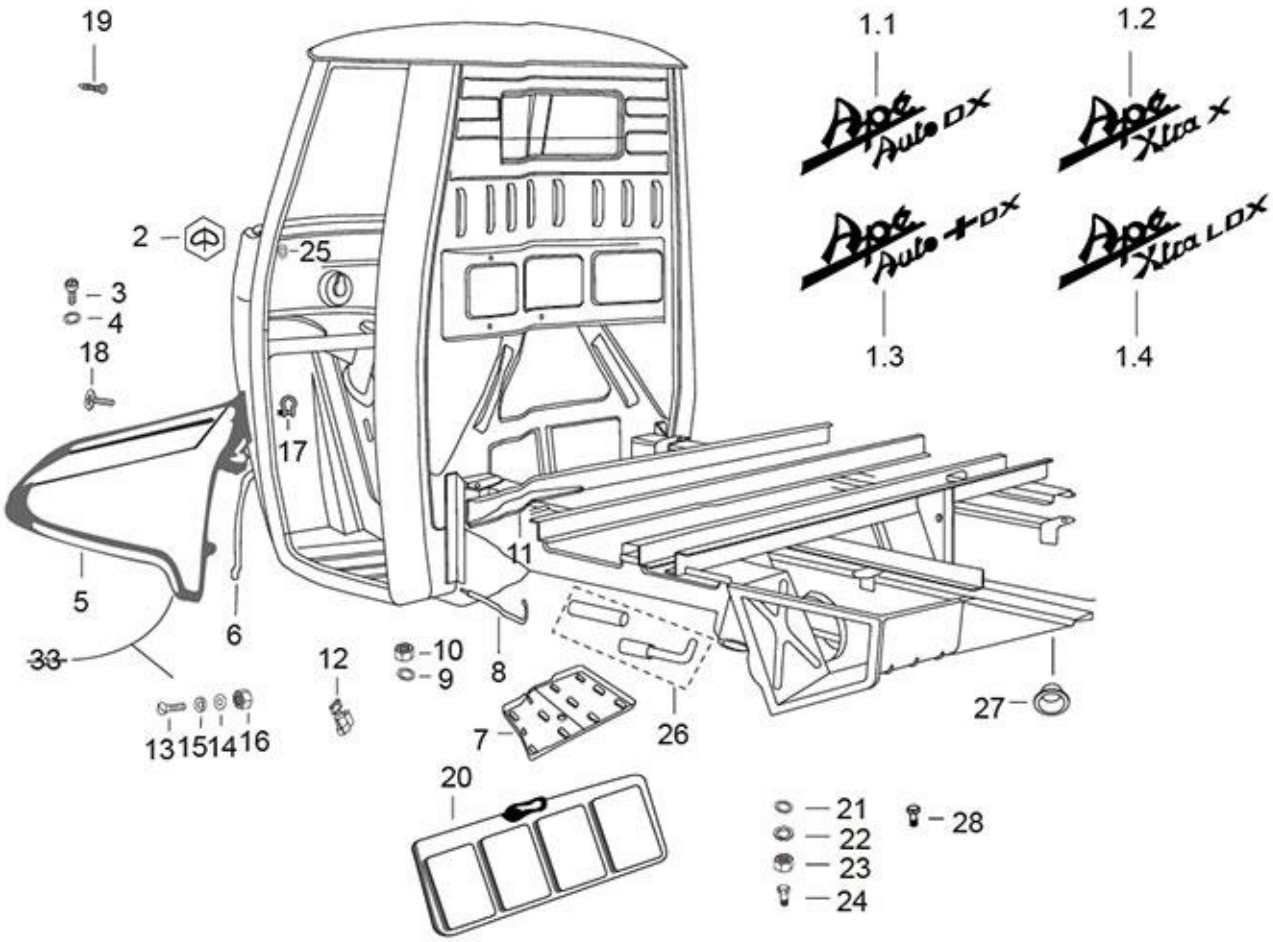
19
1.1
1.2
2
25
3
4
18
1.3
1.4
17
11
5
6
33
12
10
9
8
13
15
14
16
7
26
27
20
21
22
23
24
28

73

Print Date: 07-Apr-2022

2.05

CHASSIS COMPONENTS

Fig. No.	Part No.	Description	Qty	Remarks
1.1	B078878	STICKER DECAL FR. DOME (APE AUTO DX)	1	
1.2	B078929	STICKER DECAL FR. DOME (APE XTRA DX)	1	
1.3	B078927	STICKER DECAL SIDE PANEL (XTRA DX)	1	
1.4	B078876	STICKER DECAL FR. DOME (APE XTRA LDX)	1	
2	B076120	HEXAGONAL EMBLEM	1	
3	15727	PAN SELF TAPPING SCREW	2	
4	B008167	PL WASHER 12X3.2X1	2	
5	B075974	FRONT MUDGUARD	1	
6	B076801	FRONT MUDGUARD RUBBER BEADING	1	
6.1	B076802	FRONT MUDGUARD PARTITION RUBBER BEADING	2	
7	616649	BATTERY TRAY	1	
8	604954	TENSION ROD	1	
9	3058	PLAIN WASHER 15X8.4X1.5	1	
10	20108	HEX NUT M8	1	
11	604691	ANGLE BAR ASSLY	1	
12	B024179	SPARE WHEEL LOCK WITH KEY	1	
13	31092	HEX. HD SCREW M6X25	2	
14	013880	PLAIN WASHER	12	
15	78307	BENT SPRING WASHER M6	6	
16	20106	HEX NUT M6	6	
17	157716	SCREW ANCHORE	3	
18	18630	PAN SELF TAP SCREW 6SG X 25AB	3	
19	8265	SELF TAPPING SCREW	2	
20	116103	MUD FLAP FRONT	1	
21	013880	PLAIN WASHER	4	
22	016406	SPRING WASHER	4	
23	20106	HEX NUT M6	4	
24	31088	HEX HD SCREW M6 X 16 CL 8.8 (811061623)	4	
25	003054	PLAIN WASHER	2	
26	632508	TENSION ROD ASSY. (BATTERY MOUNTING.)	1	
27	568131	PLUG DOME DIA. 21 MM - CAB BEHIND HL	2	
28	31089	HEX HEAD SCREW M6X18 CL 8.8	4	
29	B078872	STICKER DECAL SIDE PANEL (AUTO DX)	1	
30	B078927	STICKER DECAL SIDE PANEL (XTRA DX)	1	
31	B078913	STICKER DECAL SIDE PANEL (AUTO + DX)	1	

74

Print Date: 07-Apr-2022

2.05
CHASSIS COMPONENTS

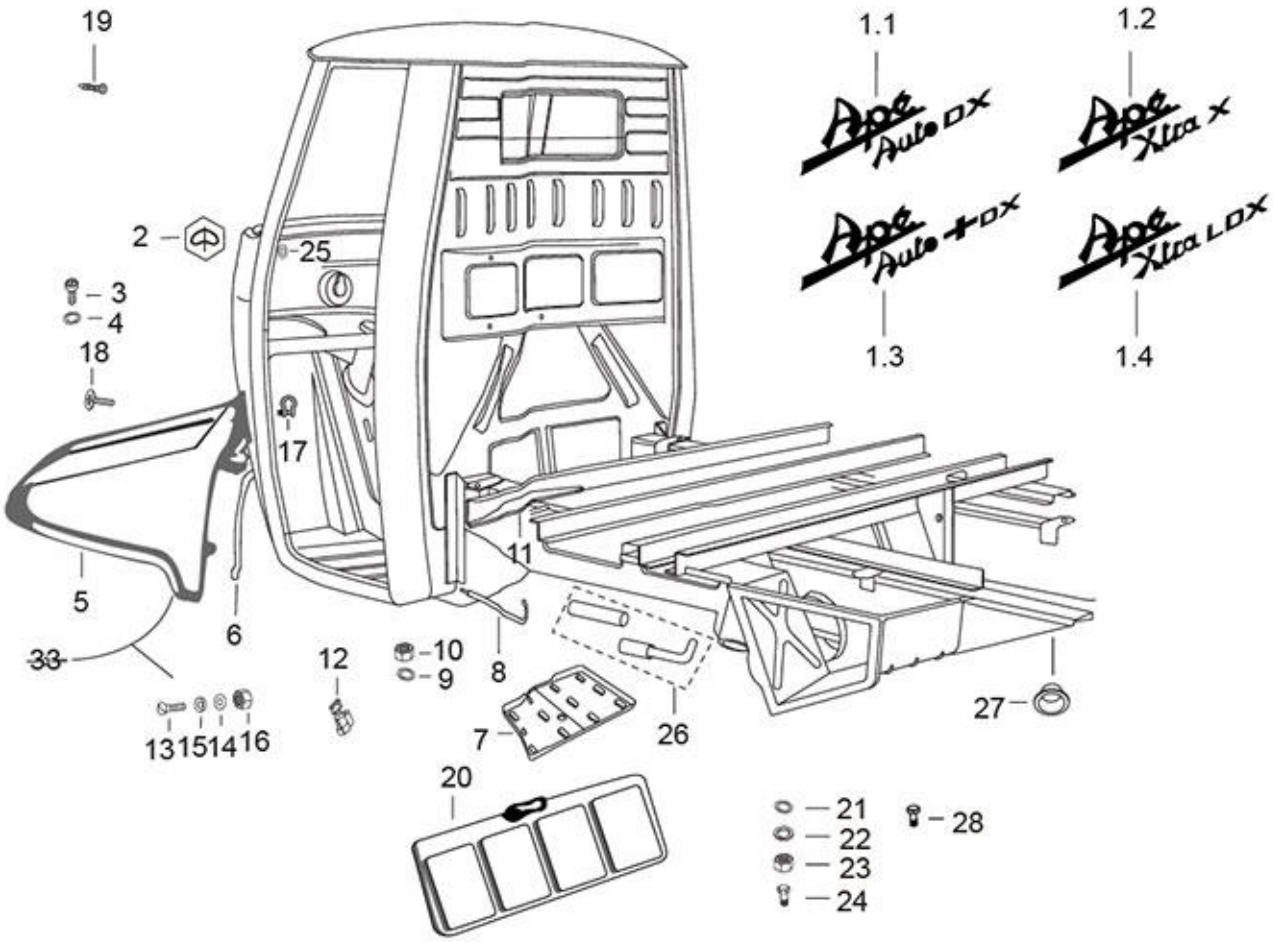
19
1.1
1.2
Ape Auto DX
Ape Xtra X
Ape Auto LDX
Ape Xtra LDX
1.3
1.4
2
25
3
4
18
17
11
5
6
33
12
10
9
8
13
15
14
16
7
26
27
20
21
22
23
24
28

75

Print Date: 07-Apr-2022

2.05

CHASSIS COMPONENTS

Fig. No.	Part No.	Description	Qty	Remarks
32	B078870	STICKER DECAL SIDE PANEL (XTRA LDX)	1	

76

Print Date: 07-Apr-2022

2.06

RUBBER MAT, REAR MUDGUARD

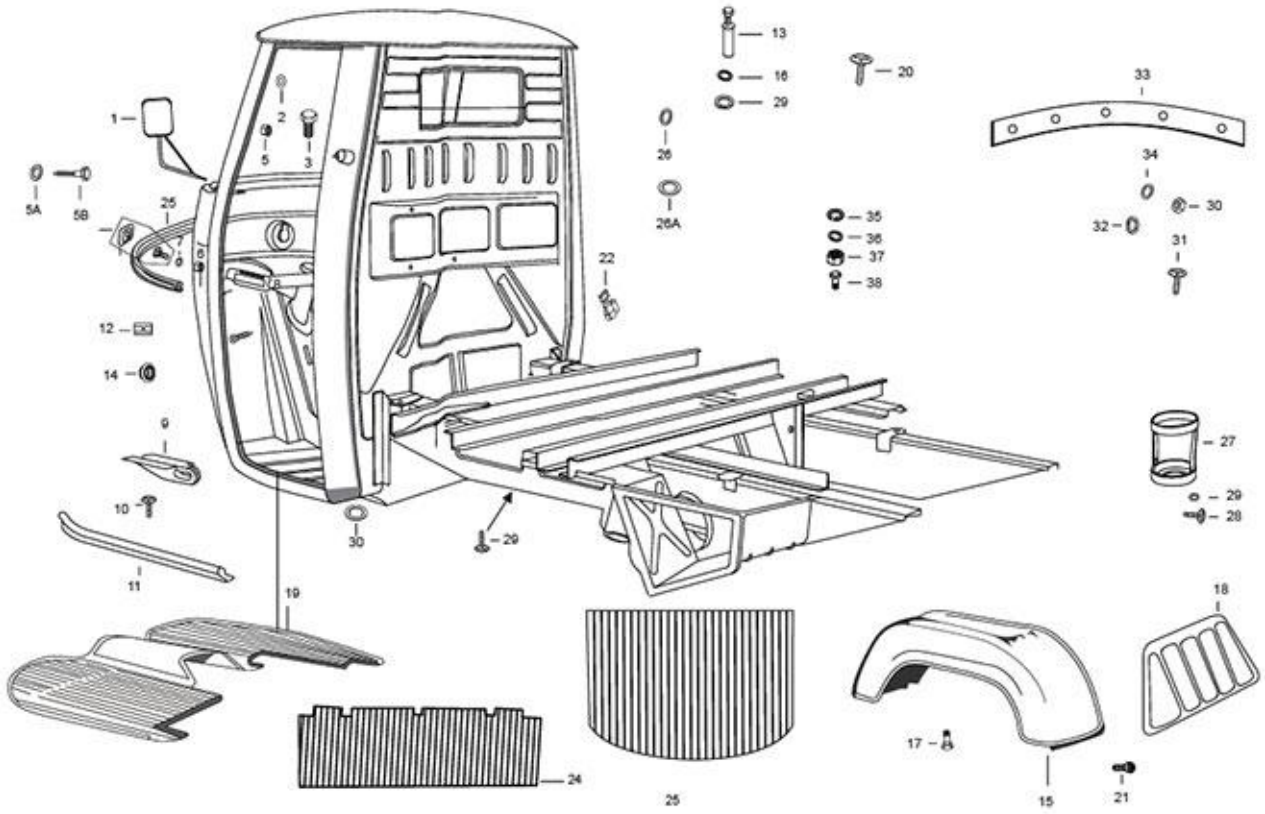
1
2
3
5
5A
5B
6
7
8
9
10
11
12
13
14
15
16
17
18
19
20
21
22
24
25
26
26A
27
28
29
30
31
32
33
34
35
36
37
38

77

Print Date: 07-Apr-2022

2.06

RUBBER MAT, REAR MUDGUARD

Fig. No.	Part No.	Description	Qty	Remarks
1	643685R	OUTER REAR VIEW MIRROR LH ASSY.	1	
1	643684R	OUTER REAR VIEW MIRROR RH ASSY.	1	
2	016408	SPRING WASHER	2	
2	12540	SPRING WASHER M8	2	
3	30072	HEX HEAD BOLT M8 X 35	2	
4	20108	HEX NUT M8	2	
5	6B001946	RIM COVER JOINT (JET BLACK)	1	
5A	14034	'O' RING	1	
5B	15911	PAN SELF TAP SCREW 8SG X 16 AB	2	
6	190462	PLATE ASSY.	5	
7	003054	PLAIN WASHER	5	
8	20104	HEX NUT M4	5	
10	8432	SCREW	6	
11	661634	PROTECTION GUIDE (LH) -VE	1	
11	661635	PROTECTION GUIDE (RH) -VE	1	
12	B024855	TERMINAL	2	
13	15911	PAN SELF TAP SCREW 8SG X 16 AB	2	
14	76227	GROMMET	1	
15	B042612	REAR MUDGUARD RH/LH	2	
16	16603	PLAIN WASHER (METALLIC)	8	
17	604603	RIVET	8	
18	142424	MUDFLAP FOR RR MUDGUARD	1	
19	645081	CABIN MAT	1	
20	414948	KNOB CARPET	4	
21	142425	BUTTON	4	
22	644979	CABIN MAT	1	
22	645081	CABIN MAT	1	
23	661493	PASSENGER COMPARTMENT CARPET (UPGRADE)	1	
24	B009701	PASS. SPACE REAR CARPET (V.E)	1	
25	190462	PLATE ASSY.	5	
25 A	190479	JACK ASSY. COMPONENT	5	
26	3055	PLAIN WASHER M5	1	
26 A	6078	PLAIN WASHER 12 X 5.2 X 1	2	
27	645141	BOTTLE CARRIER STAND	1	
28	31058	HEX HEAD SCREW M5 X 16 CC8.8	2	

78

Print Date: 07-Apr-2022

2.06

RUBBER MAT, REAR MUDGUARD

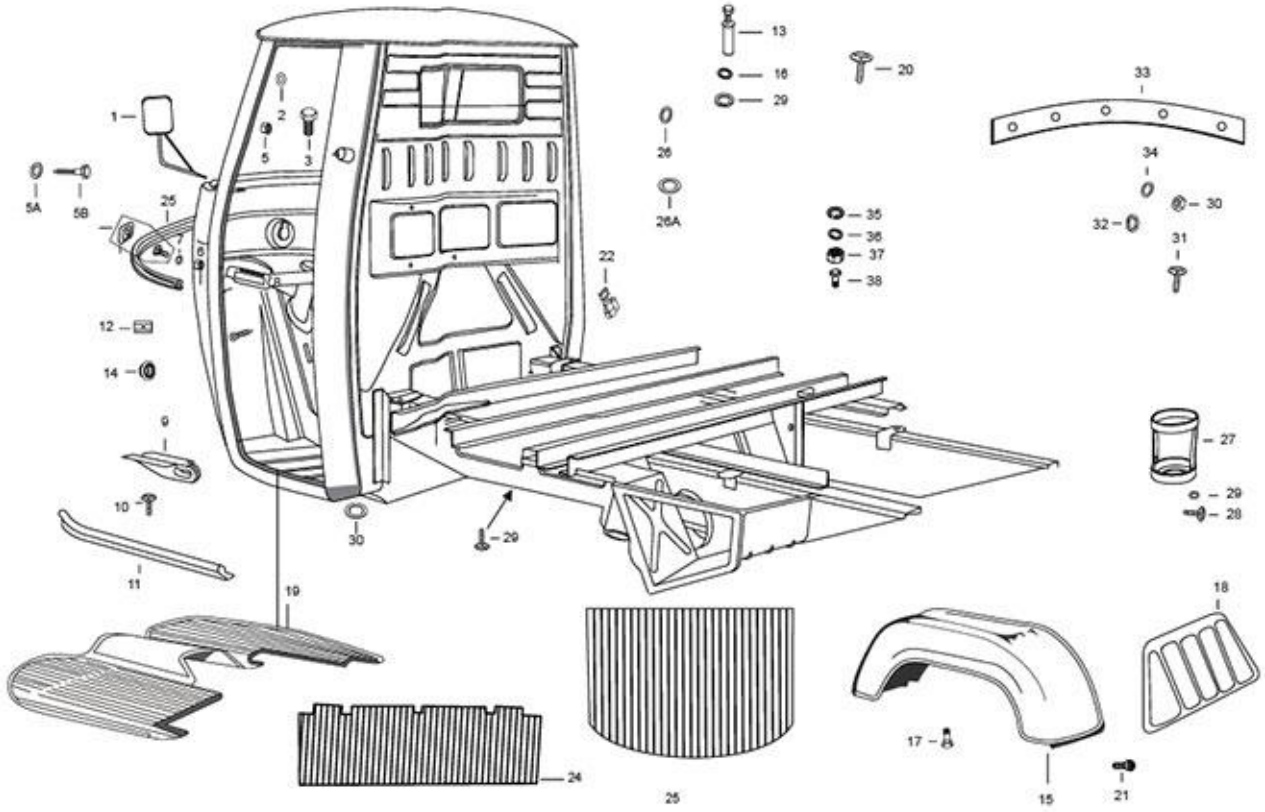
1
2
3
5
5A
5B
6
7
8
9
10
11
12
13
14
15
16
17
18
19
20
21
22
24
25
26
26A
27
28
29
30
31
32
33
34
35
36
37
38

79

Print Date: 07-Apr-2022

2.06

RUBBER MAT, REAR MUDGUARD

Fig. No.	Part No.	Description	Qty	Remarks
29	16405	SPRING WASHER M5	4	
30	20105	PLAIN NUT M5	7	
31	14628	CSK SELF TP.SCREW 6SG X 16 AB	10	
32	3055	PLAIN WASHER M5	7	
32	568135	WASHER(NI PLATED)	10	
33	587961	PROFILE SECTION SHORT FOR CARPET	1	
33	587962	PROFILE	1	
34	16405	SPRING WASHER M5	7	
35	12540	SPRING WASHER M8	2	
36	13861	PLAIN WASHER 20X8.2X2.5	2	
37	20108	HEX NUT M8	2	
38	30072	HEX HEAD BOLT M8 X 35	2	

80

Print Date: 07-Apr-2022

2.07
REAR SUSPENSION

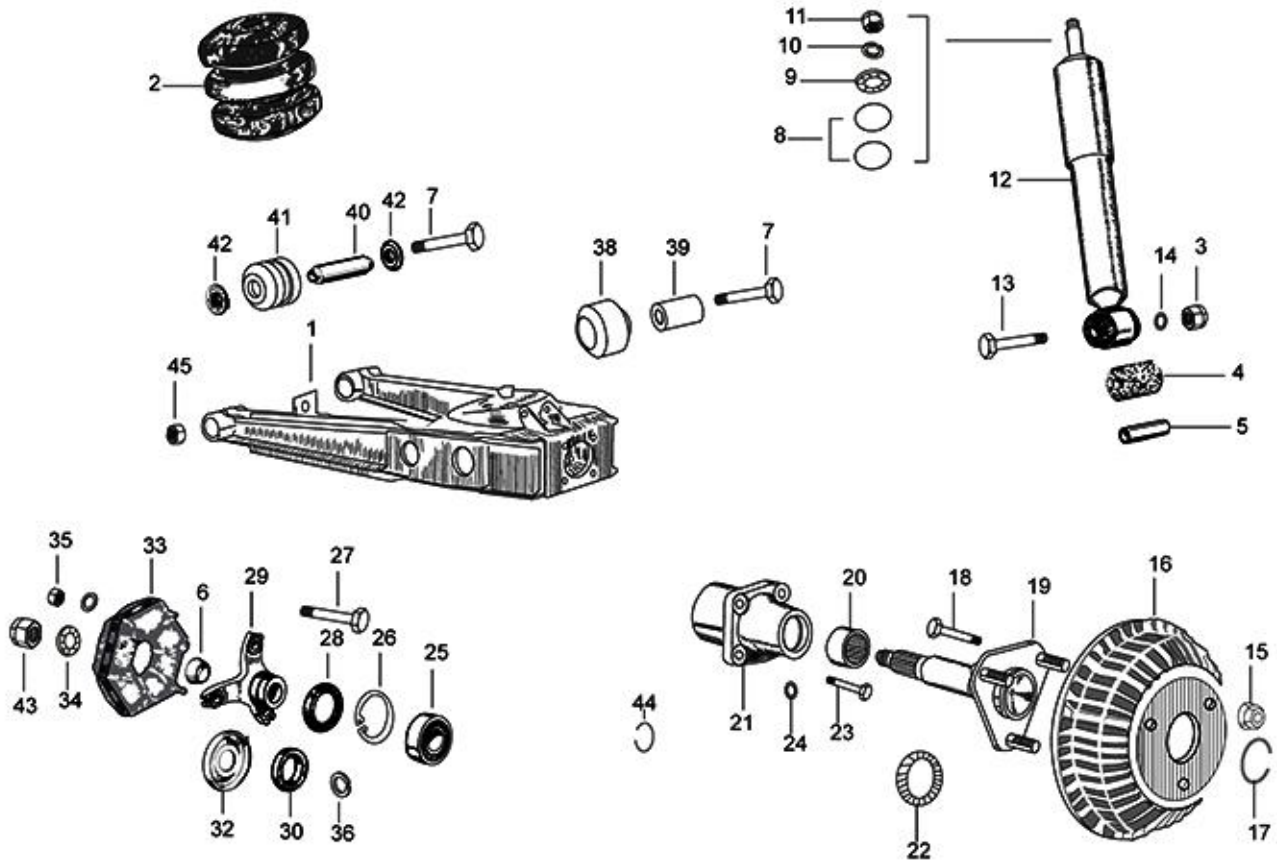
2
11
10
9
8
12
42
41
40
42
7
38
39
7
14
3
13
1
45
4
5
35
33
27
29
6
28
26
25
43
34
32
30
36
44
20
18
19
16
21
24
23
15
22
17

81

Print Date: 07-Apr-2022

2.07

REAR SUSPENSION

Fig. No.	Part No.	Description	Qty	Remarks
1	6C000363	ARM ASSLY RH RR SUSP. WITH BUSH-REG	1	Communized with BS6
1	6C000362	ARM ASSLY LH RR SUSP. WITH BUSH-REG	1	Communized with BS6
2	568289	RUBBER BUMPER	2	
3	231370	SELF BREAKING NUT M10	2	
4	157103	BUSH - SHOCK ABSORBER	2	
5	107827	SPACER	1	
6	128633	CONE	2	
7	643741	HEX HDD BOLT M10 X 80 CL 12.9	4	
8	157103	BUSH - SHOCK ABSORBER	4	
9	6066	PL WASHER 10.5X38X9	2	
10	16410	SPRING WASHER	2	
11	20110	HEX NUT M10	2	
12	136451R	SHOCK ABSORBER REAR	2	
13	267068	HEX HEAD BOLT M10 X 60 CC 10.9	2	
14	286328	PLAIN WASHER 20X10.2X2	2	
15	660931	WHEEL NUT (M12 X 1.5)	3	
16	152580	BRAKE DRUM APE - 501	2	
17	107870	ELASTIC RING	2	
18	652520	BOLT FOR AXLE M12 X 40 (VE WHEEL RIM)	3	
19	6C000060	WHEEL AXLE	2	(Modified)
19A	12790	SPLIT PIN	2	
20	661282	NEEDLE ROLLER BEARING	2	
21	6C000662	REAR WHEEL HUB	2	
22	20359	SEAL RING	2	
23	31159	HEX HD SCREW M10 X 35 CC 8.8	8	
24	16410	SPRING WASHER	8	
25	243303R	DEEP GROVE BALL BRG-RR WH AXLE	2	
26	6650	CIRCLIP DIA 50 (INT)	2	
27	15594	HEX HDD BOLT M10 X 35	12	
27	B024373	ALLEN BOLT M10X65 CL 10.9	6	
28	196302	OIL SEAL	2	
29	587617	ELASTIC JOINT CONNECTION HUB (WHL - SIDE)	2	
30	661267	RING	2	
31	602120	LEFT BRAKE JAW HOLDING CABLE PLATE	1	NI
31	602123	RIGHT BRAKE JAW HOLDING CABLE PLATE	1	NI

82

Print Date: 07-Apr-2022

2.07
REAR SUSPENSION

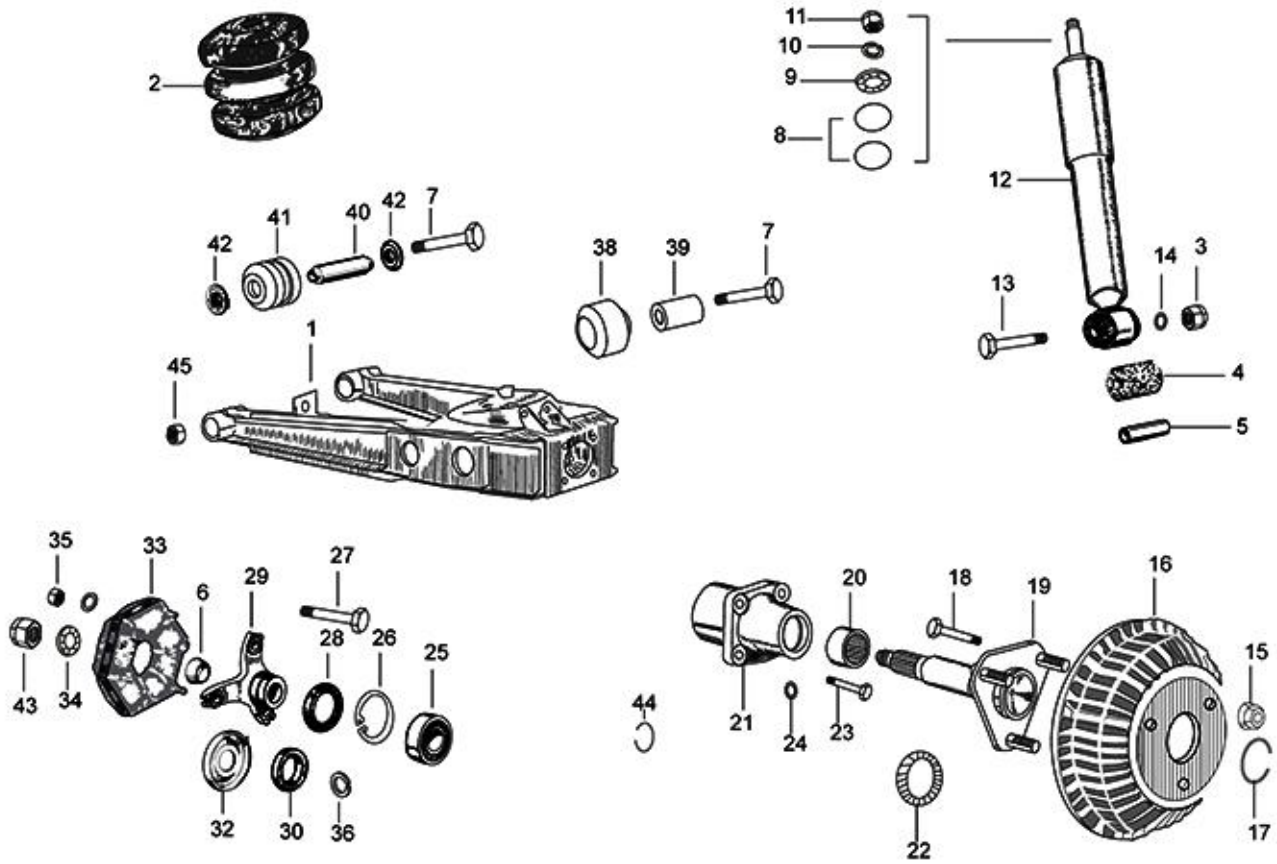
2
11
10
9
8
12
42
41
40
42
7
38
39
7
14
3
13
1
45
4
5
35
33
27
29
6
28
26
25
43
34
32
30
36
44
20
18
19
16
21
24
23
15
22
17

83

Print Date: 07-Apr-2022

2.07

REAR SUSPENSION

Fig. No.	Part No.	Description	Qty	Remarks
32	109892	PROTECTION CUP RR HUB	2	
33	604535	FLEXIBLE COUPLING	1	
34	3068	PLAIN WASHER	2	
35	231370	SELF BREAKING NUT M10	12	
36	226596	BUSH FRONT RING FOR ELASTIC SUPPORT	2	
37	226662	RING FOR ELASTIC SUPPORT	2	NI
38	226661	INTERNAL BUSH	2	
39	569241	SPACER	2	
40	226596	BUSH FRONT RING FOR ELASTIC SUPPORT	2	
41	661266	SHOULDER WASHER	4	
42	237246	SHIM WASHER 20X10.2X1	12	
43	136426	NUT WITH COLLAR	2	
44	137026	SPRING RING	4	

84

Print Date: 07-Apr-2022

2.08

STEERING COLUMN AND FRONT SUSPENSION

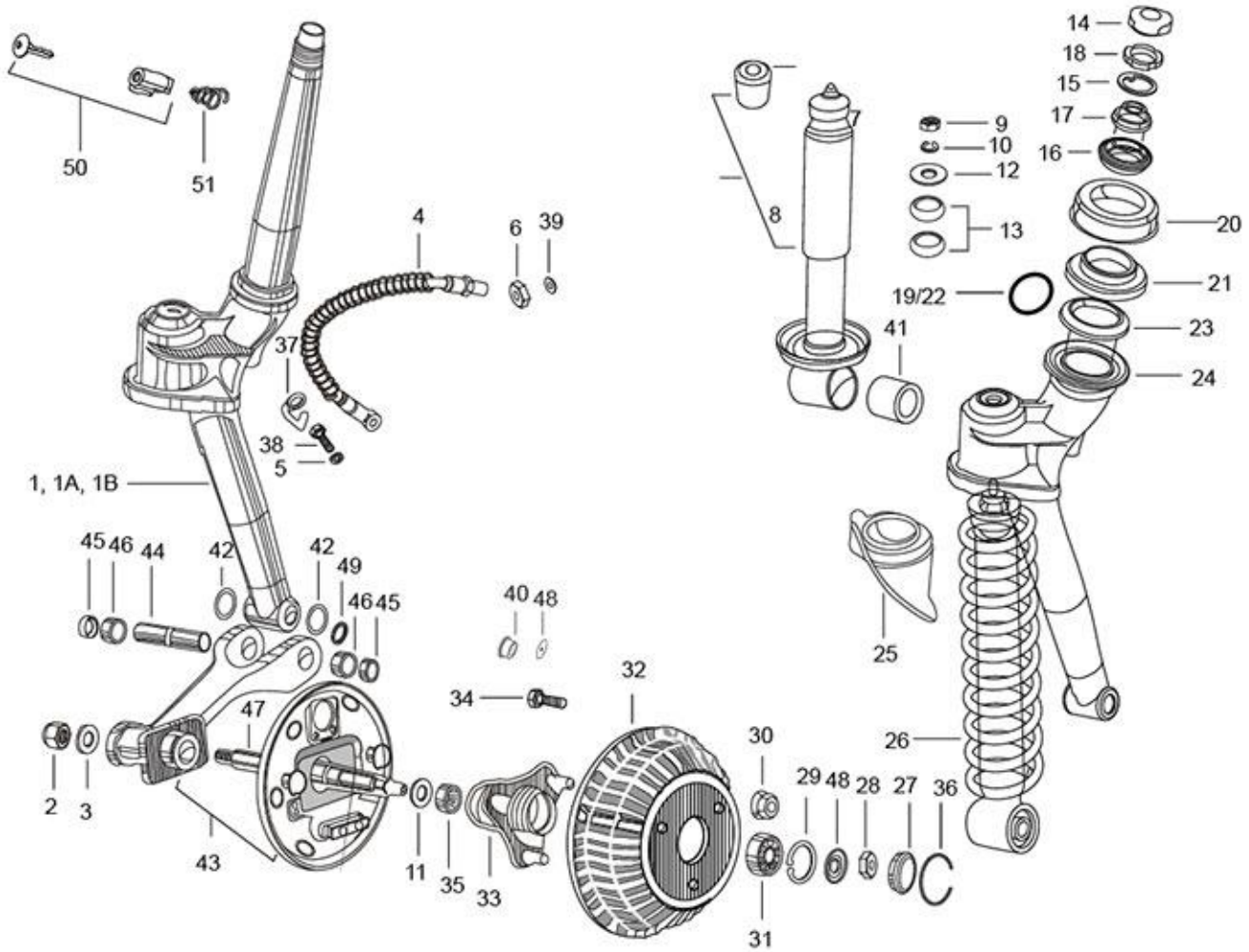
50
51
4
6
39
37
38
5
1, 1A, 1B
45
46
44
42
42
49
46
45
40
48
34
32
47
2
3
43
11
35
33
30
29
48
28
27
36
31
26
25
7
8
9
10
12
13
14
18
15
17
16
20
21
19/22
23
24
41

85

Print Date: 07-Apr-2022

2.08

STEERING COLUMN AND FRONT SUSPENSION

Fig. No.	Part No.	Description	Qty	Remarks
1	B076873SP	STEERING COLUMN ASSLY (NRB) -501 STD SPD	1	
1A	B076859	STEERING COLUMN WITH I.P. (501 STD)	1	
2	568095	NYLOCK NUT	1	
3	87067	PLAIN WASHER 30.5X14.3X2	1	
4	644814R	FLEXIBLE BRAKE HOSE	1	
5	127927R	PACKING	2	
6	21216	HEX NUT M16 X 1.5	4	
7	75708	SILENT BLOCK	1	
8	569246R	FRONT SHOCK ABSORBER	1	Pass. PU
8	632719	SHOCK ABSORBER , FR TYPE	1	LD
9	20110	HEX NUT M10	1	
10	16410	SPRING WASHER	1	
11	136434	OIL SEAL	1	
12	6066	PL WASHER 10.5X38X9	1	
13	157103	BUSH - SHOCK ABSORBER	2	
14	604758	PROTECTION	1	
15	108873	STOP WASHER FOR HOLDING	1	
16	567990	BEARING RACE UPPER BOTTOM	1	
17	567991	BEARING RACE UPPER TOP	1	
18	108874	SECURING RING NUT	1	
19	6C000190	UPPER BALL CAGE (VE)	1	
20	109064	DUST COVER	1	
21	567992	BEARING RACE LOWER TOP	1	
22	6C000191	LOWER BALL CAGE (VE)	1	
23	567993	BEARING RACE LOWER BOTTOM	1	
24	109066	WASHER WITH PROTECTION FOR BEARING	1	
25	109265	SPLASH GUARD DUST COVER	1	
26	569255	FRONT SUSPENSION SPRING	1	
26	616931	FRONT SUSPENSION SPRING	1	LD
27	107871	CAP	1	
28	74521	NUT M14 X 1.5	1	
29	567473	CIRCLIP DIA. 42 INT. (841004203)	1	
30	660931	WHEEL NUT (M12 X 1.5)	3	
31	30209R	BALL BEARING FRONT WHEEL HUB	1	
32	152580	BRAKE DRUM APE - 501	1	

86

Print Date: 07-Apr-2022

2.08

STEERING COLUMN AND FRONT SUSPENSION

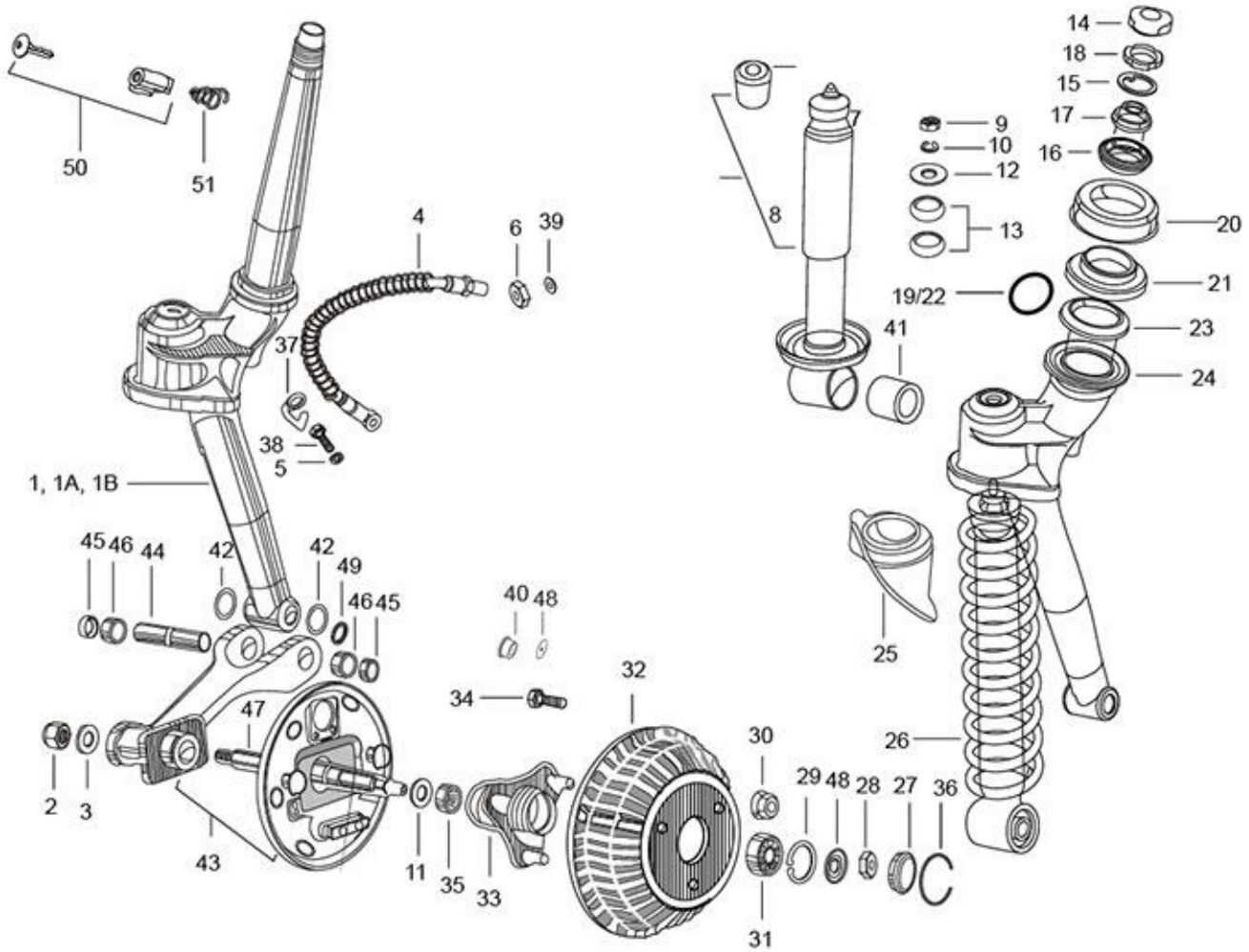
50
51
4
6
39
37
38
5
1, 1A, 1B
45
46
44
42
42
49
46
45
40
48
34
32
47
2
3
43
11
35
33
30
29
48
28
27
36
31
26
25
7
8
9
10
12
13
14
18
15
17
16
20
21
19/22
23
24
41

87

Print Date: 07-Apr-2022

2.08

STEERING COLUMN AND FRONT SUSPENSION

Fig. No.	Part No.	Description	Qty	Remarks
33	652521	FR. WHEEL HUB ASSY.	1	
34	652520	BOLT FOR AXLE M12 X 40 (VE WHEEL RIM)	1	
35	661282	NEEDLE ROLLER BEARING	1	
36	107870	ELASTIC RING	2	
37	B003228	LOCK PLATE FRONT BRAKE HOSE	1	
38	587829	BENJO BOLT	1	
39	48197	PL WASHER 24X16X1.5	3	
40	107732	BUSH FOR SILENT BLOCK	1	
41	109117	RUBBER BUSH (FRT SHOCK ABSORBER) / RING	1	
41	566545	RUBBER BUSH (FRT SHOCK ABSORBER) - MODIFIED	1	
42	6733	O RING	2	
43	616541	BRACKET WHEEL CARRIER WITH PI	1	
44	137235	STEERING PIN	1	
45	8771	OIL SEAL (18-24-4)	2	
46	107718	ROLLER BUSH	2	
47	643772R	FRONT WHEEL AXLE	1	
48	180431	COIN WASHER	1	
49	150579	RING FOR HOLDING TYPE J F101 17A	2	
50	B024732	STG LOCK ASSLY WITH KEY	1	
51	569150	SPRING; STEERING LOCK (MODIFIED)	1	
52	661231	CIRCLIP STEERING LOCK DIA 16 (INT)	1	
53	604759	RUBBER CAP STEERING COLUMN (N.I.)	1	
54	604758	PROTECTION	1	
55	KIT940003R	STEERING PIN KIT WITH O RING	1	
58	KIT96033R	MODIFIED BALL KIT FOR 3WH (WHITE)	1	
59	KIT95021R	STEERING CONE SET (UPPER)	1	
60	KIT95022R	STEERING CONE SET (LOWER)	1	

88

Print Date: 07-Apr-2022

2.09

HANDLE BAR AND CONTROL

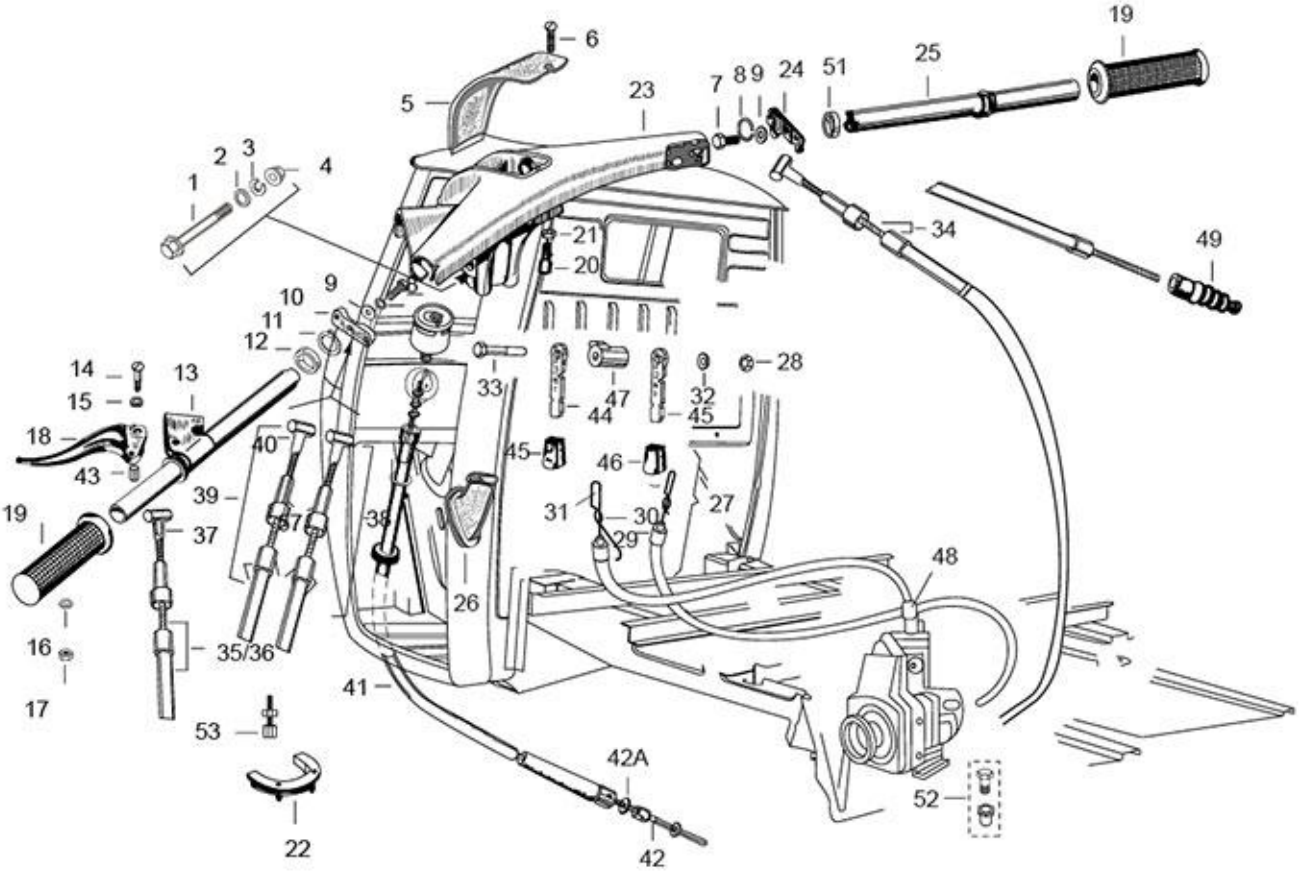
1
2
3
4
5
6
7
8
9
10
11
12
13
14
15
16
17
18
19
20
21
22
23
24
25
26
27
28
29
30
31
32
33
34
35/36
37
38
39
40
41
42
42A
43
44
45
46
47
48
49
51
52
53

89

Print Date: 07-Apr-2022

2.09

HANDLE BAR AND CONTROL

Fig. No.	Part No.	Description	Qty	Remarks
1	30103	HANDLE SECURING BOLT M10 X 70 CL 8.8	1	
2	16626	PLAIN WASHER (18X10.5X2)	2	
3	16410	SPRING WASHER	1	
4	20110	HEX NUT M10	1	
5	B041600	HANDLE BAR COVER	1	
5	B041600	HANDLE BAR COVER	1	
6	632158	CSK HEAD SCREW	1	
7	31089	HEX HEAD SCREW M6X18 CL 8.8	2	
8	016406	SPRING WASHER	2	
9	6125	PLAIN WASHER (14X6.4X1.5)	2	
10	109775	GEAR CONTROL LEVER S/A	1	
11	60565	SPRING WASHER	1	
12	109404	WASHER OF RABBET(41737)	1	
13	127451	TUBE WITH TERMINAL S/A	1	
14	B075313	SCREW FOR CLUTCH LEVER (NEW)	1	
15	16319	BENT SPRING WASHER	1	
16	16620	PLAIN WASHER	1	
17	12138	NYLOCK NUT M6	1	
18	164906	CLUTCH CONTROL LEVER	1	
19	141925	HANDLE	2	
20	197071	ADJUSTER SCREW M6	2	
21	20106	HEX NUT M6	2	
22	126902	PROTECTION COLLAR CABLE	1	
23	B075687	HANDLE (‘T’ TYPE)	1	
24	109635	THROTTLE CONTROL LEVER WITH IP	1	
25	587902	ACCELERATOR TUBE ASSY.	1	
26	109227	PROTECTION GROMMET	1	
27	662567	CHOKE CONTROL CABLE ASSLY.	1	
28	2438	HEX SELF LOCKING NUT	1	
30	B076870R	CHOKE CONTROL CABLE ASSY.	1	For OLD Clutch PASS./PU
30	6A001046R	CLUTCH CONTROL TRANSMISSION ASSLY.	1	For Aluminium Clutch PASS./PU
30	B078533R	CHOKE CONTROL CABLE ASSY. -LD	1	LD
31	NS	NOT SERVICEABLE	1	
32	7608	WASHER	1	
33	30077	HEX HEAD SCREW	1	

90

Print Date: 07-Apr-2022

2.09

HANDLE BAR AND CONTROL

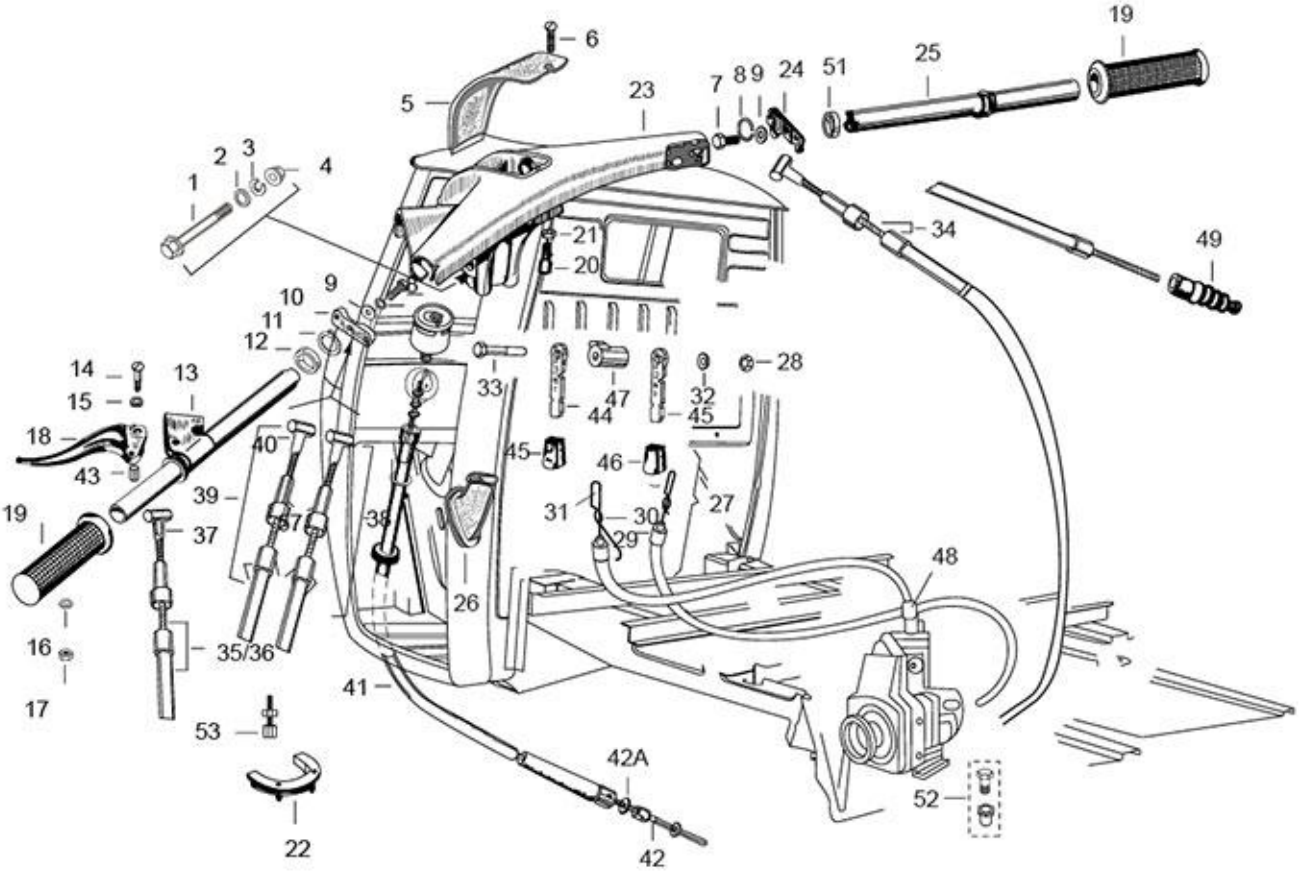
1
2
3
4
5
6
7
8
9
10
11
12
13
14
15
16
17
18
19
20
21
22
23
24
25
26
27
28
29
30
31
32
33
34
35/36
37
38
39
40
41
42
42A
43
44
45
46
47
48
49
51
52
53

91

Print Date: 07-Apr-2022

2.09

HANDLE BAR AND CONTROL

Fig. No.	Part No.	Description	Qty	Remarks
34	B076871R	CABLE ASSY GASOLINE CONTROL	1	PASS. PU
34	B078532R	GASOLINE CONTROL TRANSMISSION ASSLY.	1	
35	B076808R	CLUTCH CONTROL TRANSMISSION ASSLY. 501 LD	1	For OLD Clutch LDX / LDX+
35	6A001047R	CLUTCH CONTROL TRANSMISSION ASS	1	For Aluminium Clutch LDX / LDX+
36	660141	CLUTCH CONTROL CABLE WITH TERMINAL	1	
38	B076329	CABLE, GEAR CONTROL ASSLY (BLACK)	1	PASS. PU
38	B076306	SHIFT CONTROL TRANSMISSION ASSLY NO.1	1	LD
39	B076330	CABLE,GEAR CONTROL ASSLY NO.2(WHITE)	1	LD
39	B076307	SHIFT CONTROL TRANSMISSION ASSLY NO.2	1	
40	587803	WIRE, GEAR CONTROL WITH TERMINAL	2	
40A	20105	PLAIN NUT M5	2	
41	645124	SPEEDO CABLE	1	pass (dx)
41	660340	FLEXIBLE TRANS. FOR ODOMETER CONTROL	1	LDx & LDx+
42	587812	TRANSMISSION CABLE (INNER) FOR ODOMETER	1	pass (dx)
42	659805	FLEXIBLE TRANSMISSION CABLE	1	LDx & LDx+
42A	97756	METALLIC PLAIN WASHER	4	
43	125181	SPACER	1	
44	119928	LEVER	2	
45	632137	KNOB RED (ENGINE STOP)	1	
46	604717	KNOB FOR R.C.	1	
47	119181	SPACER	1	
48	119278	TERMINAL	1	
49	118806	PROTECTION BELLOW	2	
50	15478	GROMMET4	2	
51	587904	SINTERED WASHER HANDLE BAR (41769)	1	
52	B024379	SCREW TERMINAL ASSLY-ENGINE STOP,D.C.	1	
53	B024774	SLEEVE FOR ACC. AND CHOKE CABLE	2	NI
54	B024775	SLEEVE	2	NI

92

Print Date: 07-Apr-2022

2.10

BRAKE - TANDEM MASTER CYLINDER, BRAKE PIPE AND HAND BRAKES

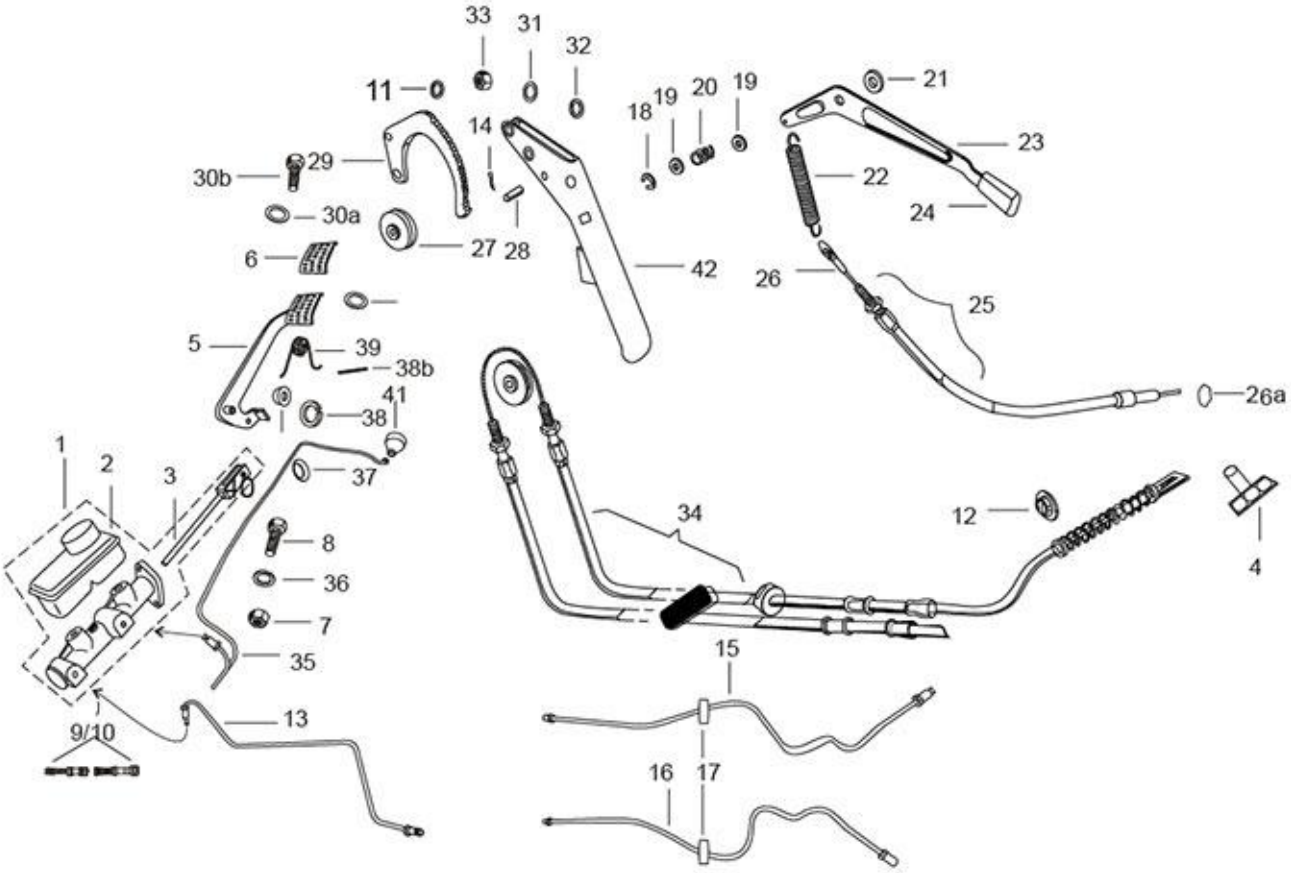
33
31
32
11
21
18
19
20
19
14
23
30b
29
22
24
30a
27
28
6
42
26
25
5
39
38b
41
26a
38
1
2
3
37
34
12
4
8
36
7
35
15
13
9/10
16
17

93

Print Date: 07-Apr-2022

2.10

BRAKE - TANDEM MASTER CYLINDER, BRAKE PIPE AND HAND BRAKES

Fig. No.	Part No.	Description	Qty	Remarks
1	604880	TANDEM MASTER CYLINDER ASSLY.	1	
2	604877	BRAKE OIL TANK	1	
3	587702	PUSH ROD	1	
4	119278	TERMINAL	1	
5	604760	BRAKE PEDAL WITH FOOT REST ASSLY	1	
6	567461	RUBBER PROTECTION FOR PEDAL	1	
7	20108	HEX NUT M8	2	
8	31122	HEX HD. SCREW M8X30 CL 8.8	2	
8	016408	SPRING WASHER	2	
9	925508	MAJOR KIT TMC (KBX 1008)	1	
10	925509	MINOR KIT TMC (KBX 1009)	1	
11	016408	SPRING WASHER	1	
12	604502	CUP RETAINING SPRING (41733)	2	
13	B075852	BRAKE TUBE FOR REAR WHEEL	1	
14	12761	SPLIT PIN	1	
15	644813	BRAKE PUMP TUBE OF LEFT REAR WHEEL	1	
16	644812	BRAKE PUMP TUBE OF RIGHT REAR WHEEL	1	
18	5969	CIRCLIP DIA 9 E TYPE	1	
19	6173	METALLIC PLAIN WASHER (808001026)	1	
20	108785	SPRING	1	
21	B042317	SPACER-RC LEVER	1	
22	567690	REVERSE GEAR COUPLING SPRING	1	
23	125411	BACKING COMMAND LEVER	1	
24	604717	KNOB FOR R.C.	1	
25	587633	CABLE, REVERSE GEAR CONTROL ASSY.	1	pass (dx)
25	660356	REVERSE GEAR TRANS. CABLE	1	LDx & LDx+
26	587822	CABLE, REVERSE GEAR WITH TERMINALS.	1	pass (dx)
26	660358	CABLE REVERSE GEAR WITH TERMINAL	1	LDx & LDx+
26A	20105	PLAIN NUT M5	2	
27	567898	PULLEY FOR HAND BRAKE	1	
28	567899	CLEVIS PIN	1	
29	B042794	RATCHET , HAND BRAKE CONTROL	1	
30A	140728	PLAIN WASHER 8.5 X 24 X 3	6	
30B	31118	SCREW M8X20	1	
31	6173	METALLIC PLAIN WASHER (808001026)	1	

94

Print Date: 07-Apr-2022

2.10

BRAKE - TANDEM MASTER CYLINDER, BRAKE PIPE AND HAND BRAKES

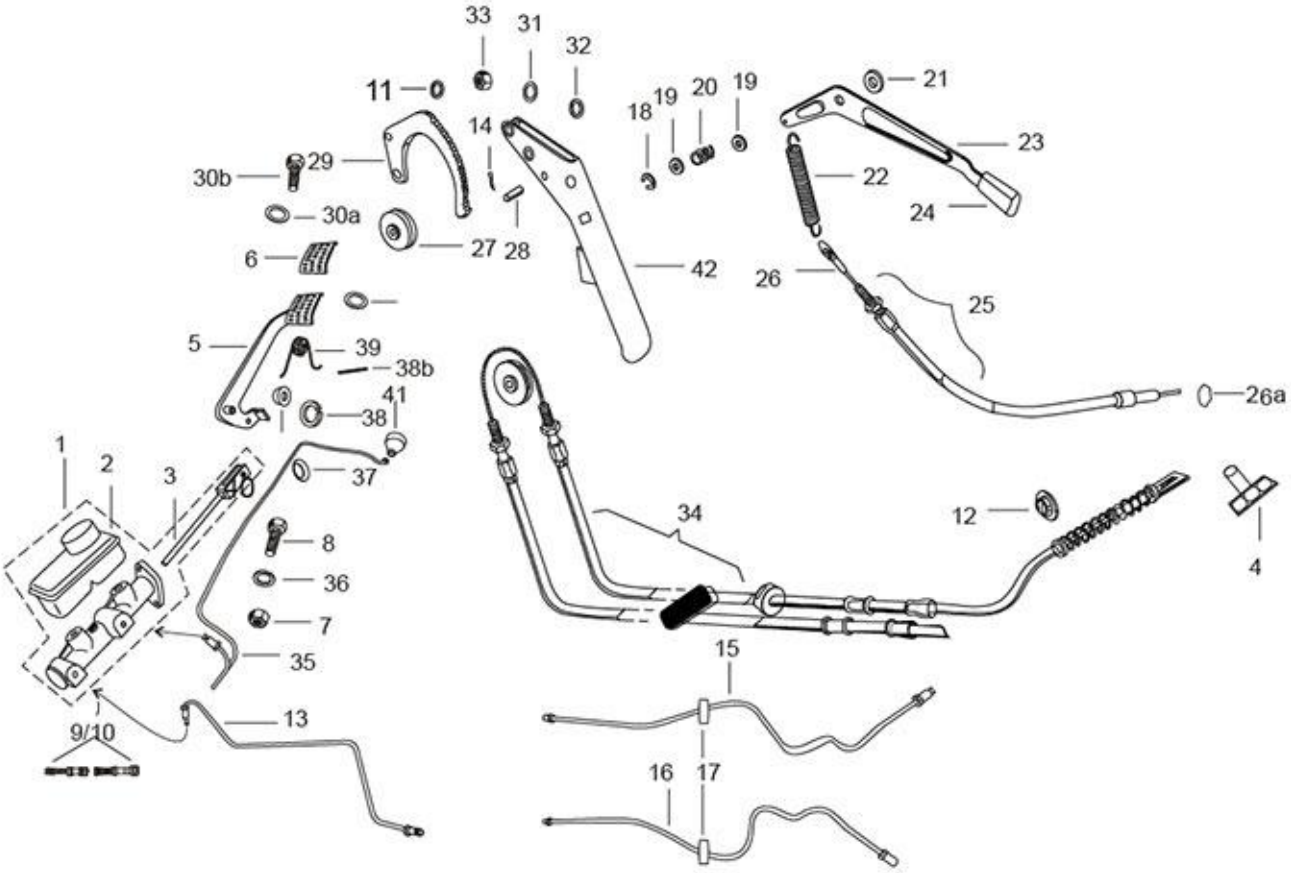
33
31
32
11
14
18
19
20
19
21
23
22
24
30b
29
30a
27
28
6
42
26
25
5
39
38b
41
38
26a
1
2
3
37
34
12
4
8
36
7
35
15
13
9/10
16
17

95

Print Date: 07-Apr-2022

2.10

BRAKE - TANDEM MASTER CYLINDER, BRAKE PIPE AND HAND BRAKES

Fig. No.	Part No.	Description	Qty	Remarks
31A	13812	METALLIC PLAIN WASHER	1	
32	6411	EXT CIRCLIP DIA 11	1	
33	20108	HEX NUT M8	1	
34	567719	CABLE,HAND BRAKE CONTROL ASSLY	1	
35	568161	TUBE BETWEEN TMC & FRT WHEEL	1	
36	016408	SPRING WASHER	2	
37	842001507	CIRCLIP DIA 15 (EXT)	1	
38	843000809	CIRCLIP DIA.8(EXT) TYPE C	1	
38A	567920	SPLIT PIN	1	
38A	568737	SPLIT PIN 4 X 25 (821 0425 2 2)	1	
38B	3058	PLAIN WASHER 15X8.4X1.5	1	
39	587928	FOOT BRAKE PEDAL SPRING	1	
40	229524	WASHER 21X14.3X2	1	
41	138237	CAP	1	
42	567746G1	HAND BRAKE LEVER (WITH POWDER COATING)	1	

96

Print Date: 07-Apr-2022

2.11

FRONT MUDGUARD & HEAD LAMP ASSY.

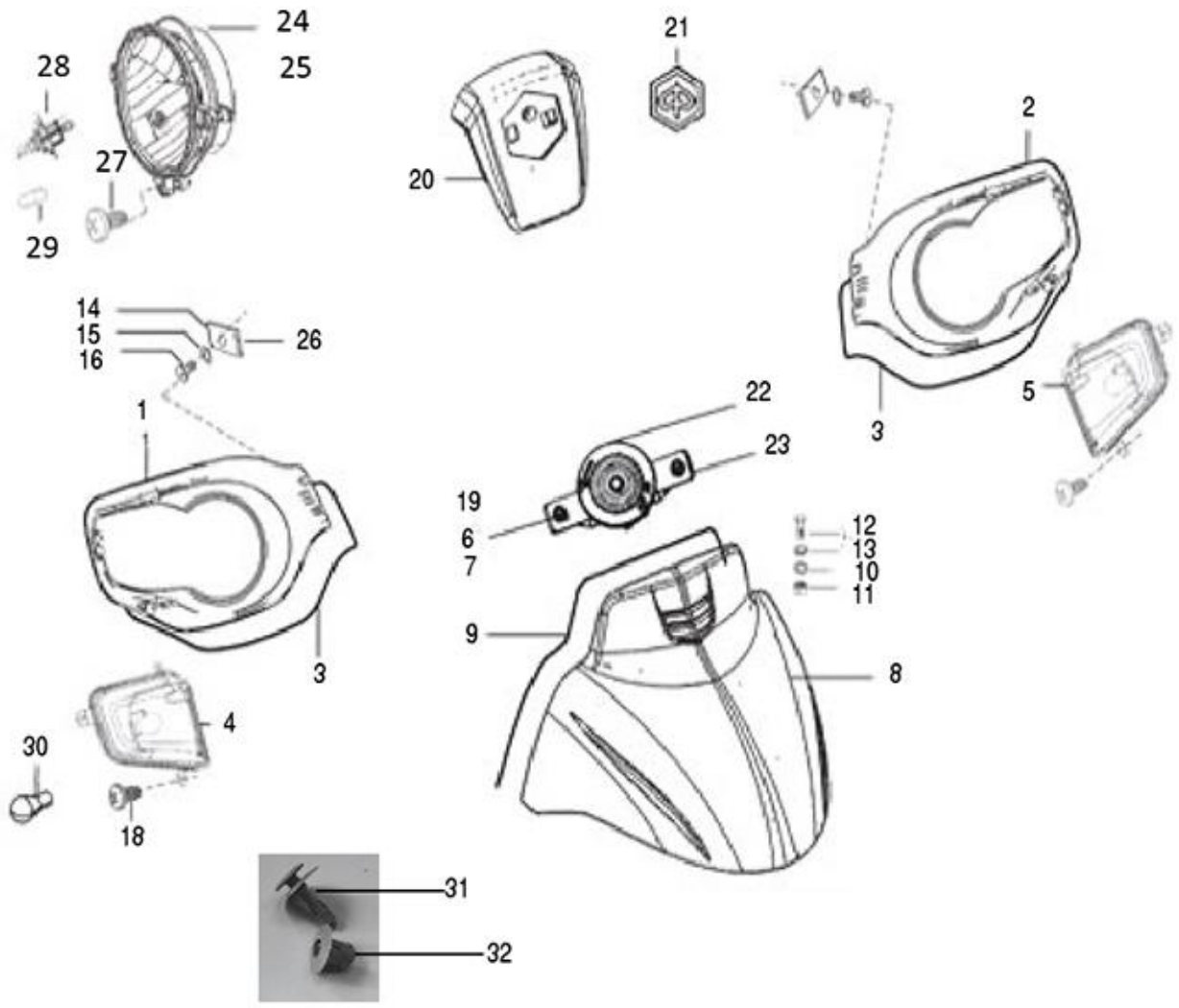
24
25
28
27
29
21
20
2
14
15
16
26
1
22
23
5
3
19
6
7
12
13
10
11
9
8
3
4
30
18
31
32

97

Print Date: 07-Apr-2022

2.11

FRONT MUDGUARD & HEAD LAMP ASSY.

Fig. No.	Part No.	Description	Qty	Remarks
1	B075999	HEAD LAMP COVER LH	1	E - Marked (Export)
2	B076000	HEAD LAMP COVER RH	1	E - Marked (Export)
3	B076191	HL BEZEL BEADING	2	
4	6D000145R	FRONT DIRECTION INDICATORS LH	1	E - Marked (Export)
5	6D000146R	FRONT DIRECTION INDICATORS RH	1	E - Marked (Export)
7	261323	NUT	4	
8	B075974	FRONT MUDGUARD	1	
9	B076801	FRONT MUDGUARD RUBBER BEADING	1	
9	B076802	FRONT MUDGUARD PARTITION RUBBER BEADING	1	
10	013880	PLAIN WASHER	8	
11	20106	HEX NUT M6	4	
12	31089	HEX HEAD SCREW M6X18 CL 8.8	4	
13	78307	BENT SPRING WASHER M6	4	
14	8080	SPRING PLATE	4	
15	3055	PLAIN WASHER M5	10	
16	660168	PAN SELF TP. SCREW 10 SGX13AB	5	
17	157716	SCREW ANCHORE	8	
18	B074539	PHILIPS COUNTER HEAD SCREW	4	
19	016406	SPRING WASHER	4	
20	B076001	LOGO SUPPORT_CITY UPGRADE	1	
21	B076120	HEXAGONAL EMBLEM	1	
22	B074033	HORN ASSLY(DIA 70)	1	E - Marked (Export)
23	B073953	HORN MTG. BKT S/A	1	
24	6D000143R	HEAD LAMP ASSLY LH - NUOVO	1	E - Marked (Export)
25	6D000144R	HEAD LAMP ASSLY - RH (NUOVO)	1	E - Marked (Export)
26	119735	PROTECTION SECURING SPRING/SPR. FOR PROTECTION	2	
27	15900	HEAD LAMP SECURING SCREW/PAN SELF TAP SCREW	6	
28	B078286R	HS1_BULB (12 V _35/35W	2	
29	567593	BULB 12V 5W / LAMP 4W	2	
30	925581	INDICATOR LIGHT BULB 12V 21W AMBER COLOUR	2	
31	B076606	GROMMET	1	
32	B076605	PIN	1	

98

Print Date: 07-Apr-2022

2.12
ELECTRICAL DEVICES

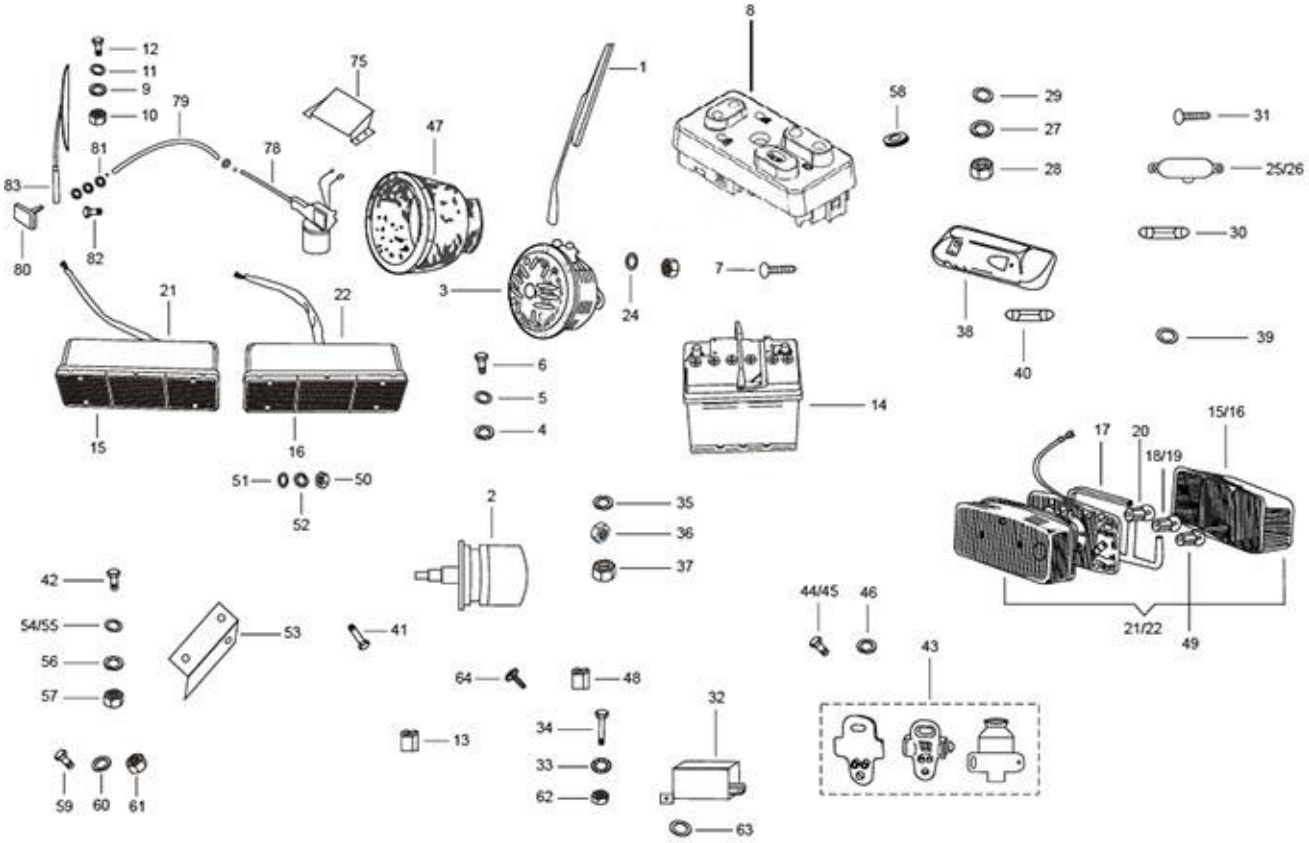
12
11
9
10
79
75
47
1
8
58
29
27
28
31
25/26
30
81
78
83
80
82
3
24
7
38
40
39
21
22
6
5
4
14
15
16
51
50
52
2
35
36
37
17
20
18/19
15/16
21/22
49
42
54/55
56
57
53
41
44/45
46
43
64
48
13
34
33
62
32
63
59
60
61

99

Print Date: 07-Apr-2022

2.12

ELECTRICAL DEVICES

Fig. No.	Part No.	Description	Qty	Remarks
1	632292	WIPER ARM & BLADE ASSY	1	
2	632995	WIPER MOTOR ASSY. WITH MTG. BKT.	1	
2	B076574	WIPER MOTOR ASSY. WITH MTG. BKT. (N.I.)	1	
3	B04100R	HORN 3 WH _ E MARK	1	
4	016408	SPRING WASHER	1	
5	3058	PLAIN WASHER 15X8.4X1.5	1	
6	31116	HEX HD. SCREW M8X16	1	
7	15640	SCREW SECURING SWITCH	1	
8	B073850R	HBS (ST. BUTTON) - CITY UPGRADE (NEW) _ALL NUOVO MODEL	1	FOR PUSH BUTTON_HBS
9	016406	SPRING WASHER	6	
10	20106	HEX NUT M6	6	
11	3056	PLAIN WASHER M6 OD12	6	
12	31088	HEX HD SCREW M6 X 16 CL 8.8 (811061623)	6	
13	604557	FUSE (10A)	6	
14	6D000015R	BATTERY	1	
15	920083	TAIL LAMP LENSE LH WITH HARDWARE & GASKET	13	
16	920084	TAIL LAMP LENSE RH WITH HARDWARE & GASKET	1	
17	925212	PACKING	1	
18	181746	INDICATOR BULB 12V 10W	2	
19	925581	INDICATOR LIGHT BULB 12V 21W AMBER COLOUR	2	
20	567700	BULB 10/5W (STOP LIGHT)	2	
21	643704R	TAIL LAMP ASSY. LH	1	E - Marked (Export)
22	643705R	TAIL LAMP ASSY. RH	1	E - Marked (Export)
23	925571	CABLE RACK (033200/PGO)	1	
24	016408	SPRING WASHER	1	
26	643616	CABIN LAMP (N.I.)	1	
27	016406	SPRING WASHER	2	
28	20106	HEX NUT M6	2	
29	3056	PLAIN WASHER M6 OD12	2	
30	71633	STOP AND PARKING BULB 12V 10/5 W	1	
31	15727	PAN SELF TAPPING SCREW	2	
32	B023727R	CONTACTOR	1	
33	12546	PLAIN WASHER / MULTI TOOTH LOCK WASHER M5	2	
34	31057	HEX HEAD SCREW M5 X 14 CL 8.8	2	
35	3055	PLAIN WASHER M5	2	

100

Print Date: 07-Apr-2022

2.12
ELECTRICAL DEVICES

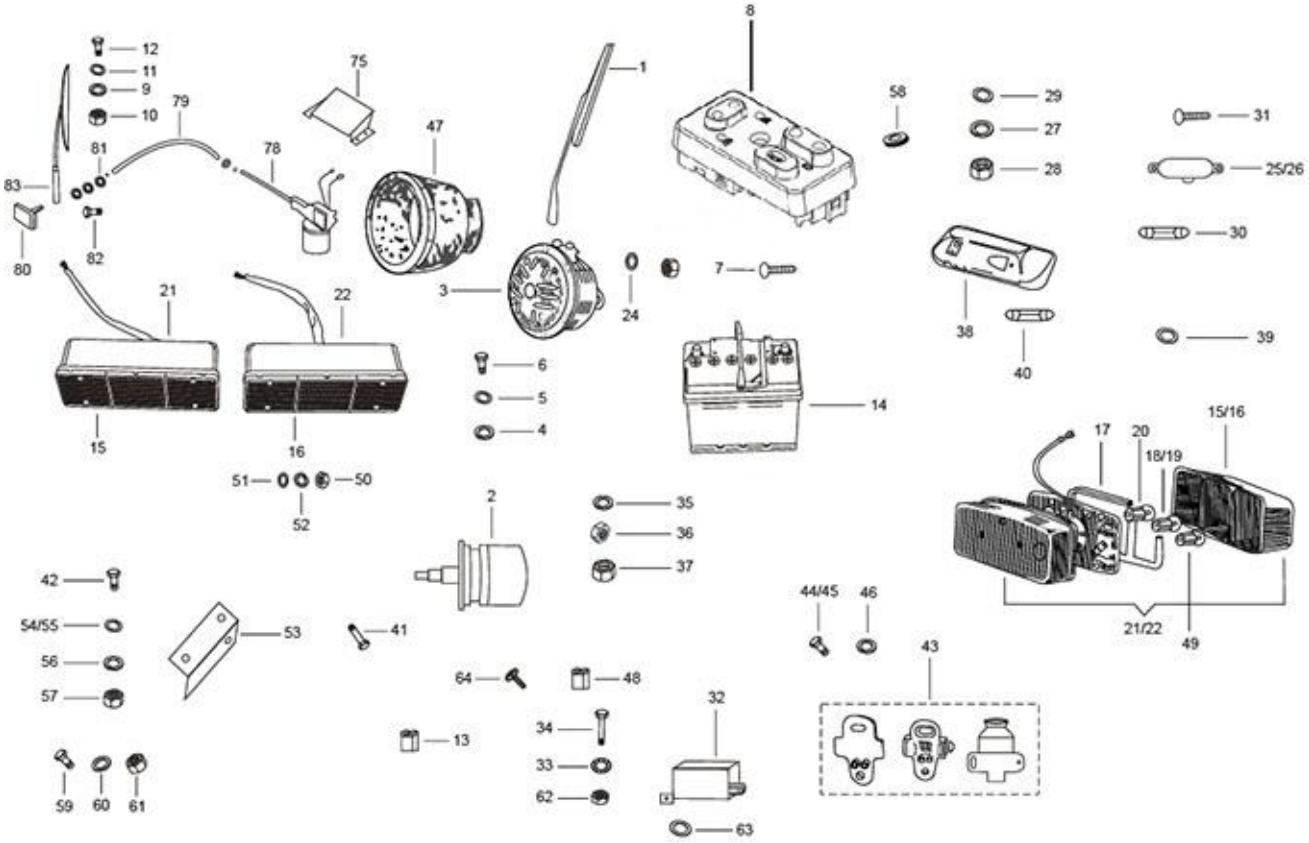
12
11
9
10
79
75
47
1
8
58
29
27
28
31
25/26
30
81
78
83
80
82
3
24
7
38
40
39
21
22
6
5
4
14
15
16
51
50
52
2
35
36
37
17
20
18/19
15/16
21/22
49
42
54/55
56
57
53
41
44/45
46
43
64
48
13
34
33
62
32
63
59
60
61

101

Print Date: 07-Apr-2022

2.12

ELECTRICAL DEVICES

Fig. No.	Part No.	Description	Qty	Remarks
36	20105	PLAIN NUT M5	2	
37	20108	HEX NUT M8	1	
38	150915R	REGISTRATION PLATE LAMP ASSY	1	E - Marked (Export)
39	12536	SPRING WASHER	1	
40	71633	STOP AND PARKING BULB 12V 10/5 W	1	
41	8451	PAN SELF TP SCREW 6 SGX13 AB	2	
42	31058	HEX HEAD SCREW M5 X 16 CC8.8	2	
43	567498R	BRAKE/REVERSE LIGHT SW (INTEGRAL CAP)-PAV	1	
44	568750	PLAIN RDHD SCREW M4 X 16	2	
45	15996	PHIL RD HD SCREW M4X12	2	
46	003054	PLAIN WASHER	2	
47	645041	HORN PROTECTION	1	
48	567706	FUSE 30 A	1	
49	181747	REVERSE LAMP BULB 12V 5W	2	
50	12136	NUT / NYLOCK NUT M5	2	
51	6078	PLAIN WASHER 12 X 5.2 X 1	2	
52	16405	SPRING WASHER M5	2	
53	660109	FUSE BOX BKT	1	
54	3055	PLAIN WASHER M5	4	
55	6078	PLAIN WASHER 12 X 5.2 X 1	4	
56	6965	SPRING WASHER DIA 5	2	
57	20105	PLAIN NUT M5	2	
58	77055	RING	1	
59	31056	HEX HEAD SCREW M5 X 12 CL. 8.8	2	
60	6965	SPRING WASHER DIA 5	2	
61	20105	PLAIN NUT M5	1	
62	20105	PLAIN NUT M5	1	
63	3055	PLAIN WASHER M5	1	
64	15911	PAN SELF TAP SCREW 8SG X 16 AB	1	
65	925567	GEAR PLATE ASSLY (034500/4)	1	
66	569165	DOME NUT	1	
67	B009290	STRAP ASSY.	1	
68	568714	BATTERY COVER	1	
69	661231	CIRCLIP STEERING LOCK DIA 16 (INT)	1	
70	925584	BULB 12 V 21W CLEAR (PARKING AND INDICATOR)	1	

102

Print Date: 07-Apr-2022

2.12
ELECTRICAL DEVICES

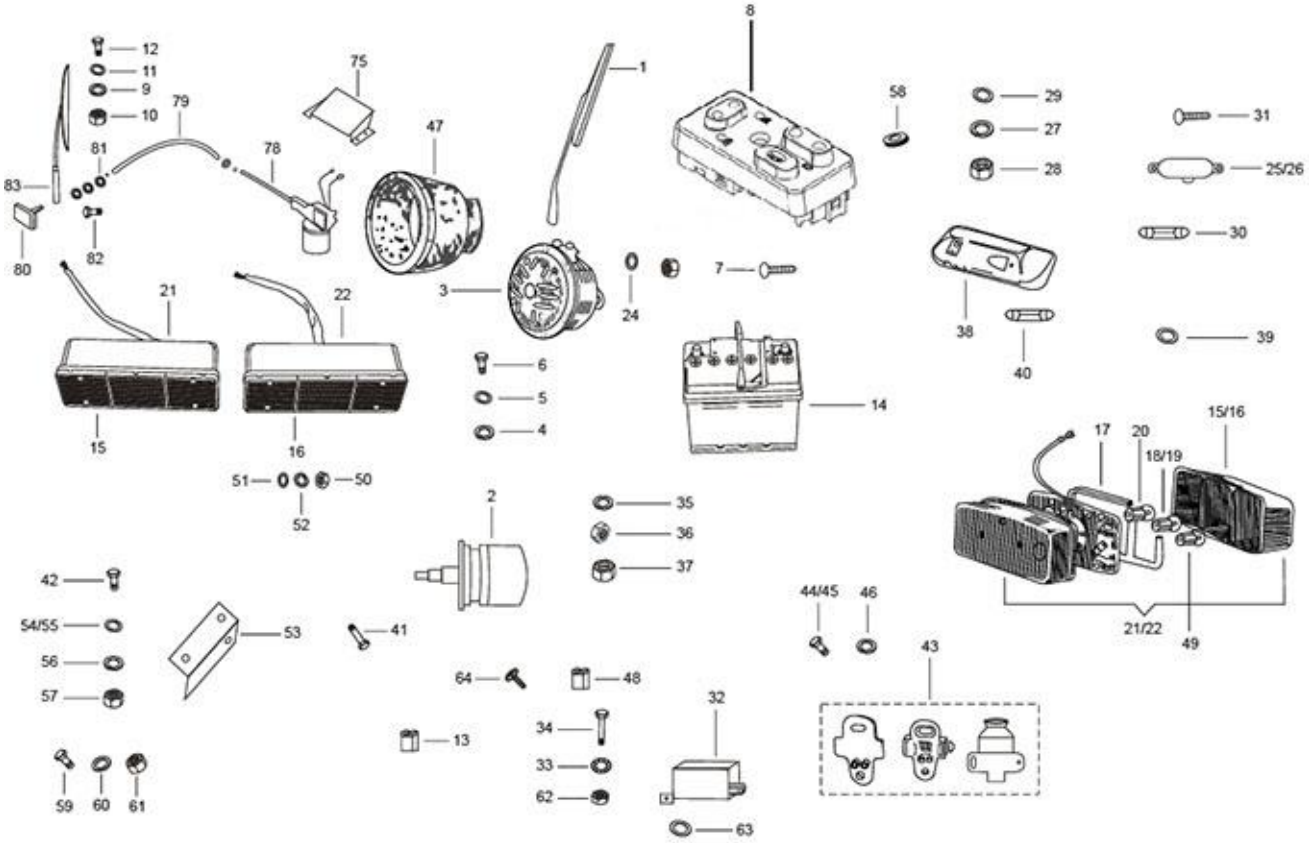
12
11
9
10
79
81
83
80
82
78
75
47
1
8
58
29
27
28
31
25/26
30
3
24
7
21
22
38
40
39
6
5
4
14
15
16
17
20
18/19
15/16
51
50
52
2
35
36
37
42
54/55
56
57
53
41
44/45
46
43
21/22
49
64
48
13
34
33
62
32
63
59
60
61

103

Print Date: 07-Apr-2022

2.12

ELECTRICAL DEVICES

Fig. No.	Part No.	Description	Qty	Remarks
71	925585	LENS MOUNTING SCREW FOR LATERAL LAMP - NEOLITE MAKE	1	
72	925589	LENSE MOUNTING SCREW (N.I.)	1	
73	925605	TAIL LAMP GLASS - RH (LUMAX)	1	
74	925604	TAIL LAMP GLASS - LH (LUMAX)	1	
75	569166	WIPER MOTOR MOUNTING BRACKET	1	
76	632995	WIPER MOTOR ASSY. WITH MTG. BKT.	1	
77	604506	BUNDY TUBE OUTER	1	
78	632285	BUNDY TUBE (MOTOR TO WHEEL BOX)	1	
79	604506	BUNDY TUBE OUTER	1	
79	B076573	BUNDY TUBE (MOTOR TO WHEEL BOX)	1	
80	569197	WHEEL BOX ASSY. (MOD.)	1	
80	B076304	WHEEL BOX ASSY. (MOD.)	1	
81	003054	PLAIN WASHER	2	
82	661925	PHILIP PAN HEAD SCREW (M5 X 0.8 X 1.6)	4	
83	925572	BRUSH CARD ASSLY (033300/PGO)	1	

104

Print Date: 07-Apr-2022

2.13

PASSENGER AUTO RICKSHAW BODY

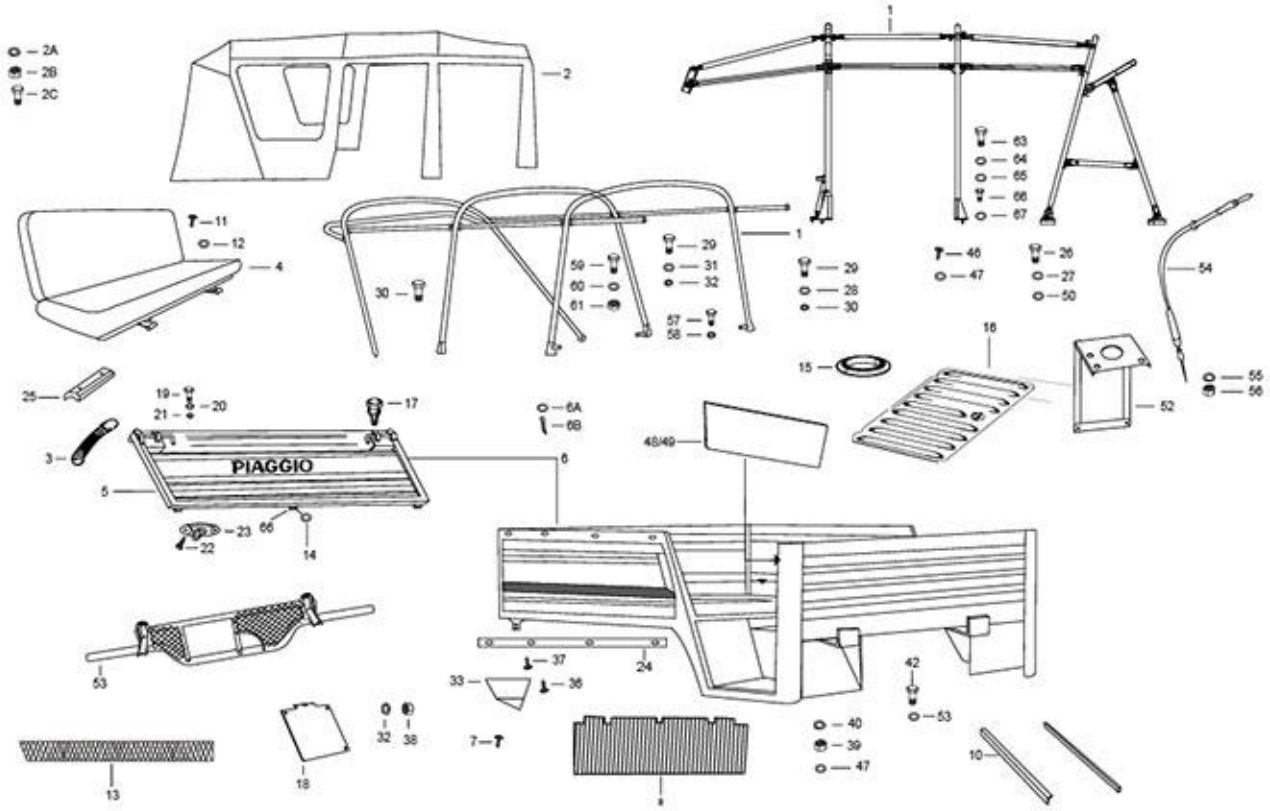
2A
2B
2C
2
1
63
64
65
66
67
11
12
4
29
31
32
1
29
28
30
46
47
26
27
50
54
30
59
60
61
57
58
16
15
55
56
52
25
19
21
20
17
6A
6B
3
PIAGGIO
6
46/49
5
23
66
22
14
53
37
24
33
36
42
53
32
38
7
40
39
47
10
13
18
9

105

Print Date: 07-Apr-2022

2.13

PASSENGER AUTO RICKSHAW BODY

Fig. No.	Part No.	Description	Qty	Remarks
1	KIT96037R	KIT HOOD FRAME ASSLY _501 CNG/LPG WG	1	
2	6B000119	SOFT TOP ASSLY. (501 -WATERCOOLE) _YELLOW	1	
2	6B000121	SOFT TOP ASSLY BLACK 501 WATER COOLED	1	
2A	016408	SPRING WASHER	8	
2B	20108	HEX NUT M8	4	
2C	31116	HEX HD. SCREW M8X16	4	
3	587907	BELT,PASSENGER SEAT RETAINER	2	
4	B075444	PASS. SEAT ASSLY (WIRE MESH)	1	
5	B042726ED	REAR HATCH WITH LATCH BOLT PASS DTL-CED	1	
6	B079129BW	PASS.BODY WITH TAILGATE CNG/LPG DTL_WC_BW	1	
6	B079129CB	PASS.BODY WITH TAILGATE CNG/LPG DTL_WC_CB	1	
6	B079129CO	PASS.BODY WITH TAILGATE CNG/LPG DTL_WC_CO	1	
6	B079129GY	PASS.BODY WITH TAILGATE CNG/LPG DTL_WC_GY	1	
6	B079129EG	PASS.BODY WITH TAILGATE CNG/LPG DTL_WC_GY	1	
6A	3057	PL. WASHER 13 X 7 X 1	1	
7	9000	SELF TAP SCREW 4 SG X 13 AB3	6	
8	661493	PASSENGER COMPARTMENT CARPET (UPGRADE)	1	
9	013880	PLAIN WASHER	4	
10	587962	PROFILE	2	
11	15996	PHIL RD HD SCREW M4X12	8	
12	003054	PLAIN WASHER	16	
13	661262	YELLOW REFLECTIVE TAPE	1	
14	12138	NYLOCK NUT M6	4	
15	B024501	PLASTIC COVER PLUG-CARGO	1	
16	660207ED	ENGINE INSPECTION DOOR 501 CNG/LPG	1	
17	567732	BUFFER	2	
18	643661	LICENSE PLATE MTG. BKT.	1	
19	31119	HEX HD SCREW M8 X 25	2	
20	3058	PLAIN WASHER 15X8.4X1.5	2	
21	016408	SPRING WASHER	2	
22	8432	SCREW	14	
23	587948	BKT. FOR HANDLE (N.I.)	7	
24	643752	LATERAL PROFILE FOR COVER	1	
25	B077358	STOP BUFFER	4	
26	31118	SCREW M8X20	4	

106

Print Date: 07-Apr-2022

2.13

PASSENGER AUTO RICKSHAW BODY

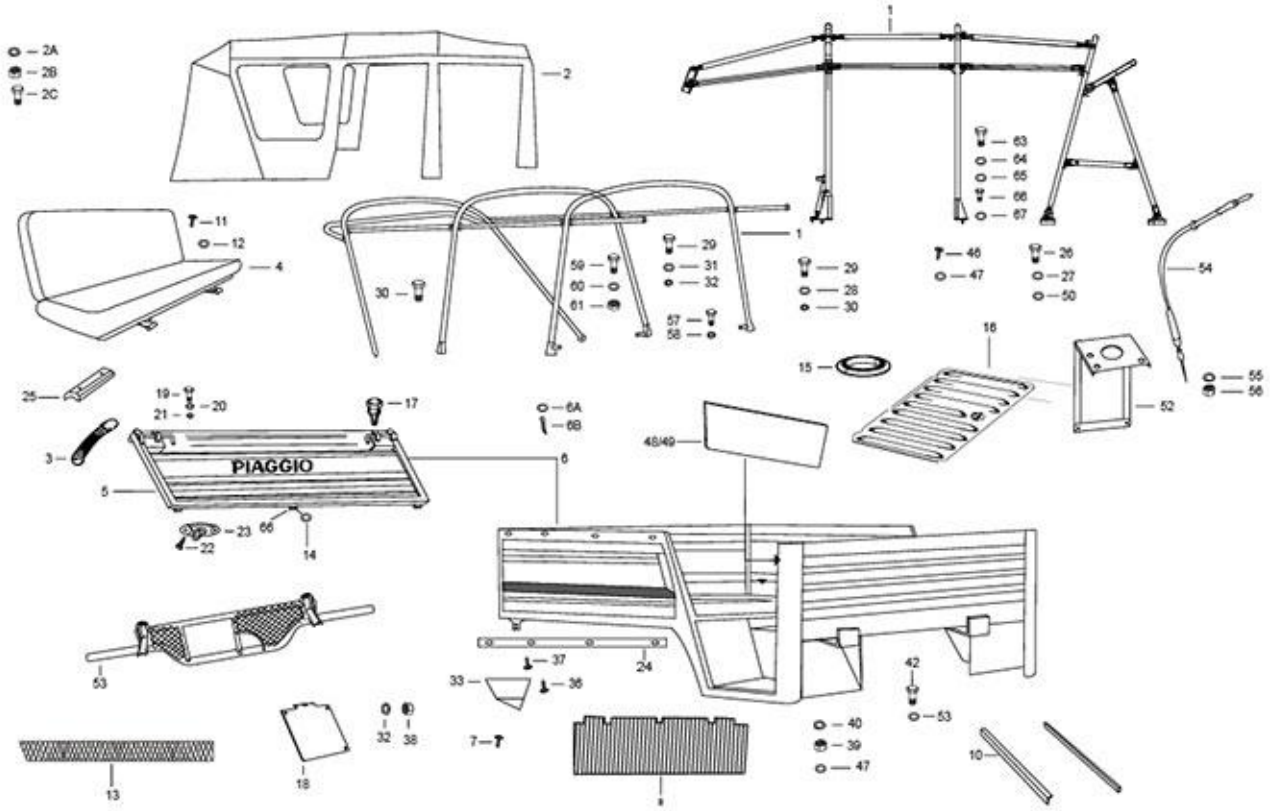
PIAGGIO

107

Print Date: 07-Apr-2022

2.13

PASSENGER AUTO RICKSHAW BODY

Fig. No.	Part No.	Description	Qty	Remarks
27	3058	PLAIN WASHER 15X8.4X1.5	4	
28	016408	SPRING WASHER	4	
29	31088	HEX HD SCREW M6 X 16 CL 8.8 (811061623)	14	
30	031090	HEXAGONAL SCREW	2	
31	3056	PLAIN WASHER M6 OD12	32	
32	016406	SPRING WASHER	18	
33	B073274	REAR PANEL RH (PLASTIC)	1	
34	20106	HEX NUT M6	1	
35	B073275	REAR PANEL LH (PLASTIC)	1	
36	15911	PAN SELF TAP SCREW 8SG X 16 AB	12	
37	14628	CSK SELF TP.SCREW 6SG X 16 AB	28	
38	20106	HEX NUT M6	2	
39	20104	HEX NUT M4	8	
40	016404	SPRING WASHER M4	8	
41	B008400	LOCK SET WITH KEYS (PASSENGER) (N.I.)	1	
42	15900	HEAD LAMP SECURING SCREW/PAN SELF TAP SCREW	8	
43	3056	PLAIN WASHER M6 OD12	4	
44	31092	HEX. HD SCREW M6X25	4	
45	20108	HEX NUT M8	2	
46	15911	PAN SELF TAP SCREW 8SG X 16 AB	8	
47	16670	PLAIN WASHER 12X4.5X1	8	
48	567534	RIGHT FABRIC PROTECTION	1	
49	567535	LEFT FABRIC PROTECTION	1	
50	16670	PLAIN WASHER 12X4.5X1	8	
51	B009701	PASS. SPACE REAR CARPET (V.E)	1	
52	568325	SUPPORT PLATE S/A FAREMETER	1	
53	B077327PC	VISUAL BARRIER	1	
53	6B000189	REAR VISUAL BARRIER ASSLY	1	501 WC 6 feet
54	568107	FAREMETER CABLE ASSY (N.I.)	1	
55	016408	SPRING WASHER	2	
56	20108	HEX NUT M8	4	
57	30074	HEX HEAD BOLT M8 X 40 CL 8.8	2	
58	016408	SPRING WASHER	2	
59	31116	HEX HD. SCREW M8X16	2	
60	016408	SPRING WASHER	2	

108

Print Date: 07-Apr-2022

2.13

PASSENGER AUTO RICKSHAW BODY

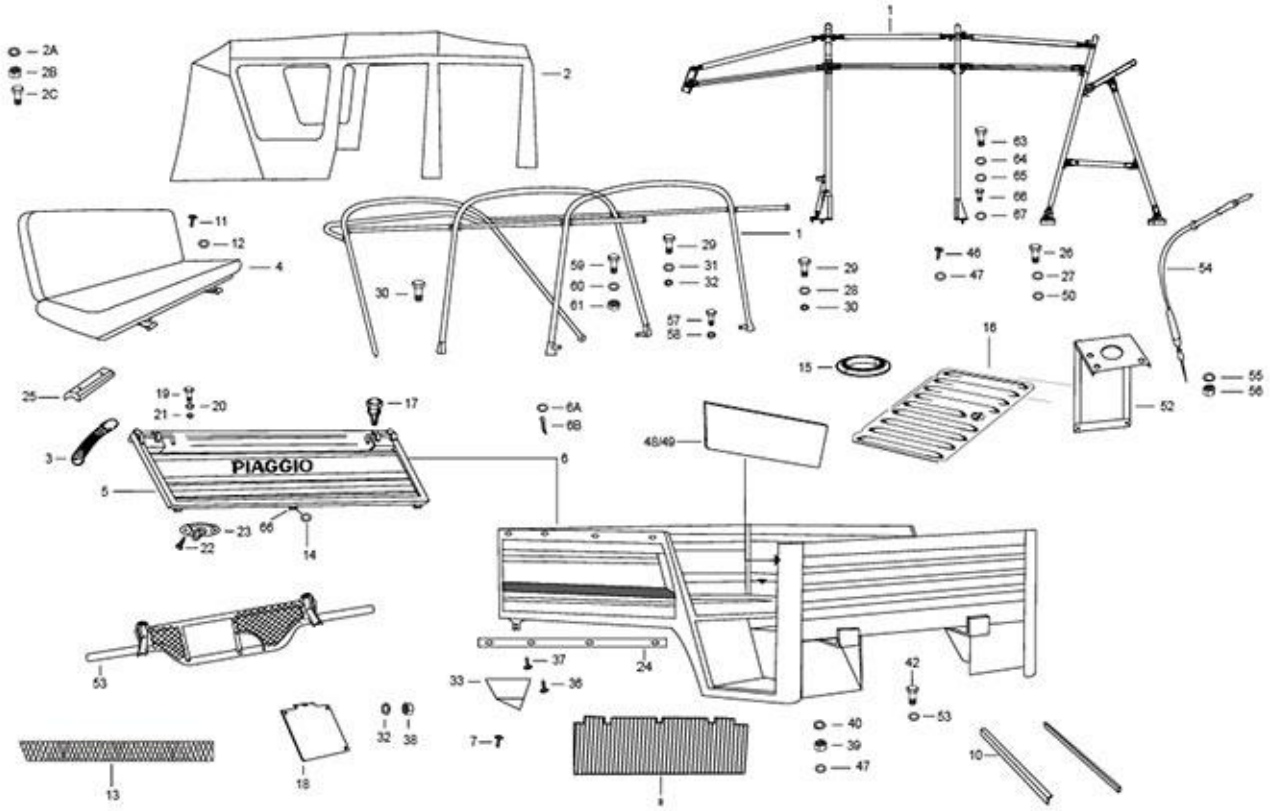
PIAGGIO

109

Print Date: 07-Apr-2022

2.13

PASSENGER AUTO RICKSHAW BODY

Fig. No.	Part No.	Description	Qty	Remarks
61	20108	HEX NUT M8	2	
62	30074	HEX HEAD BOLT M8 X 40 CL 8.8	2	
63	14628	CSK SELF TP.SCREW 6SG X 16 AB	28	
64	3058	PLAIN WASHER 15X8.4X1.5	2	
65	568135	WASHER(NI PLATED)	10	
66	8432	SCREW	49	
67	97756	METALLIC PLAIN WASHER	39	
68	31089	HEX HEAD SCREW M6X18 CL 8.8	2	
69	B009701	PASS. SPACE REAR CARPET (V.E)	1	NI

110

Print Date: 07-Apr-2022

2.14
OPEN BOX BODY

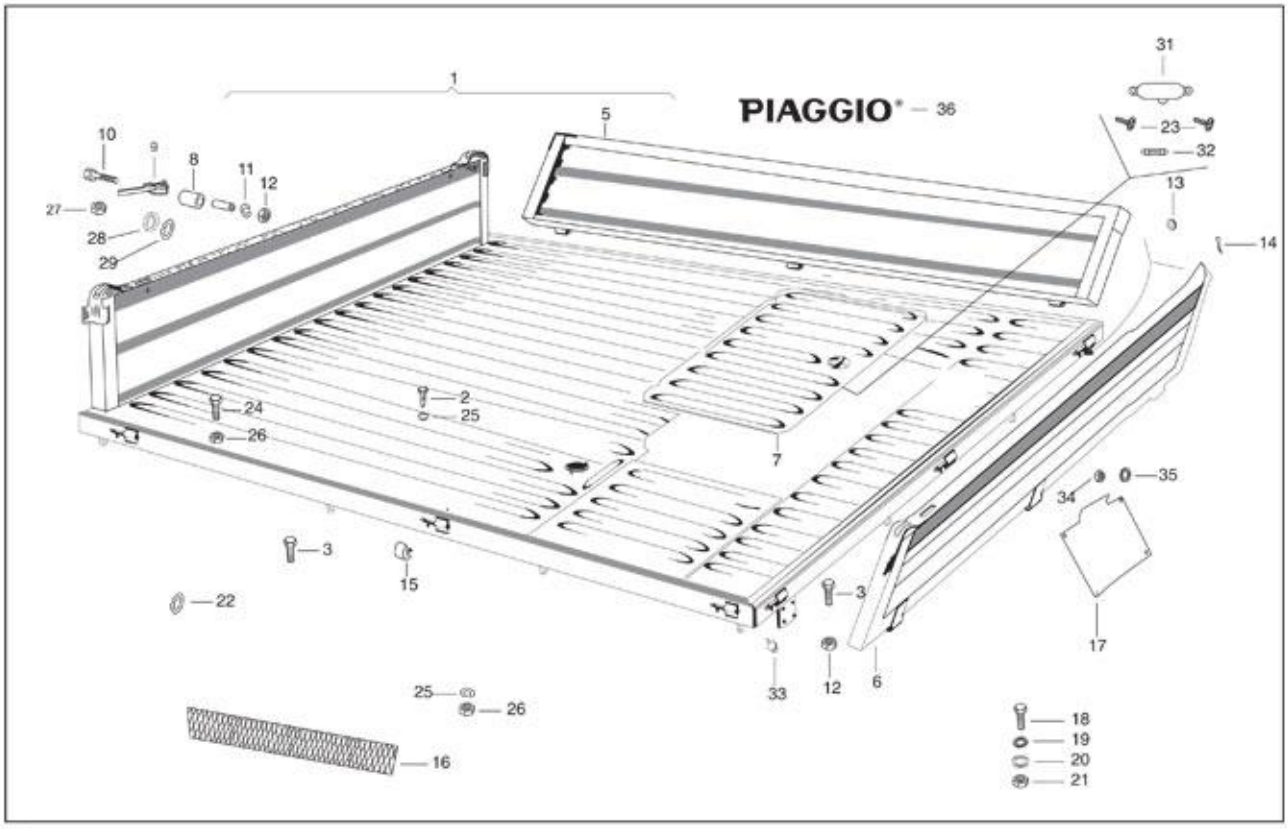
PIAGGIO
1
2
3
5
6
7
8
9
10
11
12
13
14
15
16
17
18
19
20
21
22
23
24
25
26
27
28
29
31
32
33
34
35
36

111

Print Date: 07-Apr-2022

2.14

OPEN BOX BODY

Fig. No.	Part No.	Description	Qty	Remarks
1	6B000091BW	FLAT CAR ASSLY (DTL PANELS)_BW	1	501 CNG/LPG WC LDx + (6 feet)
1	6B000091CB	FLAT CAR ASSLY (DTL PANELS)_CB	1	501 CNG/LPG WC LDx + (6 feet)
1	6B000091CO	FLAT CAR ASSLY (DTL PANELS)_CO	1	501 CNG/LPG WC LDx + (6 feet)
1	6B000091GY	FLAT CAR ASSLY (DTL PANELS)_GY	1	501 CNG/LPG WC LDx + (6 feet)
1	6B000091EG	FLAT CAR ASSLY (DTL PANELS)_EG	1	501 CNG/LPG WC LDx + (6 feet)
1	6B000091PA	FLAT CAR ASSLY (DTL PANELS)_PA	1	501 CNG/LPG WC LDx + (6 feet)
1	6B000091PB	FLAT CAR ASSLY (DTL PANELS)_PB	1	501 CNG/LPG WC LDx + (6 feet)
1	B079142PA	FLAT CAR ASSLY WC LD (DTL PANELS)_PA	1	501 CNG/LPG WC LDx + (6 feet)
1	B079142PB	FLAT CAR ASSLY WC LD (DTL PANELS)_PB	1	501 CNG/LPG WC LDx + (6 feet)
1	B079142BW	FLAT CAR ASSLY WC LD (DTL PANELS)_BW	1	501 CNG/LPG WC LDx + (6 feet)
2	8265	SELF TAPPING SCREW	12	
3	31119	HEX HD SCREW M8 X 25	6	
4	B008402	LOCK SET WITH KEYS CNG (PICK UP VAN)	1	
5	B042513ED	SIDE PANEL ASSLY PICK UP (DTL) –CED	2	
6	B042505ED	TAIL GATE PANEL DTL 501 PICK UP/LD-CED	1	
7	660207ED	ENGINE INSPECTION DOOR 501 CNG/LPG	1	
8	109361	BUFFER (ENGINE INSPECTION COVER)	2	
9	128804ED	LH LEVER FOR CLAMPING THE SIDE PANEL CED	1	
9	128805ED	RH LEVER FOR CLAMPING THE SIDE PANEL CED	1	
10	30074	HEX HEAD BOLT M8 X 40 CL 8.8	2	
11	016408	SPRING WASHER	8	
12	20108	HEX NUT M8	4	
13	3057	PL. WASHER 13 X 7 X 1	4	
15	B077358	STOP BUFFER	4	
16	661262	YELLOW REFLECTIVE TAPE	2	
17	643661	LICENSE PLATE MTG. BKT.	1	
18	31058	HEX HEAD SCREW M5 X 16 CC8.8	4	
19	16405	SPRING WASHER M5	4	
20	20105	PLAIN NUT M5	4	
21	3055	PLAIN WASHER M5	4	
22	16603	PLAIN WASHER (METALLIC)	8	
23	15727	PAN SELF TAPPING SCREW	4	
24	31089	HEX HEAD SCREW M6X18 CL 8.8	6	
25	016406	SPRING WASHER	4	
26	20106	HEX NUT M6	4	

112

Print Date: 07-Apr-2022

2.14
OPEN BOX BODY

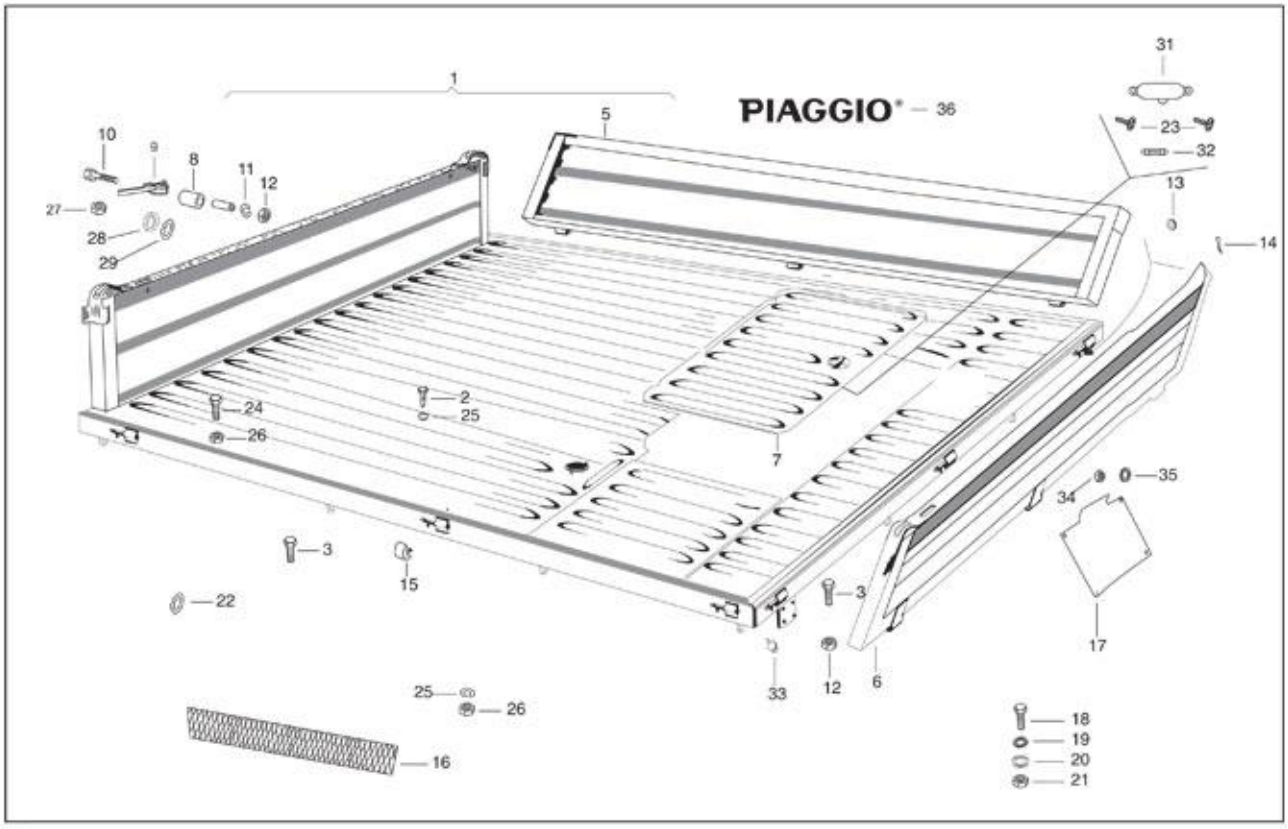
PIAGGIO
1
2
3
5
6
7
8
9
10
11
12
13
14
15
16
17
18
19
20
21
22
23
24
25
26
27
28
29
31
32
33
34
35
36

113

Print Date: 07-Apr-2022

2.14

OPEN BOX BODY

Fig. No.	Part No.	Description	Qty	Remarks
27	12138	NYLOCK NUT M6	2	
28	3058	PLAIN WASHER 15X8.4X1.5	8	
29	005967	CIRCLIP / DIA 7E	4	
31	150041R	CABIN LIGHT ASSY. (W/O BULB)	1	
32	71633	STOP AND PARKING BULB 12V 10/5 W	1	
33	567732	BUFFER	2	
34	20106	HEX NUT M6	2	
35	016406	SPRING WASHER	2	
36	662323	PIAGGIO TAIL GATE (YESHSHREE) STICKER FOR LIGHT COLOUR SHADE	1	
1	B079142CB	FLAT CAR ASSLY WC LD (DTL PANELS_CB	1	501 CNG/LPG WC LD 5.5 Feet
1	B079142CO	FLAT CAR ASSLY WC LD (DTL PANELS)_CO	1	501 CNG/LPG WC LD 5.5 Feet
1	B079142GY	FLAT CAR ASSLY WC LD (DTL PANELS)_GY	1	501 CNG/LPG WC LD 5.5 Feet
1	B079142EG	FLAT CAR ASSLY WC LD (DTL PANELS)_ED	1	501 CNG/LPG WC LD 5.5 Feet

114

Print Date: 07-Apr-2022

2.15
CABLE HARNESS

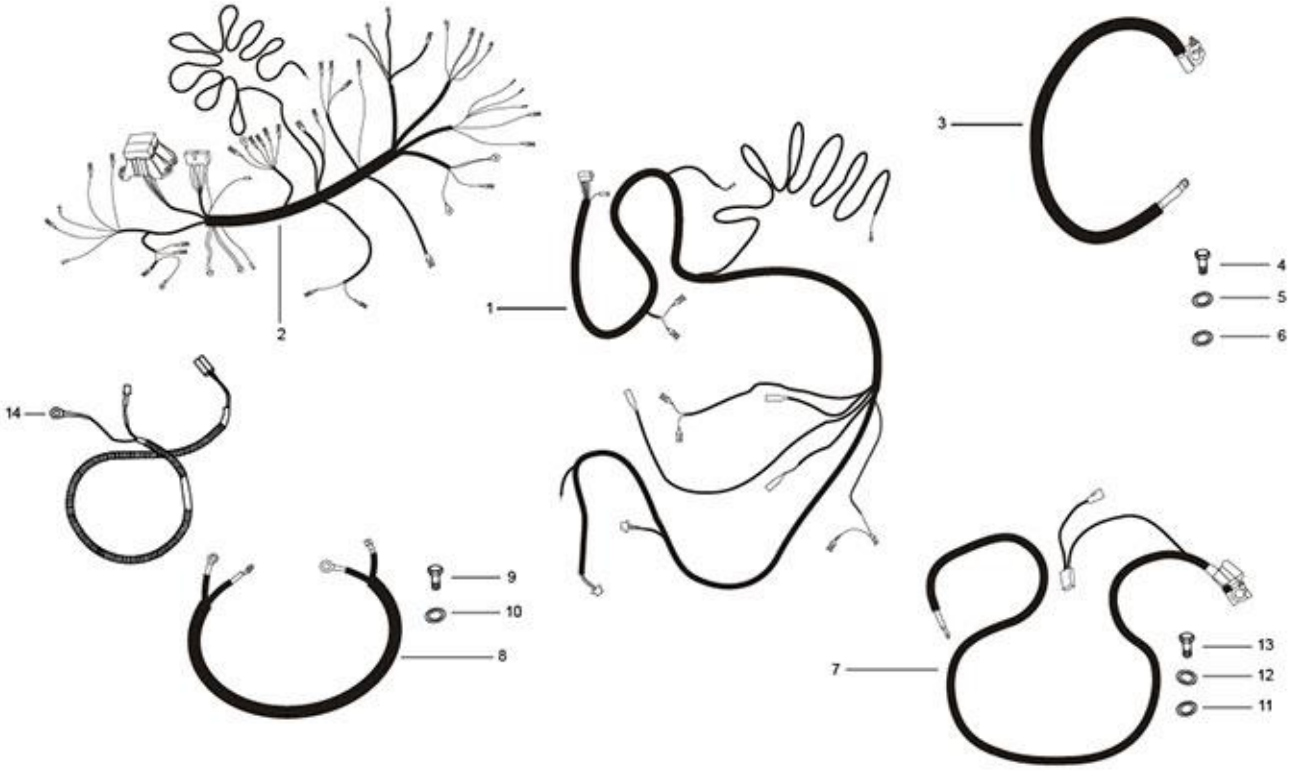
1
2
3
4
5
6
7
8
9
10
11
12
13
14

115

Print Date: 07-Apr-2022

2.15

CABLE HARNESS

Fig. No.	Part No.	Description	Qty	Remarks
1	B077260	W/H MAIN_APE 501 WC ENGINE W/O FAN CONTROLLER - CNG/LPG	1	Pass. PU
1	B078260	W/H MAIN_APE 501 WC ENGINE W/O FAN CONTROLLER - CNG/LPG	1	LD
1	6D000019	WHS MAIN_501 (LDX PLUS) LPG(WC GCL ENG)	1	LPG 6 feet
1	6D000018	WHS MAIN_501(LDX PLUS) CNG (WC GCL ENG)	1	CNG 6 Feet
2	B077261	W/H INST PANEL HARNESS -	1	Common
3	644838R	BATTERY CABLE -VE	1	
4	31088	HEX HD SCREW M6 X 16 CL 8.8 (811061623)	1	
5	3056	PLAIN WASHER M6 OD12	1	
6	016406	SPRING WASHER	1	
7	644837R	BATTERY CABLE +VE	1	
8	567484	STARTER CABLE GROUP	1	
9	31116	HEX HD. SCREW M8X16	1	
10	3058	PLAIN WASHER 15X8.4X1.5	1	
11	016406	SPRING WASHER	1	
12	3056	PLAIN WASHER M6 OD12	1	
13	31088	HEX HD SCREW M6 X 16 CL 8.8 (811061623)	1	
14	B073320R	PIG TAIL- CABIN LAMP (NEW)-PASSENGER	1	NI
15	6D000410	CNG GAS KIT HARNESS-APE_501 WC ENG	1	
15	B078218	GAS KIT WIRING HARNESS - LPG D+3,CARGO PU	1	

116

Print Date: 07-Apr-2022

2.16

FRONT BRAKE ASSEMBLY SELF ADJUSTING (DIA 180 X 40 MM)

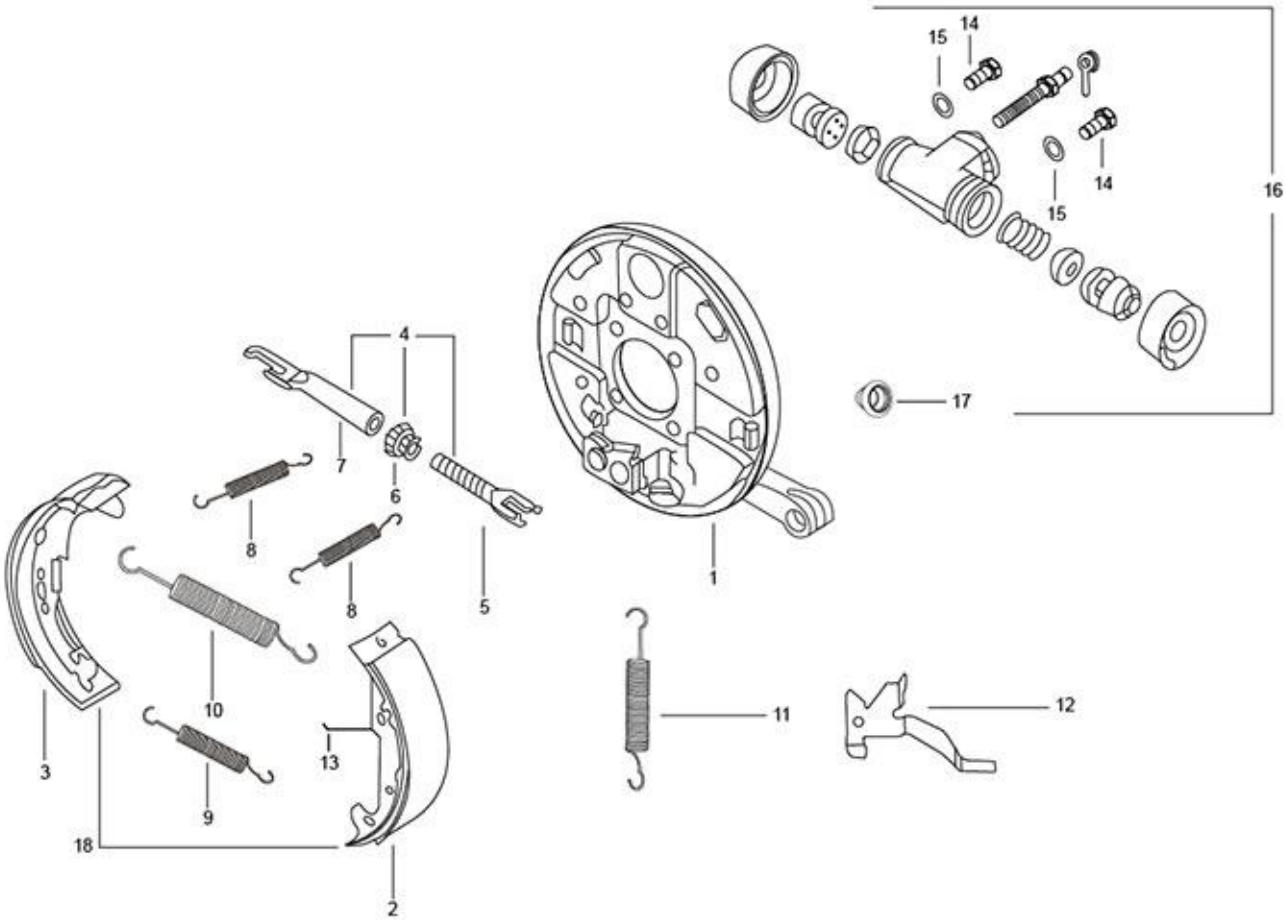
15
14
14
15
16
17
4
7
6
8
8
5
1
10
11
12
3
13
9
18
2

117

Print Date: 07-Apr-2022

2.16

FRONT BRAKE ASSEMBLY SELF ADJUSTING (DIA 180 X 40 MM)

Fig. No.	Part No.	Description	Qty	Remarks
1	616541	BRACKET WHEEL CARRIER WITH PI	1	
2	B003784	LEADING SHOE COMP WITH PIN LH ANL 1643	1	
3	940004	FRONT BRAKE SHOE KIT COMPRISING OF 2 & 3	1	
4	179056	FORK ASSY LH	1	
5	178804	FORK FOR LH WHEEL	1	
6	178805	LH - GEAR	1	
7	178806	LH STRUT	1	
8	602497	JAWS STOP SPRINGS	2	
9	116088	SPRING SUPPORTING JAWS	1	
10	245038	SHOE RETURN SPRING	1	
11	178808	SPRING LEVER RETURN	1	
12	178807	LEVER LH	1	
13	178823	JUMPER LH	1	
13	178824	JUMPER	1	
14	63440	BOLT M6X12	2	
15	12536	SPRING WASHER	2	
16	587616	BRAKE CYLINDER FR ASSLY (DIA. 22.225)	1	
17	925501	CAP (KBX P 6450225)	1	
18	940004	FRONT BRAKE SHOE KIT COMPRISING OF 2 & 3	1	
19	925521	MINOR KIT WHEEL CYL. FRT (KBX 1007)	1	NI

118

Print Date: 07-Apr-2022

2.17

REAR BRAKE ASSEMBLY SELF ADJUSTING (DIA 180 X 40 MM)

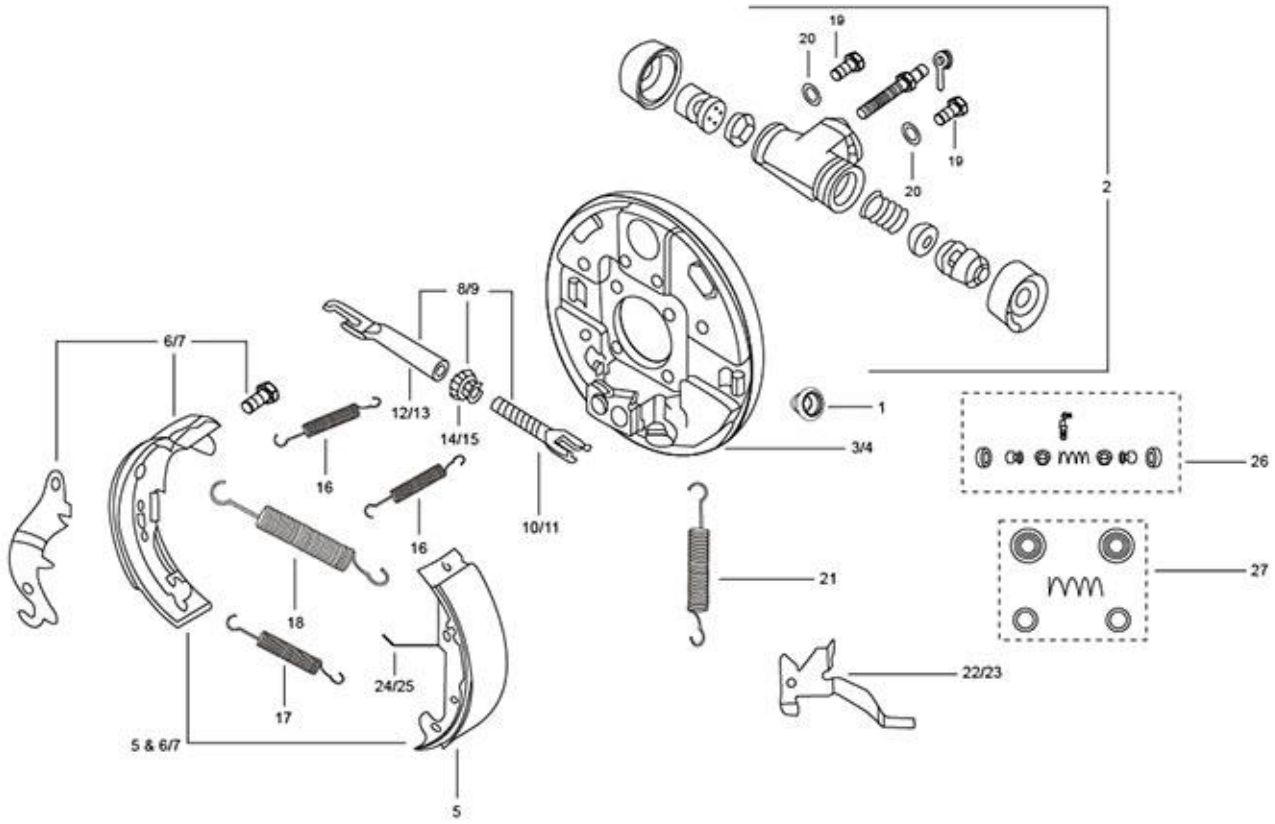
19
20
19
20
2
8/9
6/7
12/13
14/15
1
3/4
26
16
16
10/11
21
27
18
24/25
22/23
17
5 & 6/7
5

119

Print Date: 07-Apr-2022

2.17

REAR BRAKE ASSEMBLY SELF ADJUSTING (DIA 180 X 40 MM)

Fig. No.	Part No.	Description	Qty	Remarks
1	925501	CAP (KBX P 6450225)	1	
2	632148	WHEEL CYLINDER ASSY. FRONT DIA. (25.4 MM)	1	
3	602120	LEFT BRAKE JAW HOLDING CABLE PLATE	1	
4	602123	RIGHT BRAKE JAW HOLDING CABLE PLATE	1	
5	B003784	LEADING SHOE COMP WITH PIN LH ANL 1643	1	
6	940005	REAR BRAKE SHOE SET L/H COMPRISING OF 5 & 7	1	
7	940006	REAR BRAKE SHOE SET R/H. COMPRISING OF 5 & 8	1	
8	179056	FORK ASSY LH	1	
9	179057	FORK ASSY. RH	1	
10	178804	FORK FOR LH WHEEL	1	
11	178818	RH FORK	1	
12	178806	LH STRUT	1	
13	178820	RH STRUT	1	
14	178805	LH - GEAR	1	
15	178819	RH GEAR	1	
16	602497	JAWS STOP SPRINGS	2	
17	116088	SPRING SUPPORTING JAWS	1	
18	245038	SHOE RETURN SPRING	1	
19	63440	BOLT M6X12	2	
20	12536	SPRING WASHER	2	
21	178808	SPRING LEVER RETURN	1	
22	178807	LEVER LH	1	
23	178821	LEVER RH	1	
24	178823	JUMPER LH	1	
25	178824	JUMPER	1	
28	940005	REAR BRAKE SHOE SET L/H COMPRISING OF 5 & 7	1	
29	940006	REAR BRAKE SHOE SET R/H. COMPRISING OF 5 & 8	1	

120

Print Date: 07-Apr-2022

2.18
CNG KIT

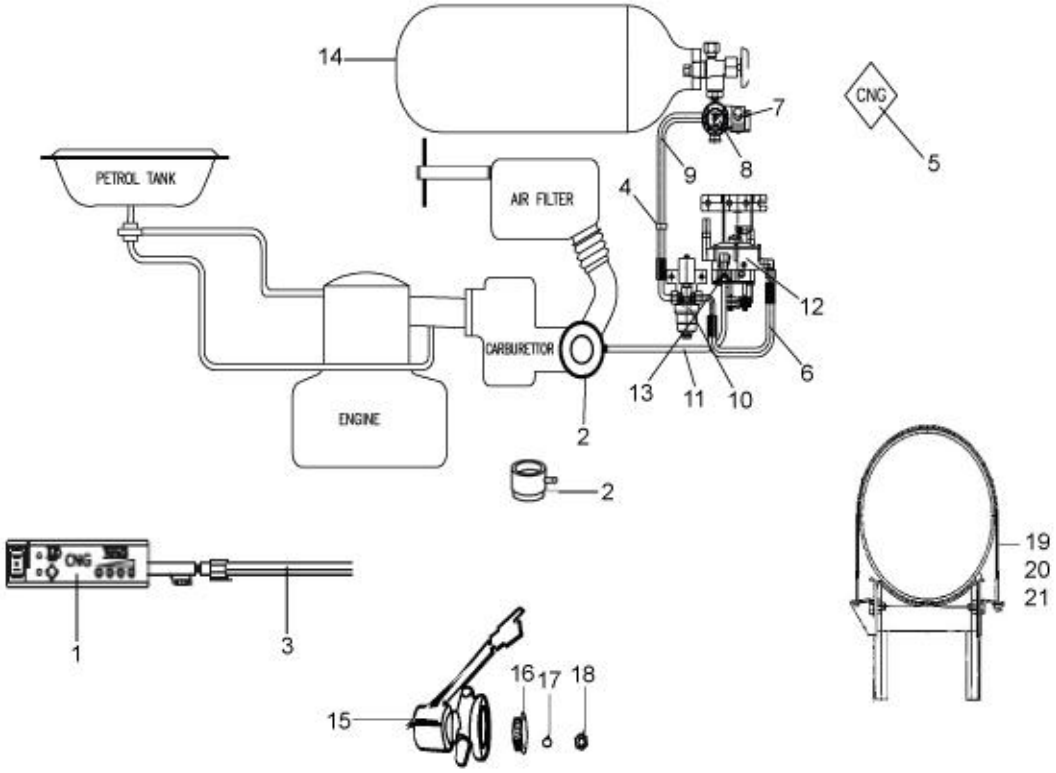
14
7
CNG
5
9
8
PETROL TANK
AIR FILTER
4
12
CARBURETTOR
6
13
11
10
ENGINE
2
2
19
20
21
CNG
1
3
16
17
18
15

121

Print Date: 07-Apr-2022

2.18
CNG KIT

Fig. No.	Part No.	Description	Qty	Remarks
1	6D000407	ECU WITH CNG LEVEL INDICATOR	1	
2	B078353	MIXER ASSEMBLY-CNG	1	
3	6D000410	CNG GAS KIT HARNESS-APE_501 WC ENG	1	
3	6D000411	CNG(LD) GAS KIT HARNESS-APE_501 WC ENG	1	LD
4	B042199	CLIP	1	
5	643850	STICKER	2	
6	932252	HOSE SOLENOID TO LPR	1	
7	B024131	FIRST STAGE REDUCTION UNIT (HPR)	1	
8	B041784	CNG PRESSURE GAUGE WITH SENSOR	1	
9	B074855	FLEXIBLE HOSE ASSLY (HPR TO FSV)	1	
9	B078470	FLEXIBLE HOSE ASSLY (HPR TO FSV)	1	LD
10	B075638	FILTER SOLENOID VALVE (CNG)	1	
11	B075982	LOW PRESS CNG HOSE	2	
12	B079402	ASSEMBLY 2 STAGE REGULATOR CNG	1	
13	B024147	CLIP	2	
14	B042657R	CNG CYLINDER M/S EKC WITH OMB VALVE	1	
15	932273	COIL ASSEMBLY	1	
16	932274	PAPER FILTER	1	
17	932275	O RING	1	
18	932276	DRAIN PLUG	1	
19	659862	STRAP ASSLY (CNG)	2	
20	604856	RUBBER STRAP LOWER	2	
21	659857	RUBBER STRAP UPPER	2	

122

Print Date: 07-Apr-2022

2.19

TWO STAGE CNG REGULATOR

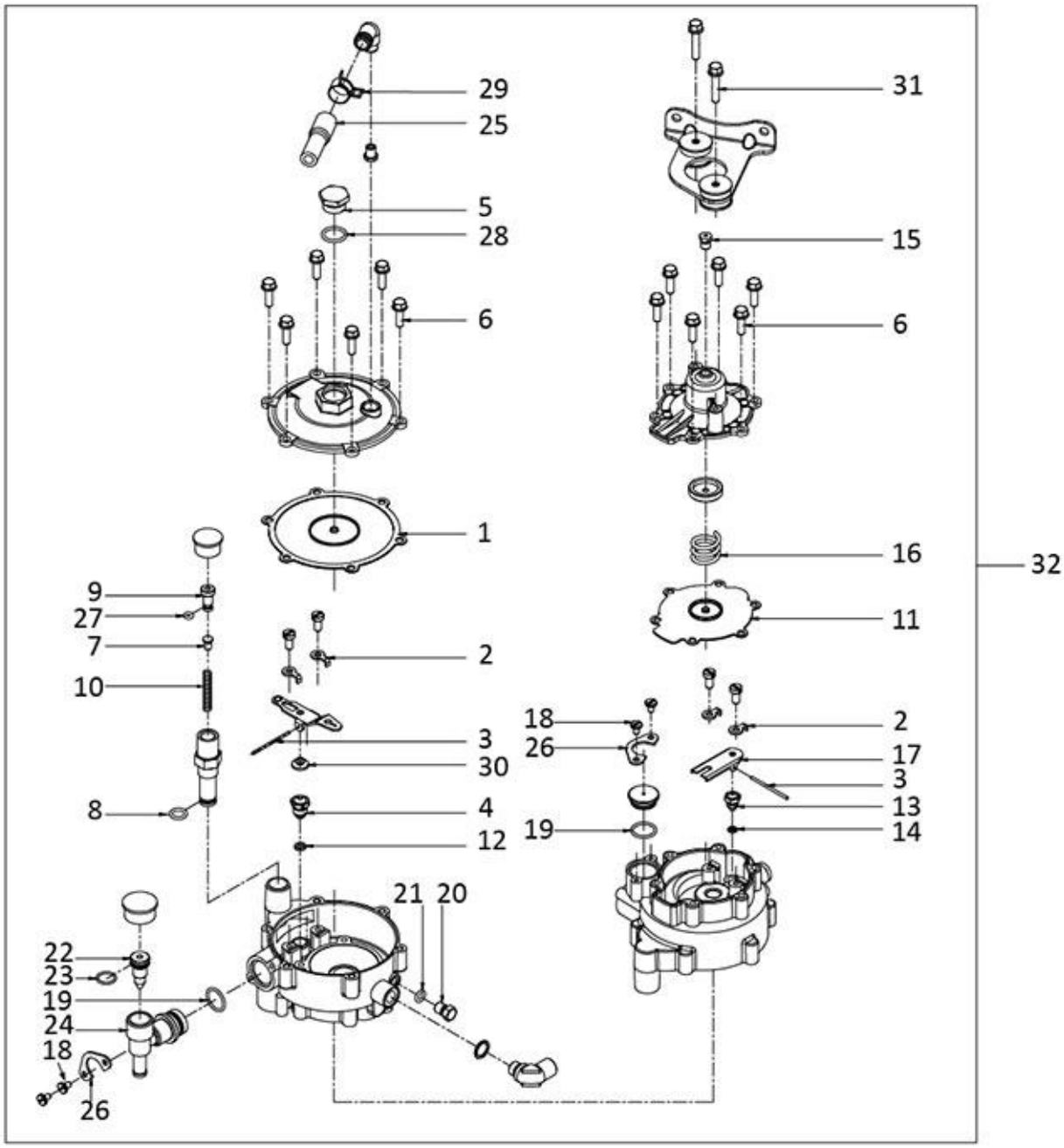
29
25
5
28
6
1
9
27
7
10
8
2
3
30
4
12
22
23
19
24
18
26
21
20
31
15
6
16
11
2
17
3
13
14
18
26
19
32

123

Print Date: 07-Apr-2022

2.19

TWO STAGE CNG REGULATOR

Fig. No.	Part No.	Description	Qty	Remarks
1	932207	DIAPHRAGM SUB ASSY.	1	
2	932208	WASHER	4	
3	932210	LEVER PIN	1	
4	932211	SEAT	1	
5	932229	PLUG	1	
6	932232	FLANGE SCREW	12	
7	932212	SPRING GUIDE	1	
8	925781	O RING	1	
9	932226	IDLE SCREW	1	
10	932213	SPRING	1	
11	932215	DIAPHRAGM SUB ASSY.	1	
12	932214	WASHER	1	
13	932218	SEAT	1	
14	932219	WASHER	1	
15	932230	BREATHER-I	1	
16	932216	SPRING	1	
17	932217	LEVER SUB ASSY.	1	
18	932220	CHEESE HEAD SCREW	1	
19	932221	O RING	1	
20	932222	PLUG	1	
21	932265	O RING (R-8101-760) PAXX 200 LPG	1	
22	932225	FLOW ADJUSTING SCREW	1	
23	932242	ORING	1	
24	932224	FLOW CONTROL BODY	1	
25	932227	BREATHER HOSE	1	
26	932228	CLAMP	2	
27	932240	O RING	1	
28	932231	O RING	1	
29	932254	CLIP	1	
30	925768	PAD	1	
31	932255	FLANGE SCREW	1	
32	B079402	ASSEMBLY 2 STAGE REGULATOR CNG	1	

124

Print Date: 07-Apr-2022

2.20

FIRST STAGE REDUCTION UNIT

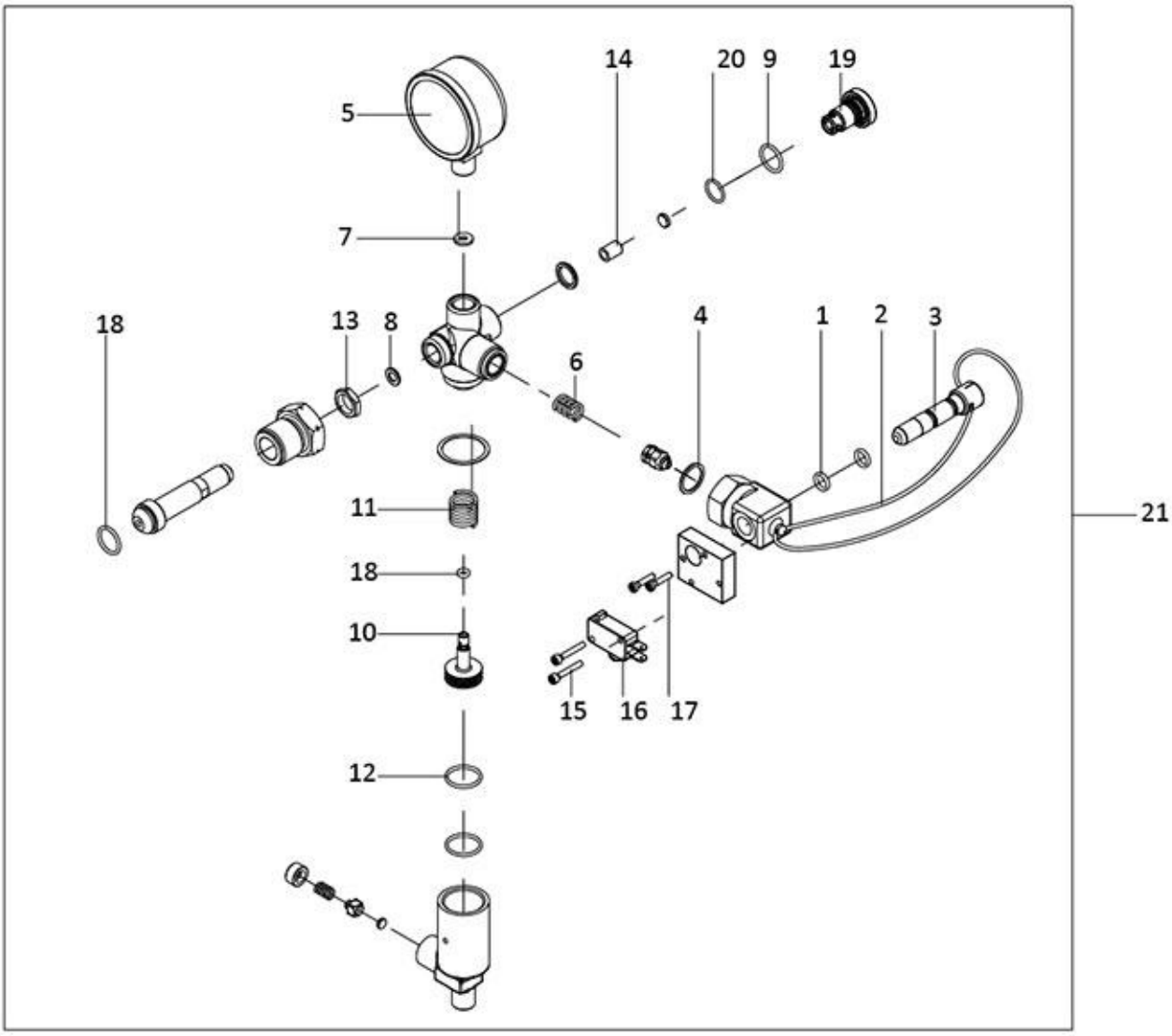
14
20
9
19
5
7
18
13
8
4
1
2
3
6
21
11
18
10
15
16
17
12

125

Print Date: 07-Apr-2022

2.20

FIRST STAGE REDUCTION UNIT

Fig. No.	Part No.	Description	Qty	Remarks
1	929931	O RING	2	
2	929933	STRING	1	
3	661399	DUST PLUG	1	
4	929934	SEALING WASHER	1	
5	B041784	CNG PRESSURE GAUGE WITH SENSOR	1	
6	929935	SPRING	1	
7	932233	WASHER	1	
8	929936	WASHER	1	
9	932235	O RING	2	
10	932237	PISTON SUB ASSY.	1	
11	932236	SPRING	1	
12	932238	O RING	1	
13	932239	LOCK NUT	1	
14	932243	FILTER	1	
15	929938	PHILIPS HEAD SCREW M3 X 20L	2	
16	929939	MICROSWITCH	1	
17	929940	PHILIPS HEAD SCREW M3 X 15L	2	
18	932240	O RING	1	
19	932241	RETAINER	1	
20	932242	ORING	1	
21	B024131	FIRST STAGE REDUCTION UNIT (HPR)	1	

126

Print Date: 07-Apr-2022

2.21
LPG Kit

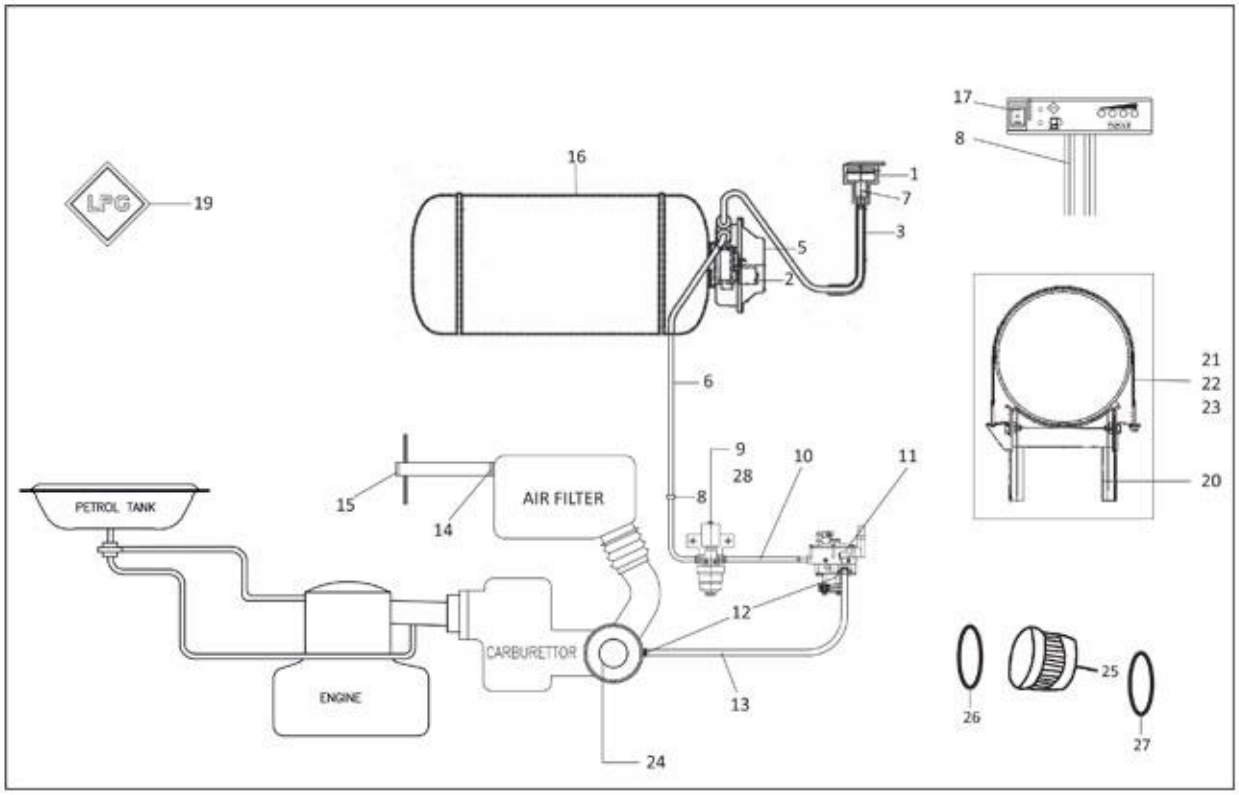
17
8
16
1
7
3
5
2
19
LPG
21
22
23
20
6
9
28
10
11
8
15
14
AIR FILTER
PETROL TANK
12
CARBURETTOR
ENGINE
13
24
25
26
27

127

Print Date: 07-Apr-2022

2.21

LPG Kit

Fig. No.	Part No.	Description	Qty	Remarks
1	6A000014	FILLER VALVE	1	For Mexico P&C Export
1	929925	HOUSING ASSEMBLY FOR FILLER CONNECTOR	1	
2	B075426	MULTIFUNCTION VALVE VANAZ	1	
3	B041491	VENT HOSE ASSY - 1	1	
4	B073085	LPG FLEX. HOSE ASSY. - FOR REFUELING	1	
5	B073084	SEAL BOX	1	
6	B074851	LPG FLEXIBLE HOSE ASSY (MFV TO FSV)	1	
6	B078657	LPG FLEXIBLE HOSE ASSY (MFV TO FSV)	1	LD
7	925743	FILLER CONNECTOR WITH CAP	1	
8	B042199	CLIP	2	
9	B075636	FILTER SOLENOID VALVE (LPG)	1	
10	932306	LPG FLEXIBLE HOSE ASSY -FROM FSV TO LPR	2	
11	B079368	STAGE LPG REGULATOR	1	
12	B024174	CLIP	1	
13	B042750	HOSE REGULATOR TO CARBURETTOR	1	
15	940064	COIL ASSEMBLY-LPG(K-0440-03-I-170)	1	
16	B073024	LPG CYLINDER	1	
17	932268	ECU	1	
18	B078218	GAS KIT WIRING HARNESS - LPG D+3,CARGO PU	1	
18	B078642	LPG(LD) GAS KIT HARNESS-APE_501 WC ENG	1	LD
19	643882	STICKER(VANAZ PT NO K-0401-13)	1	
20	643927	ASSY CENTRAL BRACKET	2	
21	632183	RUBBER STRAP	2	
22	632184	RUBBER STRAP UPPER	2	
23	632185	LOWER STRAPS ASSY.	2	
24	B078639	MIXER ASSLY LPG	1	
25	925737	FILTER ELEMENT(K-0301-12-050)	1	
26	929949	O RING	1	
27	929948	O RING	1	
28	920012	SOLENOID SWITCH (MFV)	1	
29	B077513	CONTENT GAUGE LPG (ZERO DEGREE)	1	NI

128

Print Date: 07-Apr-2022

2.22

TWO STAGE LPG REGULATOR

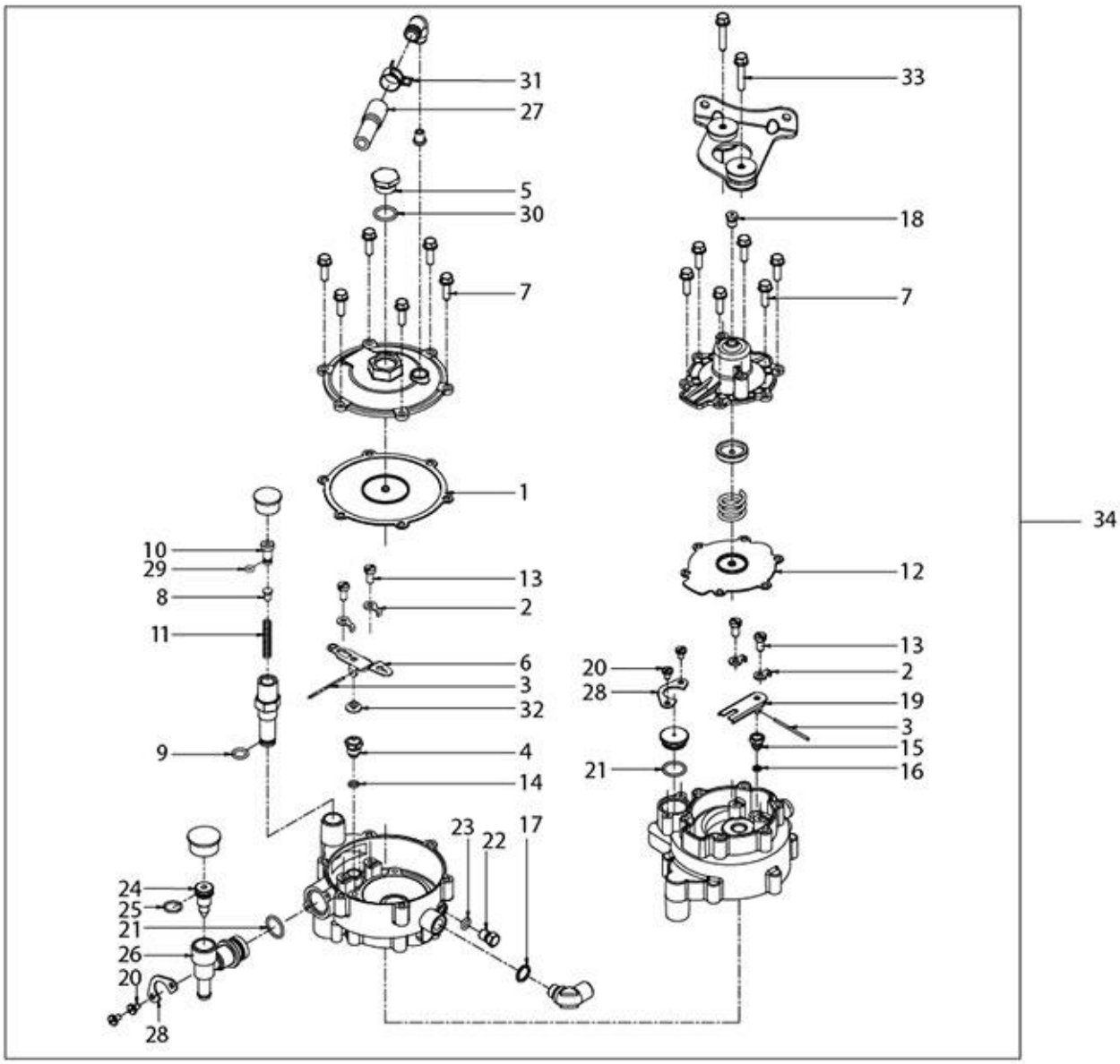
31
27
5
30
7
1
10
29
8
11
9
13
2
6
3
32
4
14
23
22
17
24
25
21
26
20
28
33
18
7
34
12
13
2
20
28
19
3
15
21
16

129

Print Date: 07-Apr-2022

2.22

TWO STAGE LPG REGULATOR

Fig. No.	Part No.	Description	Qty	Remarks
1	932207	DIAPHRAGM SUB ASSY.	1	
2	932208	WASHER	4	
3	932210	LEVER PIN	1	
4	932263	SEAT	1	
5	932229	PLUG	1	
6	932209	LEVER SUB ASSY	1	
7	932232	FLANGE SCREW	12	
8	932212	SPRING GUIDE	1	
9	925781	O RING	1	
10	932226	IDLE SCREW	1	
11	932264	SPRING	1	
12	932215	DIAPHRAGM SUB ASSY.	1	
13	661909	CHEESE HEAD SCREW	4	
14	932214	WASHER	1	
15	932218	SEAT	1	
16	932219	WASHER	1	
17	920008	WASHER	1	
18	932230	BREATHER-I	1	
19	932217	LEVER SUB ASSY.	1	
20	932220	CHEESE HEAD SCREW	1	
21	932221	O RING	1	
22	932222	PLUG	1	
23	925783	O RING	1	
24	932225	FLOW ADJUSTING SCREW	1	
25	932242	ORING	1	
26	932224	FLOW CONTROL BODY	1	
27	932227	BREATHER HOSE	1	
28	932228	CLAMP	2	
29	932240	O RING	1	
30	932231	O RING	1	
31	932270	CLIP	1	
32	925768	PAD	1	
33	932255	FLANGE SCREW	1	
34	B079368	STAGE LPG REGULATOR	1	

130

Print Date: 07-Apr-2022

PLATE-24.1
CLUCTH & CLUCTH COVER

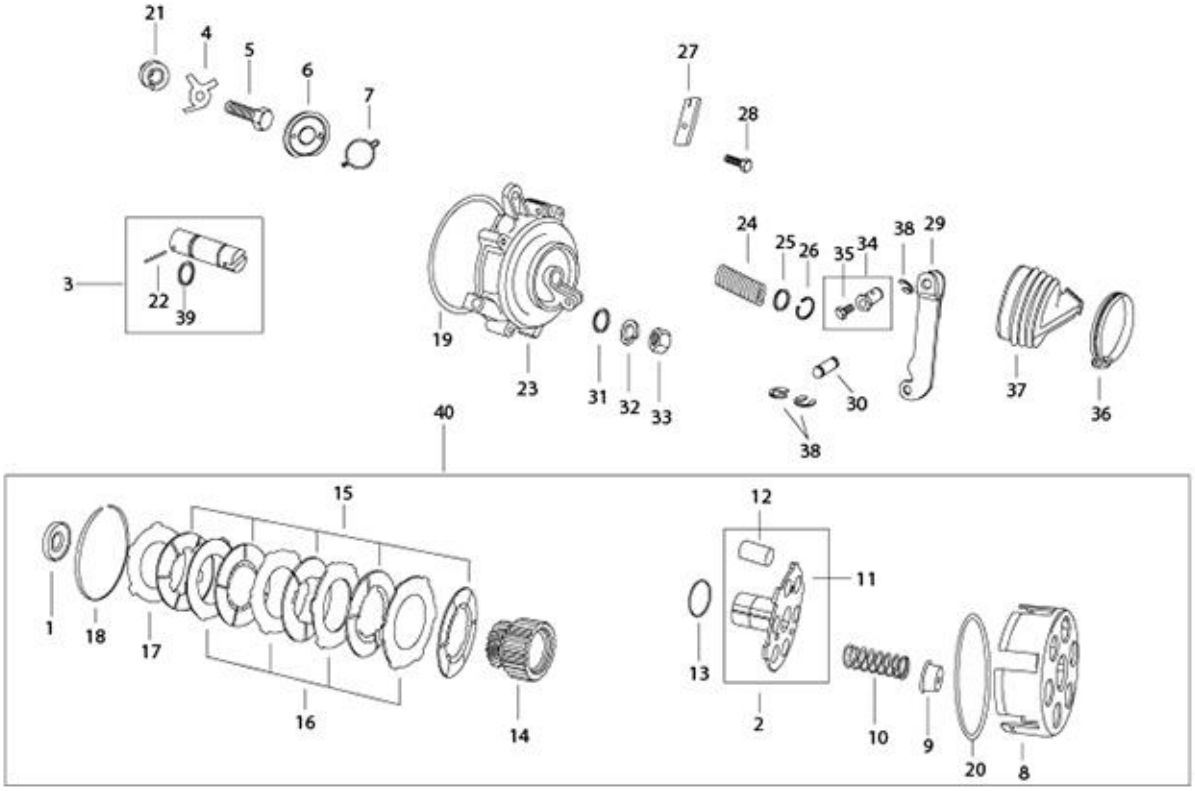
21
4
5
6
7
27
28
3
22
39
19
23
31
32
33
24
25
26
35
34
38
29
30
38
37
36
40
15
1
18
17
16
14
12
11
13
2
10
9
20
8

131

Print Date: 07-Apr-2022

PLATE-24.1
CLUCTH & CLUCTH COVER

Fig. No.	Part No.	Description	Qty	Remarks
1	652124	SPACER WASHER-CLUTCH	1	
2	1F000755	CLUTCH SHAFT ASSY. (IMPROVED)	1	
3	1A001457	PLUNGER SHAFT	1	
4	129012013	TAB WASHER	1	
5	E47177007	SCREW M8X1.25X30	1	
6	1A011547R	THRUST BEARING	1	
7	286406	SPRING CLIP	1	
8	1A001455	CLUTCH HOUSING	1	
9	127757011	CUP - CLUTCH SPRING	6	
10	127755013	SPRING CLUTCH	6	
11	1F000755	CLUTCH SHAFT ASSY. (IMPROVED)	1	
12	NS	NOT SERVICEABLE	1	
13	127758015	SHIM	1	
14	1F000754	ENGINE GEAR (MANTANO)	1	
15	127530011	DRIVEN PLATE ASLY	5	
16	127692015	DRIVING PLATE THK. 2.0 MM	4	
17	127693019	PRESSURE PLATE OUTER (VE)	1	
18	127754019	CIRCLIP - CLUTCH BOX	1	
19	825123207	O - RING CLUTCH COVER	1	
20	1A005414R	RING CLUTCH BOX	1	
21	129011019	WASHER FOR CLUTCH ASSY.	1	
22	822031942	SPRING PIN 3 X 19	1	
23	1A011662	CLUTCH COVER	1	
24	127185012	SPRING - CLUTCH COVER	1	
25	120164019	RETAINING PLATE	1	
26	842001600	CIRCLIP DIA.16(EXT)	1	
27	127471019	BRACKET CLUTCH CABLE GUIDE	1	
28	31092	HEX. HD SCREW M6X25	1	
29	127460010	LINK ASSLY - CLUTCH (IMPROVED)	1	
30	127013013	PIN CLUTCH	1	
31	3056	PLAIN WASHER M6 OD12	4	
32	016406	SPRING WASHER	4	
33	20106	HEX NUT M6	4	
34	B024379	SCREW TERMINAL ASSLY-ENGINE STOP,D.C.	1	
35	120238016	BOLT FOR SCREW TERMINAL	1	

132

Print Date: 07-Apr-2022

PLATE-24.1
CLUCTH & CLUCTH COVER

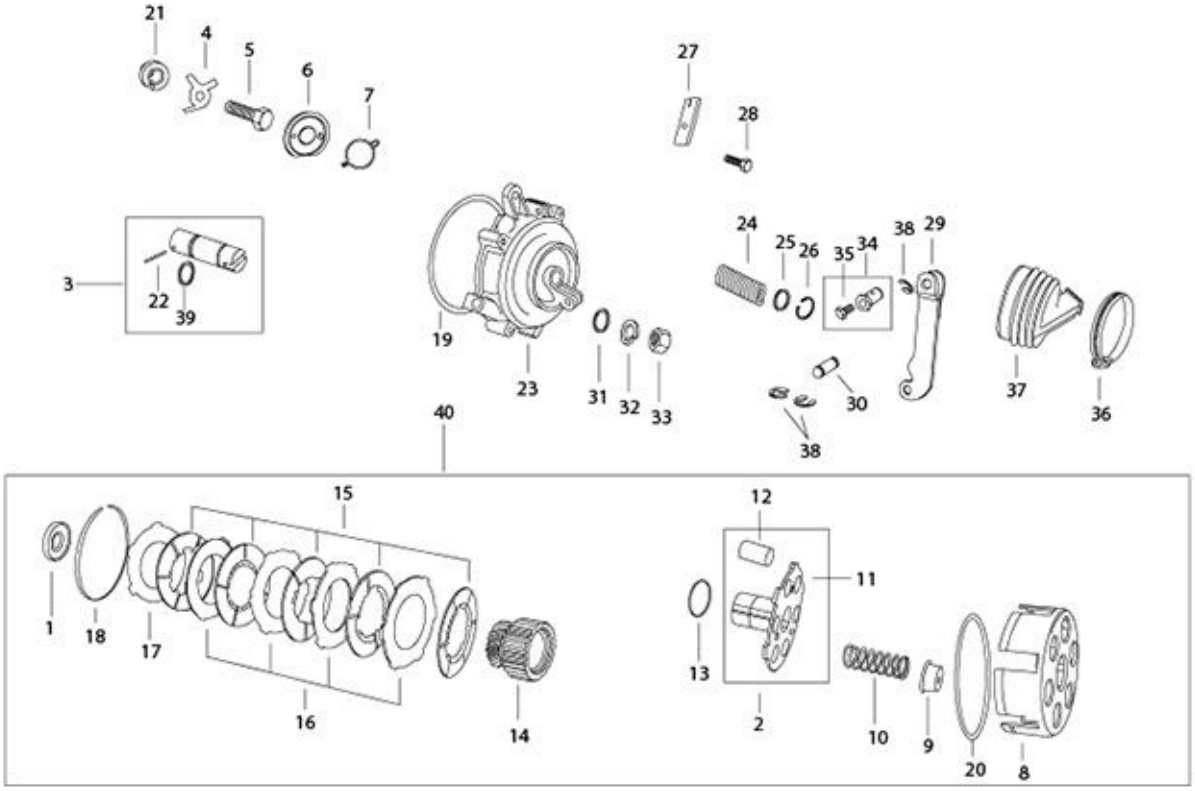
21
4
5
6
7
27
28
3
22
39
19
23
31
32
33
24
25
26
35
34
38
29
30
38
37
36
40
15
1
18
17
16
14
12
11
13
2
10
9
20
8

133

Print Date: 07-Apr-2022

PLATE-24.1
CLUCTH & CLUCTH COVER

Fig. No.	Part No.	Description	Qty	Remarks
36	120170018	HOSE CLIP - CLUTCH COVER BELOW	1	
37	127012019	BELLOW CLUTCH ACTUATING	1	
38	843000809	CIRCLIP DIA.8(EXT) TYPE C	3	
39	B019220	O- RING (PLUNGER SHAFT)	1	
40	1F000832	CLUTCH ASSY	1	
41	129011019	WASHER FOR CLUTCH ASSY.	1	NI

134

Print Date: 07-Apr-2022

PLATE-24.A
ALUMINIUM CLUTCH ASSEMBLY

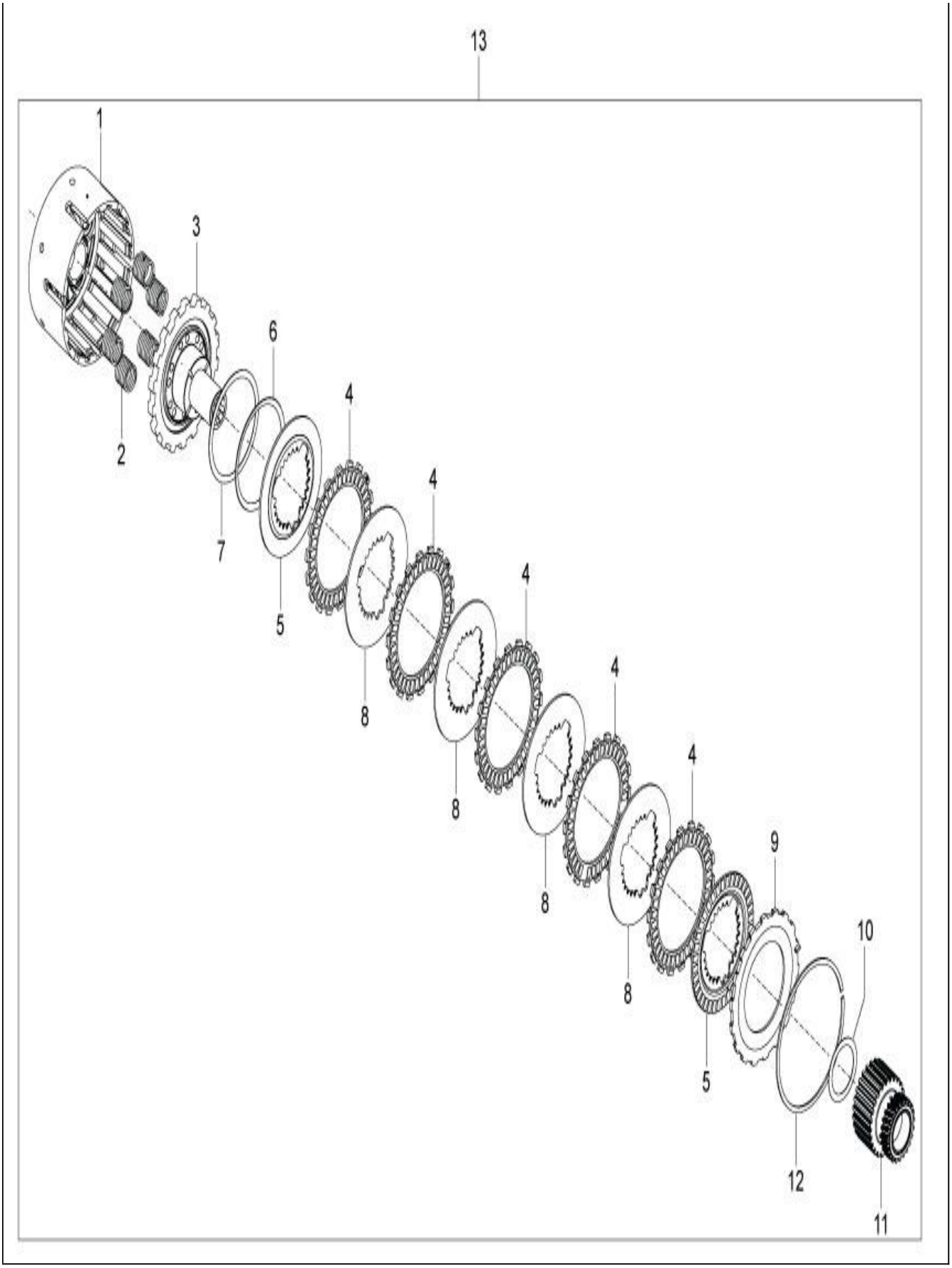
13
1
3
6
4
2
4
7
4
5
4
8
4
8
4
8
9
10
8
5
12
11

135

Print Date: 07-Apr-2022

PLATE-24.A

ALUMINIUM CLUTCH ASSEMBLY

Fig. No.	Part No.	Description	Qty	Remarks
1	1A017153	CLUTCH HOUSING	1	
2	1A017147	CLUTCH SPRING	6	
3	1A017154	PLATE HUB	1	
4	1A017155	DRIVER PLATE	5	
5	1A017156	DRIVEN PLATE	2	
6	1A017157	DAMPER SPRING	1	
7	1A017158	DAMPER SPRING RETAINER	1	
8	1A017159	DRIVEN PLATE	4	
9	1A017160	CLUTCH LOCK PLATE	1	
10	1A017161	SHIM WASHER	1	
11	1A017162	ENGINE GEAR WITH BUSH	1	
12	1A017163	RETAINING RING	1	
13	1A015065	COMPLETE CLUTCH ASSY	1	
14	KIT95117R	KIT ALUMINIUM CLUTCH PLATES DSL BS4/BS6	1	Complete Clutch Plate Set (NI)

136

Print Date: 07-Apr-2022

PLATE-24.B

CLUTCH & COVER ASSEMBLY (FOR ALUMINIUM CLUTCH)

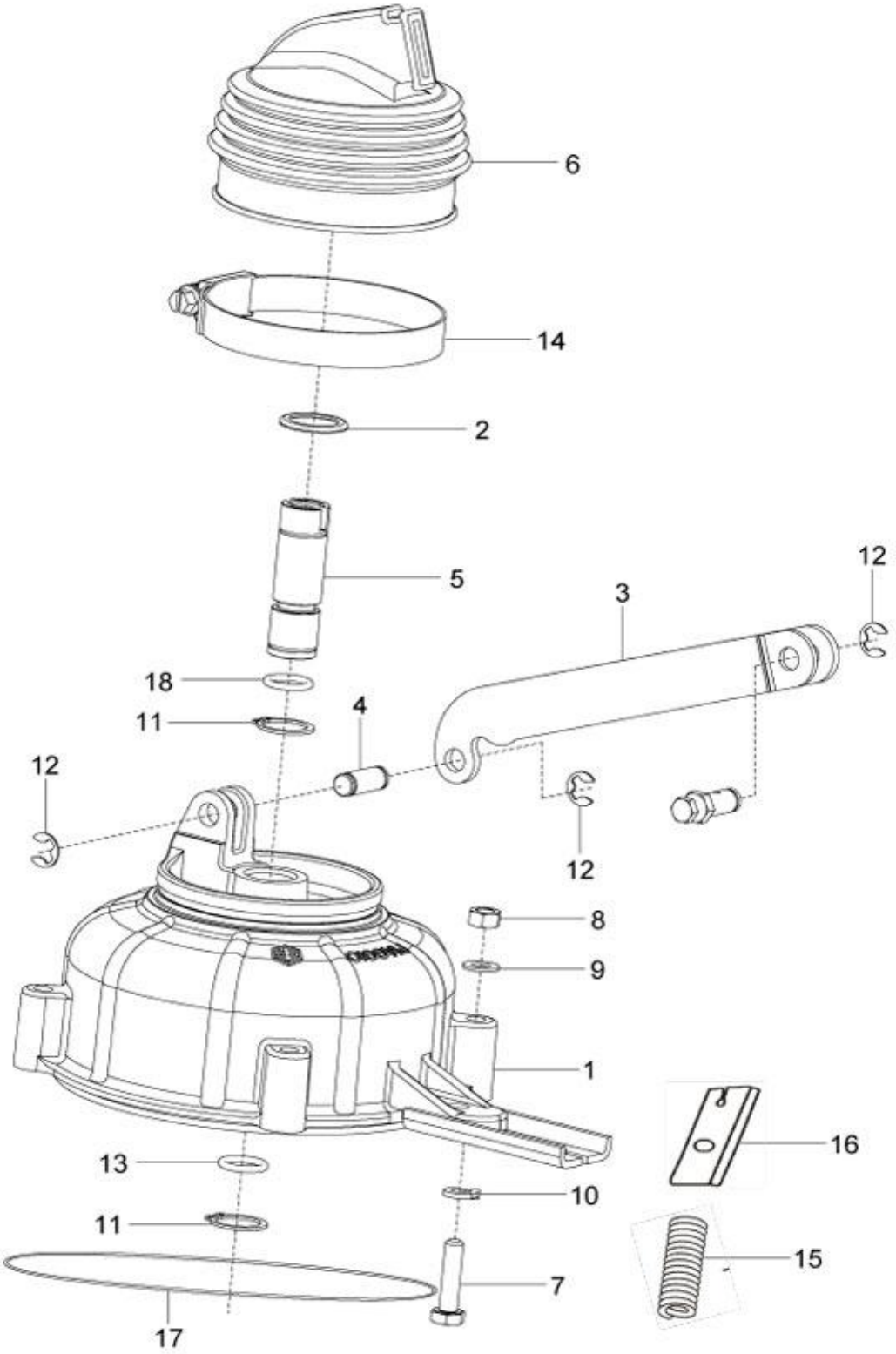
6
14
2
5
12
3
18
11
4
12
12
8
9
1
16
13
10
11
15
7
17

137

Print Date: 07-Apr-2022

PLATE-24.B

CLUTCH & COVER ASSEMBLY (FOR ALUMINIUM CLUTCH)

Fig. No.	Part No.	Description	Qty	Remarks
1	1F000830	CLUTCH COVER	1	
2	120164019	RETAINING PLATE	1	
3	1A019307	CLUTCH LEVER WITH I.P.	1	Modified
3	127460010	LINK ASSLY - CLUTCH (IMPROVED)	1	Old
4	127013013	PIN CLUTCH	1	
5	1A014753	PLUNGER SHAFT	1	
6	127012019	BELLOW CLUTCH ACTUATING	1	
7	31092	HEX. HD SCREW M6X25	1	
8	20106	HEX NUT M6	1	
9	3056	PLAIN WASHER M6 OD12	1	
10	016406	SPRING WASHER	1	
11	842001600	CIRCLIP DIA.16(EXT)	1	
12	843000809	CIRCLIP DIA.8(EXT) TYPE C	2	
13	B019220	O- RING (PLUNGER SHAFT)	1	
14	120170018	HOSE CLIP - CLUTCH COVER BELOW	1	
15	127185012	SPRING - CLUTCH COVER	1	
16	127471019	BRACKET CLUTCH CABLE GUIDE	1	
17	825123207	O - RING CLUTCH COVER	1	
18	B019220	O- RING (PLUNGER SHAFT)	1	

138

Print Date: 07-Apr-2022

PARTS INDEX

ape Auto WC BS-IV Pass Cargo Common

139

Print Date: 07-Apr-2022

PART NO	BLOCK	PART NO	BLOCK	PART NO	BLOCK
-	1.24	016408	2.14	111498	1.23
003054	2.12	016408	1.23	112867R	1.23
003054	2.12	016408	1.25	112898	1.23
003054	2.13	016408	1.25	113278	1.23
003054	1.23	016408	1.25	115531	2.03
003054	2.01	016408	2.02	116088	2.16
003054	2.04	016408	2.02	116088	2.17
003054	2.05	016408	2.06	116103	2.05
003054	2.06	016408	2.10	116333	2.03
005967	2.14	016408	2.10	116334	2.03
013880	2.11	031090	2.13	116971	2.03
013880	2.13	105392	2.02	117401	1.23
013880	2.05	107718	2.08	117402	1.23
013880	2.05	107732	2.08	117402	1.23
016404	2.13	107827	2.07	117404	1.23
016406	2.11	107870	2.07	118447	2.02
016406	2.12	107870	2.08	118806	2.09
016406	2.12	107871	2.08	119181	2.09
016406	2.13	108356	2.03	119278	1.23
016406	2.14	108785	2.10	119278	2.09
016406	2.14	108800	2.03	119278	2.10
016406	2.15	108801	2.03	119735	2.11
016406	2.15	108804	2.03	119928	2.09
016406	PLATE-24.1	108805	2.03	120159014	1.24
016406	PLATE-24.B	108873	2.08	120164019	PLATE-24.1
016406	1.18	108874	2.08	120164019	PLATE-24.B
016406	1.20	109012	2.02	120164019	1.24
016406	1.22	109064	2.08	120170018	PLATE-24.1
016406	1.23	109066	2.08	120170018	PLATE-24.B
016406	1.23	109117	2.08	120170018	1.24
016406	1.23	109120	2.03	120203011	1.23
016406	1.24	109121	2.03	120204015R	1.21
016406	2.05	109227	2.01	120205019	1.21
016406	2.09	109227	2.09	120212012	1.20
016408	2.10	109263	2.03	120238016	PLATE-24.1
016408	2.12	109265	2.08	120238016	1.24
016408	2.12	109361	2.14	120321019	1.23
016408	2.13	109404	2.09	120322013	1.23
016408	2.13	109635	2.09	12136	2.12
016408	2.13	109775	2.09	12136	1.20
016408	2.13	109892	2.07	12136	2.03
016408	2.13	111353	1.23	12138	2.13
016408	2.13	111356	1.23	12138	2.14

140

Print Date: 07-Apr-2022

PART NO	BLOCK	PART NO	BLOCK	PART NO	BLOCK
12138	2.09	127306513R	1.21	129011019	1.24
122032014	1.21	127309515R	1.21	129012013	PLATE-24.1
124102019	1.23	127404016R	1.23	129012013	1.24
124112014	1.23	127451019R	1.21	132129	1.23
124113018	1.23	127451	2.09	132134	1.23
124121015	1.23	127460010	PLATE-24.1	132244	1.23
124141015R	1.23	127460010	PLATE-24.B	136426	2.07
125012015	1.23	127460010	1.24	136434	2.08
125181	2.09	127471019	PLATE-24.1	136451R	2.07
12536	2.12	127471019	PLATE-24.B	136916	1.25
12536	2.16	127471019	1.24	137026	2.07
12536	2.17	127530011	PLATE-24.1	137235	2.08
12540	2.03	127530011	1.24	13812	2.10
12540	2.06	127555016	1.23	13812	2.03
12540	2.06	127571015R	1.23	138237	2.10
125411	2.10	12761	2.10	13861	2.02
12546	2.12	127640012	1.22	13861	2.03
12546	2.03	127641016	1.22	13861	2.06
125998	2.02	127692015	PLATE-24.1	13935	2.03
126003011	1.22	127692015	1.24	14034	2.06
126021013	1.22	127693019	PLATE-24.1	140603	2.03
126022017	1.22	127693019	1.24	140728	2.10
126052012	1.22	127754019	PLATE-24.1	140728	2.03
126053016	1.22	127754019	1.24	141925	2.09
126054010	1.22	127755013	PLATE-24.1	142424	2.06
126060019	1.22	127757011	PLATE-24.1	142425	2.06
126902	2.09	127757011	1.24	14628	2.13
127012019	PLATE-24.1	127758015	PLATE-24.1	14628	2.13
127012019	PLATE-24.B	127758015	1.24	14628	2.06
127012019	1.24	12790	2.07	150041R	2.14
127013013	PLATE-24.1	127911019	1.20	150579	2.08
127013013	PLATE-24.B	127912013	1.20	150915R	2.12
127013013	1.24	127927R	2.08	151924	2.03
127016015	1.23	128009	2.02	152025	2.03
127102010	1.20	128010	2.02	152580	2.07
127111011	1.23	128081017	1.22	152580	2.08
127141016	1.23	128306015	1.23	15335	1.20
127185012	PLATE-24.1	128307019	1.23	15335	1.23
127185012	PLATE-24.B	128633	2.07	15335	1.25
127185012	1.24	128804ED	2.14	15478	1.25
127203010R	1.21	128805ED	2.14	15478	2.09
127302517R	1.21	129011019	PLATE-24.1	15594	2.07
127303016R	1.21	129011019	PLATE-24.1	15640	2.12

141

Print Date: 07-Apr-2022

PART NO	BLOCK	PART NO	BLOCK	PART NO	BLOCK
157103	2.07	16410	2.09	18630	2.05
157103	2.07	164906	2.09	190255	2.02
157103	2.08	165121014	1.23	190255	2.03
15727	2.12	165121014	1.23	190462	2.06
15727	2.14	16603	2.14	190462	2.06
15727	2.03	16603	2.02	190479	2.06
15727	2.05	16603	2.06	192020017	2.03
157716	2.11	16620	2.09	193724	2.03
157716	2.05	16626	2.09	196302	2.07
15900	2.11	16670	2.13	197071	2.09
15900	2.13	16670	2.13	1A000236	1.23
15911	2.12	17702	1.22	1A000612	1.23
15911	2.13	17702	1.23	1A000817	1.23
15911	2.13	178610	1.25	1A000826	1.23
15911	1.25	178804	2.16	1A001455	PLATE-24.1
15911	2.06	178804	2.17	1A001455	1.24
15911	2.06	178805	2.16	1A001457	PLATE-24.1
15996	2.12	178805	2.17	1A001457	1.24
15996	2.13	178806	2.16	1A004807	1.23
16319	2.09	178806	2.17	1A005176	1.23
163659	2.03	178807	2.16	1A005414R	PLATE-24.1
163660	2.03	178807	2.17	1A009578R	1.21
163661	2.03	178808	2.16	1A009926	1.23
163663	2.03	178808	2.17	1A010094	1.20
163665	2.03	178818	2.17	1A010139	1.23
163666SP	2.03	178819	2.17	1A010698R	1.21
163667SP	2.03	178820	2.17	1A010700R	1.21
163782	2.03	178821	2.17	1A011547R	PLATE-24.1
163784	2.03	178823	2.16	1A011547R	1.24
16405	2.12	178823	2.17	1A011662	PLATE-24.1
16405	2.14	178824	2.16	1A011778	1.23
16405	1.18	178824	2.17	1A011810	1.23
16405	1.25	179056	2.16	1A011980R	1.21
16405	2.02	179056	2.17	1A014033	1.23
16405	2.02	179057	2.17	1A014592	1.23
16405	2.06	180431	2.08	1A014753	PLATE-24.B
16405	2.06	181746	2.12	1A015065	PLATE-24.A
16410	1.23	181747	2.12	1A016604	1.20
16410	1.25	182660R	2.03	1A016964	1.20
16410	1.25	182661R	2.03	1A017147	PLATE-24.A
16410	2.07	182662	2.03	1A017153	PLATE-24.A
16410	2.07	182663	2.03	1A017154	PLATE-24.A
16410	2.08	183077	2.03	1A017155	PLATE-24.A

142

Print Date: 07-Apr-2022

PART NO	BLOCK	PART NO	BLOCK	PART NO	BLOCK
1A017156	PLATE-24.A	20106	1.24	231370	2.07
1A017157	PLATE-24.A	20106	2.05	231370	2.07
1A017158	PLATE-24.A	20106	2.05	237246	2.07
1A017159	PLATE-24.A	20106	2.09	2383	1.25
1A017160	PLATE-24.A	20108	2.10	243303R	2.07
1A017161	PLATE-24.A	20108	2.12	2438	2.09
1A017162	PLATE-24.A	20108	2.13	245038	2.16
1A017163	PLATE-24.A	20108	2.13	245038	2.17
1A019307	PLATE-24.B	20108	2.13	261323	2.11
1F000754	PLATE-24.1	20108	2.13	265091	1.25
1F000754	1.24	20108	2.14	267068	2.07
1F000755	PLATE-24.1	20108	1.23	272178	1.25
1F000755	PLATE-24.1	20108	1.23	272178	1.25
1F000755	1.24	20108	1.25	272178	1.25
1F0007564	1.20	20108	1.25	286328	1.25
1F000830	PLATE-24.B	20108	1.25	286328	1.25
1F000832	PLATE-24.1	20108	2.01	286328	1.25
1F000832	1.24	20108	2.02	286328	2.07
20104	2.13	20108	2.03	286406	PLATE-24.1
20104	1.23	20108	2.03	286406	1.24
20104	2.01	20108	2.05	288730	1.23
20104	2.06	20108	2.06	30072	2.02
20105	2.10	20108	2.06	30072	2.06
20105	2.12	20108	2.10	30072	2.06
20105	2.12	20110	1.25	30074	2.13
20105	2.12	20110	1.25	30074	2.13
20105	2.12	20110	2.07	30074	2.14
20105	2.14	20110	2.08	30074	2.03
20105	1.23	20110	2.09	30077	2.09
20105	1.25	20359	2.07	30103	2.09
20105	2.02	21216	2.08	30209R	2.08
20105	2.06	220575	1.23	30242	2.03
20105	2.09	226596	2.07	30242	2.03
20106	2.11	226596	2.07	3055	2.11
20106	2.12	226661	2.07	3055	2.12
20106	2.12	226662	2.07	3055	2.12
20106	2.13	227403011R	1.23	3055	2.12
20106	2.13	227555010	1.23	3055	2.14
20106	2.14	227571014R	1.23	3055	1.25
20106	2.14	229524	2.10	3055	1.25
20106	PLATE-24.1	231370	1.23	3055	2.06
20106	PLATE-24.B	231370	1.25	3055	2.06
20106	1.19	231370	1.25	3056	2.12

143

Print Date: 07-Apr-2022

PART NO	BLOCK	PART NO	BLOCK	PART NO	BLOCK
3056	2.12	31089	2.14	567534	2.13
3056	2.13	31089	2.05	567535	2.13
3056	2.13	31089	2.09	567593	2.11
3056	2.15	31092	2.13	567690	2.10
3056	2.15	31092	PLATE-24.1	567700	2.12
3056	PLATE-24.1	31092	PLATE-24.B	567706	2.12
3056	PLATE-24.B	31092	1.23	567719	2.10
3056	1.20	31092	1.24	567732	2.13
3056	1.22	31092	2.05	567732	2.14
3056	1.23	31116	2.12	567741	1.20
3056	1.23	31116	2.13	567746G1	2.10
3056	1.24	31116	2.13	567898	2.10
3057	2.13	31116	2.15	567899	2.10
3057	2.14	31116	1.25	567920	2.10
3058	2.10	31118	2.10	567990	2.08
3058	2.12	31118	2.13	567991	2.08
3058	2.13	31118	1.25	567992	2.08
3058	2.13	31119	2.13	567993	2.08
3058	2.13	31119	2.14	568095	2.08
3058	2.14	31119	1.25	568107	2.13
3058	2.15	31119	2.02	568131	2.02
3058	1.25	31122	2.10	568131	2.05
3058	2.01	31154	1.23	568135	2.13
3058	2.02	31159	1.25	568135	2.06
3058	2.05	31159	2.07	568140	1.25
3068	2.07	414948	2.06	568154	2.02
31056	2.12	48197	2.08	568161	2.10
31056	1.18	485703	1.20	568260	1.25
31057	2.12	520221019R	1.20	568289	2.07
31058	2.12	520221019R	1.23	568325	2.13
31058	2.14	523011013R	1.21	568671	2.04
31058	2.03	523021018	1.21	568682	2.02
31058	2.06	566545	2.08	568689	1.25
31088	2.12	567454	2.03	568692	2.03
31088	2.13	567455	2.03	568714	2.12
31088	2.15	567456	2.03	568721	1.23
31088	2.15	567457	2.03	568737	2.10
31088	1.18	567458	2.03	568750	2.12
31088	1.23	567459	2.03	569150	2.08
31088	1.23	567461	2.10	569156	2.03
31088	2.05	567473	2.08	569157	2.03
31089	2.11	567484	2.15	569165	2.12
31089	2.13	567498R	2.12	569166	2.12

144

Print Date: 07-Apr-2022

PART NO	BLOCK	PART NO	BLOCK	PART NO	BLOCK
569193	2.03	604558	2.03	6177	2.03
569197	2.12	604560	1.22	62961	2.03
569241	1.25	604560	1.23	632109	1.18
569241	2.07	604560	2.03	632137	2.09
569244	1.25	604603	2.06	632148	2.17
569246R	2.08	604606	1.25	632158	2.09
569255	2.08	604606	2.02	632183	2.21
569377	1.25	604689	2.03	632184	2.21
5745	2.03	604690	2.03	632185	2.21
587616	2.16	604691	2.05	632238	2.03
587617	2.07	604707	2.03	632247	1.25
587633	2.10	604717	2.10	632285	2.12
587685	1.23	604717	2.09	632292	2.12
587687	1.23	604756	2.01	632299	1.25
587702	2.10	604758	2.08	632508	2.05
587803	2.09	604758	2.08	632667	1.19
587812	2.09	604759	2.08	632719	2.08
587822	2.10	604760	2.10	632995	2.12
587829	2.08	604812	2.03	632995	2.12
587849	2.02	604856	2.18	63440	2.16
587902	2.09	604868	2.01	63440	2.17
587904	2.09	604877	2.10	6411	2.10
587907	2.13	604880	2.10	64263	2.03
587928	2.10	604954	2.01	643616	2.12
587948	2.13	604954	2.05	643661	2.13
587961	2.06	604972	2.01	643661	2.14
587962	2.13	605389	2.03	643684R	2.06
587962	2.06	60565	2.09	643685R	2.06
587963	2.02	6066	2.07	643691	2.04
587971	2.03	6066	2.08	643691	2.04
5969	2.10	6078	2.12	643692	1.25
6018	2.03	6078	2.12	643704R	2.12
602120	2.17	6078	1.25	643705R	2.12
602120	2.07	6078	1.25	643711R	1.25
602123	2.17	6078	2.03	643741	2.07
602123	2.07	6078	2.06	643752	2.13
602497	2.16	6125	2.09	643772R	2.08
602497	2.17	616541	2.16	643850	2.18
604502	2.10	616541	2.08	643882	2.21
604506	2.12	616649	2.05	643927	2.21
604506	2.12	616931	2.08	644812	2.10
604535	2.07	6173	2.10	644812	1.25
604557	2.12	6173	2.10	644813	2.10

145

Print Date: 07-Apr-2022

PART NO	BLOCK	PART NO	BLOCK	PART NO	BLOCK
644813	1.25	661267	2.07	6B000121	2.13
644814R	1.25	661282	2.07	6B000189	2.13
644814R	2.08	661282	2.08	6B000207	2.01
644824	1.18	661399	2.20	6B000208	2.03
644837R	2.15	661493	2.13	6B001305BW	2.02
644838R	2.15	661493	2.06	6B001305CB	2.02
644839R	1.25	661573ED	1.25	6B001305CO	2.02
644852	2.02	661634	2.06	6B001305EG	2.02
644973R	2.03	661635	2.06	6B001305GY	2.02
644979	2.06	661909	2.22	6B001305PA	2.02
645034	1.19	661925	2.12	6B001305PB	2.02
645041	2.12	661925	2.04	6B001306BW	2.02
645081	2.06	662323	2.14	6B001306CB	2.02
645081	2.06	662465	1.19	6B001306CO	2.02
6450	1.23	662476	1.25	6B001306EG	2.02
645124	2.09	662476	1.25	6B001306GY	2.02
645141	2.06	662567	2.09	6B001306PA	2.02
652124	PLATE-24.1	662571	1.18	6B001946	2.01
652124	1.24	6650	2.07	6B001946	2.06
652520	2.07	6733	2.08	6B001947	2.01
652520	2.08	6965	2.12	6C000016	1.23
652521	2.08	6965	2.12	6C000041	1.23
659805	2.09	6965	2.03	6C000060	2.07
659842	1.20	6A000014	2.21	6C000190	2.08
659857	2.18	6A000115	1.20	6C000191	2.08
659862	2.18	6A000233	1.18	6C000312R	1.23
660109	2.12	6A000822	1.19	6C000362	2.07
660141	2.09	6A000823	1.19	6C000363	2.07
660168	2.11	6A000824	1.19	6C000382	1.25
660168	1.18	6A000825	1.19	6C000383	1.25
660168	2.01	6A000826	1.19	6C000662	2.07
660207ED	2.13	6A000827	1.19	6D000015R	2.12
660207ED	2.14	6A001046R	2.09	6D000018	2.15
660340	2.09	6A001047R	2.09	6D000019	2.15
660356	2.10	6A001657	1.18	6D000143R	2.11
660358	2.10	6B000091BW	2.14	6D000144R	2.11
660931	2.07	6B000091CB	2.14	6D000145R	2.11
660931	2.08	6B000091CO	2.14	6D000146R	2.11
661231	2.12	6B000091EG	2.14	6D000407	2.18
661231	2.08	6B000091GY	2.14	6D000410	2.15
661262	2.13	6B000091PA	2.14	6D000410	2.18
661262	2.14	6B000091PB	2.14	6D000411	2.18
661266	2.07	6B000119	2.13	6D001087	1.18

146

Print Date: 07-Apr-2022

PART NO	BLOCK	PART NO	BLOCK	PART NO	BLOCK
7066R	1.23	843000809	PLATE-24.B	929925	2.21
71633	2.12	843000809	1.24	929931	2.20
71633	2.12	8432	2.13	929933	2.20
71633	2.14	8432	2.13	929934	2.20
74521	2.08	8432	2.06	929935	2.20
75708	2.08	8451	2.12	929936	2.20
7608	2.09	8451	2.03	929938	2.20
76227	2.06	87067	2.08	929939	2.20
77055	2.12	8771	2.08	929940	2.20
78307	2.11	880255211R	1.21	929948	2.21
78307	2.05	880305509R	1.23	929949	2.21
808000826	1.23	8808	2.03	932207	2.19
8080	2.11	884222808	1.21	932207	2.22
8080	2.04	8847	2.03	932208	2.19
811051525	1.23	89281	2.03	932208	2.22
811081025	1.20	9000	2.13	932209	2.22
822031942	PLATE-24.1	920008	2.22	932210	2.19
822031942	1.23	920012	2.21	932210	2.22
822031942	1.24	920083	2.12	932211	2.19
822051647	1.23	920084	2.12	932212	2.19
825080209	1.22	925212	2.12	932212	2.22
825080209	1.23	925501	2.16	932213	2.19
825123207	PLATE-24.1	925501	2.17	932214	2.19
825123207	PLATE-24.B	925508	2.10	932214	2.22
825123207	1.24	925509	2.10	932215	2.19
825420215	1.20	925521	2.16	932215	2.22
8265	2.14	925567	2.12	932216	2.19
8265	2.05	925571	2.12	932217	2.19
841005207	1.21	925572	2.12	932217	2.22
841005207	1.23	925581	2.11	932218	2.19
841005506	1.23	925581	2.12	932218	2.22
842001507	2.10	925584	2.12	932219	2.19
842001507	1.21	925585	2.12	932219	2.22
842001600	PLATE-24.1	925589	2.12	932220	2.19
842001600	PLATE-24.B	925604	2.12	932220	2.22
842001600	1.24	925605	2.12	932221	2.19
842002501	1.21	925737	2.21	932221	2.22
842002501	1.23	925743	2.21	932222	2.19
842003000	1.23	925768	2.19	932222	2.22
842004808	1.21	925768	2.22	932224	2.19
843000500	1.23	925781	2.19	932224	2.22
843000809	2.10	925781	2.22	932225	2.19
843000809	PLATE-24.1	925783	2.22	932225	2.22

147

Print Date: 07-Apr-2022

PART NO	BLOCK	PART NO	BLOCK	PART NO	BLOCK
932226	2.19	940004	2.16	B018991	1.23
932226	2.22	940005	2.17	B019220	PLATE-24.1
932227	2.19	940005	2.17	B019220	PLATE-24.B
932227	2.22	940006	2.17	B019220	PLATE-24.B
932228	2.19	940006	2.17	B019220	1.24
932228	2.22	940048	1.08	B023727R	2.12
932229	2.19	940048	1.02	B023890	1.24
932229	2.22	940048	1.07	B024131	2.18
932230	2.19	940064	2.21	B024131	2.20
932230	2.22	97756	2.13	B024147	2.18
932231	2.19	97756	2.03	B024169	2.04
932231	2.22	97756	2.03	B024174	2.21
932232	2.19	97756	2.09	B024179	2.05
932232	2.22	B001386	2.02	B024373	2.07
932233	2.20	B001844	1.20	B024379	PLATE-24.1
932235	2.20	B001954R	2.03	B024379	1.24
932236	2.20	B002630	1.18	B024379	2.09
932237	2.20	B002847	2.03	B024501	2.13
932238	2.20	B002848	2.03	B024614	1.23
932239	2.20	B002974	2.02	B024614	1.25
932240	2.19	B003115	1.18	B024732	2.08
932240	2.20	B003208	1.23	B024733	2.03
932240	2.22	B003228	2.08	B024734	2.03
932241	2.20	B003282	1.18	B024774	2.09
932242	2.19	B003784	2.16	B024775	2.09
932242	2.20	B003784	2.17	B024855	2.06
932242	2.22	B003864	2.03	B04100R	2.12
932243	2.20	B003865	2.03	B041392	2.01
932252	2.18	B003924	1.21	B041491	2.21
932254	2.19	B006559	1.19	B041600	2.09
932255	2.19	B006560	1.19	B041600	2.09
932255	2.22	B006561	1.19	B041784	2.18
932263	2.22	B006562	1.19	B041784	2.20
932264	2.22	B008167	2.05	B041852	1.18
932265	2.19	B008400	2.13	B041853	1.18
932268	2.21	B008402	2.14	B042199	2.18
932270	2.22	B009290	2.12	B042199	2.21
932273	2.18	B009701	2.13	B042317	2.10
932274	2.18	B009701	2.13	B042486	1.23
932275	2.18	B009701	2.06	B042505ED	2.14
932276	2.18	B016611	1.20	B042513ED	2.14
932306	2.21	B016611	1.20	B042612	2.06
940004	2.16	B016611	1.22	B042657R	2.18

148

Print Date: 07-Apr-2022

PART NO	BLOCK	PART NO	BLOCK	PART NO	BLOCK
B042726ED	2.13	B075852	2.10	B077287	1.19
B042750	2.21	B075964	2.01	B077300BW	2.01
B042794	2.10	B075974	2.11	B077300BY	2.01
B042798	1.20	B075974	2.05	B077300EG	2.01
B042798	1.23	B075982	2.18	B077300GY	2.01
B042799	1.20	B075989	2.01	B077300WR	2.01
B042799	1.23	B075999	2.11	B077322	1.18
B042814	2.03	B076000	2.11	B077324	1.18
B073024	2.21	B076001	2.11	B077325	1.18
B073084	2.21	B076098ED	2.02	B077325	1.18
B073085	2.21	B076120	2.11	B077327PC	2.13
B073127	2.03	B076120	2.05	B077358	2.13
B073274	2.13	B076191	2.11	B077358	2.14
B073275	2.13	B076304	2.12	B077513	2.21
B073320R	2.15	B076306	2.09	B078218	2.15
B073478R	2.04	B076307	2.09	B078218	2.21
B073479R	2.04	B076329	2.09	B078260	2.15
B073481R	2.04	B076330	2.09	B078285	1.01
B073810	2.04	B076573	2.12	B078286R	2.11
B073811	2.04	B076574	2.12	B078314	2.04
B073812	2.04	B076605	2.11	B078338	1.19
B073814	2.04	B076606	2.11	B078353	2.18
B073815	2.04	B076801	2.11	B078470	2.18
B073816	2.04	B076801	2.05	B078480	2.04
B073850R	2.12	B076802	2.11	B078532R	2.09
B073953	2.11	B076802	2.05	B078533R	2.09
B074033	2.11	B076808R	2.09	B078549BW	2.02
B074173	2.03	B076859	2.08	B078549CB	2.02
B074262	2.04	B076870R	2.09	B078549CO	2.02
B074275	2.04	B076871R	2.09	B078549EG	2.02
B074539	2.11	B076873SP	2.08	B078549GY	2.02
B074637	2.01	B076881	1.20	B078549PA	2.02
B074657	2.01	B077239	1.19	B078549PB	2.02
B074851	2.21	B077240	1.19	B078639	2.21
B074855	2.18	B077246	1.19	B078642	2.21
B074905	2.04	B077247	1.19	B078657	2.21
B075313	2.09	B077248	1.19	B078745BW	2.01
B075426	2.21	B077257	1.19	B078745BY	2.01
B075444	2.13	B077260	2.15	B078745EG	2.01
B075636	2.21	B077261	2.15	B078745GY	2.01
B075638	2.18	B077271	1.18	B078745WR	2.01
B075687	2.09	B077277	1.18	B078870	2.03
B075732	2.04	B077284	1.25	B078870	2.05

149

Print Date: 07-Apr-2022

PART NO	BLOCK	PART NO	BLOCK	PART NO	BLOCK
B078872	2.05	E1177001	1.09	E40005439	1.12
B078876	2.03	E1756507	1.12	E40005442	1.14
B078876	2.05	E1756507	1.12	E40005592	1.12
B078878	2.01	E1756507	1.13	E40005609	1.15
B078878	2.05	E200467003	1.09	E400060112	1.11
B078913	2.05	E200467003	1.09	E40006212	1.03
B078927	2.03	E200467021	1.09	E40006213	1.05
B078927	2.05	E250467014	1.02	E40006217	1.15
B078927	2.05	E250755504	1.10	E40006221	1.15
B078929	2.03	E250755507	1.07	E40006431	1.15
B078929	2.05	E260120016	1.09	E40006482	1.13
B079129BW	2.13	E260467001	1.13	E40006653	1.05
B079129CB	2.13	E260908037	1.13	E40006842	1.13
B079129CO	2.13	E260973027	1.09	E40008724	1.13
B079129EG	2.13	E26756503	1.12	E40009648	1.12
B079129GY	2.13	E270973010	1.12	E40009683	1.10
B079142BW	2.14	E270973010	1.13	E40009683	1.10
B079142CB	2.14	E270973010	1.02	E40009712	1.02
B079142CO	2.14	E271678054	1.02	E40010839	1.15
B079142EG	2.14	E276846055	1.02	E40010859	1.13
B079142GY	2.14	E283467036	1.13	E40010865	1.13
B079142PA	2.14	E3124017	1.03	E40011420PA	1.03
B079142PB	2.14	E34A130001	1.14	E40011772	1.07
B079368	2.21	E34A140001	1.17	E40012004	1.03
B079368	2.22	E34A140002	1.17	E40012259	1.04
B079402	2.18	E34G070003	1.16	E40012260	1.04
B079402	2.19	E34G130002	1.04	E40012578	1.02
BS4 1A010093	1.20	E34K120005	1.13	E40015133	1.11
BS4 1A010093	1.23	E34K120006	1.13	E40015134	1.11
D9166140616	1.19	E34M140001	1.17	E40015443	1.14
E07500508	1.04	E34M140002	1.17	E40015456	1.12
E07502804	1.08	E34M140003	1.17	E40015458	1.12
E07502810	1.15	E40000711	1.15	E40015460	1.14
E07502810	1.16	E40001797	1.12	E40015461	1.14
E07502810	1.16	E40001816	1.09	E40015465	1.14
E07502811	1.12	E40002096	1.03	E40015466	1.14
E07518638	1.17	E40002263	1.02	E40016141	1.02
E07518639	1.17	E40002264	1.02	E40016404	1.02
E07518641	1.17	E40002265	1.02	E40016404	1.03
E07518642	1.17	E40002266	1.02	E40018082	1.04
E105324008	1.11	E40002267	1.02	E40019549	1.12
E106320002	1.14	E40002407	1.05	E40020430	1.04
E10G140001	1.12	E40002829	1.12	E40020562	1.03

150

Print Date: 07-Apr-2022

PART NO	BLOCK	PART NO	BLOCK	PART NO	BLOCK
E40020563	1.03	E50006495029	1.09	E9177006	1.12
E40020564	1.03	E50008099	1.02	E91901030	1.13
E40022216	1.04	E50008883	1.02	E93240076	1.04
E40024023	1.04	E50009023	1.06	E9324018	1.07
E40026133	1.03	E50009205	1.06	E97626043	1.12
E40026168	1.13	E500125708A	1.06	E97626065	1.11
E40027136	1.13	E500141016	1.11	E97626065	1.04
E40027779	1.16	E500197087	1.02	E99732047	1.02
E40028324	1.04	E500220013	1.10	ED23672	1.13
E40028329	1.04	E500228048	1.06	ED30956	1.11
E40036136	1.05	E500324066	1.10	ED33240	1.02
E4005616	1.15	E5003430070	1.04	ED33369	1.02
E43502821	1.16	E500405518	2.03	ED33454	1.04
E43506184	1.04	E5005271054	1.11	ED33683	1.13
E43520139	1.06	E500575545	1.04	ED33733	1.13
E43521745	1.08	E500575549	1.09	ED40165	1.11
E43526147	1.13	E500755006	1.11	ED41208	1.09
E43526147	1.16	E500843036	1.02	ED41447	1.09
E45762512	1.12	E500900038	1.06	ED42244	1.09
E47124004	1.11	E500985048	1.11	ED42548	1.07
E47177007	PLATE-24.1	E52006205	1.02	ED42723	1.02
E47177007	1.12	E52006709	1.10	ED43673	1.13
E47177007	1.24	E52200434	1.12	ESK4336	1.08
E50000160A	1.06	E53002206	1.07	ESK8801	1.12
E50000225	1.13	E53002207	1.07	ESK8832	1.07
E50000307A	1.06	E53002208	1.07	ESP650DNB011	1.12
E50000421	1.02	E53002209	1.07	ESP650DNB011	1.13
E50000437	1.10	E53002210	1.07	ESP650DNB011	1.15
E50000475	1.09	E5406045038	1.11	ESP650DNB020	1.05
E50000506	1.02	E5406850106	1.02	KIT940003R	2.08
E50000506	1.04	E5406850108	1.02	KIT95021R	2.08
E50000613	1.09	E5408480091A	1.03	KIT95022R	2.08
E50000911	1.03	E5609680013	1.09	KIT95117R	PLATE-24.A
E50001213143	1.09	E60008721	1.17	KIT96033R	2.08
E50002296A	1.06	E60016181	1.13	KIT96037R	2.13
E50002805	1.02	E6193361721	1.12	KIT96044R	1.19
E50002805	1.15	E87000496	1.12	NS-	1.23
E50002805	1.02	E87022230	1.04	NS-	1.23
E50002805	1.05	E87026113	1.16	NS	PLATE-24.1
E50005625006	1.09	E90303028	1.08	NS	1.18
E50006060	1.06	E904120213	1.09	NS	1.18
E50006328	1.08	E904850603	1.05	NS	1.18
E50006342	1.04	E9121356	1.08	NS	1.04

151