Parts Catalog

Commercial Vehicle

ape Auto DX 230 CC CNG LPG BS-VI

PIAGGIO VEHICLES PRIVATE LIMITED
Registered Office: Bund Garden Road ,Opp. Residency Club , Pune (India)

Print Date: 07-Apr-2022

PLATES INDEX

Sr No.	Plate Name	Plate No.	Page No.
1	Engine Assembly	1	1-2
2	COUPLED CRANKCASE	2	3-6
3	CRANKSHAFT	3	7-8
4	Cylinder Piston Group	4	9-10
5	CYLINDER HEAD UNIT - VALVE	5	11-12
6	ROCKER LEVERS SUPPORT UNIT	6	13-14
7	CYLINDER HEAD COVER	7	15-16
8	OIL PUMP	8	17-18
9	STARTER - ELECTRIC STARTER	9	19-20
10	FLYWHEEL_A.C GENERATOR ASSY.	10	21-22
11	FAN COVER & SHROUD ASSY.	11	23-24
12	GEAR-BOX COMPONENTS & GEAR SHIFTER	12	25-26
13	CLUTCH ASSY & CLUTCH COVER	13	27-28
14	DIFFERENTIAL	14	29-30
15	AIR FILTER ASSEMBLY	15	31-32
16	FUEL INJECTION SYSTEM - CARBURETOR - GAS	16	33-34
17	CARBURETOR CHILD PARTS	17	35-36
18	SILENCER	18	37-38
19	COMPLETE H.T. COIL	19	39-40
20	Main frame Assly & Passanger Body & Doors Ape Auto Dx (D+3)	20	41-44
21	TOOLS AND WHEELS	21	45-46
22	ENGINE MOUNTING	22	47-48
23	Windshield /Glass/ Seats/ Carpets/Mirrors &Engine Door.	23	49-52
24	Hood frame MUDGUARD	24	53-54
25	FUEL TANK/FILTER/FUEL PIPES - GAS	25	55-56
26	DASHBOARD ASSLY COMPLETE & LOCK SET	26	57-58
27	HANDLEBARS	27	59-60
28	WINDSCREEN WIPER	28	61-62
29	SELECTORS - SWITCHES - BUTTONS	29	63-64
30	ELECTRICAL DEVICES / HEAD LAMP & TAIL LAMP ASSLY.	30	65-68

Print Date: 07-Apr-2022

PLATES INDEX

Sr No.	Plate Name	Plate No.	Page No.
31	STEERING COLUMN & FRONT SUSPENSION	31	69-72
32	REAR SUSPENSION - SHOCK ABSORBER/S & ENGINE SUPPORT	32	73-76
33	DRIVE SHAFT & BELLOW	33	77-78
34	CABLES	34	79-80
35	TMC & BRAKING SYSTEM & TUBES	35	81-82
36	CONTROL PEDALS - LEVERS	36	83-84
37	WIRING HARNESS	37	85-86
38	ELECTRICAL DEVICES & BATTERY MOUNTING	38	87-90
39	LPG KIT	39	91-94
40	FRONT BRAKE ASSEMBLY SELF ADJUSTING (DIA 180 X 40 MM)	40	95-96
41	REAR BRAKE ASSEMBLY SELF ADJUSTING (DIA 180 X 40 MM)	41	97-98
42	CNG Kit 40 Ltrs._front (cabin) side regulator Mtg.	42	99-102
43	CNG KIT 40 Ltrs._for Rear side regulator Mounting (long member)	43	103-104
44	CNG Cylinder Mtg. for 40 Ltrs._ Rear side regulator Mounting(long member)	44	105-106

Print Date: 07-Apr-2022

PICTORIAL PLATES INDEX

PLATE-1 **Engine Assembly**

Page No. :1-2

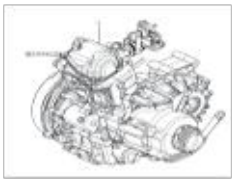

PLATE-2 **COUPLED CRANKCASE**

Page No. :3-6

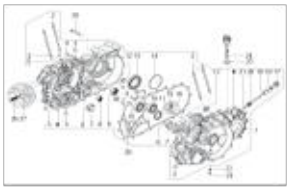

PLATE-3 **CRANKSHAFT**

Page No. :7-8

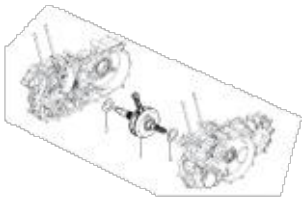

PLATE-4 **Cylinder Piston Group**

Page No. :9-10

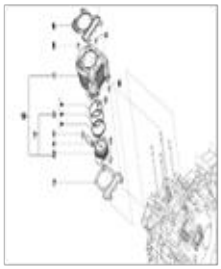

PLATE-5 **CYLINDER HEAD UNIT - VALVE**

Page No. :11-12

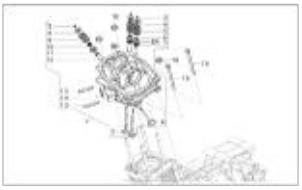

PLATE-6 **ROCKER LEVERS SUPPORT UNIT**

Page No. :13-14

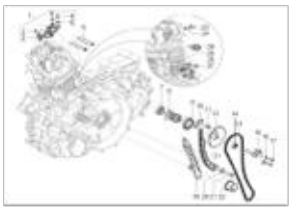

PLATE-7 **CYLINDER HEAD COVER**

Page No. :15-16

PLATE-8 **OIL PUMP**

Page No. :17-18

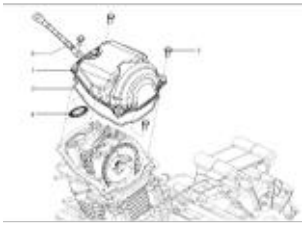

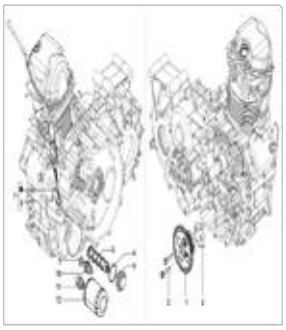

Print Date: 07-Apr-2022

PICTORIAL PLATES INDEX

PLATE-9 STARTER - ELECTRIC STARTER

Page No. :19-20

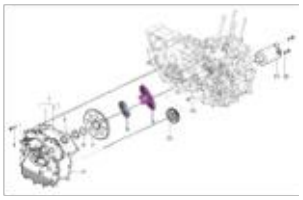

PLATE-10 FLYWHEEL_A.C GENERATOR ASSY.

Page No. :21-22

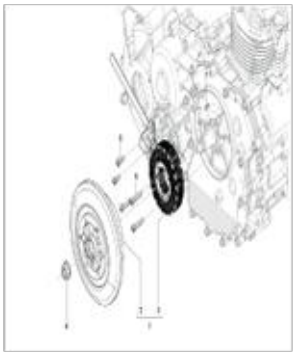

PLATE-11 FAN COVER & SHROUD ASSY.

Page No. :23-24

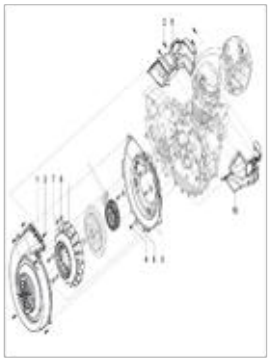

PLATE-12 GEAR-BOX COMPONENTS & GEAR SHIFTER

Page No. :25-26

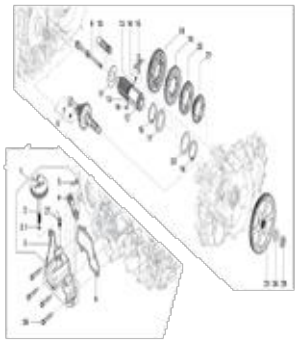

PLATE-13 CLUTCH ASSY & CLUTCH COVER

Page No. :27-28

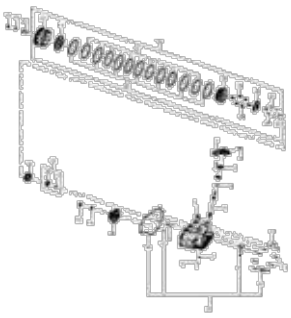

PLATE-14 DIFFERENTIAL

Page No. :29-30

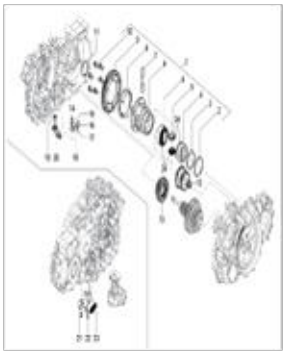

PLATE-15 AIR FILTER ASSEMBLY

Page No. :31-32

PLATE-16 FUEL INJECTION SYSTEM - CARBURETOR - GAS

Page No. :33-34

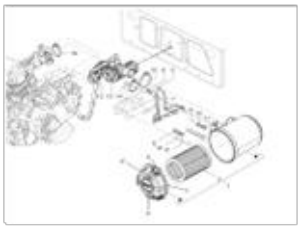

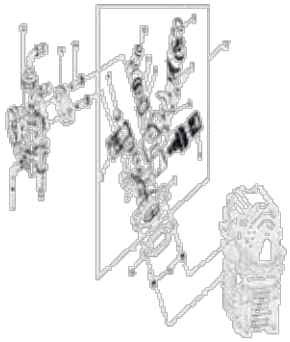

Print Date: 07-Apr-2022

PICTORIAL PLATES INDEX

PLATE-17 CARBURETOR CHILD PARTS

Page No. :35-36

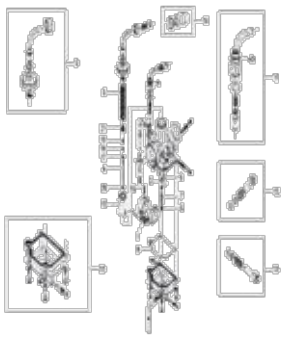

PLATE-18 SILENCER

Page No. :37-38

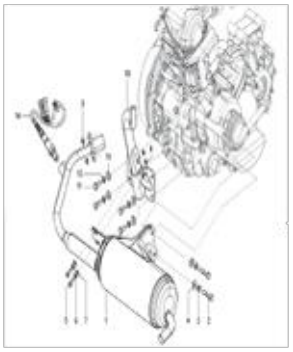

PLATE-19 COMPLETE H.T. COIL

Page No. :39-40

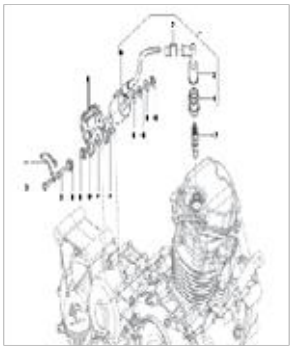

PLATE-20 Main frame Assly & Passanger Body & Doors Ape Auto Dx (D+3)

Page No. :41-44

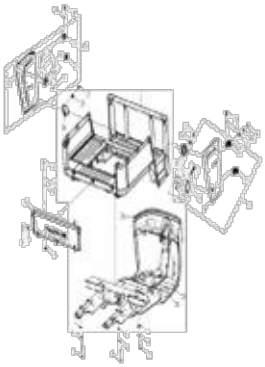

PLATE-21 TOOLS AND WHEELS

Page No. :45-46

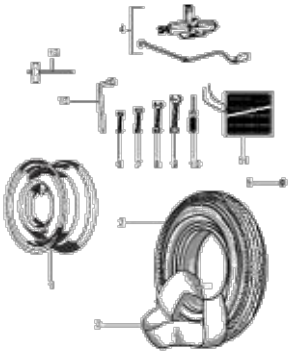

PLATE-22 ENGINE MOUNTING

Page No. :47-48

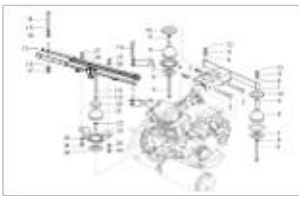

PLATE-23 Windshield /Glass/ Seats/ Carpets/Mirrors &Engine Door.

Page No. :49-52

PLATE-24 Hood frame MUDGUARD

Page No. :53-54

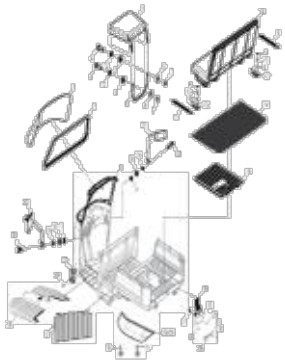

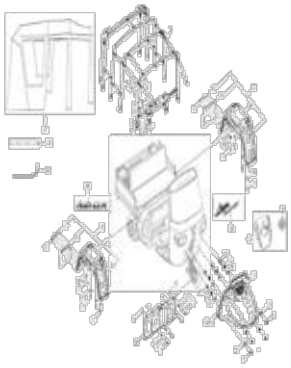

Print Date: 07-Apr-2022

PICTORIAL PLATES INDEX

PLATE-25 **FUEL TANK/FILTER/FUEL PIPES - GAS**
Page No. :55-56

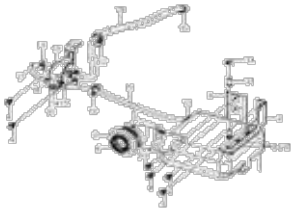

PLATE-26 **DASHBOARD ASSLY COMPLETE & LOCK SET**
Page No. :57-58

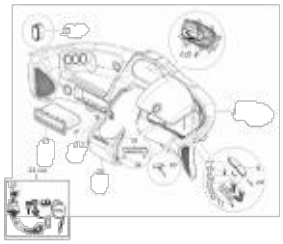

PLATE-27 **HANDLEBARS**
Page No. :59-60

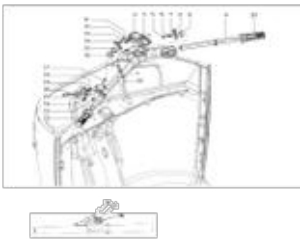

PLATE-28 **WINDSCREEN WIPER**
Page No. :61-62

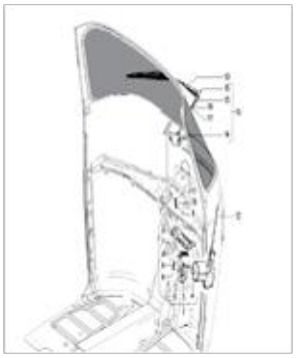

PLATE-29 **SELECTORS - SWITCHES - BUTTONS**
Page No. :63-64

PLATE-30 **ELECTRICAL DEVICES / HEAD LAMP & TAIL LAMP ASSLY.**
Page No. :65-68

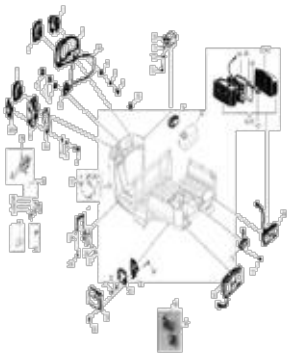

PLATE-31 **STEERING COLUMN & FRONT SUSPENSION**
Page No. :69-72

PLATE-32 **REAR SUSPENSION - SHOCK ABSORBER/S & ENGINE SUPPORT**
Page No. :73-76

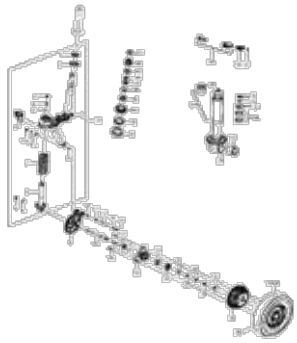

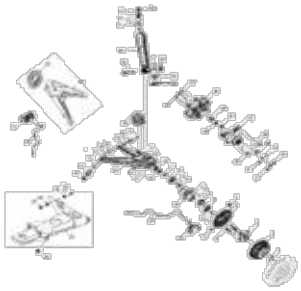

Print Date: 07-Apr-2022

PICTORIAL PLATES INDEX

PLATE-33 DRIVE SHAFT & BELLOW

Page No. :77-78

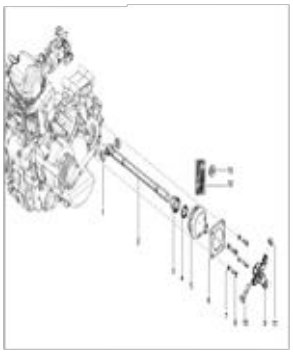

PLATE-34 CABLES

Page No. :79-80

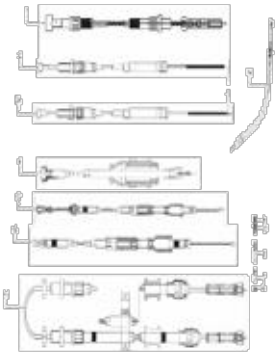

PLATE-35 TMC & BRAKING SYSTEM & TUBES

Page No. :81-82

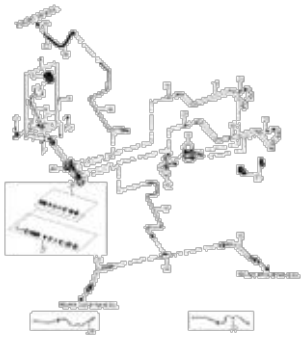

PLATE-36 CONTROL PEDALS - LEVERS

Page No. :83-84

PLATE-37 WIRING HARNESS

Page No. :85-86

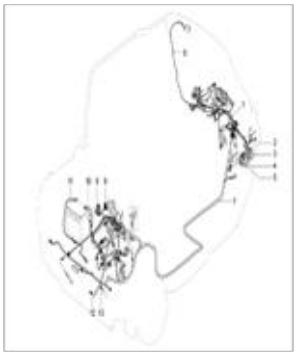

PLATE-38 ELECTRICAL DEVICES & BATTERY MOUNTING

Page No. :87-90

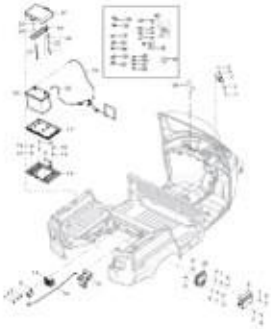

PLATE-39 LPG KIT

Page No. :91-94

PLATE-40 FRONT BRAKE ASSEMBLY SELF ADJUSTING (DIA 180 X 40 MM)

Page No. :95-96

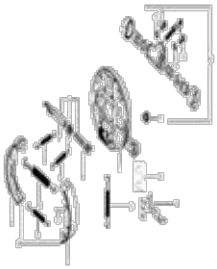

Print Date: 07-Apr-2022

PICTORIAL PLATES INDEX

PLATE-41 **REAR BRAKE ASSEMBLY SELF ADJUSTING (DIA 180 X 40 MM)**
Page No. :97-98

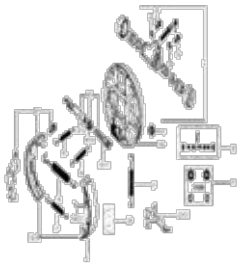

PLATE-42 **CNG Kit 40 Ltrs._front (cabin) side regulator Mtg.**
Page No. :99-102

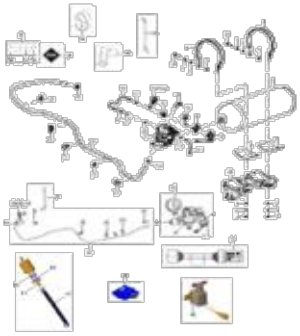

PLATE-43 **CNG KIT 40 Ltrs._for Rear side regulator Mounting (long member)**
Page No. :103-104

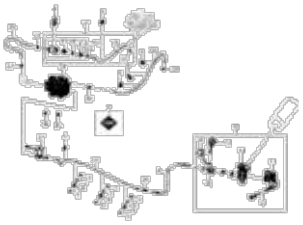

PLATE-44 **CNG Cylinder Mtg. for 40 Ltrs._ Rear side regulator Mounting(long member)**
Page No. :105-106

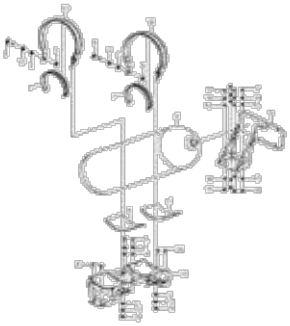

Print Date: 07-Apr-2022

PLATE-1

Engine Assembly

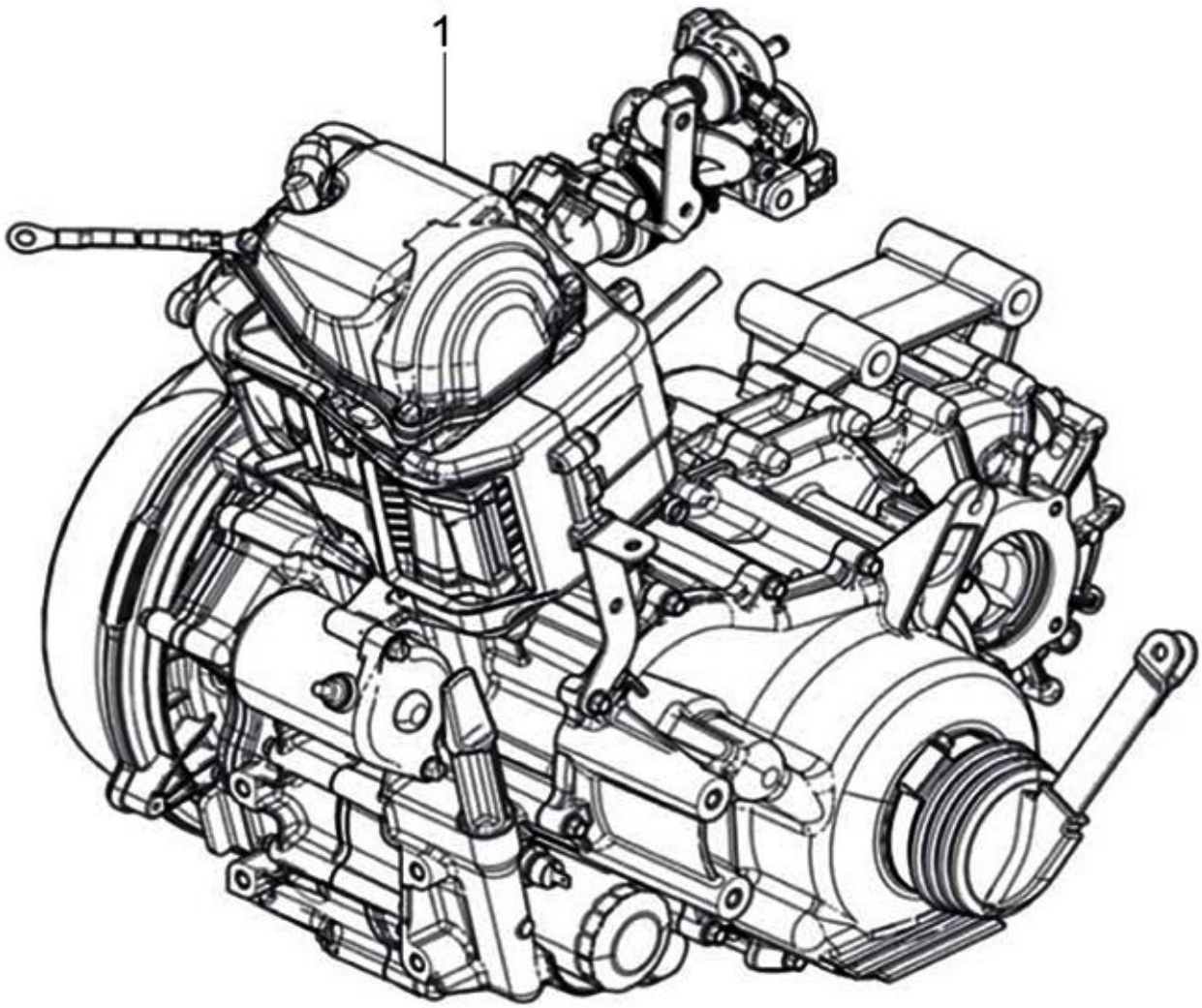
1

1

Print Date: 07-Apr-2022

PLATE-1

Engine Assembly

Fig. No.	Part No.	Description	Qty	Remarks
1	CM293912	ENG. 230 4S/3V BSVI APÉ AUTO 501 D+3 CNG	1	CNG
1	CM293911	ENG. 230 4S/3V BSVI APÉ AUTO 501 D+3 LPG	1	LPG

2

Print Date: 07-Apr-2022

PLATE-2
COUPLED CRANKCASE

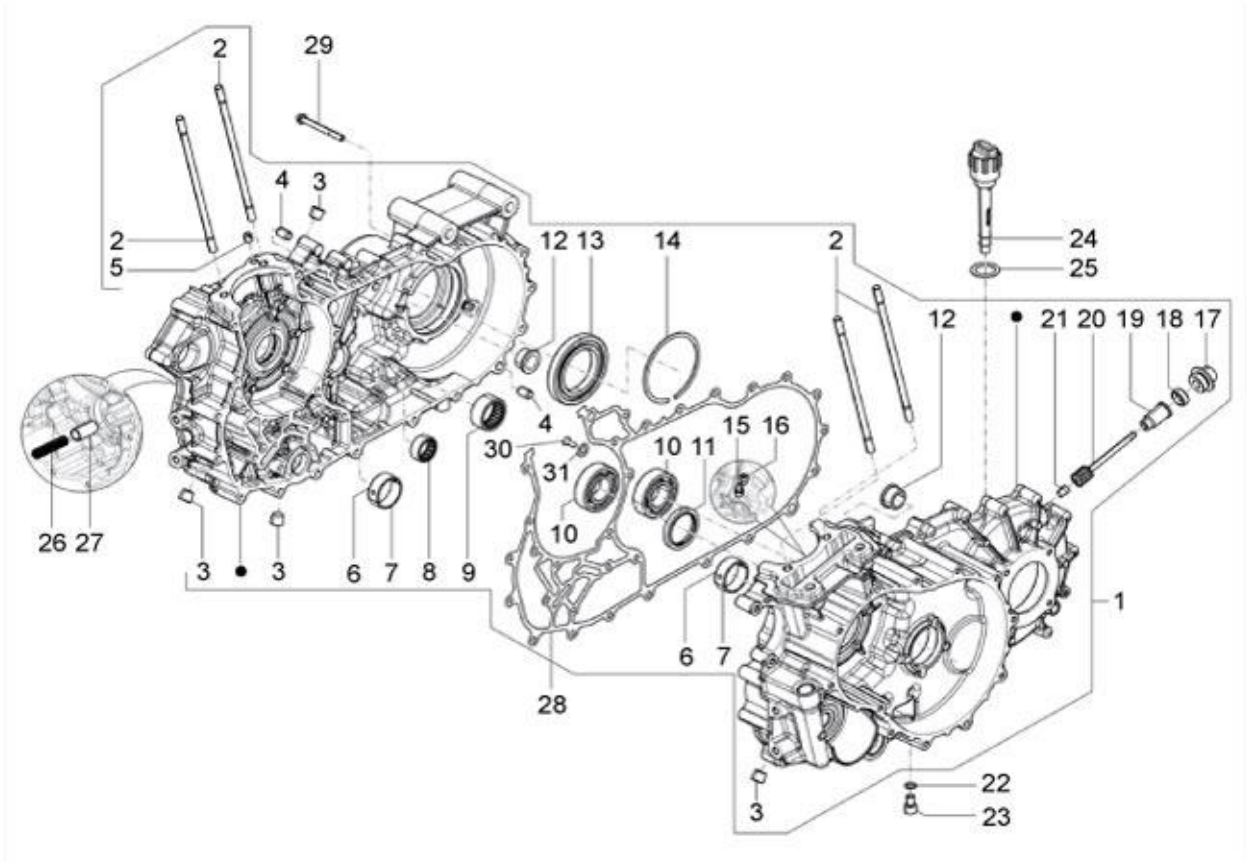
2
29
4
3
2
5
12 13
14
2
24
25
12
21 20 19 18 17
4
30
31
10 11
15 16
10
26 27
3
3
6 7 8 9
1
6 7
28
22
23
3

3

Print Date: 07-Apr-2022

PLATE-2
COUPLED CRANKCASE

Fig. No.	Part No.	Description	Qty	Remarks
1	SP1A007046	COMPLETE CRANKCASE- SPD	1	
2	B014755	STUD SCREW	4	
3	1A011246	TAPER THREAD PLUG	4	
4	B015592	REFERENCE DOWEL (D.9,5 H=15)	2	
5	1A007774	DOWEL	1	
6	1A007663R	CRANKSHAFT STUB UPPER HALF BEARING	1	Service on colorwise set KIT95007R/7Y/7B
7	1A007664R	CRANKSHAFT STUB LOWER HALF BEARING	1	Service on colorwise set KIT95007R/7Y/7B
8	884222808	NEEDLE BUSH 22X28X12	1	
9	1A007028	ROLLER BEARING	1	
10	1A007026	BALL BEARING	2	
11	1A002685	SEAL RING 35X47X6	1	
12	B042486	BUSH	2	
13	7066R	RADIAL BALL BEARING	1	
14	111353	CIRCLIP	1	
15	1A008823	PISTON COOLING JET	1	
16	1A000612	RETAINER SCREW - PRE COATED	1	
17	1A008559	BUSH (SPEEDOMETER GEAR)	1	
18	117402	OIL SEAL	1	
19	117401	BUSH	1	
20	1A010720	SPEEDOMETER GEAR	1	
21	165121014	PIN	1	
22	485703	WASHER	1	
23	269755	SOCKET HEAD SCREW (M8X12)	1	
24	112898	OIL LEVEL ARM WITH PLUG	1	
25	127016015	DIPSTICK SEALING WASHER	1	
26	485655	SPRING FOR OIL PRESSURE VALVE	1	
27	829661	OIL PRES.VALVE	1	
28	1A006856	HALF-CRANKCASES GASKET	1	
29	432142	HEXAGONAL RANGE HEAD SCREW (M6X35)	30	
30	1A016964	CSK PHILIPS HEAD SCREW	1	
31	1A011217	WASHER	1	
32	KIT95007R	CRANKSHAFT BEARING SET_RED COLOUR	1	Red color bearing set(consist Of sr no 6,7)
33	KIT95007Y	CRANKSHAFT BEARING SET_YELLOW COLOUR	1	Yellow color bearing set(consist Of sr no 6,7)
34	KIT95007B	CRANKSHAFT BEARING SET_BLUE COLOUR	1	Blue color bearing set(consist Of sr no 6,7)
35	KIT96028R	ENGINE GASKET SET APECITY BS3/4 STEP-2	1	NI

4

Print Date: 07-Apr-2022

PLATE-2
COUPLED CRANKCASE

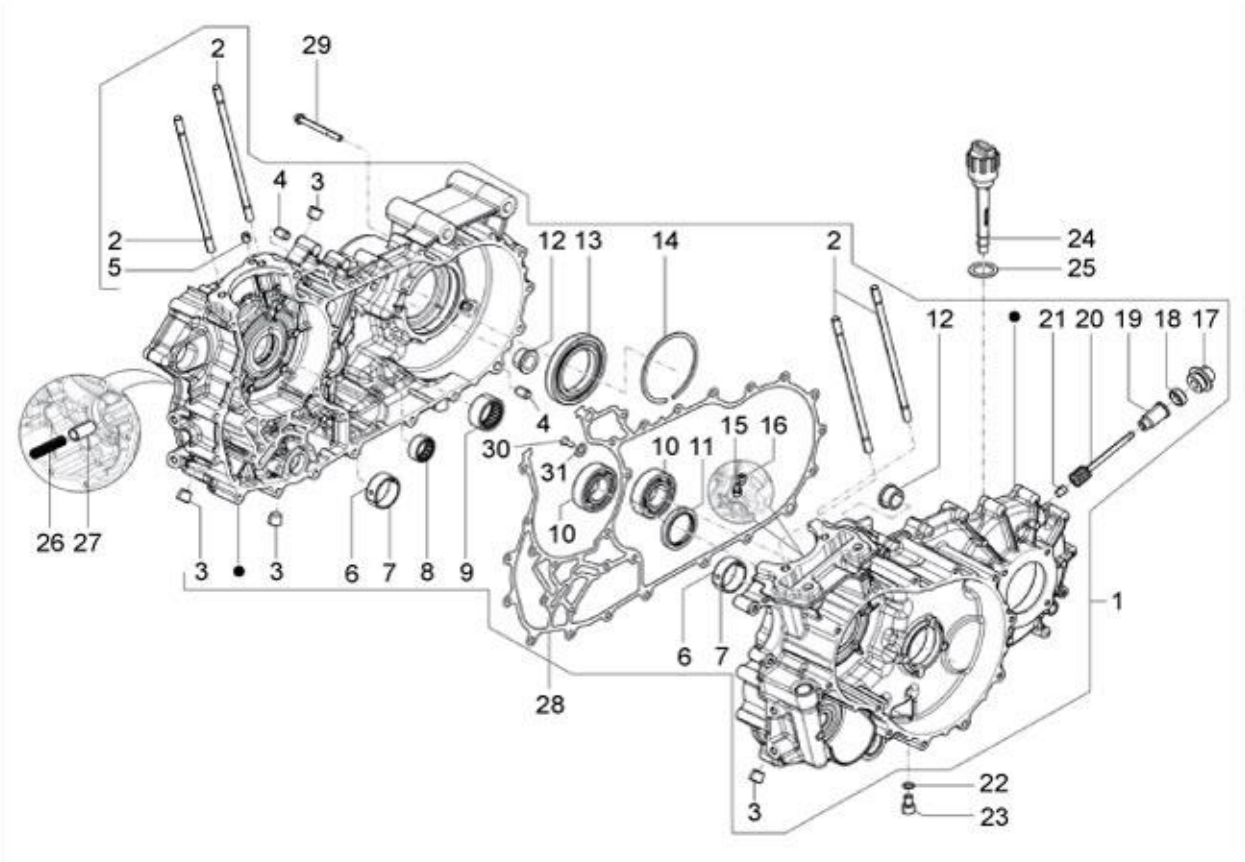
2
29
4
3
2
5
12 13
14
2
24
25
12
21 20 19 18 17
4
30
31
10 11
15 16
10
26 27
3
3
6 7 8 9
1
6 7
28
22
23
3

5

Print Date: 07-Apr-2022

PLATE-2
COUPLED CRANKCASE

Fig. No.	Part No.	Description	Qty	Remarks
36	KIT95105R	ENG.OIL SEAL SET APECITY-STEP-2 AND 230CC AF	1	NI

6

Print Date: 07-Apr-2022

PLATE-3
CRANKSHAFT

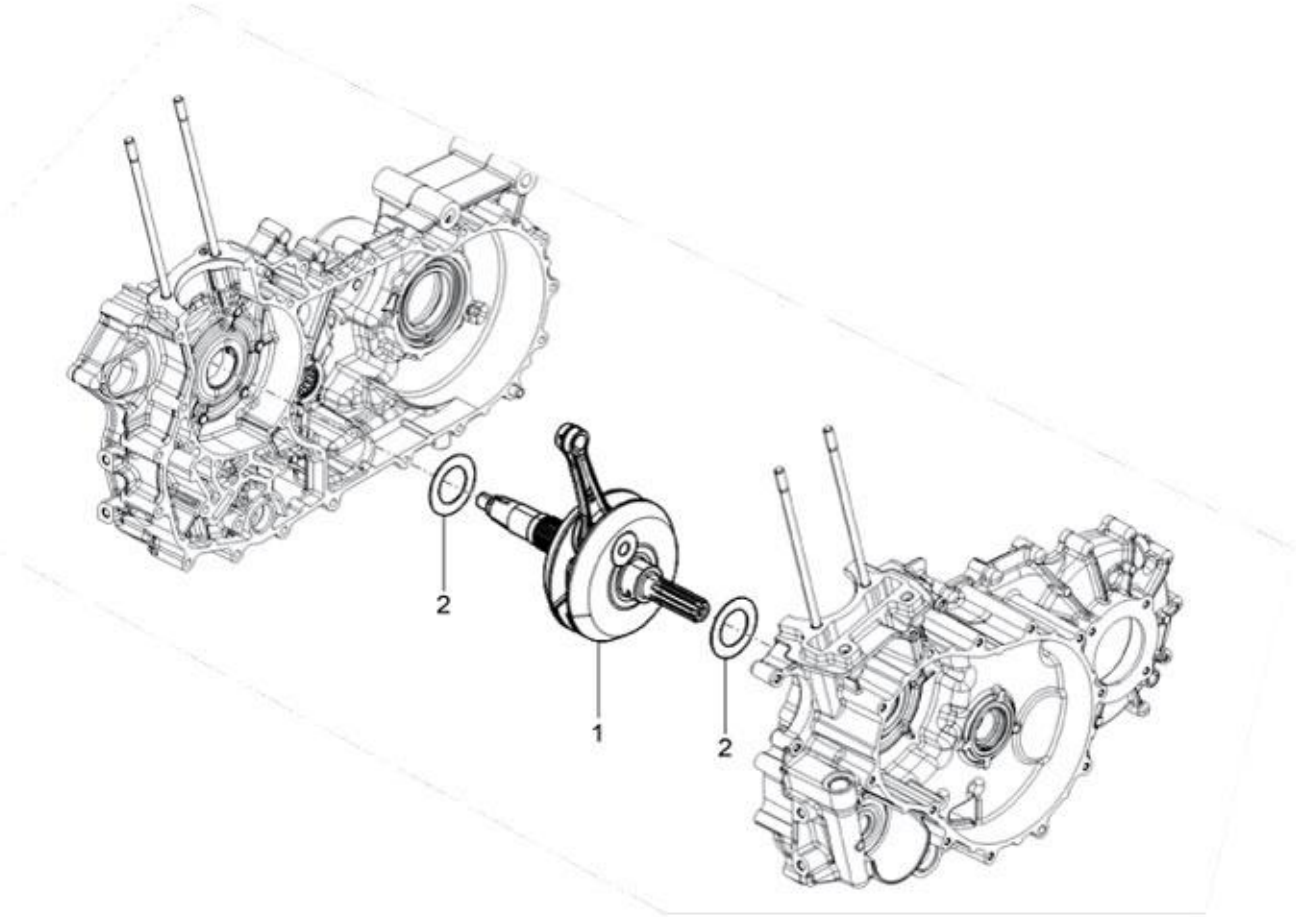
2
1
2

7

Print Date: 07-Apr-2022

PLATE-3
CRANKSHAFT

Fig. No.	Part No.	Description	Qty	Remarks
1	1A011066	CRANKSHAFT ASSEMBLY	1	
2	B016144	WASHER	2	

8

Print Date: 07-Apr-2022

PLATE-4

Cylinder Piston Group

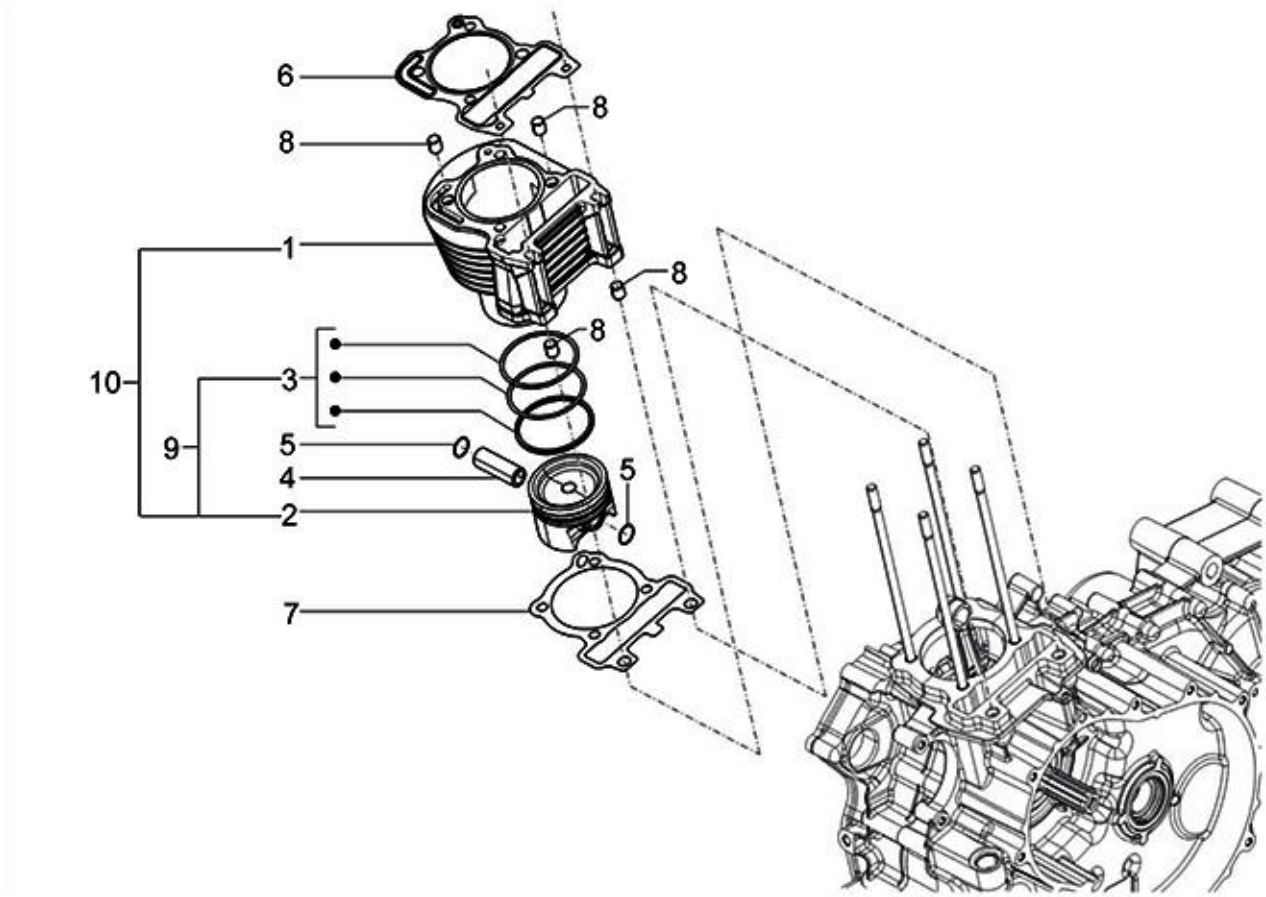
6
8
8
1
8
8
10
3
9
5
4
2
5
7

9

Print Date: 07-Apr-2022

PLATE-4

Cylinder Piston Group

Fig. No.	Part No.	Description	Qty	Remarks
1	SP1A005855	CYLINDER APE PAX SPD	1	PTL/CNG
2	1A017605	PISTON DIA62.6	1	CNG/LPG (Service on KIT96053R)
3	1A009621R	PISTON RING GROUP	1	
4	482335	PISTON PIN	1	
5	963486	CIRCLIP FOR PISTON WRIST	2	
6	B014555	HEAD CYLINDER GASKET	1	
7	CM284002	CRANKCASE/CYLINDER GASKET (0.6)	1	
7	CM284003	CRANKCASE/CYLINDER GASKET (0.8)	1	
7	CM284001	CRANKCASE/CYLINDER GASKET (0.4)	1	
8	435571	REFERENCE DOWEL	4	
9	KIT96053R	PISTON ASSY.APE CITYPLUS AND AUTO DX230_C/L_BS6	1	CNG/LPG,NS- Service under BP Kit
10	KIT96052R	B.P KIT 230 CC BSVI GAS	1	CNG/LPG

10

Print Date: 07-Apr-2022

PLATE-5

CYLINDER HEAD UNIT - VALVE

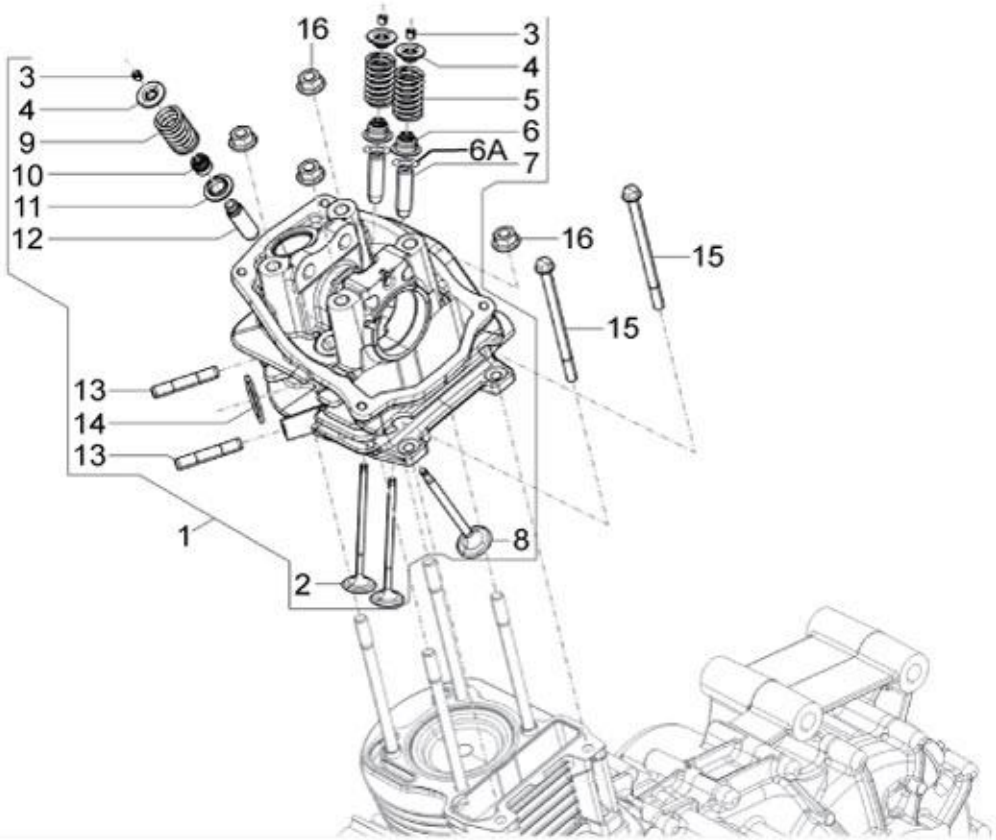
16
3
4
5
6
6A
7
3
4
9
10
11
12
16
15
15
13
14
13
1
8
2

11

Print Date: 07-Apr-2022

PLATE-5

CYLINDER HEAD UNIT - VALVE

Fig. No.	Part No.	Description	Qty	Remarks
1	SP1A017573	CYLINDER HEAD ASSY_SPD	1	
2	B014684	INTAKE VALVE Ø20	2	
3	B015288	HALF-CONE	6	
4	B017456	UPPER CUP	3	
5	B014706	VALVE SPRING (INTAKE)	1	
6	843307	VALVE SEAL RING	2	
6A	1A012925	SLIDING WASHER	2	
7	NS	NOT SERVICEABLE	2	
8	B017438	EXHAUST VALVE Ø22	1	
9	B014705	VALVE SPRING (EXHAUST)	1	
10	83054R	VALVE SEAL RING	1	
11	483711	LOWER CUP	1	
12	NS	NOT SERVICEABLE	1	
13	B016368	SPECIAL STUD	2	
14	434716	CYLINDER HEAD/MUFFLER GASKET	1	
15	B018854	HEXAGONAL HEAD FLANGED SCREW M6X90	2	
16	B016939	FLANGED NUT M8X1.25	4	
17	KIT1U000020	SET OF VALVES	1	NI (Consists Of Sr.NO.-2&8)
18	KIT95011R	VALVE SEAL RING SET	1	NI (Consists Of Sr.NO.-10&16)

12

Print Date: 07-Apr-2022

PLATE-6

ROCKER LEVERS SUPPORT UNIT

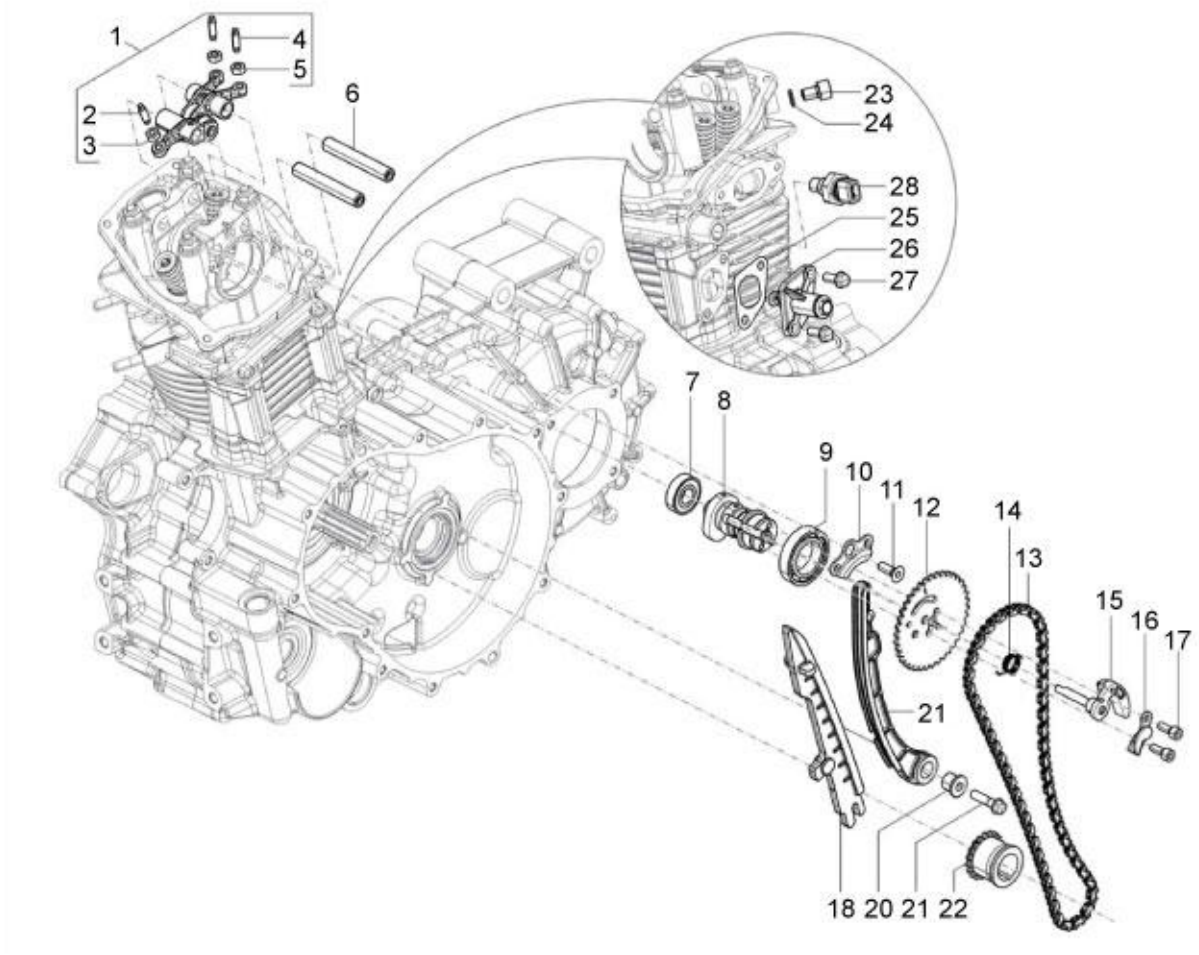
1
2
3
4
5
6
23
24
28
25
26
27
7
8
9
10
11
12
14
13
15
16
17
21
18
20
21
22

13

Print Date: 07-Apr-2022

PLATE-6

ROCKER LEVERS SUPPORT UNIT

Fig. No.	Part No.	Description	Qty	Remarks
1	1A013013	ROCKER ARM GROUP	1	
2	B017323	VALVE ADJUSTMENT SCREW	1	
3	B017431	ROCKER ARM NUT	1	
4	B017323	VALVE ADJUSTMENT SCREW	2	
5	B017431	ROCKER ARM NUT	2	
6	B017113	ROCKER ARM SHAFT	2	
7	83040R	DEEP GROOVE BALL BEARING	1	
8	B017746	CAMSHAFT WITH I.P.	1	
9	83041R	DEEP GROOVE BALL BEARING	1	
10	B014760	CAMSHAFT CONTAINMENT SHEET-STEEL	1	
11	B018946	COUNTERSUNK SCREW M6X18	1	
12	1A002358	TIMING CROWN	1	
13	1A015692	TIMING CHAIN SOUNDLESS TYPE	1	
14	B015483	DECOMPRESSION SPRING	1	
15	SP1A006405	CENTRIFUGAL MASS WITH I.P.	1	
16	1A008397	CENTRIFUGAL MASS CONTAINMENT SHEET	1	
17	B018718	EXAG. SOCKET CYLIND.HEAD SCREW M5X14	2	
18	1A006899	FIXED PAD	1	
19	1A006901	CHAIN TIGHTENING ROD	1	
20	485868	SPACER FOR CHAIN TIGHTNING ROD	1	
21	B016774	FLANGED HEXAGONAL SCREW M6X25	1	
22	1A007565	TIMING PINION	1	
23	269755	SOCKET HEAD SCREW (M8X12)	1	
24	485703	WASHER	1	
25	847928	CHAIN SUPPORT GASKET	1	
26	B017165	CHAIN TENSIONER DEVICE	1	
27	434541	SCREW	2	
28	58273R	THERMIC SENSOR	1	

14

Print Date: 07-Apr-2022

PLATE-7
CYLINDER HEAD COVER

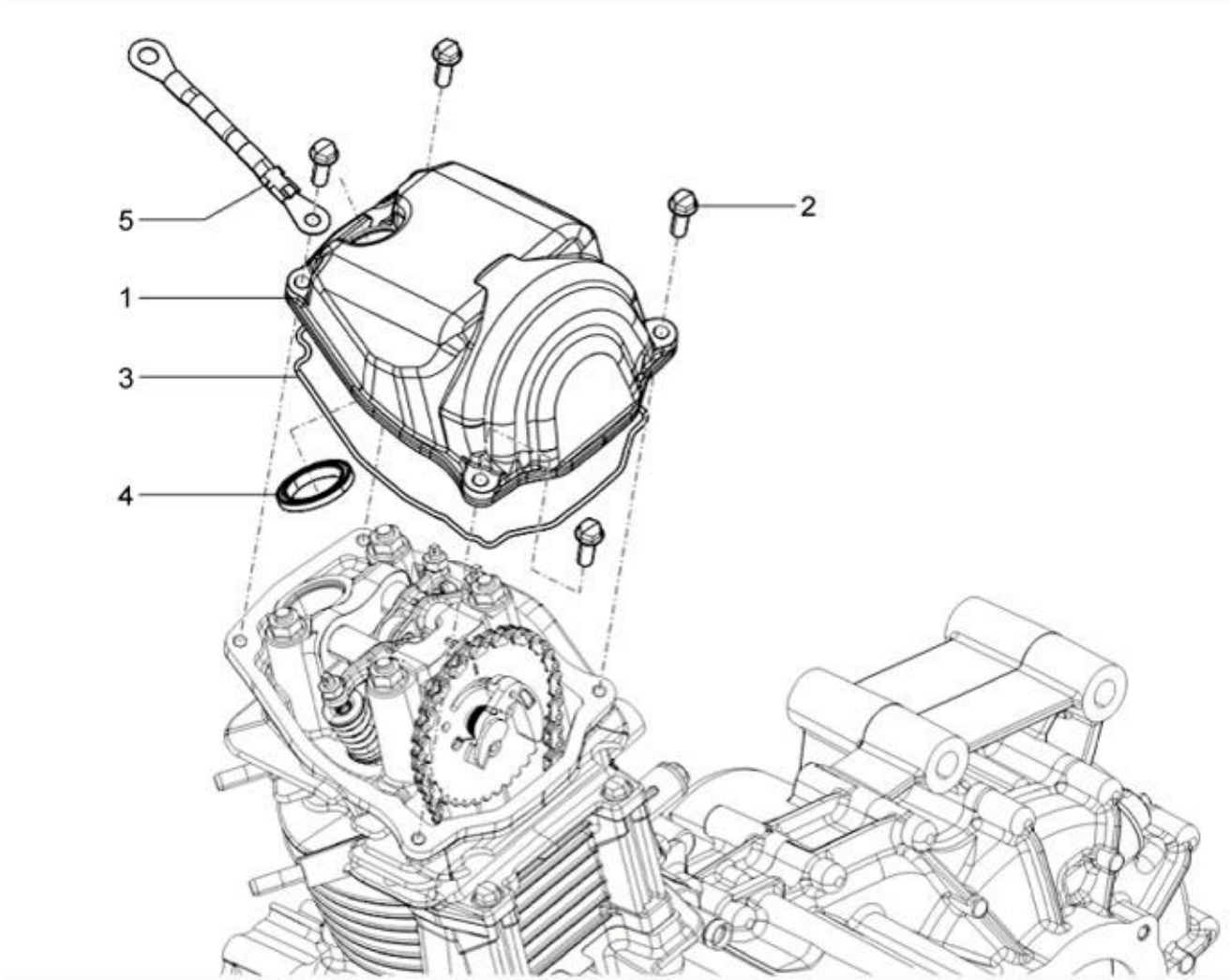
5
1
3
4
2

15

Print Date: 07-Apr-2022

PLATE-7
CYLINDER HEAD COVER

Fig. No.	Part No.	Description	Qty	Remarks
1	1A006545	HEAD COVER	1	
2	018639	SCREW M6X20	4	
3	B018533	CYLINDER HEAD COVER GASKET	1	
4	B014732	SPARK PLUG HOLE GASKET	1	
5	1D001894	GROUND WIRE	1	

16

Print Date: 07-Apr-2022

PLATE-8
OIL PUMP

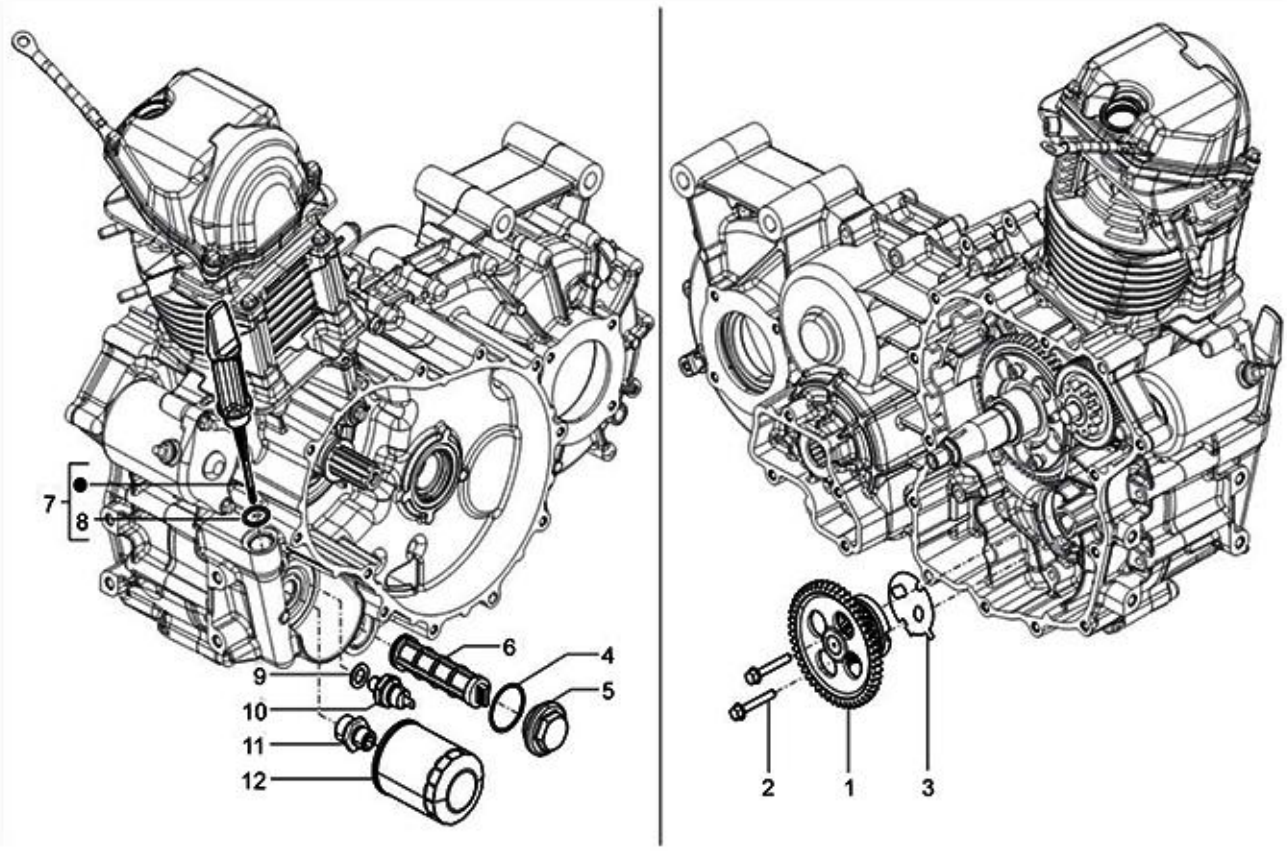
7
8
6
4
5
9
10
11
12
2
1
3

17

Print Date: 07-Apr-2022

PLATE-8
OIL PUMP

Fig. No.	Part No.	Description	Qty	Remarks
1	1A006877	OIL PUMP ASSY	1	
2	1A016737	FLANGED HEXAGONAL HEAD SCREW	2	
3	B015943	CRANKCASE/ OIL PUMP GASKET	1	
4	285536	O-RING GASKET 31.47X1.78	1	
5	B015598	OIL FILTER PLUG	1	
6	1A006812	COMPLETE INTAKE OIL FILTER	1	
7	1A007047	OIL DIPSTICK COMPLETE	1	
8	479986	O-RING GASKET	1	
9	1A011500	WASHER	1	
10	1D001138	MINIMUM PRESSURE OIL SWITCH	1	
11	1A009762	OIL FILTER SCREW	1	
12	82635R	COMPLETE OIL FILTER	1	

18

Print Date: 07-Apr-2022

PLATE-9

STARTER - ELECTRIC STARTER

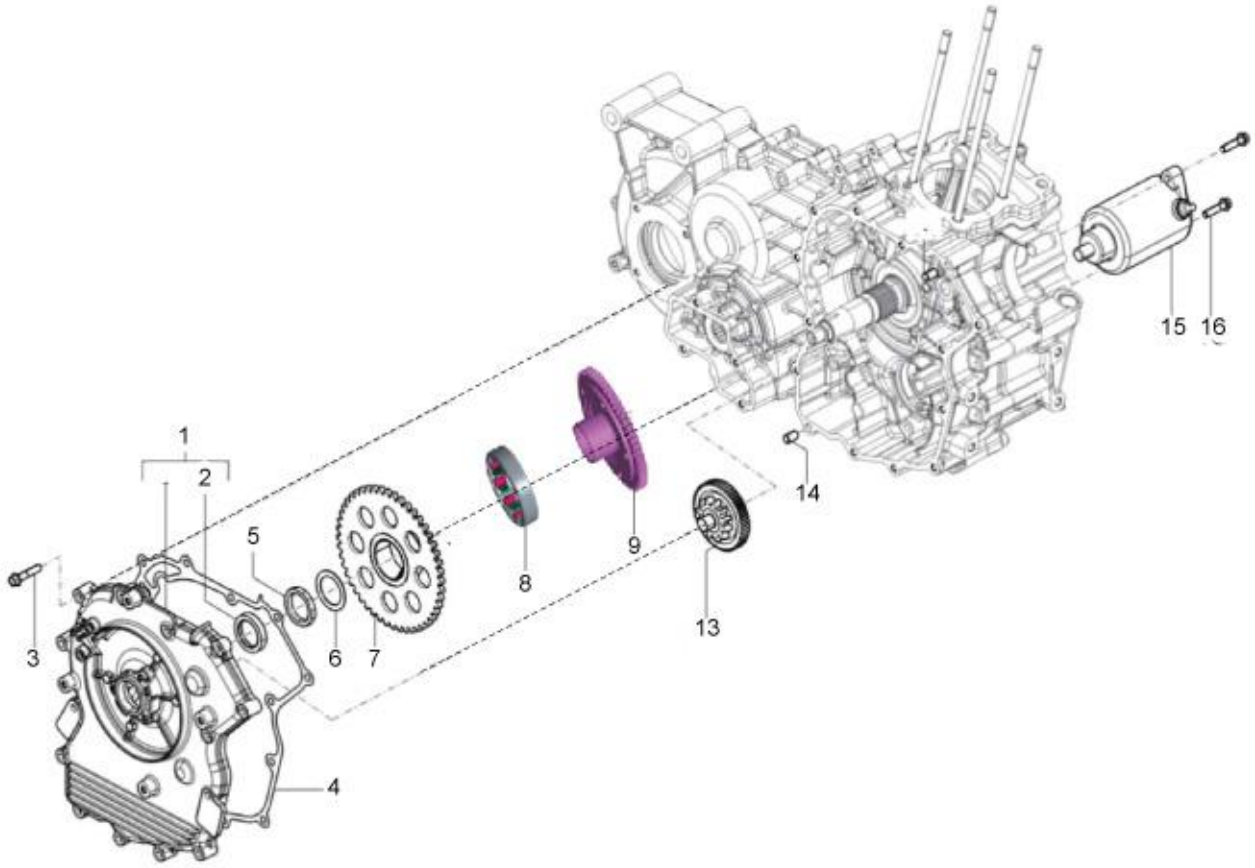
1
2
3
4
5
6
7
8
9
13
14
15
16

19

Print Date: 07-Apr-2022

PLATE-9

STARTER - ELECTRIC STARTER

Fig. No.	Part No.	Description	Qty	Remarks
1	SP1A007045	STARTER COVER WITH I.P.	1	
2	B016120	SEAL RING 25X35X7	1	
3	B018853	FLANGED HEXAGONAL HEAD SCREW M6X30	14	
4	1A006858	STARTER COVER GASKET	1	
5	1A021204	RING NUT	1	
6	B016148	WASHER	1	
7	1A018038	CROWN ELECTRIC STARTER WITH I.P.	1	
8	1A020456	ONE WAY CLUTCH ASSY	1	
9	1A018212	CUM CLUTCH HUB	1	
10	1A009592	O-RING KIT	1	NI
11	1A009593	THRUST WASHER KIT	1	NI
12	SP41A020456	ONE WAY CLUTCH HUB ASSY - 230CC SPD	1	Consists of Part 7 8 and 9
13	B017189	ELECTRIC STARTER INTERMED GEAR WITH P.I.	1	
14	1A000708	DOWEL (Ø7,5, H=12)	2	
15	1A018642R	ELECTRIC STARTER MOTOR	1	
16	B016774	FLANGED HEXAGONAL SCREW M6X25	2	
17	1A009591	HEXAG. HEAD SCREW	1	NI
18	1A009586	REAR BRACKET ASSY	1	NI
19	1A009587	BRUSH ASSLY KIT (+VE & -VE)	1	NI
20	1A009588	ARMATURE ASSLY	1	NI
21	1A009589	YOKE ASSLY	1	NI
22	1A009590	FRONT BRACKET ASSLY	1	NI

20

Print Date: 07-Apr-2022

PLATE-10

FLYWHEEL_A.C GENERATOR ASSY.

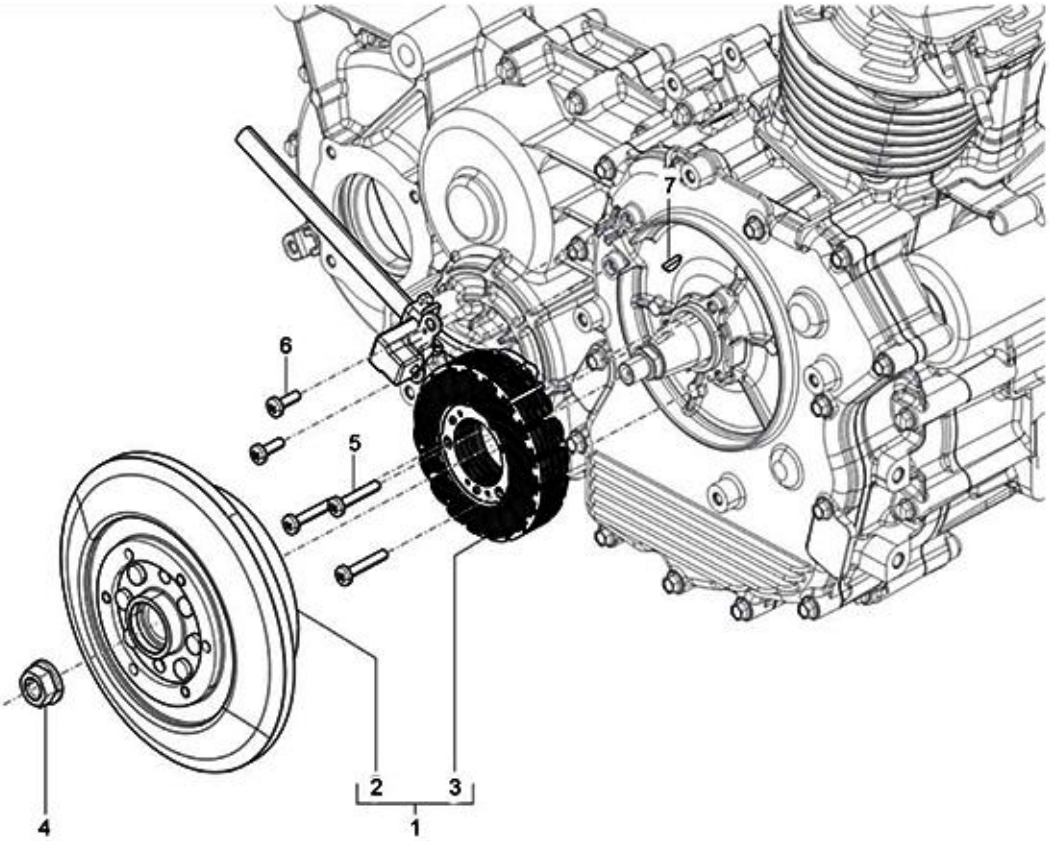
7
6
5
2
3
1
4

21

Print Date: 07-Apr-2022

PLATE-10

FLYWHEEL_A.C GENERATOR ASSY.

Fig. No.	Part No.	Description	Qty	Remarks
1	1D002080	COMPLETE A.C.GENERATOR	1	
2	1A009302	ROTAR ASSY WITH HUB	1	
3	1D001846	COMPLETE STATOR	1	
4	1A006988	NUT WITH SPRING WASHER	1	
5	1A001073	TORX HEAD SCREW M5X16	3	
6	1A013159	TORX HEAD SCREW M5X22	2	
7	000267	WOODRUFF KEY	1	

22

Print Date: 07-Apr-2022

PLATE-11

FAN COVER & SHROUD ASSY.

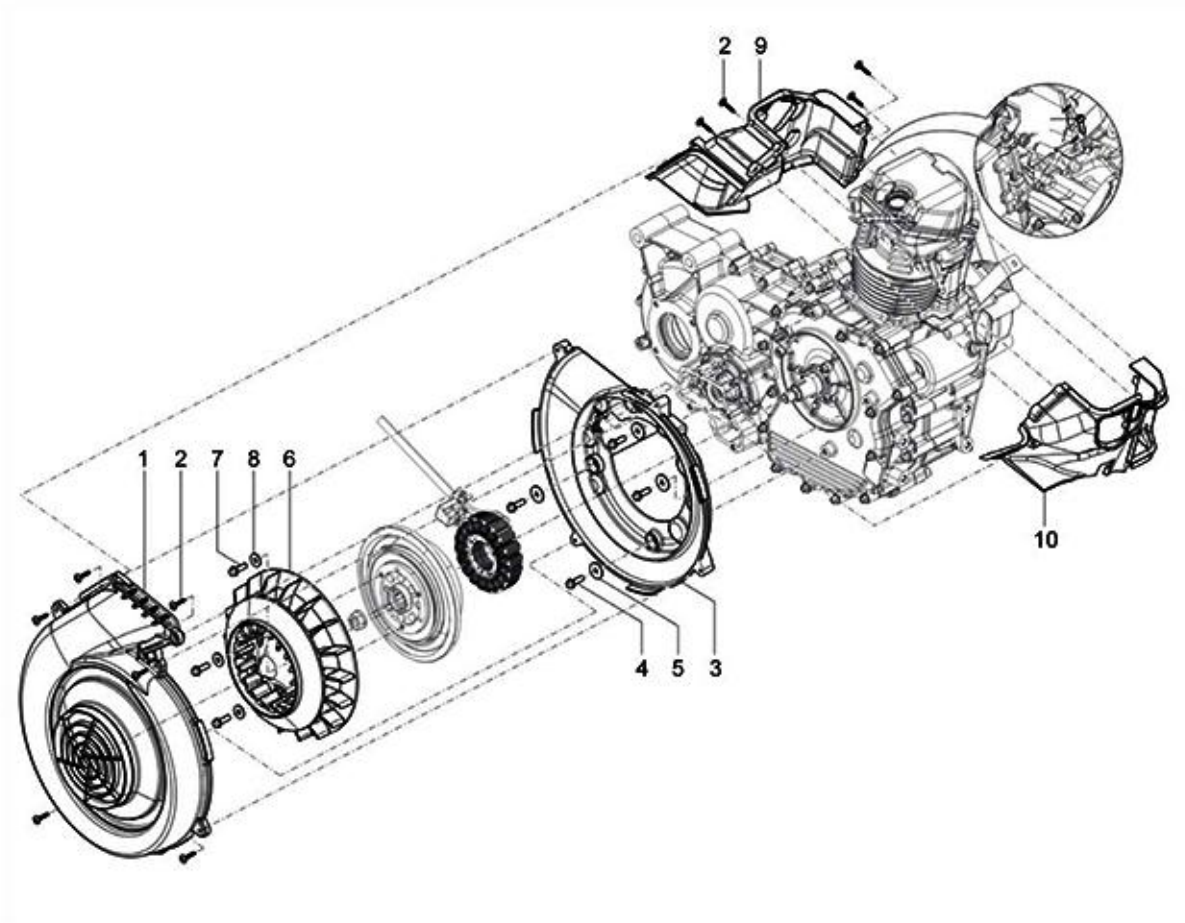
2
9
1
2
7
8
6
10
4
5
3

23

Print Date: 07-Apr-2022

PLATE-11

FAN COVER & SHROUD ASSY.

Fig. No.	Part No.	Description	Qty	Remarks
1	1A010001	FAN COVER	1	
2	1A000024	SELF TAPPING SCREW (3X20)	10	
3	1A006742	FAN COVER SUPPORT	1	
4	018639	SCREW M6X20	4	
5	B016192	WASHER 6.2X20X2	4	
6	1A000831	ASSY FAN	1	
7	1A002691	FLANGED HEX HEAD SCREW M6X20 CL10	3	
8	B019047	WASHER	3	
9	1A009270	COMPLETE SHROUD INTAKE SIDE	1	
10	1A006740	SHROUD EXHAUST SIDE	1	
11	B016620	SCREW WITH CYLINDRICAL HEAD M5X21	1	

24

Print Date: 07-Apr-2022

PLATE-12

GEAR-BOX COMPONENTS & GEAR SHIFTER

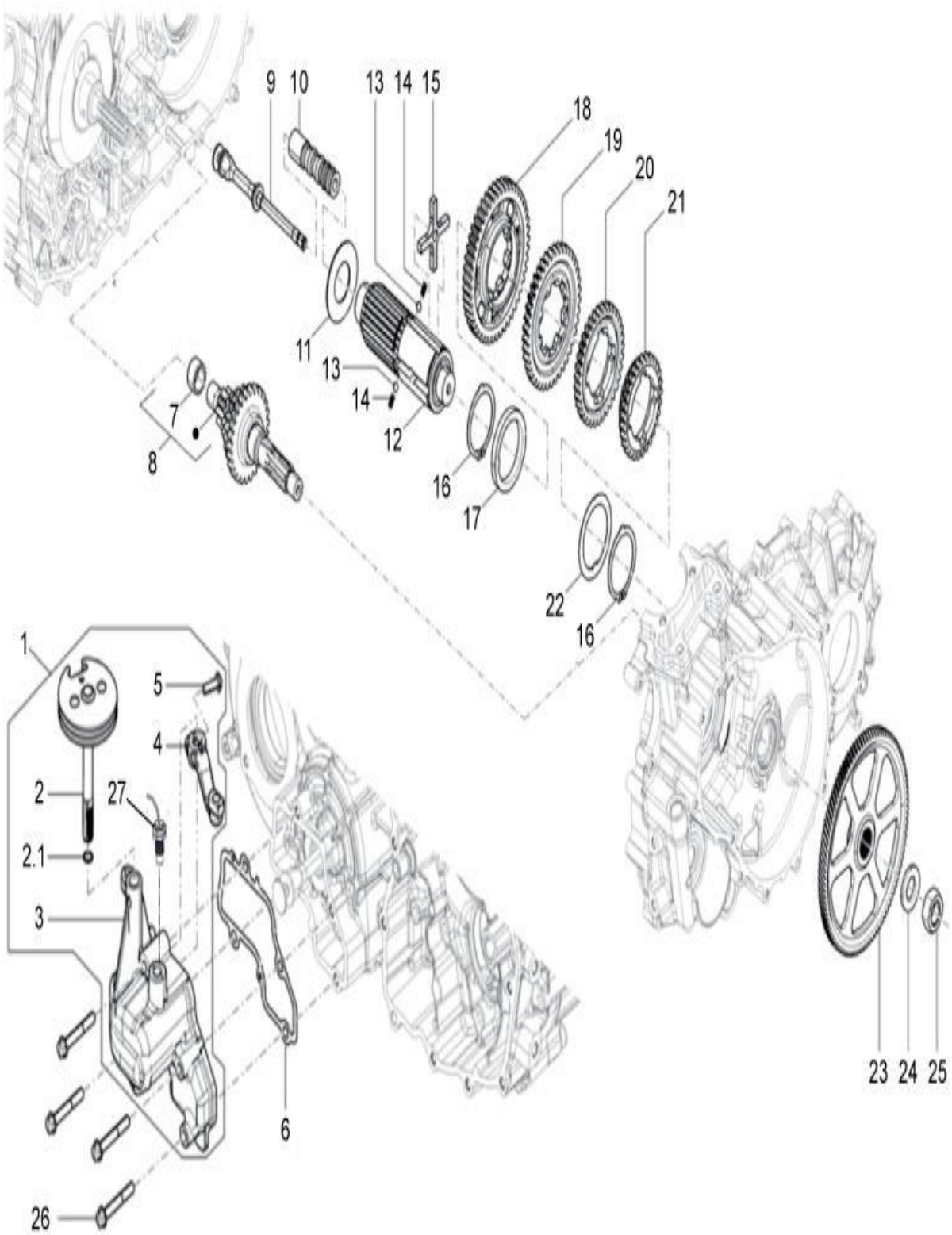
9
10
13
14
15
18
19
20
21
11
13
14
12
7
8
16
17
22
16
1
5
4
2
27
2.1
3
6
26
23
24
25

25

Print Date: 07-Apr-2022

PLATE-12

GEAR-BOX COMPONENTS & GEAR SHIFTER

Fig. No.	Part No.	Description	Qty	Remarks
1	SP1A011650	COMPLETE GEAR SHIFTER ASSY	1	
2	1A010035	COMPLETE SECTOR WITH SHAFT	1	
2.1	1A005178	O- RING	1	
3	1A012182	GEAR SHIFTER HOUSING	1	
4	SP1A007579	COMPL. INVERTER LEVER SECTOR(BSIV)- SPD	1	
5	1A001073	TORX HEAD SCREW M5X16	1	
6	1A012334	GASKET GEAR SHIFTER HOUSING	1	
7	122032014	INNER RING - CLUSTER GEAR	1	
8	1A013046	CLUSTER GEAR	1	
9	1A012181	STEM	1	
10	1A012846	BUSH GEAR SHIFTER	1	
11	1A007029	LOCK WASHER	1	
12	1A017112	SECONDARY GEAR SHAFT	1	
13	002139	BALL	2	
14	1A006970	SPRING	2	
15	1A010166	CROSS	1	
16	009101	SEEGER RING	2	
17	1A006701	LOCK WASHER	1	
18	1A011286	SPEED GEAR 1ST	1	
19	1A011287	SPEED GEAR 2ND	1	
20	1A011288	SPEED GEAR 3RD	1	
21	1A011289	SPEED GEAR 4TH	1	
22	1A006115	LOCK WASHER	1	
23	NS	NOT SERVICEABLE	1	
24	B018464	BELLEVILLE SPRING	1	
25	21118	HEX NUT M18 X 1.5P	1	
26	B016611	FLANGED HEX. HEAD SCREW M6X45 CL10	4	
27	1A010016	NEUTRAL SWITCH	1	

26

Print Date: 07-Apr-2022

PLATE-13

CLUTCH ASSY & CLUTCH COVER

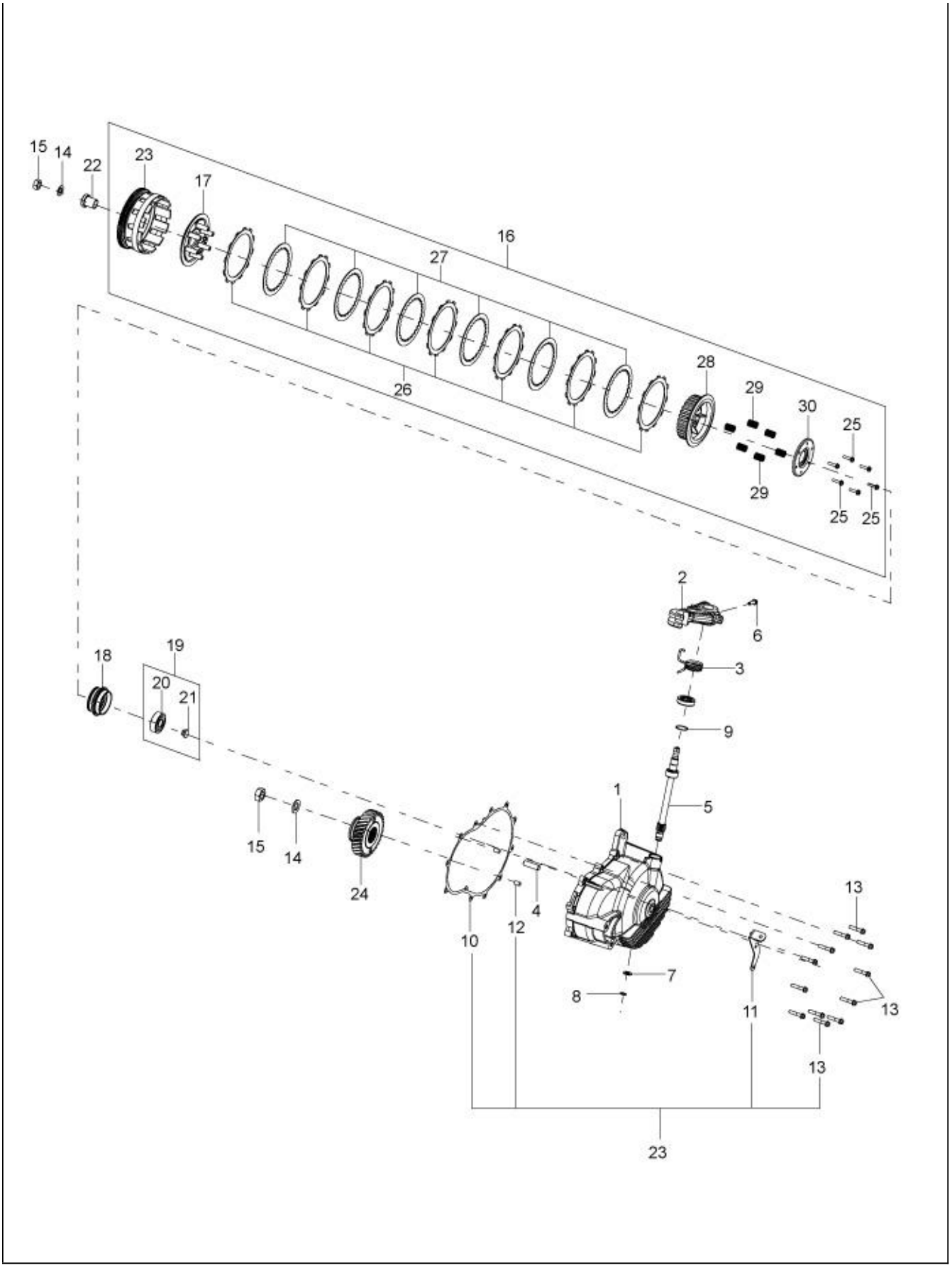
15
14
22
23
17
16
27
26
28
29
30
25
29
25
25
2
6
3
18
19
20
21
9
1
5
15
14
24
10
12
4
13
7
8
11
13
13
23

27

Print Date: 07-Apr-2022

PLATE-13

CLUTCH ASSY & CLUTCH COVER

Fig. No.	Part No.	Description	Qty	Remarks
1	1A013915	CLUTCH COVER	1	
2	1A015505	CLUTCH LEVER	1	
3	1A012374	CLUTCH DRIVE SPRING	1	
4	1A012702	CLUTCH CONTROL SHAFT	1	
5	1A012376	CLUTCH DRIVE SHAFT	1	
6	018639	SCREW M6X20	1	
7	1A007501	PLANE WASHER	1	
8	006410	CIRCLIP	1	
9	1A012373	SEAL RING 12X22X6	1	
10	1A011940	CLUTCH COVER GASKET	1	
11	1A011461	SUPPORT BRACKET STARTER MOTOR CABLE	1	
12	1A000708	DOWEL (Ø7,5, H=12)	2	
13	B018853	FLANGED HEXAGONAL HEAD SCREW M6X30	12	
14	B018464	BELLEVILLE SPRING	2	
15	1A012845	HEX. NUT M16X1.25	1	
16	1A013629	CLUTCH ASSY	1	
17	1A019391	WHEEL CLUTCH	1	
18	1A010540	CLUTCH PRESSURE PLATE	1	
19	SP1A010560	CLUTCH PRESSURE BUSH WITH I.P.	1	
20	478261	PULLEY SHAFT BEARING	1	
21	1A010561	CLUTCH PRESSURE BUSH	1	
22	1A010461	SPACER	1	
23	1A019375	HOUSING CLUTCH ASSLY	1	
24	1A010208	ENGINE GEAR	1	
25	1A019394	HEX BOLT	6	
26	1A019389	REG. FRICTION PLATE	7	
27	1A019390	PLATE CLUTCH	6	
28	1A019388	HUB CLUTCH WITH INSERT	1	
29	1A019392	SPRING CLUTCH	6	
30	1A019393	HOLDER (THIK 3MM)	1	

28

Print Date: 07-Apr-2022

PLATE-14
DIFFERENTIAL

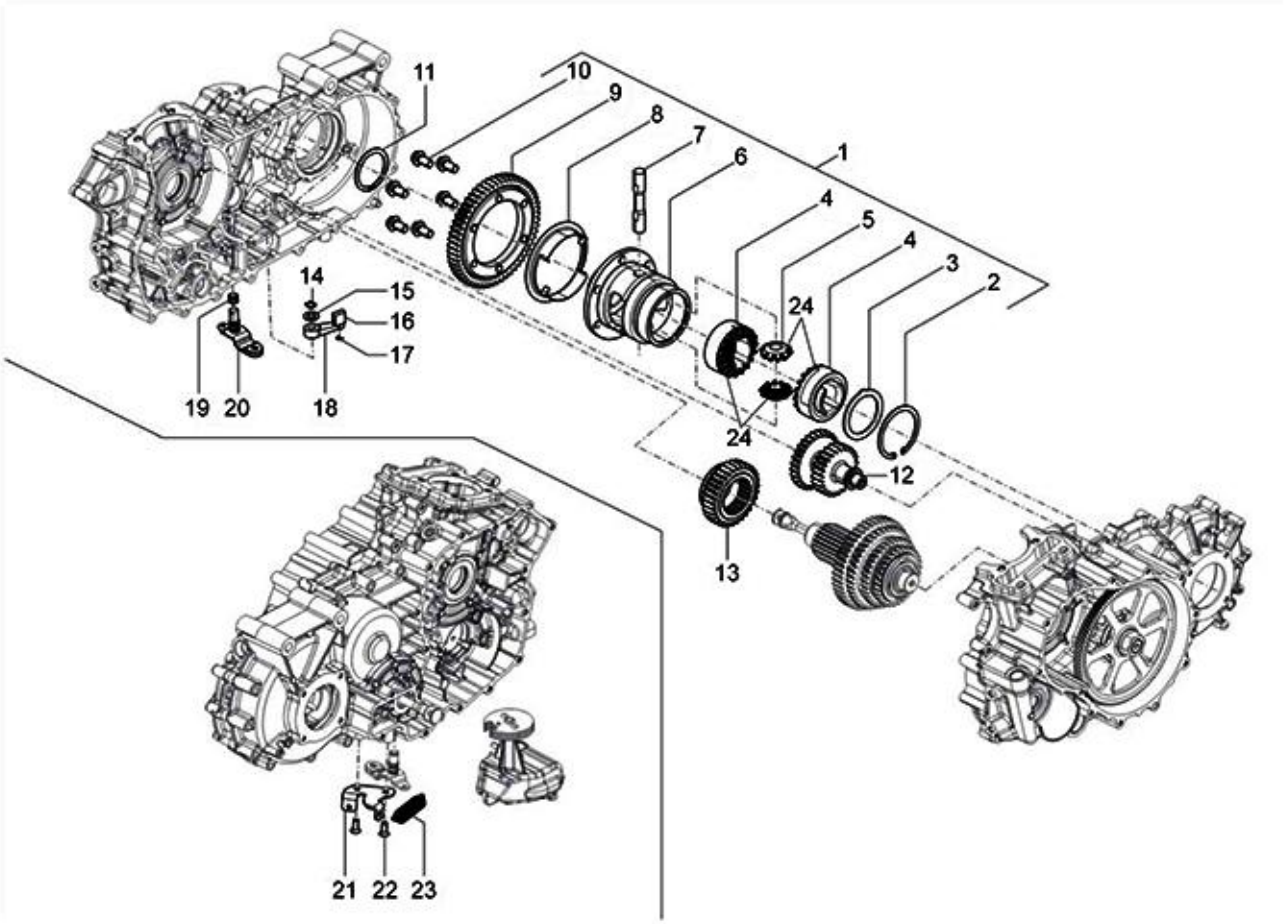
11
10
9
8
7
6
1
4
5
4
3
2
14
15
16
17
24
19
20
18
24
12
13
21
22
23

29

Print Date: 07-Apr-2022

PLATE-14
DIFFERENTIAL

Fig. No.	Part No.	Description	Qty	Remarks
1	SPCM308402	COMPLETE DIFFERENTIAL GEAR	1	LPG
1	CM308403	COMPLETE DIFFERENTIAL GEAR	1	CNG
2	132134	CIRCLIP	1	
3	220575	WASHER 65X3	1	
4	940028	GEAR SUN AND DIFFERENTIAL GEAR	2	SERVICE IN SET (940028)
5	165155R	DIFFERENTIAL GEAR	2	SERVICE INSET (940028)
6	288730	DIFFERENTIAL CAGE	1	
7	132129	PIN	1	
8	1A011778	SATELLITE PIN RETAINER	1	
8A	1A000612	RETAINER SCREW - PRE COATED	2	
9	CM308302	DIFFERENTIAL CROWN	1	LPG
9	CM308303	DIFFERENTIAL CROWN	1	CNG
10	1A004807	SCREW	6	
11	006450	EXT CIRCLIP DIA 48	1	
12	1A008547	REVERSE GEAR- CNG	1	LPG
12	1A011337	REVERSE GEAR	1	CNG
13	1A010632	SLIDING GEAR	1	LPG
13	1A011338	SLIDING GEAR	1	CNG
14	006410	CIRCLIP	1	
15	1A007501	PLANE WASHER	1	
16	1A007051	SLIDER	1	LPG
16	1A011345	SLIDER	1	CNG
17	843000500	CIRCLIP DIA.5 (EXT) TYPE C	1	
18	1A007605	GEAR SHIFTER LEVER	1	
19	1A005176	O- RING	2	
20	1A009093	INVERTER LEVER SECTOR WITH P.I.	1	
21	1A008804	REVERSE CABLE REACTION BRACKET	1	
22	1A016964	CSK PHILIPS HEAD SCREW	2	
23	127111011	REVERSE GEAR SPRING	1	
24	940028	GEAR SUN AND DIFFERENTIAL GEAR	1	

30

Print Date: 07-Apr-2022

PLATE-15
AIR FILTER ASSEMBLY

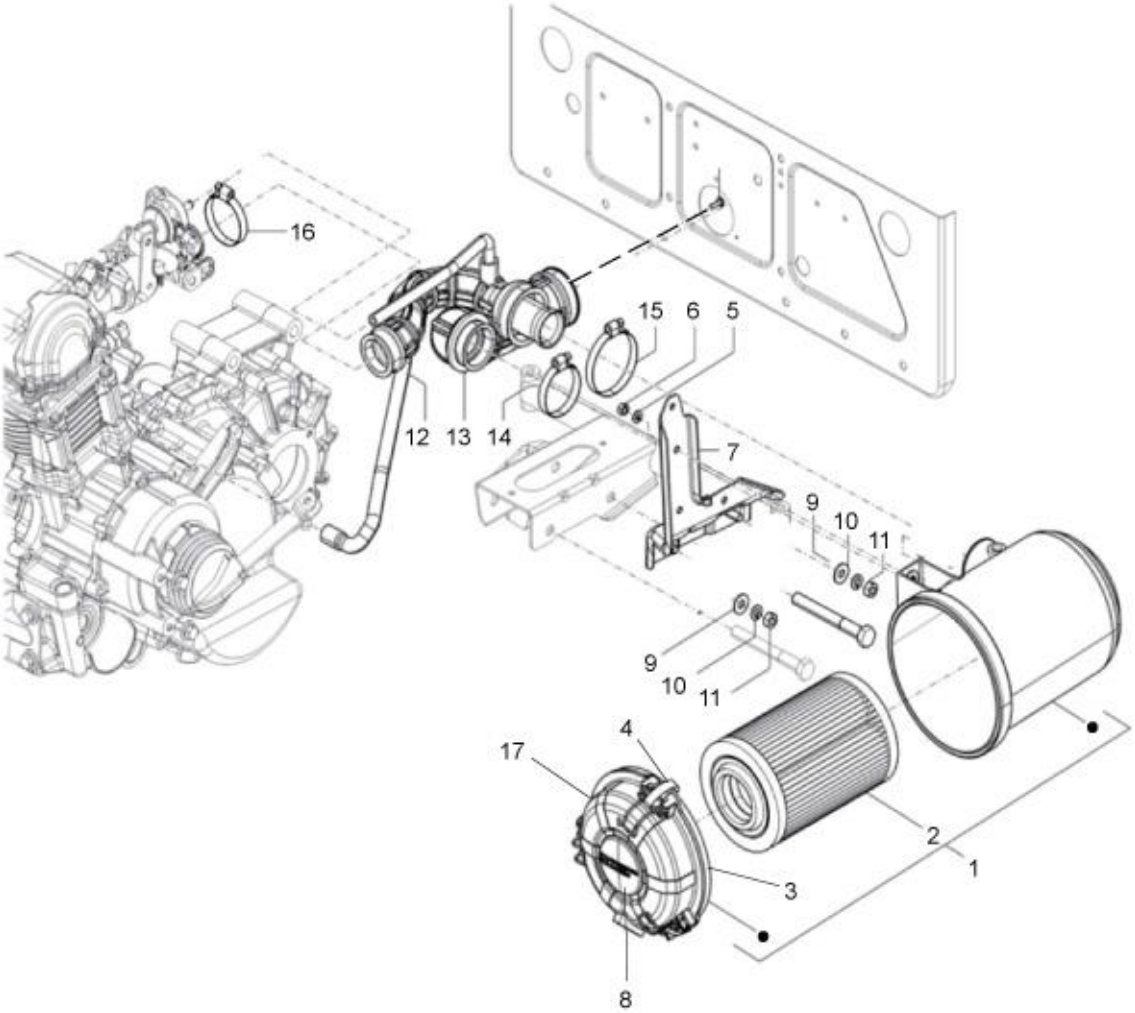
16
15
6
5
12
13
14
7
9
10
11
9
10
11
4
17
2
1
3
8

31

Print Date: 07-Apr-2022

PLATE-15

AIR FILTER ASSEMBLY

Fig. No.	Part No.	Description	Qty	Remarks
1	B073441	AIR FILTER ASSLY.W/O BKT	1	
2	B076112	AIR FILTER ELEMENT	1	
3	940072	AIR FILTER COVER GASKET	1	
4	920088	CLAMP	3	
5	016406	SPRING WASHER	1	
6	20106	HEX NUT M6	1	
7	6A001205	BRACKET AIR FILTER SUPPORT COMPLETE	1	Under Development
8	940071	DUST VALVE	1	
9	2383	PLAIN WASHER M20X8.5X2	2	
10	016408	SPRING WASHER	2	
11	20108	HEX NUT M8	2	
12	1A017576	THROTTLE BODY / AIR BOX COUPLING	1	
13	1A017578	SNORKEL AIRBOX	1	
14	604756	HOSE CLIP	1	
15	604553	WORM CLIP	1	
16	604756	HOSE CLIP	1	
17	940069	AIR FILTER COVER-(UG)	1	

32

Print Date: 07-Apr-2022

PLATE-16

FUEL INJECTION SYSTEM - CARBURETOR - GAS

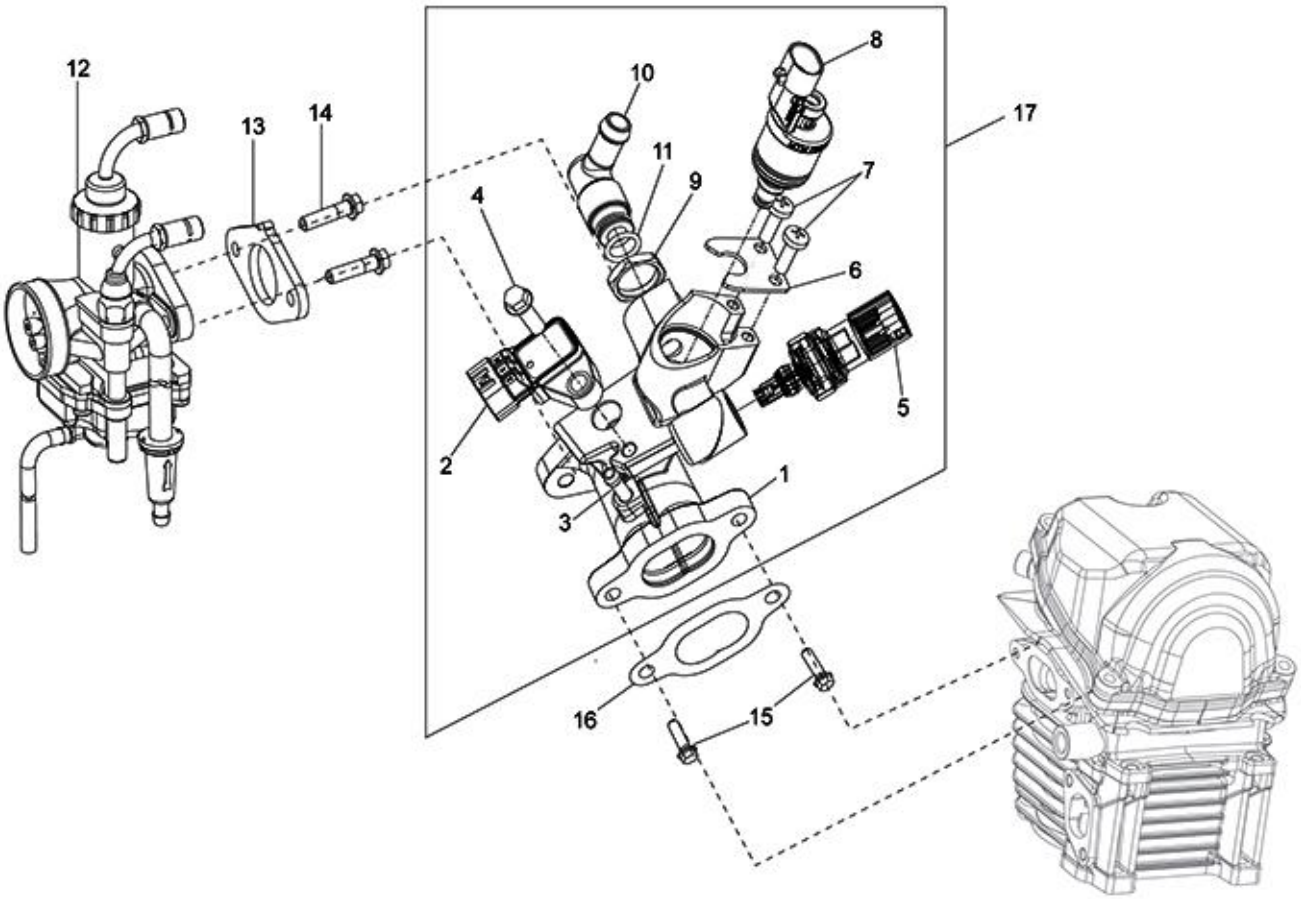
12
13
14
10
8
17
11
9
7
4
6
5
2
1
3
16
15

33

Print Date: 07-Apr-2022

PLATE-16

FUEL INJECTION SYSTEM - CARBURETOR - GAS

Fig. No.	Part No.	Description	Qty	Remarks
1	1A010172	INTAKE FITTING WITH I.P.	1	
2	642786	AIR PRESSURE SENSOR	1	
3	1A011524	PIPE FITTING	1	Not Serviceable
4	434541	SCREW	1	
5	1A011438	SENSOR	1	
6	1A009606	INIECTOR RETAINING PLATE	1	
7	1A015812	FLANGED HEXAGONAL HEAD SCREW	2	
8	1A009527	INJECTOR	1	
9	1A010185	SMALL NUT	1	
10	1A010109	PIPE FITTING	1	
11	1A009702	O-RING 11X2	1	
12	CM166109	CARBURATOR (LPG / CNG)	1	
13	B016016	INTAKE FITTING GASKET WITH O-RING	1	
14	B016774	FLANGED HEXAGONAL SCREW M6X25	2	
15	018639	SCREW M6X20	2	
16	B018442	INTAKE FITTING GASKET	1	
17	SP1A015853	COMPLETE INTAKE FITTING_SPD	1	

34

Print Date: 07-Apr-2022

PLATE-17
CARBURETOR CHILD PARTS

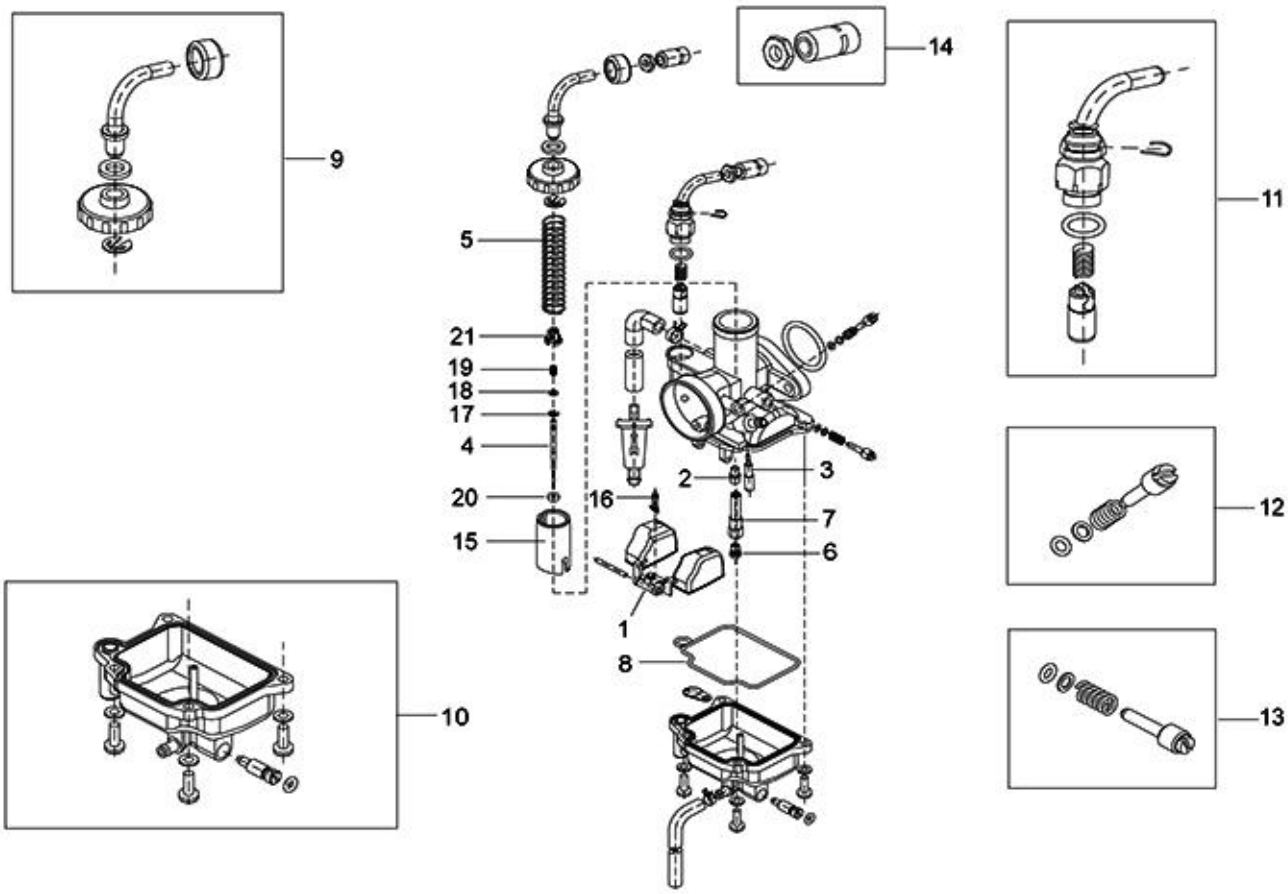
9
14
11
5
21
19
18
17
4
20
15
16
2
3
7
6
1
8
12
13
10

35

Print Date: 07-Apr-2022

PLATE-17

CARBURETOR CHILD PARTS

Fig. No.	Part No.	Description	Qty	Remarks
1	B016823	FLOAT	1	
2	CM263504	NEEDLE JET	1	Under Development
3	CM167801	PILOT JET	1	
4	CM263603	CONIC NEEDLE	1	Under Development
5	B016829	SPRING (PV)	1	
6	CM167701	MAXIMUM JET	1	
7	CM167903	DIFFUSER	1	
8	B016834	FLOAT CHAMBER GASKET	1	
9	B016825	GAS VALVE COVER KIT	1	UCAL Make carburetor
10	B016822	FLOAT CHAMBER BODY ASSY KIT	1	UCAL Make carburetor
11	1A000542	STARTER KIT	1	UCAL Make carburetor
12	CM264703	KIT AIR SCREW	1	
13	B016828	IDLE ADJUSTER KIT	1	UCAL Make carburetor
14	B016869	CABLE ADJUSTER KIT	1	UCAL Make carburetor
15	1A014508	PISTON VALVE	1	Under Development
16	1A015321	VALVE SEAT	1	
17	1A004221	E-RING	1	
18	1A004222	PACKGING	1	
19	1A004223	SPRING	1	
20	1A004224	RING	1	
21	1A004225	HOLDER	1	

36

Print Date: 07-Apr-2022

PLATE-18
SILENCER

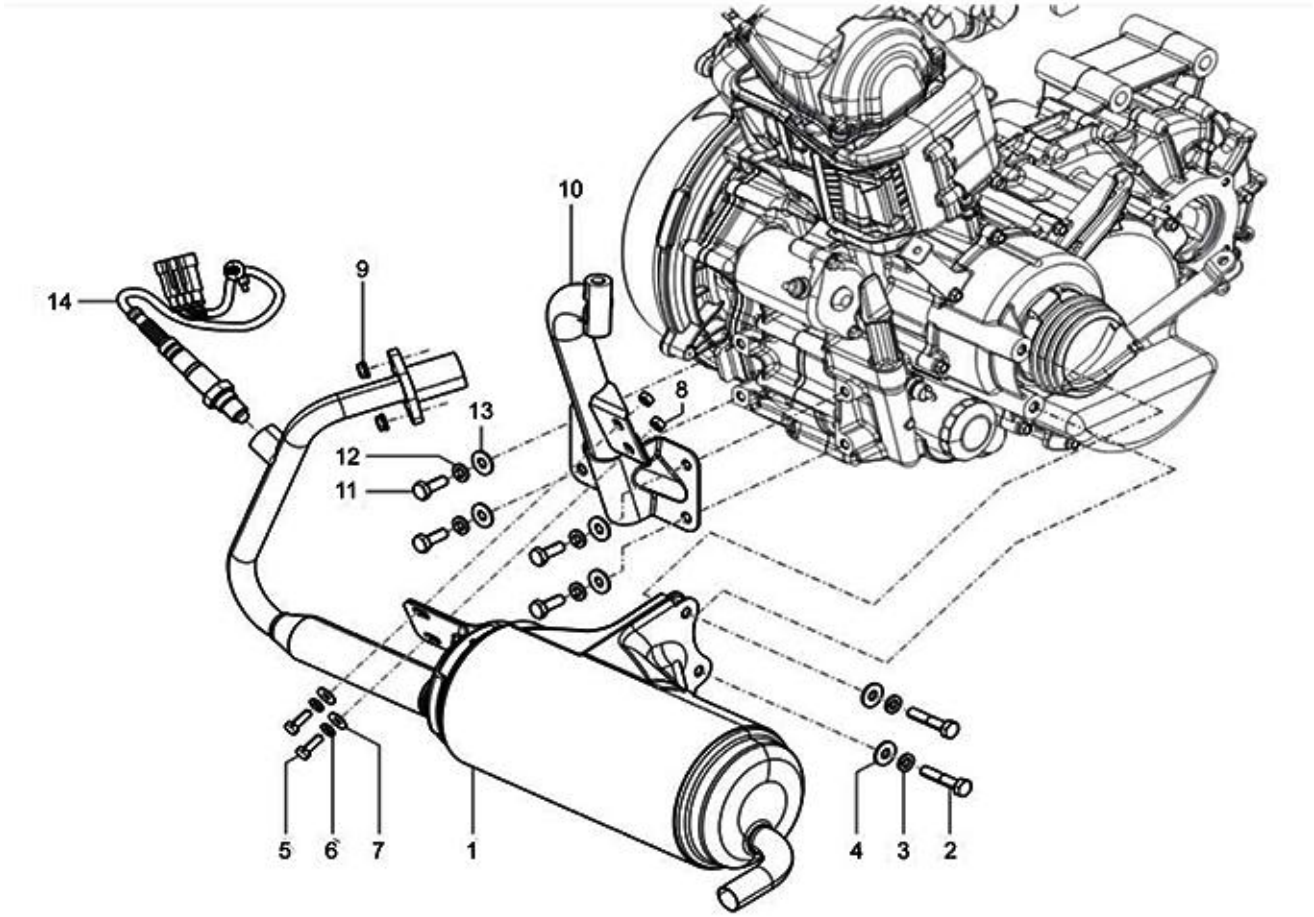
14
9
10
13
12
11
8
5
6
7
1
4
3
2

37

Print Date: 07-Apr-2022

PLATE-18
SILENCER

Fig. No.	Part No.	Description	Qty	Remarks
1	1A017410	COMPLETE MUFFLER	1	CNG/LPG
2	30074	HEX HEAD BOLT M8 X 40 CL 8.8	2	
3	016408	SPRING WASHER	2	
4	2383	PLAIN WASHER M20X8.5X2	2	
5	31089	HEX HEAD SCREW M6X18 CL 8.8	2	
6	016406	SPRING WASHER	2	
7	013880	PLAIN WASHER	2	
8	20106	HEX NUT M6	2	
9	436947	FLANGED NUT M7X1 H=8	2	
10	6A001199	BKT. SUB ASSLY. ENGINE SUPPORT REAR	1	
11	B076143	HEX HEAD BOLT M8 X 25	4	
12	016408	SPRING WASHER	4	
13	2383	PLAIN WASHER M20X8.5X2	4	
14	1A014335	LAMBDA SENSOR	1	

38

Print Date: 07-Apr-2022

PLATE-19
COMPLETE H.T. COIL

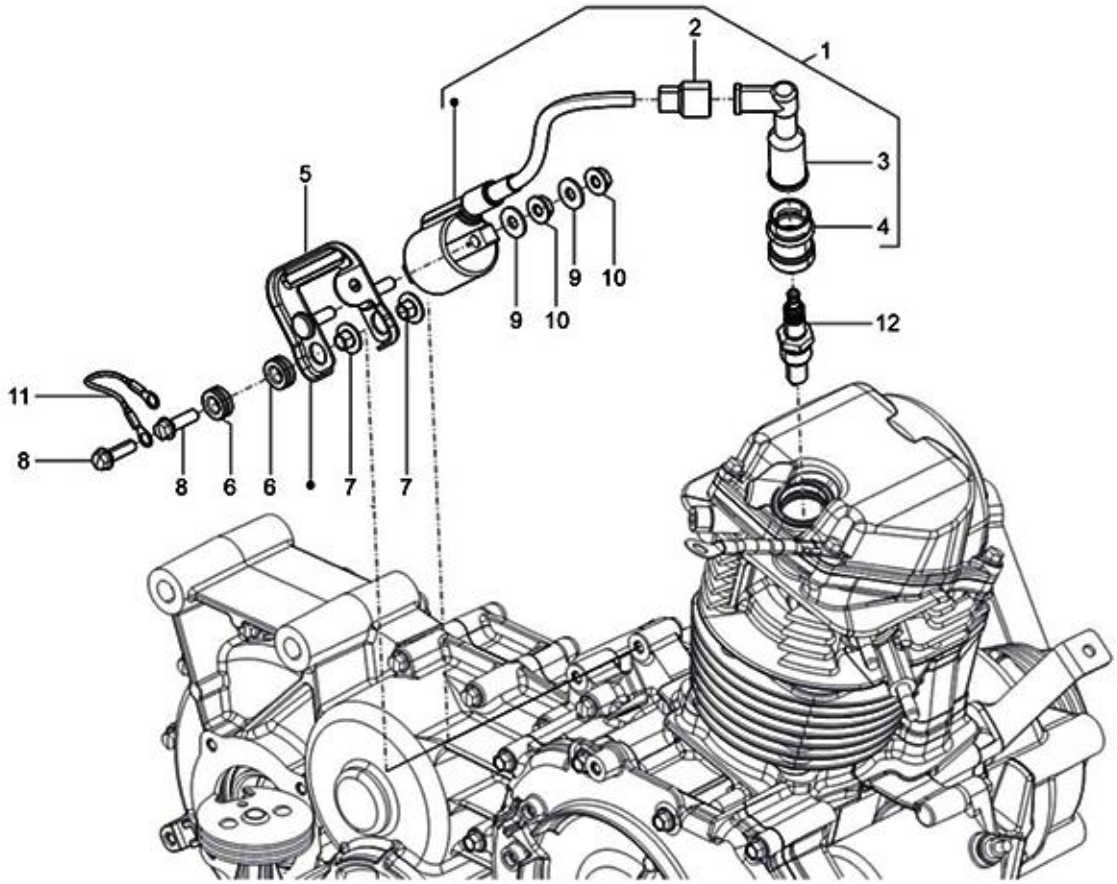
1
2
3
4
5
6
6
7
7
8
8
9
9
10
10
11
12

39

Print Date: 07-Apr-2022

PLATE-19
COMPLETE H.T. COIL

Fig. No.	Part No.	Description	Qty	Remarks
1	1A015287	HT COIL COMPLETE WITH CUP	1	CNG/LPG
2	1A017558	PROTECTION CAP	1	CNG/LPG
3	1A017559	SPARK PLUG CAP	1	CNG/LPG
4	1A017560	SPARK PLUG PROTECTION COLLAR	1	CNG/LPG
5	1A011407	COMPLETE COIL SUPPORT BRACKET	1	CNG/LPG
6	B014063	BUFFER DAMPER	2	
7	B014066	SPACER	2	
8	018639	SCREW M6X20	2	
9	013880	PLAIN WASHER	2	
10	872816	FLANGED NUT	2	
11	1D001894	GROUND WIRE	1	
12	643367	SPARK PLUG	1	

40

Print Date: 07-Apr-2022

PLATE-20

Main frame Assly & Passanger Body & Doors Ape Auto Dx (D+3)

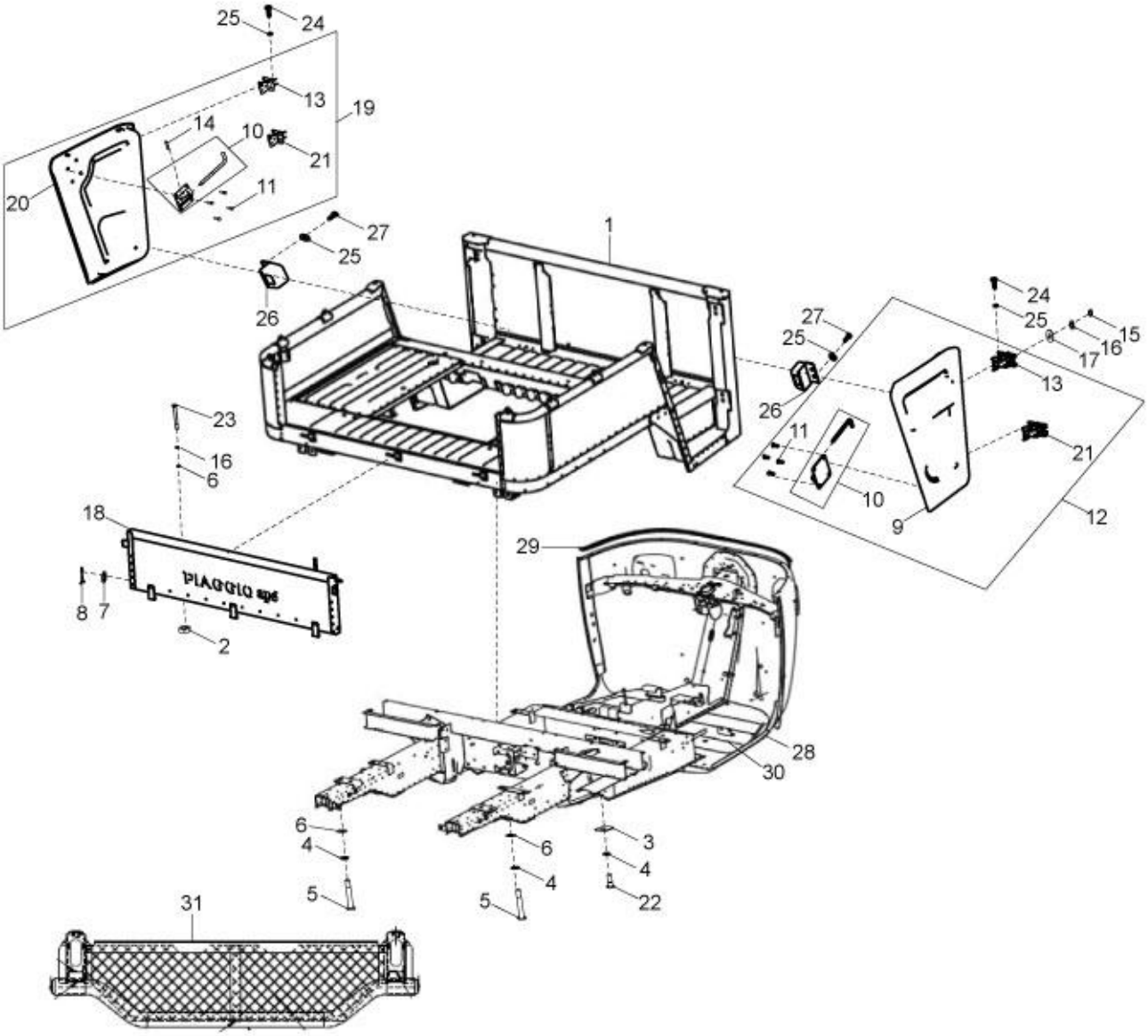
25
24
13
19
14
10
21
20
11
27
25
1
26
24
27
25
15
16
17
25
13
26
23
11
16
6
21
10
9
12
18
29
PIAGGIO
8
7
2
28
30
6
4
6
3
4
4
5
5
22
31

41

Print Date: 07-Apr-2022

PLATE-20

Main frame Assly & Passanger Body & Doors Ape Auto Dx (D+3)

Fig. No.	Part No.	Description	Qty	Remarks
1	6B001109CB	ASSY PASS BODY APE AUTO DX 230CC BS6-CB	1	CNG/LPG
1	6B001109BL	ASSY PASS BODY APE AUTO DX 230CC BS6-BL	1	
1	6B001109BY	ASSY PASS BODY APE AUTO DX 230CC BS6-BY	1	
1	6B001109EG	ASSY PASS BODY APE AUTO DX 230CC BS6-EG	1	
1	6B001109BW	ASSY PASS BODY APE AUTO DX 230CC BS6-BW	1	
1	6B001109NB	ASSY PASS BODY APE AUTO DX 230CC BS6-NB	1	
1	6B001109WR	ASSY PASS BODY APE AUTO DX 230CC BS6-WR	1	
2	20108	HEX NUT M8	1	
3	604785	SUPPORT PLATE	4	
4	3056	PLAIN WASHER M6 OD12	12	
5	30072	HEX HEAD BOLT M8 X 35	2	
6	808000826	PLAIN WASHER M8	2	
7	3057	PL. WASHER 13 X 7 X 1	1	
8	12778	SPLIT PIN 3 X 20	1	
9	6B0015974ED	PASSENGER DOOR COMPLETE ASSLY RH	1	Not Serviceable
10	6B001599	TOWER BOLT ASSLY	1	
11	31088	HEX HD SCREW M6 X 16 CL 8.8 (811061623)	4	
12	6B0015974ED	PASSENGER DOOR COMPLETE ASSLY RH	1	
13	6B001520	DOOR HINGE ASSLY UPPER	1	
14	17702	SPRING PIN	1	
15	20106	HEX NUT M6	8	
16	016408	SPRING WASHER	2	
17	2383	PLAIN WASHER M20X8.5X2	4	
18	B042726ED	REAR HATCH WITH LATCH BOLT PASS DTL-CED	1	
19	6B0015964ED	PASSENGER DOOR COMPLETE ASSLY LH	1	
20	6B0015964ED	PASSENGER DOOR COMPLETE ASSLY LH	1	Not Serviceable
21	6B001455	HINGE ASSLY-PASS DOOR LOWER	1	
22	B008478	HEX HEAD SCREW M8X55 BLACK PASS.	2	
23	6B002075	HEX HEAD BOLT (M8 X 85)	4	
24	31089	HEX HEAD SCREW M6X18 CL 8.8	4	
25	16603	PLAIN WASHER (METALLIC)	8	
26	6B001627	DOOR TRIMS & FITTMENTS (501)	2	
27	B041668	SELF-TAPPING SCREW AB 4.8 X 19	6	
28	6B002432CB	MAIN FRAME WITH HSRP D3S 230CC BS6-CB	1	
28	6B002432BL	MAIN FRAME WITH HSRP D3S 230CC BS6-BL	1	

42

Print Date: 07-Apr-2022

PLATE-20

Main frame Assly & Passanger Body & Doors Ape Auto Dx (D+3)

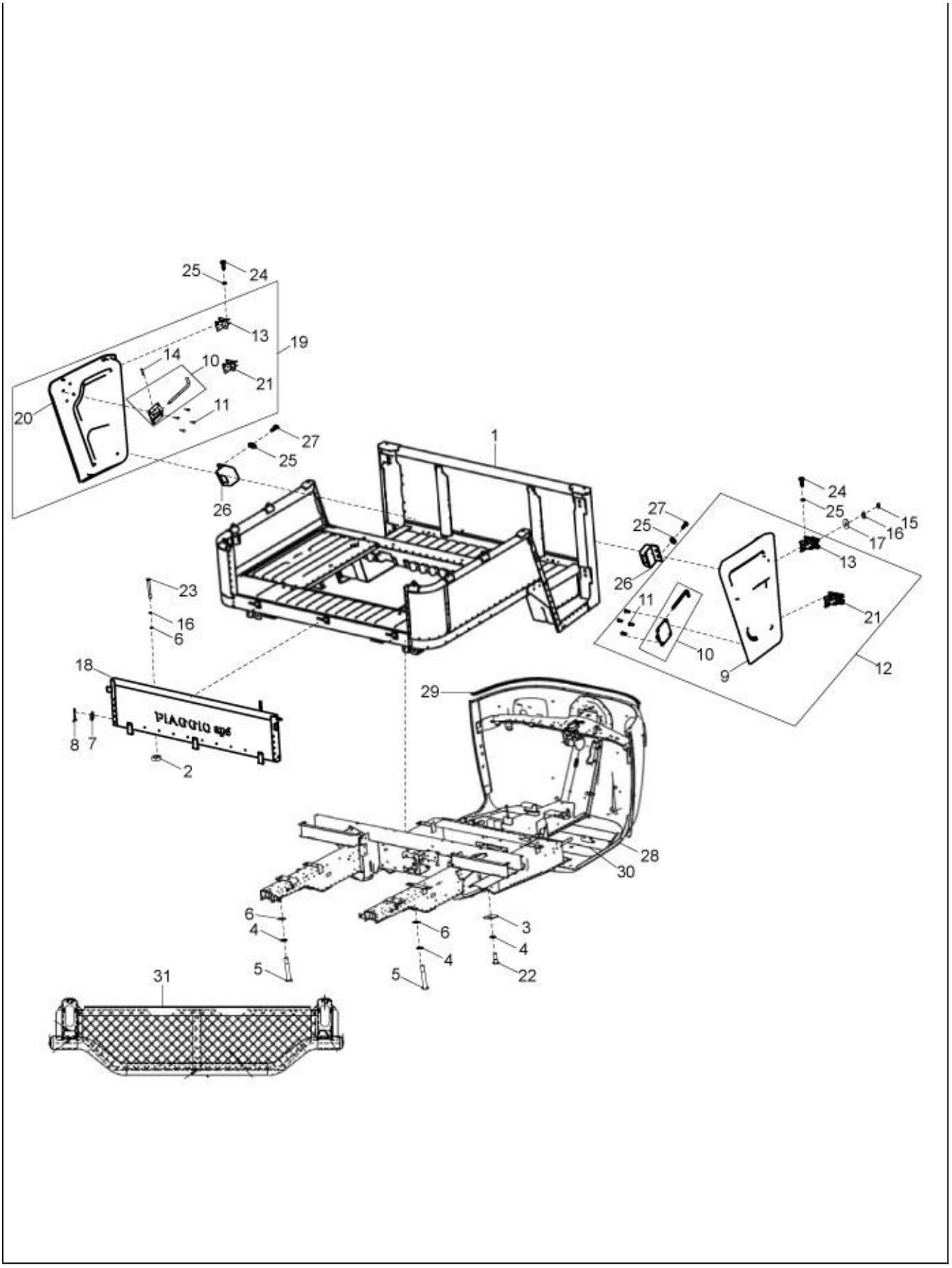
25
24
13
19
14
10
21
20
11
27
25
1
26
24
27
25
15
16
17
25
13
26
23
11
16
6
21
10
9
12
18
29
PIAGGIO
8
7
2
28
30
6
4
6
3
4
4
5
5
22
31

43

Print Date: 07-Apr-2022

PLATE-20

Main frame Assly & Passanger Body & Doors Ape Auto Dx (D+3)

Fig. No.	Part No.	Description	Qty	Remarks
28	6B002432BY	MAIN FRAME WITH HSRP D3S 230CC BS6-BY	1	
28	6B002432EG	MAIN FRAME WITH HSRP D3S 230CC BS6-EG	1	
28	6B002432BW	MAIN FRAME WITH HSRP D3S 230CC BS6-BW	1	
28	6B002432NB	MAIN FRAME WITH HSRP D3S 230CC BS6-NB	1	
28	6B002432WR	MAIN FRAME WITH HSRP D3S 230CC BS6-WR	1	
29	B024474	BEADDING LINING	1	
30	604868PC	CABIN FLOOR 501 CNG/LPG	1	
31	6B001132	REAR VISUAL BARRIER ASSLY	1	

44

Print Date: 07-Apr-2022

PLATE-21
TOOLS AND WHEELS

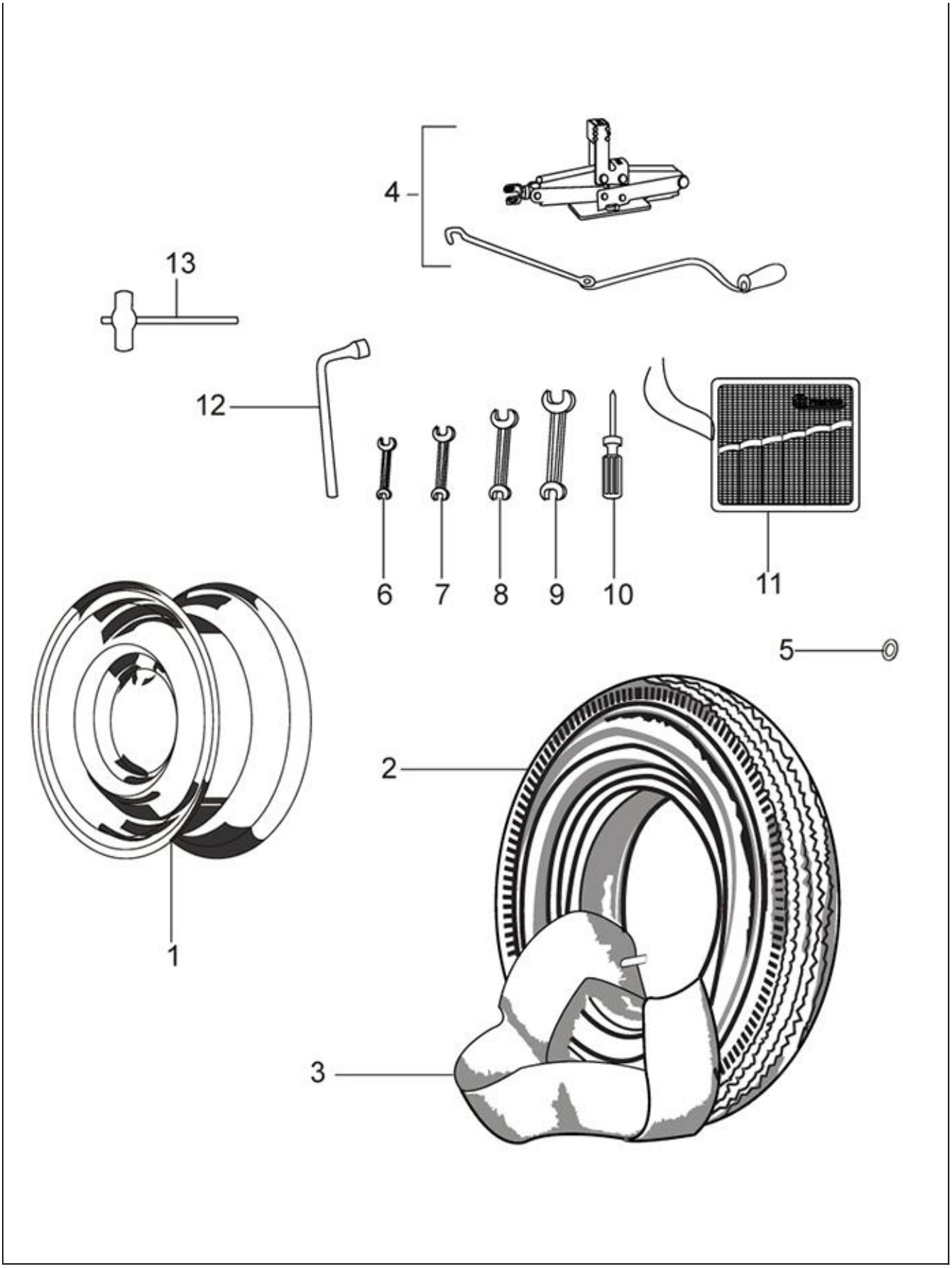
4
13
12
6
7
8
9
10
11
5
2
1
3

45

Print Date: 07-Apr-2022

PLATE-21
TOOLS AND WHEELS

Fig. No.	Part No.	Description	Qty	Remarks
1	644973R	WHEEL RIM ASSY.	1	
2	587971	TYRE 4.50 X 10 8 PR	1	
3	151924	INNER TUBE TYRE 4.5 X 10 INCH	4	
4	B001954R	JACK ASSEMBLY COMPONENT	1	
5	6018	PL. WASHER	2	
6	567454	DOUBLE END SPANNER7/8	1	
7	567455	DE SPANNER 10X13 IS:2018(ZN PLATING)	1	
8	567456	DOUBLE END SPANNER 12/14	1	
9	567457	DE SPANNER 17/19	1	
10	567458	SCREW DRIVER (-)&(+) 80	1	
11	604707	TOOL BAG	1	
12	567459	L TYPE WHEEL SPANNER (A/F19)	1	

46

Print Date: 07-Apr-2022

PLATE-22
ENGINE MOUNTING

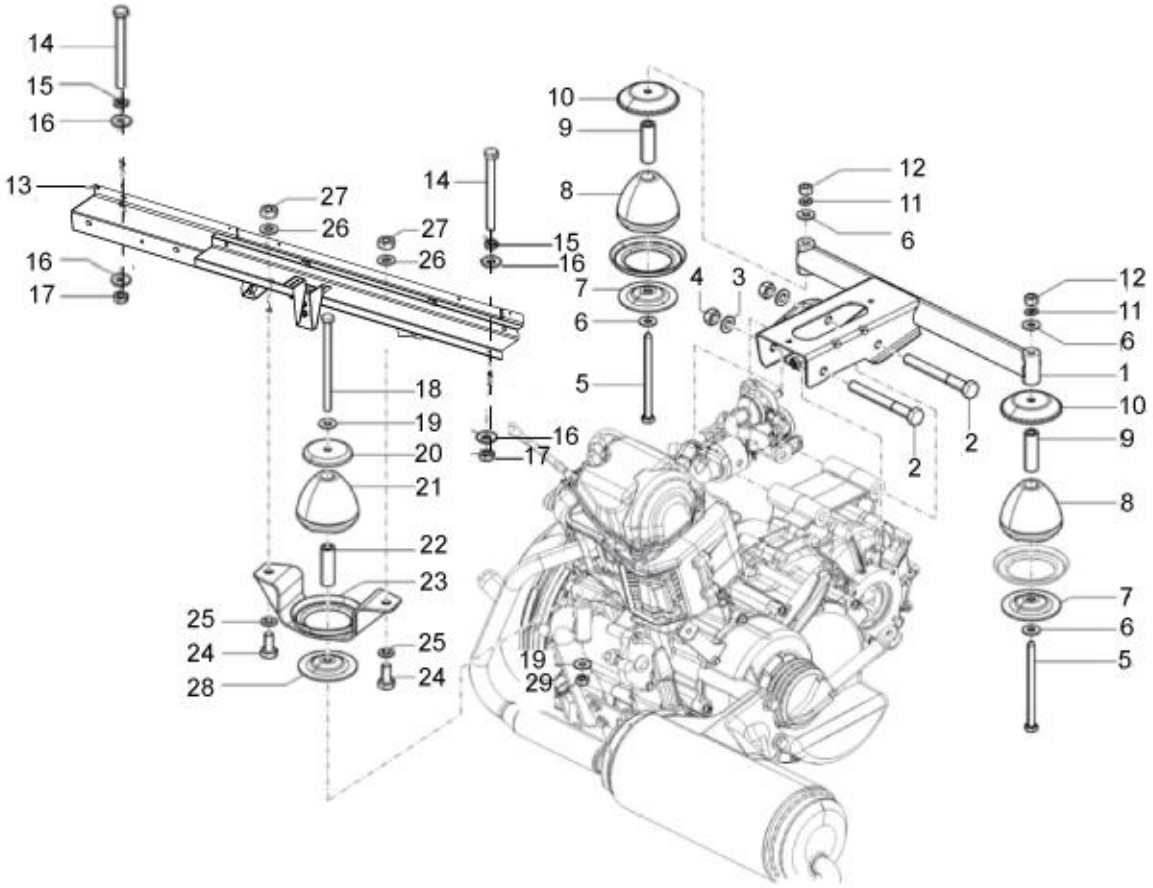
14
15
16
13
27
26
16
17
14
27
26
15
16
10
9
8
7
6
5
4
3
12
11
6
12
11
6
1
10
9
8
7
6
5
2
2
18
19
20
21
22
23
25
24
28
25
24
16
17
19
29

47

Print Date: 07-Apr-2022

PLATE-22

ENGINE MOUNTING

Fig. No.	Part No.	Description	Qty	Remarks
1	6A001201	CROSS MEMBER S/A ENGINE SUPPORT FRONT	1	
2	568689	HEX HEAD BOLT M10X100	2	
3	286328	PLAIN WASHER 20X10.2X2	2	
4	231370	SELF BREAKING NUT M10	2	
5	604948	HEX.HDD BOLT M8 X 110 WITH POINTING	2	
6	2383	PLAIN WASHER M20X8.5X2	4	
7	569244	PLATE	2	
8	265091	DUMPER ENGINE MTG.	2	
9	569241	SPACER	2	
10	569377	PLATE	2	
11	016408	SPRING WASHER	2	
12	15335	HEX HD NUT M8	2	
13	6A001196ED	ASSLY, REAR CROSS MEMBER ENGINE SUPPORT-ED	1	
14	604887	HEX HEAD BOLT M8X140	2	
15	016408	SPRING WASHER	2	
16	2383	PLAIN WASHER M20X8.5X2	4	
17	20108	HEX NUT M8	2	
18	272178	HEX. HDD BOLT M8 X 122 CL 10.9	1	
19	2383	PLAIN WASHER M20X8.5X2	2	
20	569375	PLATE	1	
21	265091	DUMPER ENGINE MTG.	1	
22	569241	SPACER	1	
23	B003286	REAR AVM SUPPORT BKT. ASSY.	1	
24	31154	HEX HDD SCREW M10X22 CL 8.8	2	
25	16410	SPRING WASHER	2	
26	286328	PLAIN WASHER 20X10.2X2	2	
27	20110	HEX NUT M10	2	
28	569244	PLATE	1	
29	20108	HEX NUT M8	1	

48

Print Date: 07-Apr-2022

PLATE-23

Windshield /Glass/ Seats/ Carpets/Mirrors &Engine Door.

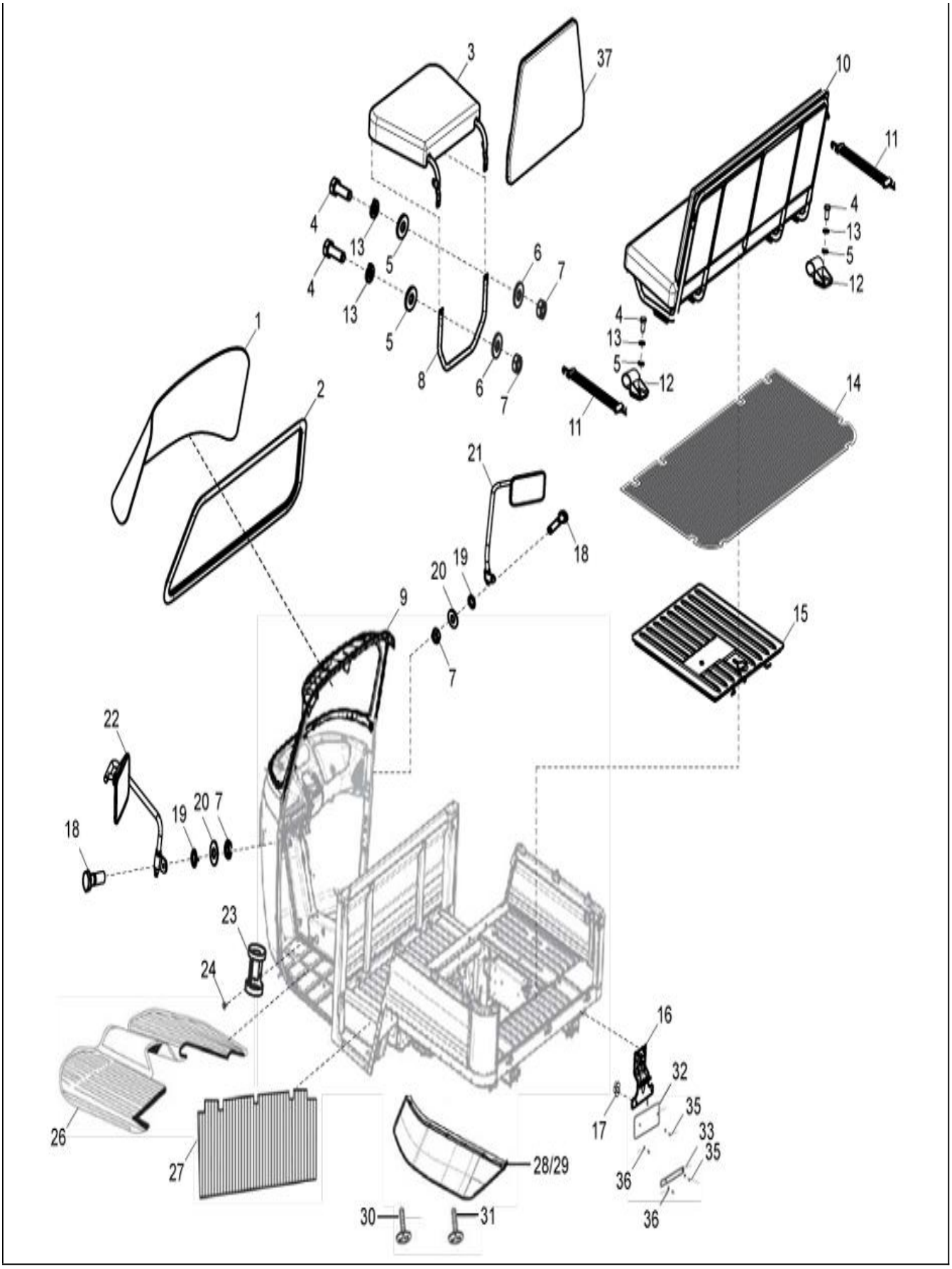
3
37
10
11
4
13
5
12
6
7
1
2
8
14
21
18
20
19
9
15
22
23
24
16
32
35
17
33
26
27
28/29
36
30
31

49

Print Date: 07-Apr-2022

PLATE-23

Windshield /Glass/ Seats/ Carpets/Mirrors &Engine Door.

Fig. No.	Part No.	Description	Qty	Remarks
1	6B001921	LAMINATED WINSHIELD GLASS	1	Appli.forÃ?Â New Windshield 6B000142ED
1	587963	LAMINATED WINSHIELD GLASS	1	Appli.for old Windshield B076098ED
2	109012	WIND SHIELD PACKING	1	for Ape auto Dx (D+3)
3	6B001057	DRIVER SEAT ASSLY	1	Included 5 , 7 , 8 ,9,13
4	31119	HEX HD SCREW M8 X 25	2	
5	016408	SPRING WASHER	2	
6	2383	PLAIN WASHER M20X8.5X2	4	
7	20108	HEX NUT M8	2	
8	B078044	DRIVER SEATSUPPORT PIPE (PASS)	1	Under Development
9	6B000387ED	WINDSHIELD ASSLY(MODI.) - ED	1	Appli.forÃ?Â New Windshield Glass 6B001921
9	B076098ED	WINDSCREEN FRAME ASSLY - C/O 501 BSIV DSL	1	Appli.for old Windshield Glass 587963
10	6B000935	PASSENGER SEAT ASSLY (DXL) (ALT FUEL)	1	
11	587907	BELT,PASSENGER SEAT RETAINER	2	
12	569096	HINGE S/A	2	
13	3058	PLAIN WASHER 15X8.4X1.5	2	
14	6B002015	REAR CARPET	1	
15	660207ED	ENGINE INSPECTION DOOR 501 CNG/LPG	1	
16	6B001118	BRACKET ASSLY-REAR HSRP MTG	1	
17	261323	NUT	2	
18	30072	HEX HEAD BOLT M8 X 35	2	
19	12540	SPRING WASHER M8	2	
20	13861	PLAIN WASHER 20X8.2X2.5	2	
21	6B001496R	RIGHT REAR-VIEW MIRROR (D+3)	1	for Ape auto Dx (D+3)
22	6B001495R	LEFT REAR-VIEW MIRROR (D+3)	1	for Ape auto Dx (D+3)
23	645141	BOTTLE CARRIER STAND	1	
24	660168	PAN SELF TP. SCREW 10 SGX13AB	2	
25	B074637	BEEDING DOME SIDE PILLAR (PET/DLS)	2	NI
26	6B002009	FRONT CARPET CNG	1	CNG
26	B041794	FRONT CARPET PAX CNG/LPG	1	LPG
27	661493	PASSENGER COMPARTMENT CARPET (UPGRADE)	1	
28	B073274	REAR PANEL RH (PLASTIC)	1	
29	B073275	REAR PANEL LH (PLASTIC)	1	
30	15911	PAN SELF TAP SCREW 8SG X 16 AB	12	
31	14628	CSK SELF TP.SCREW 6SG X 16 AB	28	
32	6B001129	REGISTRATION NUMBER PLATE(HSRP)	2	

50

Print Date: 07-Apr-2022

PLATE-23

Windshield /Glass/ Seats/ Carpets/Mirrors &Engine Door.

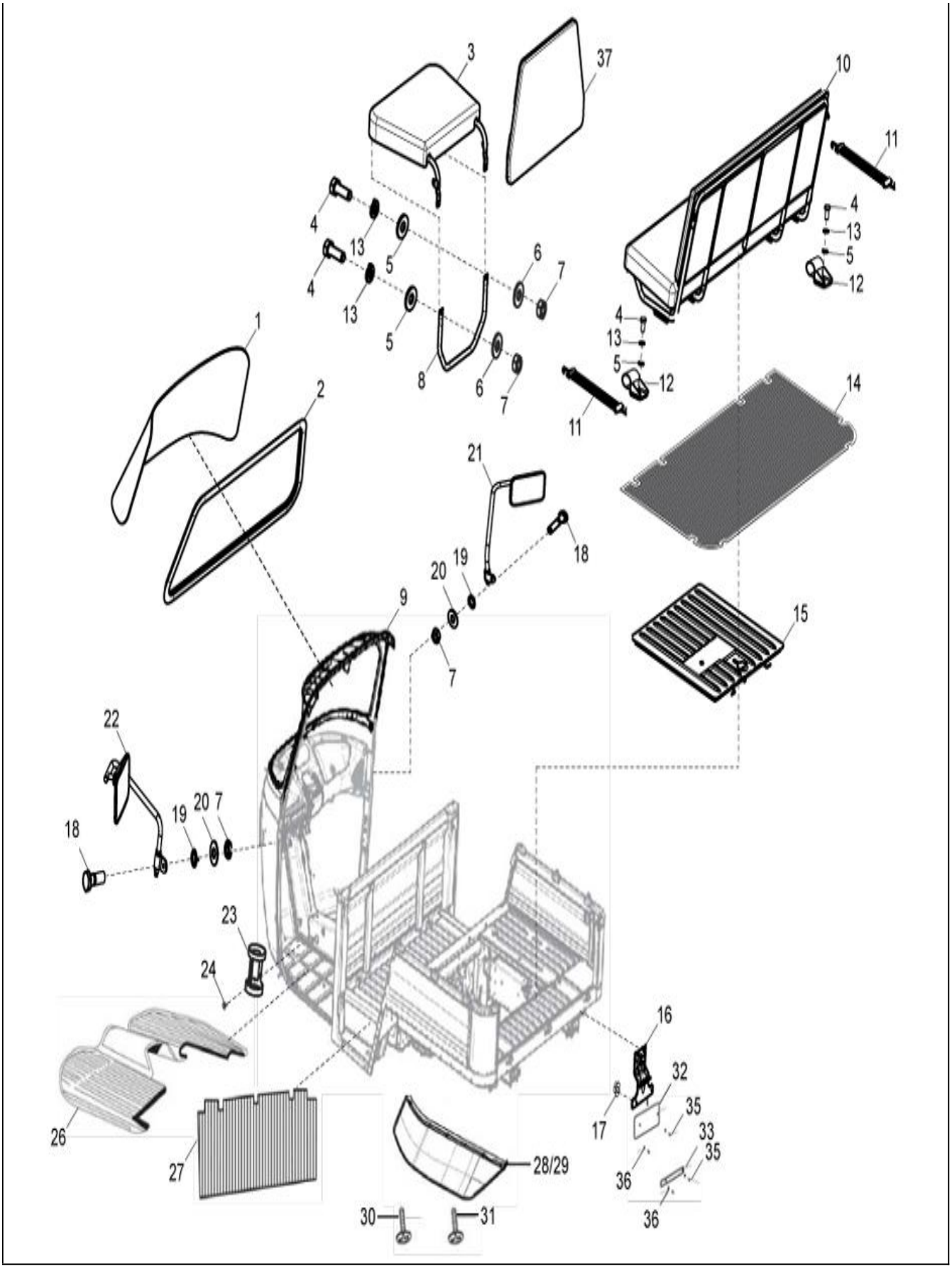
3
37
10
11
4
13
5
12
6
7
1
2
8
14
21
18
20
19
9
15
22
23
24
16
32
35
17
33
26
27
28/29
36
30
31

51

Print Date: 07-Apr-2022

PLATE-23

Windshield /Glass/ Seats/ Carpets/Mirrors &Engine Door.

Fig. No.	Part No.	Description	Qty	Remarks
33	6B001140	BRACKET ASSLY FRONT HSRP MTG	1	
34	6D000374	PIGTAIL ,LICENCE PLATE LAMP	1	NI
35	30074	HEX HEAD BOLT M8 X 40 CL 8.8	2	
36	3058	PLAIN WASHER 15X8.4X1.5	2	
37	6B001138	DRIVER BACK REST (PASS.) (VE)	1	

52

Print Date: 07-Apr-2022

PLATE-24

Hood frame MUDGUARD

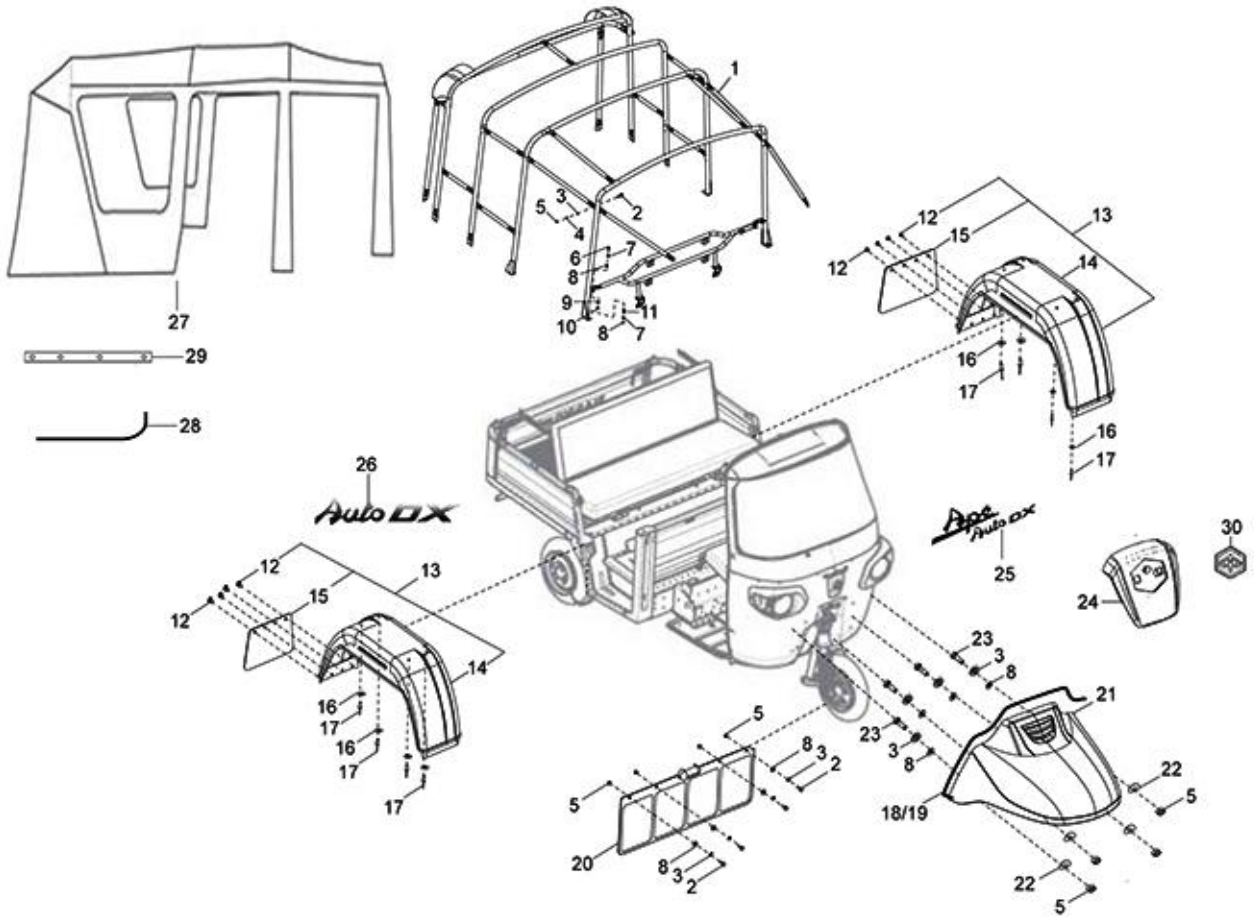
1
2
3
4
5
6
7
8
9
10
11
12
13
14
15
16
17
18/19
20
21
22
23
24
25
26
27
28
29
30
Auto DX
Ape Auto DX

53

Print Date: 07-Apr-2022

PLATE-24

Hood frame MUDGUARD

Fig. No.	Part No.	Description	Qty	Remarks
1	6B001672	KIT HOOD STRUCTURE	1	
2	31088	HEX HD SCREW M6 X 16 CL 8.8 (811061623)	10	
3	016406	SPRING WASHER	6	
4	3056	PLAIN WASHER M6 OD12	1	
5	20106	HEX NUT M6	2	
6	31116	HEX HD. SCREW M8X16	4	
7	016408	SPRING WASHER	4	
8	013880	PLAIN WASHER	6	
9	3058	PLAIN WASHER 15X8.4X1.5	6	
10	20108	HEX NUT M8	1	
11	568096	SCREW HEAD CAP SCREW M8X20 (819082037)	4	
12	142425	BUTTON	1	
13	B042612	REAR MUDGUARD RH/LH	1	
14	B042612	REAR MUDGUARD RH/LH	1	
15	142424	MUDFLAP FOR RR MUDGUARD	4	
16	16603	PLAIN WASHER (METALLIC)	1	
17	604603	RIVET	1	
18	B076801	FRONT MUDGUARD RUBBER BEADING	2	
19	B076802	FRONT MUDGUARD PARTITION RUBBER BEADING	2	
20	116103	MUD FLAP FRONT	1	
21	B075974	FRONT MUDGUARD	1	
22	78307	BENT SPRING WASHER M6	1	
23	31089	HEX HEAD SCREW M6X18 CL 8.8	1	
24	B076001	LOGO SUPPORT_CITY UPGRADE	1	
25	B078878	STICKER DECAL FR. DOME (APE AUTO DX)	1	
26	B078872	STICKER DECAL SIDE PANEL (AUTO DX)	1	
27	6B001987	SOFT TOP ASSLY BLACK	1	
27	6B001988	SOFT TOP ASSLY YELLOW	1	
27	6B001989	SOFT TOP ASSLY YELLOW (BLACK INNER)	1	
28	643752	LATERAL PROFILE FOR COVER	2	
29	643753	SECTION BAR FOR HOOP NO. 1(VE)	1	
30	B076120	HEXAGONAL EMBLEM	2	
31	6B001978	BS6 LOGO	1	

54

Print Date: 07-Apr-2022

PLATE-25

FUEL TANK/FILTER/FUEL PIPES - GAS

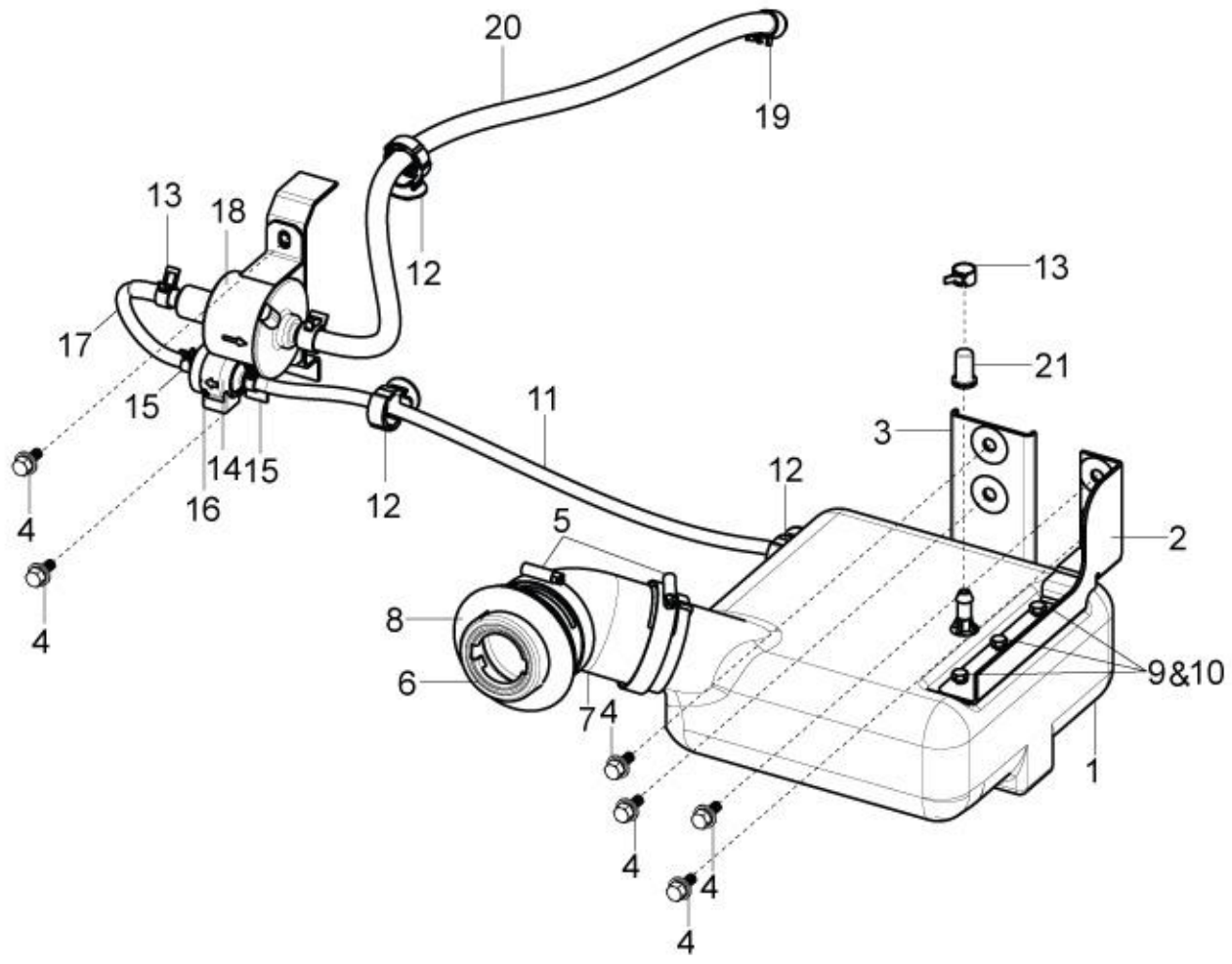
20
19
13
18
12
13
17
21
15
11
3
14
15
12
12
4
16
5
2
4
8
9&10
6
7
4
1
4
4
4

55

Print Date: 07-Apr-2022

PLATE-25

FUEL TANK/FILTER/FUEL PIPES - GAS

Fig. No.	Part No.	Description	Qty	Remarks
1	B077271	S/A PLATIC FUEL TANK (3L)	1	
2	B077216	ASSY. FRONT BRACKET, PLASTIC FUEL TANK	1	Under Development
3	B077217	BOTTOM SUPPORT, PLASTIC FUEL TANK	1	Under Development
4	D9166140616	BOLT, W/WASHER	6	
5	B041853	HOSE CLIP (SIZE : 65A)	2	
6	B003115	TUBE FUEL TANK FILLER ASSY	1	
7	B077277	HOSE PLASTIC FUEL TANK	1	
8	6A000233	GROMMET FOR FILLER NECK	1	
9	31056	HEX HEAD SCREW M5 X 12 CL. 8.8	3	
10	16405	SPRING WASHER M5	3	
11	B076406	FUEL PIPE - FUEL FILTER TO CARBURATOR-PTL	1	
12	B076007	PIPE CLIP 1 WAY	3	
13	662571	HOSE CLAMP	3	
14	B041798	SPRING BAND HOSE CLAMP DIA 8.6	2	
15	B074593	COMPACT FUEL STRAINER (3 L/H)	1	
16	B075790	FUEL FILTER SUPPORT	1	
17	B075337	FUEL PIPE-TANK TO SMALL FILTER-CITY PTL	1	
18	B002630	ELECTRICAL FEED PUMP LGA 280 PETROL ENGI	1	Old Type
18	6A001657	ASSY ELE. FUEL PUMP (PRICOL)	1	New Type-Can be Interchangeable with Old Type
18	6D001087	PIGTAIL, FUEL FEED PUMP(PRICOL)	1	New Type-Can be Interchangeable with Old Type
19	632109	HOSE CLAMP BRAKE PIPE	2	
20	6A001307	FUEL PIPE, FEED PUMP TO CARBURATOR	1	
21	B074963	PLUG-TANK RETURN NIPPLE	1	

56

Print Date: 07-Apr-2022

PLATE-26

DASHBOARD ASSLY COMPLETE & LOCK SET

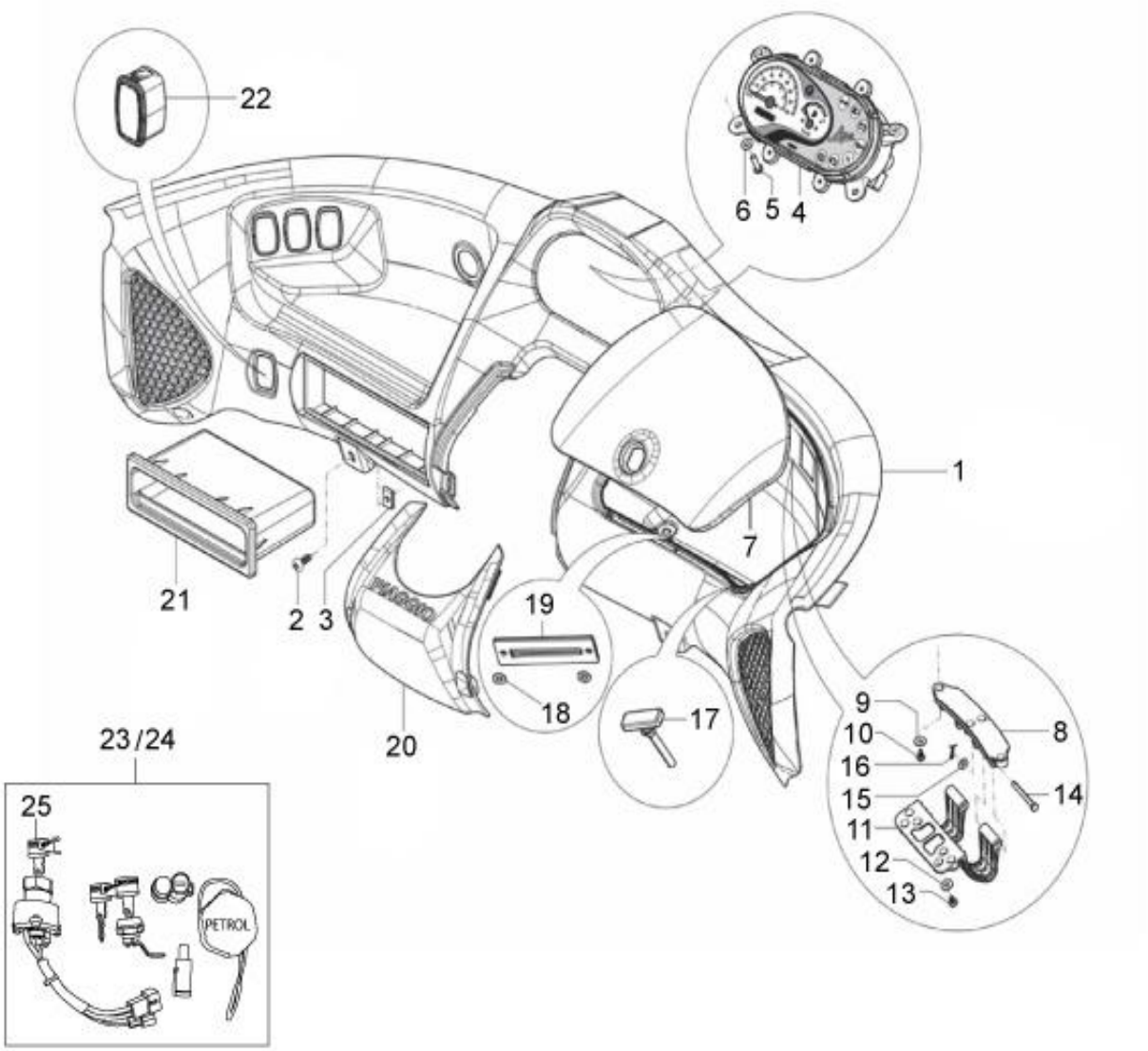
22
6 5 4
1
7
21
2 3
19
18
20
17
9
10
16
15
11
12
13
8
14
23/24
25
PETROL

57

Print Date: 07-Apr-2022

PLATE-26

DASHBOARD ASSLY COMPLETE & LOCK SET

Fig. No.	Part No.	Description	Qty	Remarks
1	6B002424	DASHBOARD ASSEMBLY COMPLETE-CNG	1	CNG
1	6B002425	DASHBOARD ASSEMBLY COMPLETE-LPG	1	LPG
1	B076164	DASHBOARD WITH GLOVE BOX COVER SUB ASSLY	1	Under Development
2	660168	PAN SELF TP. SCREW 10 SGX13AB	7	
3	8080	SPRING PLATE	7	
4	6D000517	INSTRUMENT CLUSTER -CNG	1	CNG
4	6D000518	INST. CLUSTER_(LPG)	1	LPG
5	661925	PHILIP PAN HEAD SCREW (M5 X 0.8 X 1.6)	4	
6	6078	PLAIN WASHER 12 X 5.2 X 1	4	
7	B073810	GLOVE BOX COVER	1	
8	B073813	HINGE MTG. BKT.	1	
9	16670	PLAIN WASHER 12X4.5X1	4	
10	B074261	PHIL RD HD SCREW M4	4	Under Development
11	B073814	HINGE	1	
12	16670	PLAIN WASHER 12X4.5X1	6	
13	B074261	PHIL RD HD SCREW M4	6	Under Development
14	B074262	PIN	2	
15	3055	PLAIN WASHER M5	2	
16	567920	SPLIT PIN	2	
17	B074275	RUBBER DAMPER	2	
18	3054	PLAIN WASHER	2	
19	643691	BOLT LOCK PLATE	1	
20	B073811	STEERING COLUMN COVER	1	
21	B073812	UTILITY BOX	1	
22	B075732	FUEL CHANGE OVER SWITCH	1	
23	6G000032	LOCK SET WITH KEYS CNG /LPG PASS - PB	1	CNG/LPG
25	B024532	KEY IGNITION SWITCH W/COUPLER (PAVNA)	1	

58

Print Date: 07-Apr-2022

PLATE-27
HANDLEBARS

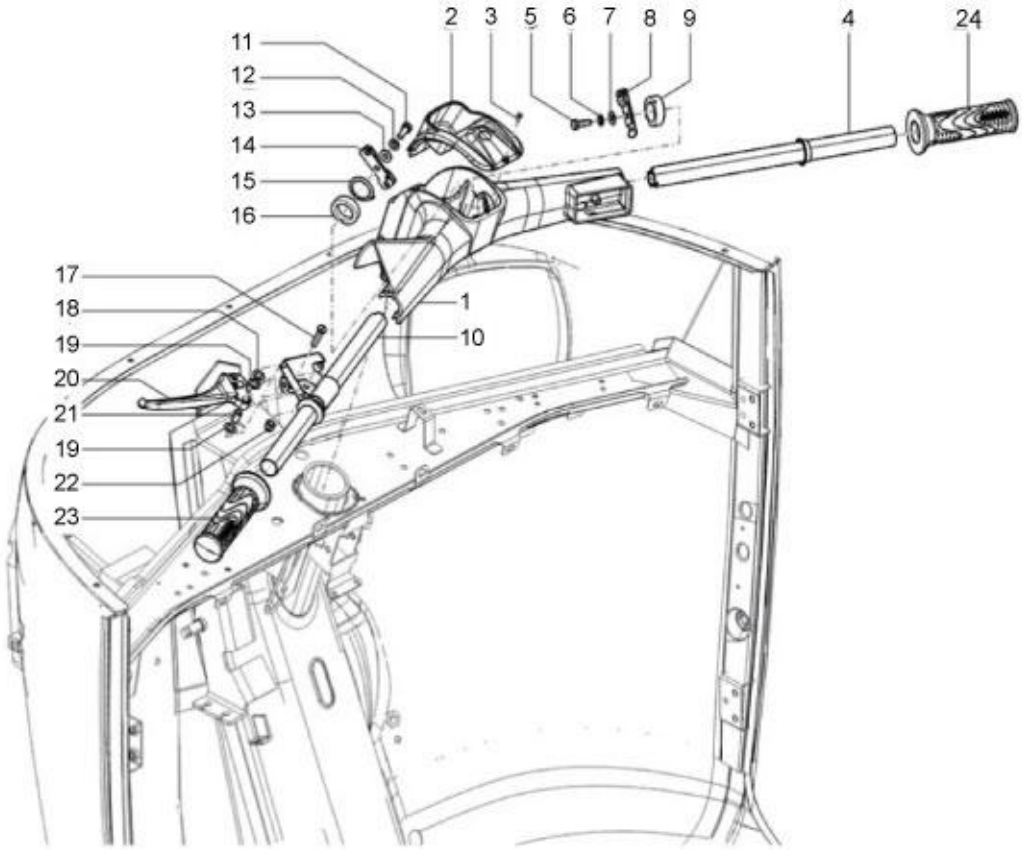
2
3
5
6
7
8
9
4
24
11
12
13
14
15
16
17
18
19
20
21
19
22
23
1
10

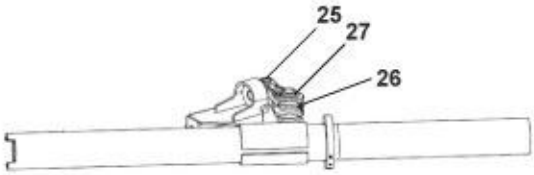
25
27
26

59

Print Date: 07-Apr-2022

PLATE-27
HANDLEBARS

Fig. No.	Part No.	Description	Qty	Remarks
1	B075687ED	HANDLE BAR BODY-ED	1	
2	B041600	HANDLE BAR COVER	1	
3	632158	CSK HEAD SCREW	1	
4	587902	ACCELERATOR TUBE ASSY.	1	
5	31089	HEX HEAD SCREW M6X18 CL 8.8	1	
6	16406	SPRING WASHER M6 OD12	1	
7	16626	PLAIN WASHER (18X10.5X2)	1	
8	B079248	ACCELERATOR TUBE SUPPORT BKT RH	1	
9	587904	SINTERED WASHER HANDLE BAR (41769)	1	
10	6A001249	GEAR CHANGE CONTROL TUBE ASSY	1	
11	31089	HEX HEAD SCREW M6X18 CL 8.8	1	
12	16406	SPRING WASHER M6 OD12	1	
13	16626	PLAIN WASHER (18X10.5X2)	1	
14	109775	GEAR CONTROL LEVER S/A	1	
15	60565	SPRING WASHER	1	
16	109404	WASHER OF RABBET(41737)	1	
17	632158	CSK HEAD SCREW	1	
18	16319	BENT SPRING WASHER	1	
19	16620	PLAIN WASHER	2	
20	6A001637	LEVER, CLUTCH CONTROL	1	
21	125181	SPACER	1	
22	12138	NYLOCK NUT M6	1	
23	B073848	HANDLE BAR GRIP - LH	1	
24	B073849	HANDLE BAR GRIP - RH	1	
25	1E002771	LEVER, CLUTCH SWITCH	1	
26	1E002772	SPRING TORSION	1	
27	6A000209	CIRCLIP FOR SHAFT ID 9.3	1	Under Development

60

Print Date: 07-Apr-2022

PLATE-28
WINDSCREEN WIPER

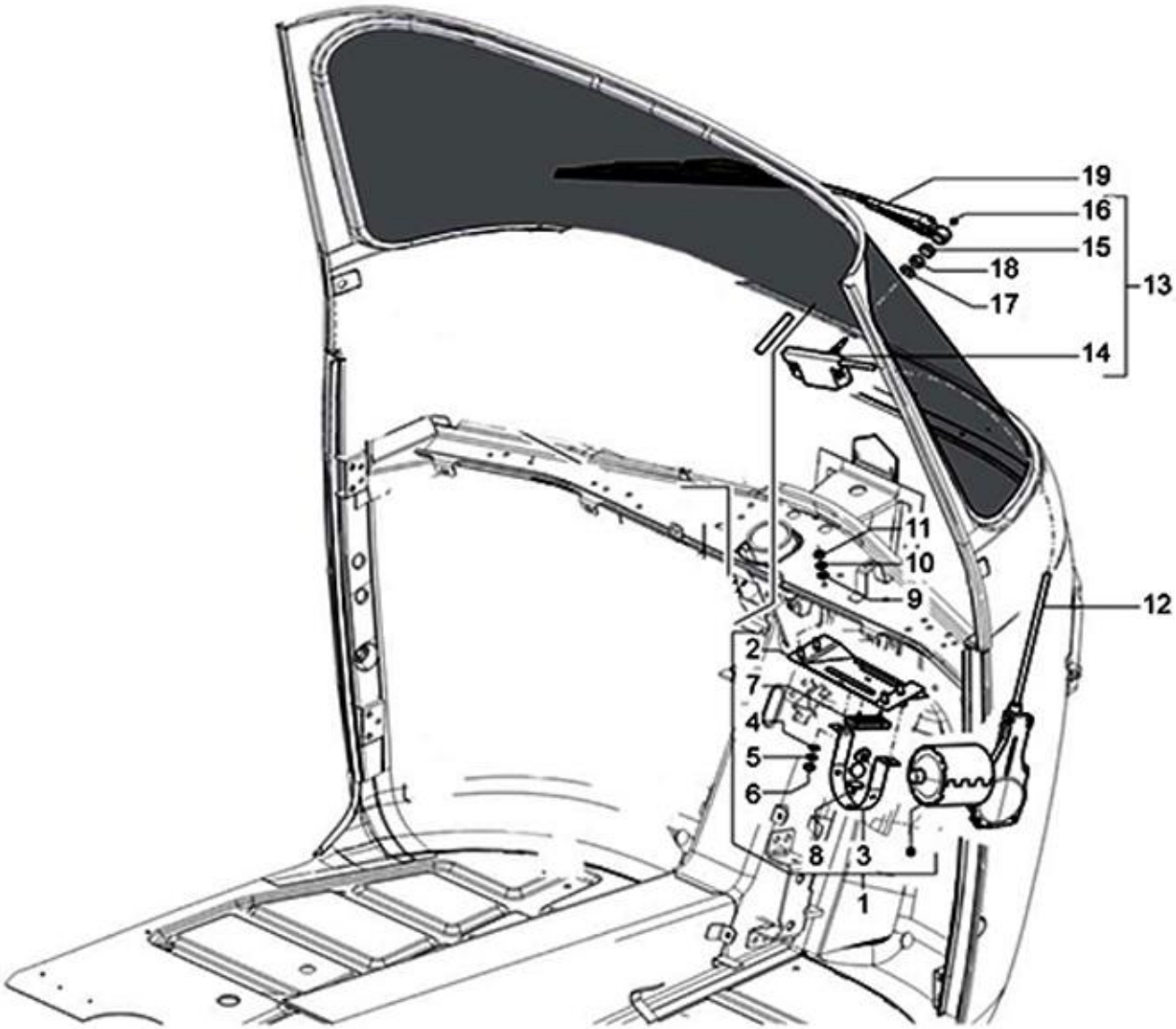
19
16
15
18
17
13
14
11
10
9
12
2
7
4
5
6
8
3
1

61

Print Date: 07-Apr-2022

PLATE-28
WINDSCREEN WIPER

Fig. No.	Part No.	Description	Qty	Remarks
1	632995	WIPER MOTOR ASSY. WITH MTG. BKT.	1	
2	569166	WIPER MOTOR MOUNTING BRACKET	1	
3	569177	STRAP ASSY FOR WIPER MOTOR (N.I.)	1	
4	16406	SPRING WASHER M6 OD12	2	
5	3056	PLAIN WASHER M6 OD12	2	
6	20106	HEX NUT M6	2	
7	569178	RUBBER PAD FOR WIPER MOTO (N.I.)	1	
8	925571	CABLE RACK (033200/PGO)	1	NI
9	3056	PLAIN WASHER M6 OD12	4	
10	16406	SPRING WASHER M6 OD12	4	
11	20106	HEX NUT M6	4	
12	B076303	BUNDY TUBE (MOTOR TO WHEEL BOX)	1	
12A	604506	BUNDY TUBE OUTER	1	
13	B076304	WHEEL BOX ASSY. (MOD.)	1	
14	NS	NOT SERVICEABLE	1	
15	NS	NOT SERVICEABLE	1	
16	569165	DOME NUT	1	
17	6173	METALLIC PLAIN WASHER (808001026)	1	
18	20106	HEX NUT M6	1	
19	632292	WIPER ARM & BLADE ASSY	1	

62

Print Date: 07-Apr-2022

PLATE-29

SELECTORS - SWITCHES - BUTTONS

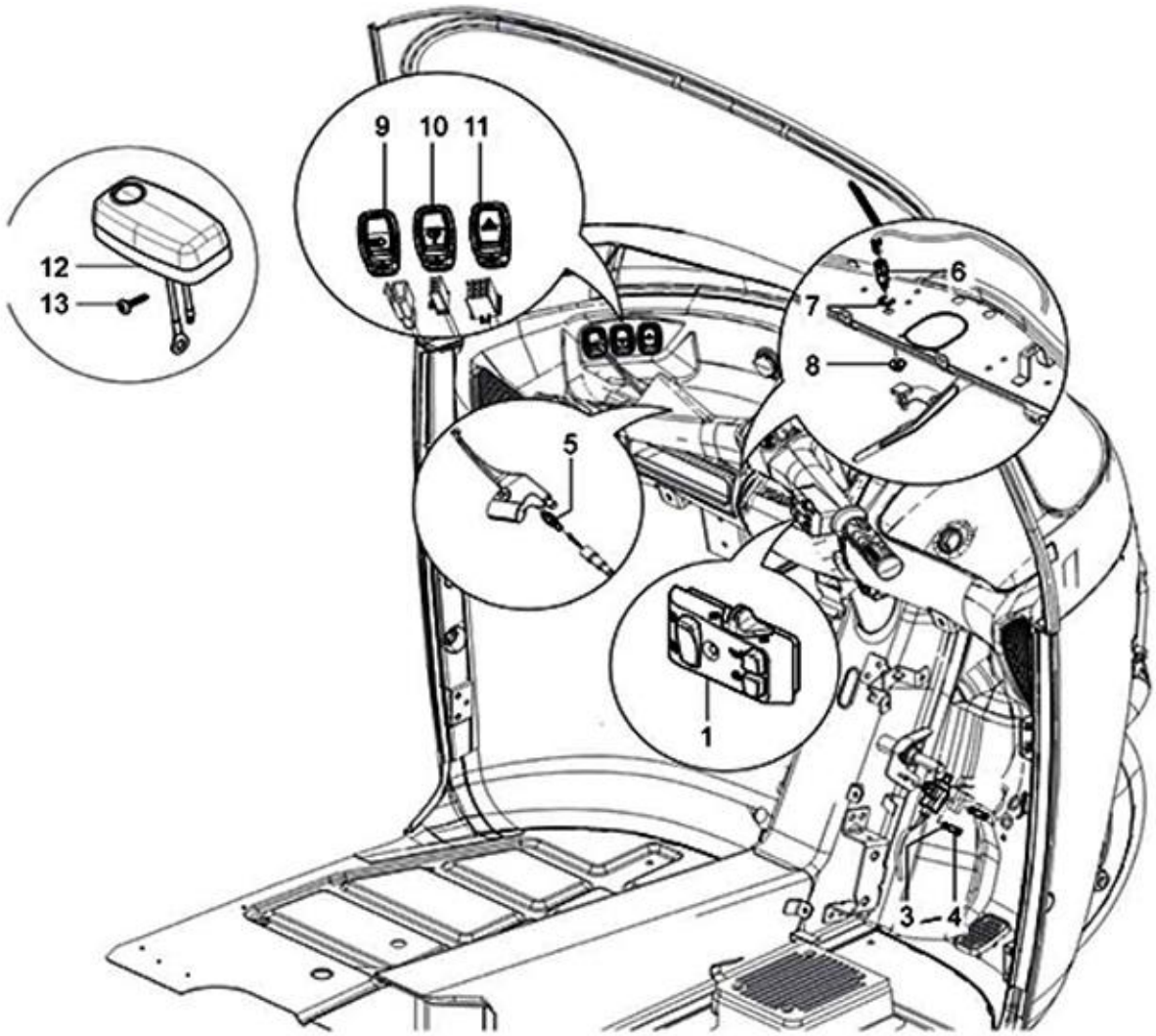
9
10
11
12
13
6
7
8
5
1
3
4

63

Print Date: 07-Apr-2022

PLATE-29

SELECTORS - SWITCHES - BUTTONS

Fig. No.	Part No.	Description	Qty	Remarks
1	B073850R	HBS (ST. BUTTON) - CITY UPGRADE (NEW) _ALL NUOVO MODEL	1	
2	567498R	BRAKE/REVERSE LIGHT SW (INTEGRAL CAP)-PAV	1	
3	3054	PLAIN WASHER	2	
4	B074568	SCREW TERMINAL	2	
5	642032	PUSH BUTTON-CLUTCH	1	
6	640762	PUSH BUTTON REVERSE	1	
7	5969	CIRCLIP DIA 9 E TYPE	1	
8	B076448	BUSH REVERSE SWITCH MTG.	1	
9	B073478R	SWITCH 3 POSITION	1	
10	B073479R	WIPER MOTOR SWITCH/ SWITCH WIPER MOTOR	1	
11	B073481R	HAZARD WARNING SWITCH WITH CROWN CAP (12V)(VE)	1	
12	B073715	CABIN LAMP	1	
13	15727	PAN SELF TAPPING SCREW	2	

64

Print Date: 07-Apr-2022

PLATE-30

ELECTRICAL DEVICES / HEAD LAMP & TAIL LAMP ASSLY.

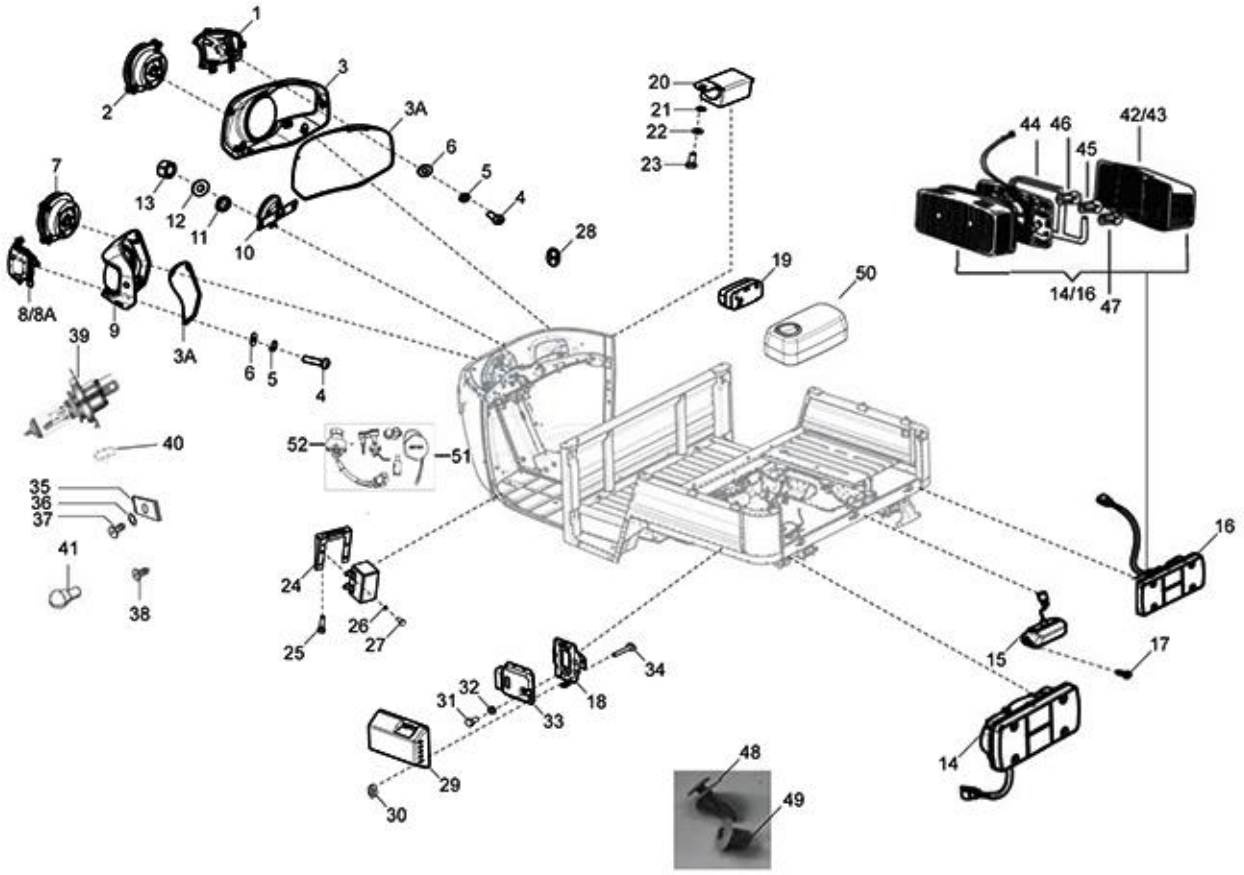
1
2
3
3A
6
5
4
20
21
22
23
44
46
45
42/43
7
13
12
11
10
28
19
50
14/16
47
8/8A
9
3A
6
5
4
39
40
52
51
35
36
37
41
38
24
25
26
27
16
15
17
34
31
32
33
18
14
29
30
48
49

65

Print Date: 07-Apr-2022

PLATE-30

ELECTRICAL DEVICES / HEAD LAMP & TAIL LAMP ASSLY.

Fig. No.	Part No.	Description	Qty	Remarks
1	6D000146R	FRONT DIRECTION INDICATORS RH	1	E - Marked (Export)
1.A	B078272	BLINKER HOUSING (RH)-(HOUSING + GLASS)	1	E - Marked (Export)
2	6D000144R	HEAD LAMP ASSLY - RH (NUOVO)	1	E - Marked (Export)
3	B076000	HEAD LAMP COVER RH	1	
3A	B076191	HL BEZEL BEADING	2	
4	661925	PHILIP PAN HEAD SCREW (M5 X 0.8 X 1.6)	6	
5	16405	SPRING WASHER M5	6	
6	6078	PLAIN WASHER 12 X 5.2 X 1	6	
7	6D000143R	HEAD LAMP ASSLY LH - NUOVO	1	E - Marked (Export)
8	6D000145R	FRONT DIRECTION INDICATORS LH	1	E - Marked (Export)
8A	B078274	BLINKER HOUSING (LH)-(HOUSING + GLASS)	1	E - Marked (Export)
9	B075999	HEAD LAMP COVER LH	1	
10	B074033	HORN ASSLY(DIA 70)	1	
11	20106	HEX NUT M6	2	
12	016406	SPRING WASHER	2	
13	3056	PLAIN WASHER M6 OD12	2	
14	B024537R	TAIL LAMP ASSLY - LH	1	
15	150915R	REGISTRATION PLATE LAMP ASSY	1	
16	643705R	TAIL LAMP ASSY. RH	1	
17	15727	PAN SELF TAPPING SCREW	2	
18	6D000417	BRACKET, ECU MOUTING ASSLY	1	
19	150041R	CABIN LIGHT ASSY. (W/O BULB)	1	
20	6D000305	FLASHER RELAY (BG LI-IN)	1	
21	12546	PLAIN WASHER / MULTI TOOTH LOCK WASHER M5	2	
22	3055	PLAIN WASHER M5	1	
23	31057	HEX HEAD SCREW M5 X 14 CL 8.8	2	
24	6D000265	BKT, FUSE BOX MOUNTING FRONT ASSEMBLY	1	
25	B001386	HEX HEAD SCREW M5X20	2	
26	3058	PLAIN WASHER 15X8.4X1.5	8	
27	31116	HEX HD. SCREW M8X16	8	
28	20105	PLAIN NUT M5	2	
29	6D000550	COVER, ECU PROTECTION	1	
30	B075855	M4 HEX FLANGE NUT	8	
31	B075965	FLANGED HEX HEAD SCREW M5 X 14	4	
32	016408	SPRING WASHER	2	

66

Print Date: 07-Apr-2022

PLATE-30

ELECTRICAL DEVICES / HEAD LAMP & TAIL LAMP ASSLY.

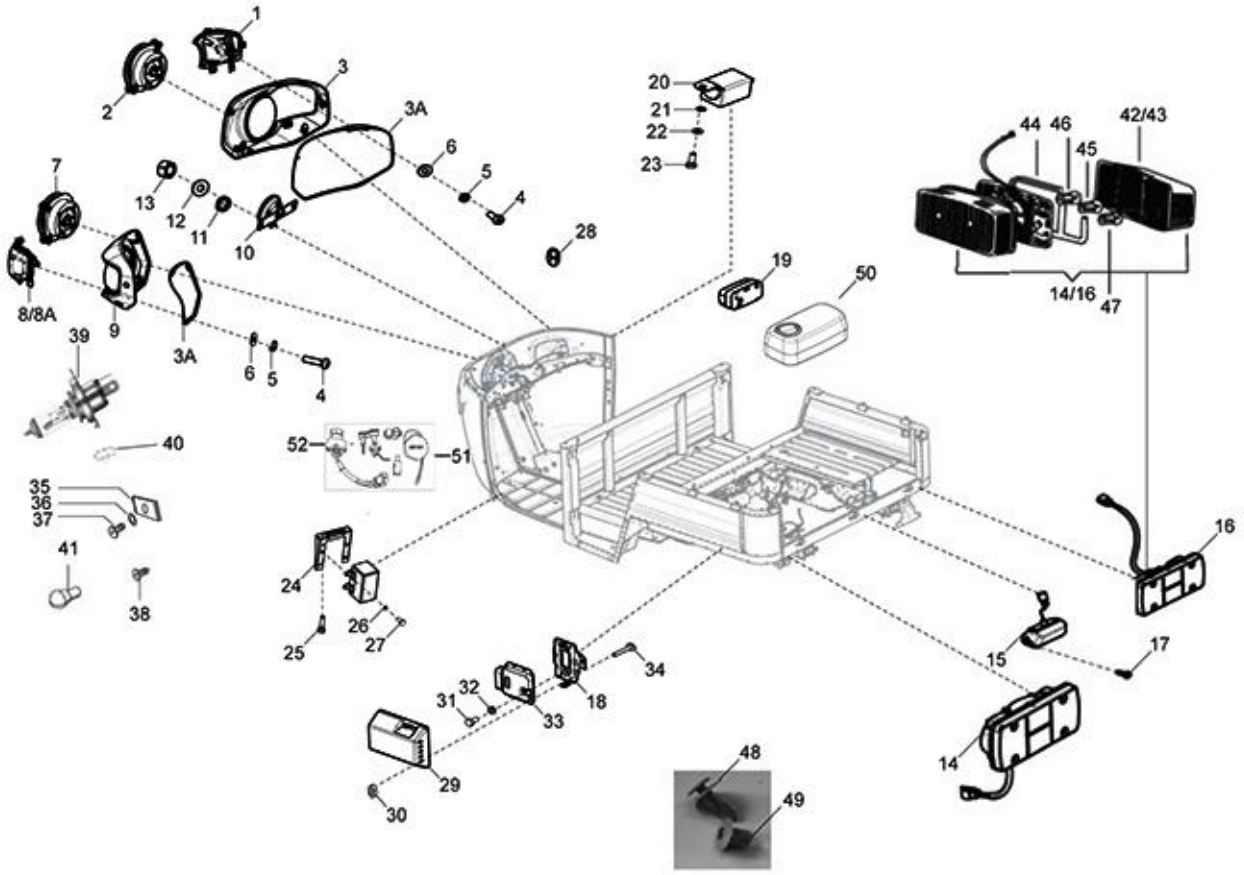
1
2
3
3A
6
5
4
7
13
12
11
10
28
8/8A
9
3A
6
5
4
39
40
52
51
35
36
37
41
38
24
25
26
27
20
21
22
23
19
50
44
46
45
42/43
14/16
47
16
15
17
14
34
18
33
31
32
29
30
48
49

67

Print Date: 07-Apr-2022

PLATE-30

ELECTRICAL DEVICES / HEAD LAMP & TAIL LAMP ASSLY.

Fig. No.	Part No.	Description	Qty	Remarks
33	CM309508	ELECTRONIC DEVICE-CNG	1	CNG
33	CM309507	ELECTRONIC DEVICE - LPG	1	LPG
34	B074327	BOLT	4	Not Serviceable
35	8080	SPRING PLATE	4	
36	3055	PLAIN WASHER M5	4	
37	660168	PAN SELF TP. SCREW 10 SGX13AB	4	
38	B074539	PHILIPS COUNTER HEAD SCREW	6	
39	B078286R	HS1_BULB (12 V _35/35W	2	
40	567593	BULB 12V 5W / LAMP 4W	2	
41	925581	INDICATOR LIGHT BULB 12V 21W AMBER COLOUR	2	
42	920083	TAIL LAMP LENSE LH WITH HARDWARE & GASKET	2	
43	920084	TAIL LAMP LENSE RH WITH HARDWARE & GASKET	2	
44	925603	PACKING	2	
45	181746	INDICATOR BULB 12V 10W	2	
45	925581	INDICATOR LIGHT BULB 12V 21W AMBER COLOUR	2	
46	567700	BULB 10/5W (STOP LIGHT)	2	
47	181747	REVERSE LAMP BULB 12V 5W	2	
48	B076606	GROMMET	4	
49	B076605	PIN	4	
50	B073715	CABIN LAMP	1	
51	6G000032	LOCK SET WITH KEYS CNG /LPG PASS - PB	1	
52	B024532	KEY IGNITION SWITCH W/COUPLER (PAVNA)	1	

68

Print Date: 07-Apr-2022

PLATE-31

STEERING COLUMN & FRONT SUSPENSION

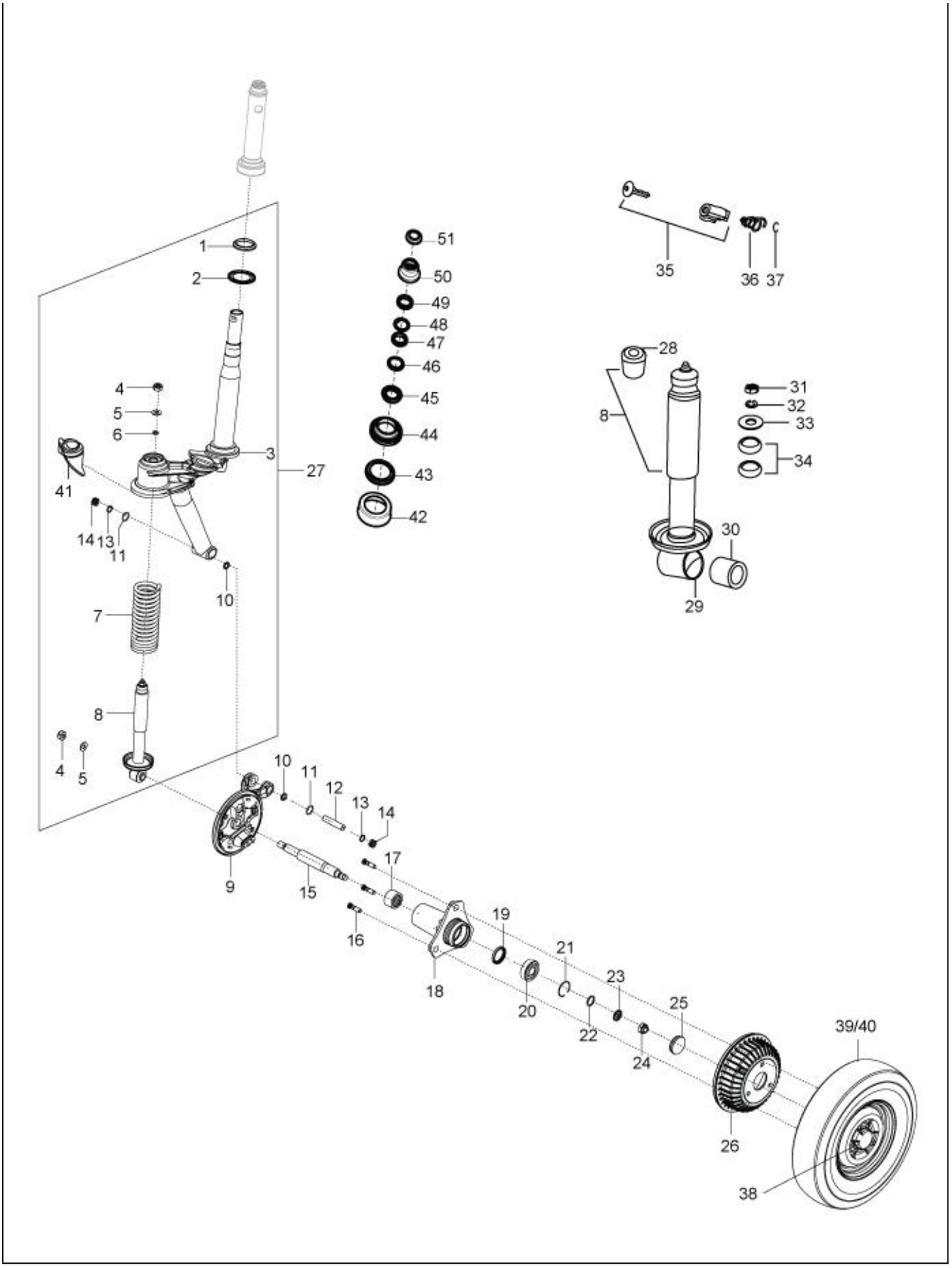
1
2
3
4
5
6
7
8
9
10
11
12
13
14
15
16
17
18
19
20
21
22
23
24
25
26
27
28
29
30
31
32
33
34
35
36
37
38
39/40
41
42
43
44
45
46
47
48
49
50
51

69

Print Date: 07-Apr-2022

PLATE-31

STEERING COLUMN & FRONT SUSPENSION

Fig. No.	Part No.	Description	Qty	Remarks
1	567993	BEARING RACE LOWER BOTTOM	1	
2	109066	WASHER WITH PROTECTION FOR BEARING	1	
3	B076859	STEERING COLUMN WITH I.P. (501 STD)	1	STEERING COLUMN WITH BKT Wheel CARRIER
3	6C000475SP	STEERING COLUMN WITH BKT WITH CARRIER _SPD	1	
4	568095	NYLOCK NUT	2	
5	87067	PLAIN WASHER 30.5X14.3X2	2	
6	16410	SPRING WASHER	1	
7	569255	FRONT SUSPENSION SPRING	1	
8	569246R	FRONT SHOCK ABSORBER	1	
9	6C000275	BRACKET WHEEL CARRIER WITH PI	1	
10	8771	OIL SEAL (18-24-4)	2	
11	6733	O RING	2	
12	137235	STEERING PIN	1	
13	150579	RING FOR HOLDING TYPE J F101 17A	2	
14	107718	ROLLER BUSH	2	
15	643772R	FRONT WHEEL AXLE	1	
16	652520	BOLT FOR AXLE M12 X 40 (VE WHEEL RIM)	3	
17	125289	NEEDLE BEARING, CRANKASE, FRONT WHEEL	1	
18	652521	FR. WHEEL HUB ASSY.	1	
19	136434	OIL SEAL	1	
20	30209R	BALL BEARING FRONT WHEEL HUB	1	
21	107870	ELASTIC RING	1	
22	567473	CIRCLIP DIA. 42 INT. (841004203)	1	
23	180431	COIN WASHER	1	
24	74521	NUT M14 X 1.5	1	
25	107871	CAP	1	
26	152580	BRAKE DRUM APE - 501	1	
27	6C000474SP	FRONT SUSPENSION ASSLY XTRA DX COMPLETE_SPD	1	
28	75708	SILENT BLOCK	1	
29	107732	BUSH FOR SILENT BLOCK	1	
30	566545	RUBBER BUSH (FRT SHOCK ABSORBER) - MODIFIED	1	
31	20110	HEX NUT M10	1	
32	16410	SPRING WASHER	1	
33	6066	PL WASHER 10.5X38X9	1	
34	74414	RUBBER BUSH/BUFFER FOR COUPLING SHOCK ABSORBE	1	

70

Print Date: 07-Apr-2022

PLATE-31

STEERING COLUMN & FRONT SUSPENSION

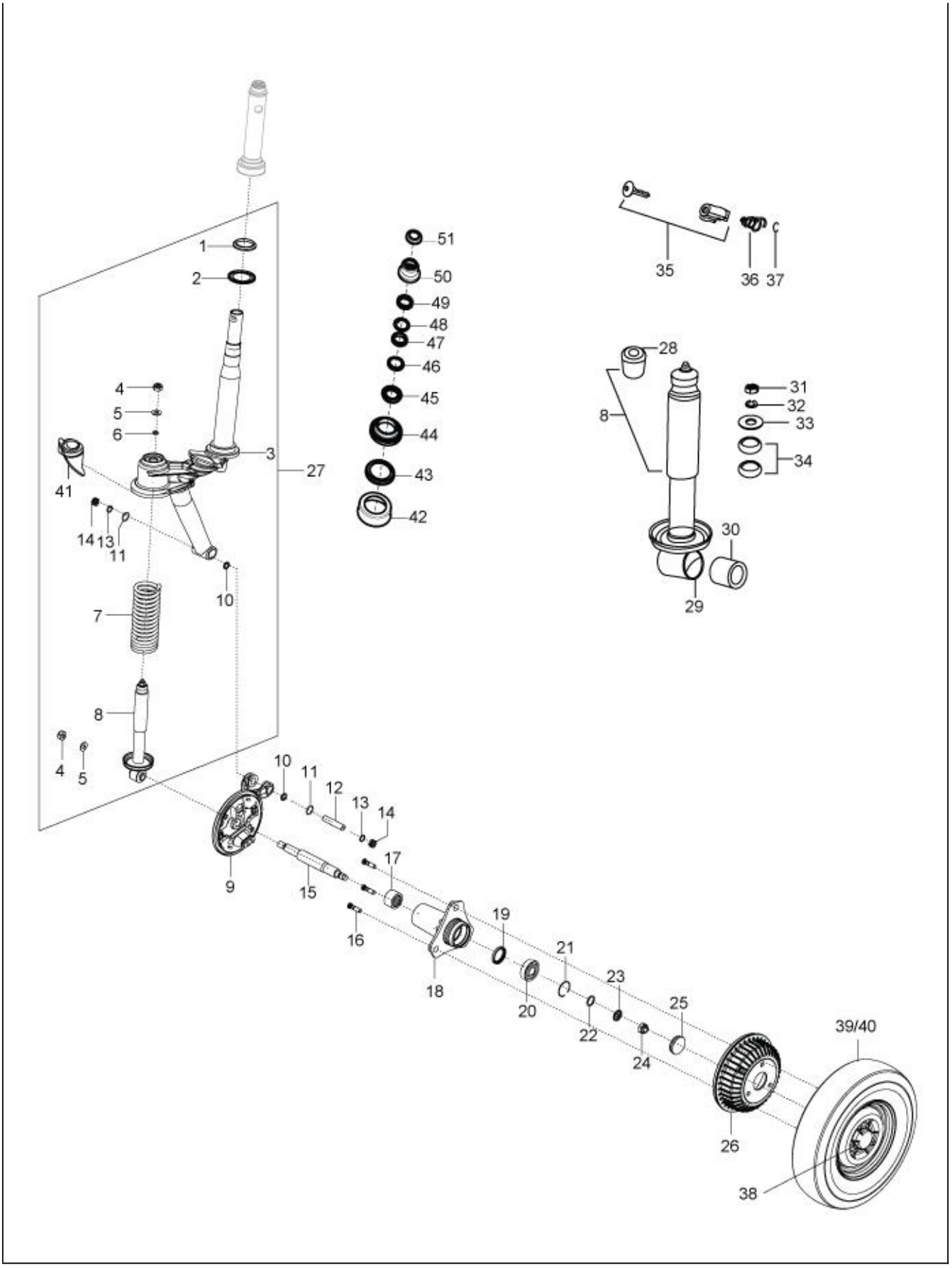
1
2
3
4
5
6
7
8
9
10
11
12
13
14
15
16
17
18
19
20
21
22
23
24
25
26
27
28
29
30
31
32
33
34
35
36
37
38
39/40
41
42
43
44
45
46
47
48
49
50
51

71

Print Date: 07-Apr-2022

PLATE-31

STEERING COLUMN & FRONT SUSPENSION

Fig. No.	Part No.	Description	Qty	Remarks
35	B001561	STG LOCK ASSLY WITH KEY	1	
36	569150	SPRING; STEERING LOCK (MODIFIED)	1	
37	661231	CIRCLIP STEERING LOCK DIA 16 (INT)	1	(Qty. front & Rear)
38	644973R	WHEEL RIM ASSY.	3	(Qty. front & Rear)
39	587971	TYRE 4.50 X 10 8 PR	3	(Qty. front & Rear)
40	151924	INNER TUBE TYRE 4.5 X 10 INCH	3	
41	109265	SPLASH GUARD DUST COVER	1	
42	109064	DUST COVER	1	
43	6C000191	LOWER BALL CAGE (VE)	1	
44	567992	BEARING RACE LOWER TOP	1	
45	567990	BEARING RACE UPPER BOTTOM	1	
46	6C000190	UPPER BALL CAGE (VE)	1	
47	567991	BEARING RACE UPPER TOP	1	
48	108873	STOP WASHER FOR HOLDING	1	
49	108874	SECURING RING NUT	1	
50	604758	PROTECTION	1	
51	604759	RUBBER CAP STEERING COLUMN (N.I.)	1	NI
52	KIT96033R	MODIFIED BALL KIT FOR 3WH (WHITE)	1	NI
53	KIT95021R	STEERING CONE SET (UPPER)	1	NI
54	KIT95022R	STEERING CONE SET (LOWER)	1	NI
55	KIT96016R	KIT OF STEERING CONE & BALL KIT	1	NI
56	KIT940003R	STEERING PIN KIT WITH O RING	1	

72

Print Date: 07-Apr-2022

PLATE-32

REAR SUSPENSION - SHOCK ABSORBER/S & ENGINE SUPPORT

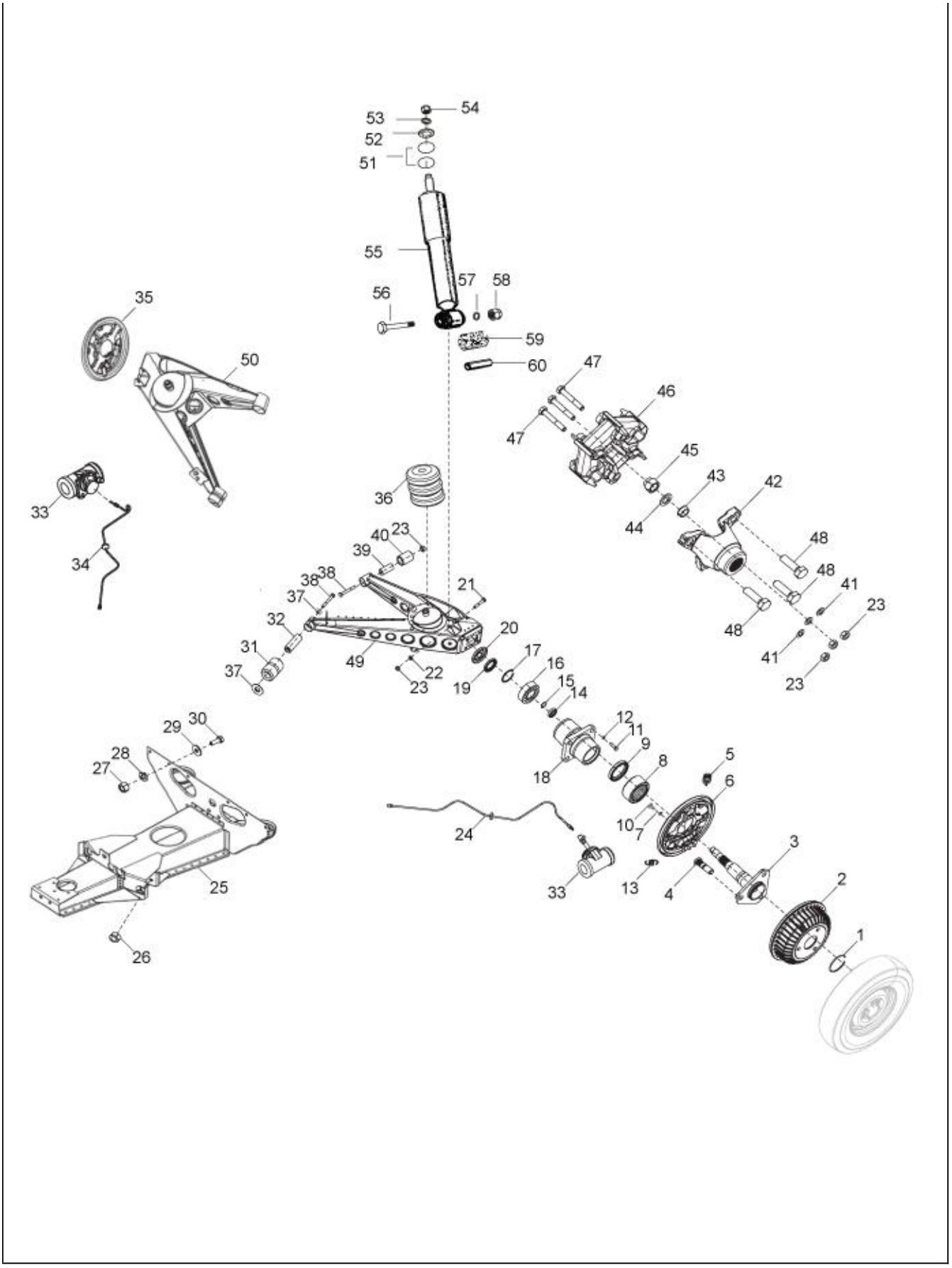
53
54
52
51
55
57
58
56
59
60
35
50
47
46
47
45
43
42
44
33
36
48
40
23
39
48
34
38
38
41
37
21
23
32
20
48
31
17
41
49
16
37
22
15
23
19
14
23
12
29
30
11
9
28
27
8
5
18
6
10
7
24
3
33
13
4
2
25
1
26

73

Print Date: 07-Apr-2022

PLATE-32

REAR SUSPENSION - SHOCK ABSORBER/S & ENGINE SUPPORT

Fig. No.	Part No.	Description	Qty	Remarks
1	107870	ELASTIC RING	2	
2	152580	BRAKE DRUM APE - 501	2	
3	6C000060	WHEEL AXLE	2	
4	652520	BOLT FOR AXLE M12 X 40 (VE WHEEL RIM)	6	
5	602497	JAWS STOP SPRINGS	2	
6	6C000279	JAW-SUPPORT DISK FOR RIGHT WHEEL WITH AS	1	
7	12536	SPRING WASHER	4	
8	661282	NEEDLE ROLLER BEARING	2	
9	20359	SEAL RING	1	
10	63440	BOLT M6X12	4	
11	31159	HEX HD SCREW M10 X 35 CC 8.8	4	
12	16410	SPRING WASHER	4	
13	116088	SPRING SUPPORTING JAWS	2	
14	661267	RING	2	
15	137026	SPRING RING	2	
16	243303R	DEEP GROVE BALL BRG-RR WH AXLE	1	
17	6650	CIRCLIP DIA 50 (INT)	2	
18	6C000662	REAR WHEEL HUB	2	
19	196302	OIL SEAL	2	
20	109892	PROTECTION CUP RR HUB	2	
21	267068	HEX HEAD BOLT M10 X 60 CC 10.9	4	
22	286328	PLAIN WASHER 20X10.2X2	4	
23	231370	SELF BREAKING NUT M10	12	
24	644813	BRAKE PUMP TUBE OF LEFT REAR WHEEL	1	
25	B075798	FRAME ASSY. SUSPENSION & ENGINE SUPPORT	1	
26	231370	SELF BREAKING NUT M10	2	
27	15335	HEX HD NUT M8	6	
28	016408	SPRING WASHER	6	
29	116831	PLAIN METALLIC WASHER (826000828)	6	
30	31119	HEX HD SCREW M8 X 25	6	
31	226596	BUSH FRONT RING FOR ELASTIC SUPPORT	2	
32	267065	SPACER FRONT	2	
33	632148	WHEEL CYLINDER ASSY. FRONT DIA. (25.4 MM)	2	
34	644812	BRAKE PUMP TUBE OF RIGHT REAR WHEEL	1	
35	6C000279	JAW-SUPPORT DISK FOR RIGHT WHEEL WITH AS	1	

74

Print Date: 07-Apr-2022

PLATE-32

REAR SUSPENSION - SHOCK ABSORBER/S & ENGINE SUPPORT

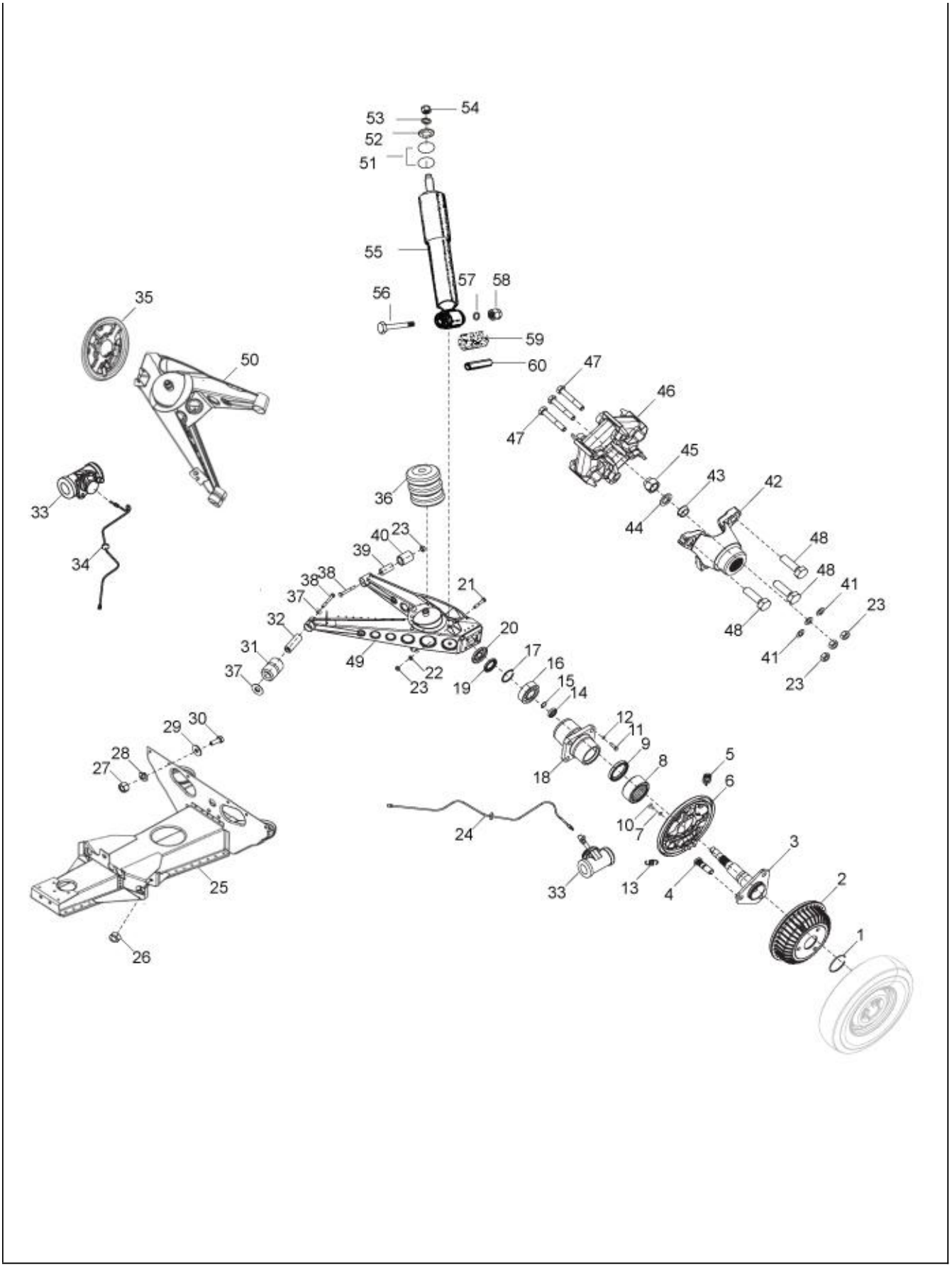
53
54
52
51
55
57
58
56
59
60
35
50
47
46
47
45
43
42
44
36
33
48
40
23
39
48
34
38
38
41
37
21
23
32
20
48
31
17
41
49
16
37
22
15
23
19
14
23
12
29
30
11
9
28
27
8
5
18
6
10
7
24
3
25
33
13
4
2
1
26

75

Print Date: 07-Apr-2022

PLATE-32

REAR SUSPENSION - SHOCK ABSORBER/S & ENGINE SUPPORT

Fig. No.	Part No.	Description	Qty	Remarks
36	568289	RUBBER BUMPER	2	
37	661266	SHOULDER WASHER	4	
38	643741	HEX HDD BOLT M10 X 80 CL 12.9	4	
39	226662	RING FOR ELASTIC SUPPORT	2	
40	226661	INTERNAL BUSH	2	
41	237246	SHIM WASHER 20X10.2X1	6	
42	587617	ELASTIC JOINT CONNECTION HUB (WHL - SIDE)	2	
43	128633	CONE	6	
44	3068	PLAIN WASHER	12	
45	231370	SELF BREAKING NUT M10	12	
46	643576	FLEXIBLE COUPLING	2	
47	15594	HEX HDD BOLT M10 X 35	6	
48	B024373	ALLEN BOLT M10X65 CL 10.9	6	
49	6C000362	ARM ASSLY LH RR SUSP. WITH BUSH-REG	1	
50	6C000363	ARM ASSLY RH RR SUSP. WITH BUSH-REG	1	
51	74414	RUBBER BUSH/BUFFER FOR COUPLING SHOCK ABSORBE	4	
52	6066	PL WASHER 10.5X38X9	2	
53	16410	SPRING WASHER	2	
54	20110	HEX NUT M10	2	
55	136451R	SHOCK ABSORBER REAR	2	
56	267068	HEX HEAD BOLT M10 X 60 CC 10.9	2	
57	286328	PLAIN WASHER 20X10.2X2	2	
58	231370	SELF BREAKING NUT M10	2	
59	157103	BUSH - SHOCK ABSORBER	2	
60	107827	SPACER	1	

76

Print Date: 07-Apr-2022

PLATE-33
DRIVE SHAFT & BELLOW

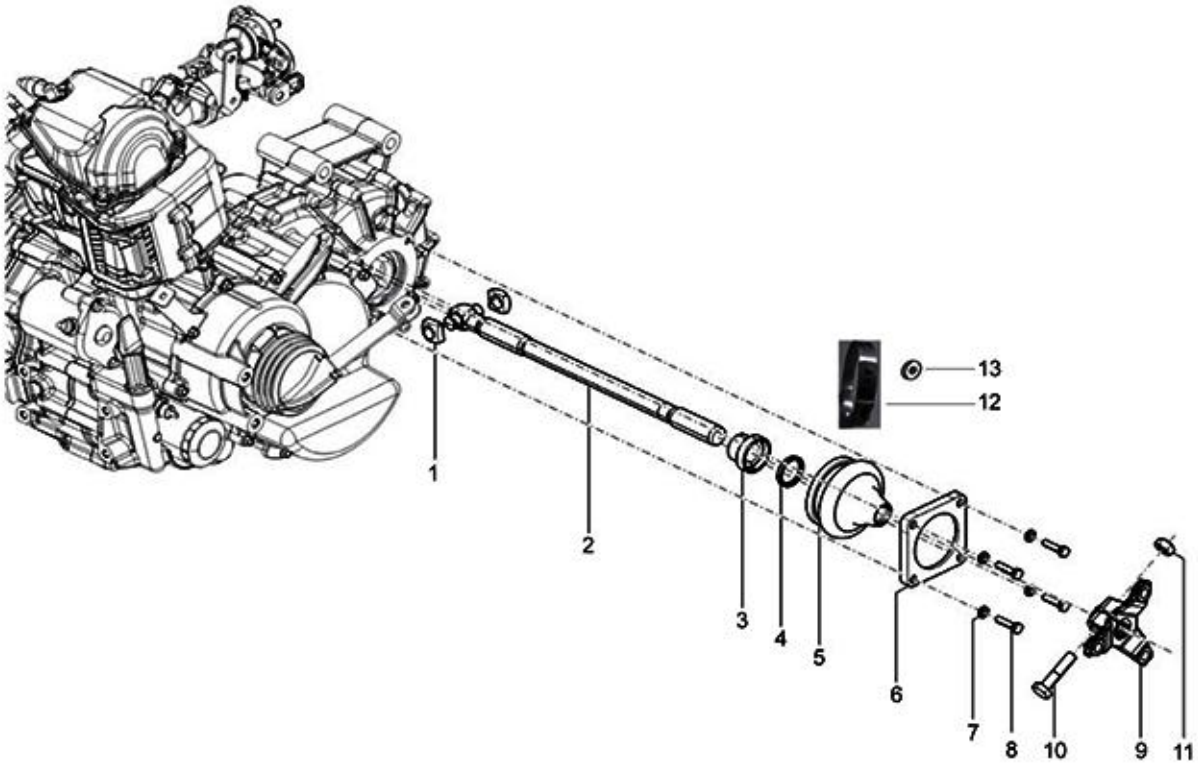
13
12
1
2
3
4
5
6
7
8
10
9
11

77

Print Date: 07-Apr-2022

PLATE-33
DRIVE SHAFT & BELLOW

Fig. No.	Part No.	Description	Qty	Remarks
1	112867R	SLIDER BLOCK PROP. SHAFT	4	
2	B078401	PROPELLER SHAFT S/A - MID BODY	2	
3	113278	BRACKET RETAINER RING (41736)	2	
4	6C000312R	SEAL RING	2	
5	6C000016	BELLOW	2	
6	111356	COVER	2	
7	16406	SPRING WASHER M6 OD12	8	
8	31092	HEX. HD SCREW M6X25	8	
9	111498	ELASTIC HUB	2	
10	B024614	HEX HEAD BOLT M10X45 CL 10.9	2	
11	231370	SELF BREAKING NUT M10	2	
12	6C000041	OTIKAR CLAMP FOR BELLOW	2	
13	3056	PLAIN WASHER M6 OD12	2	

78

Print Date: 07-Apr-2022

PLATE-34
CABLES

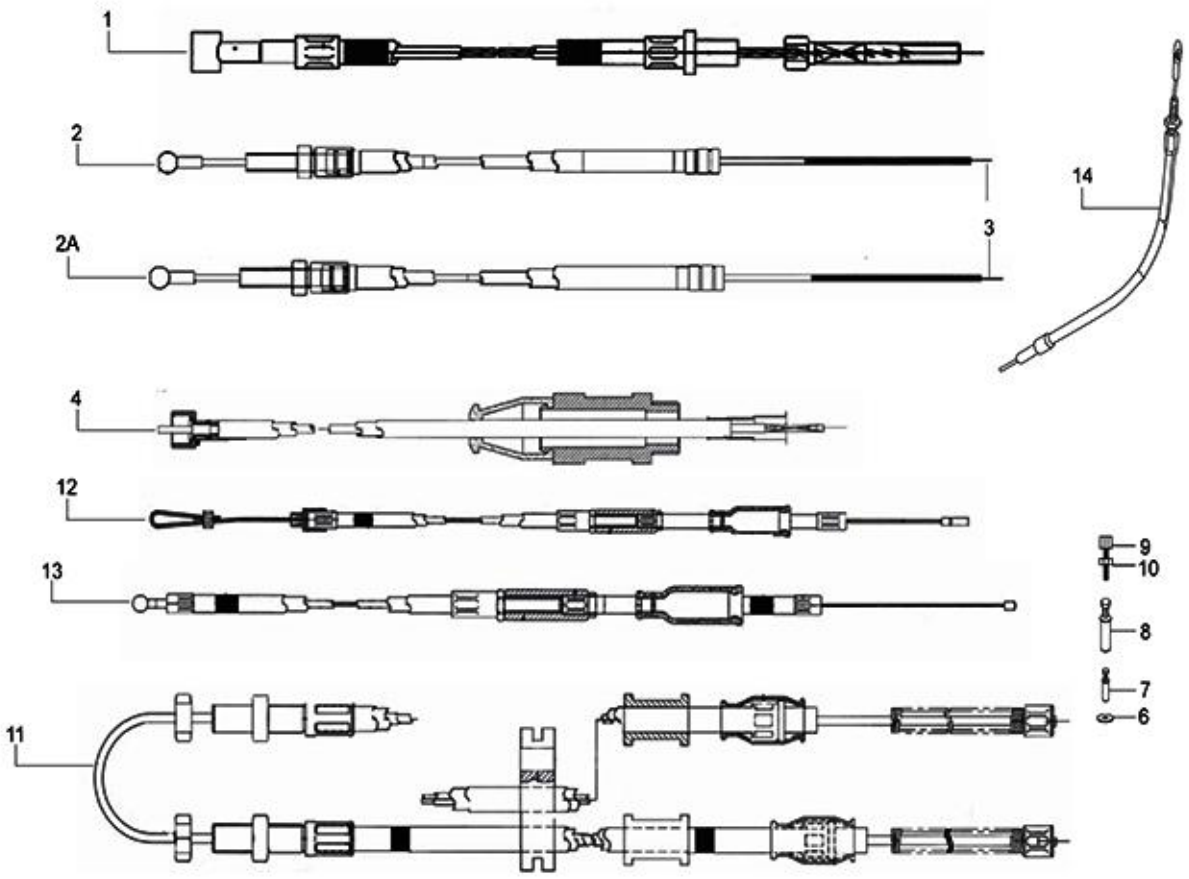
1
2
2A
3
14
4
12
13
9
10
8
7
6
11

79

Print Date: 07-Apr-2022

PLATE-34
CABLES

Fig. No.	Part No.	Description	Qty	Remarks
1	6A000804	CLUTCH CABLE	1	
2	B073469	CABLE,GEAR CONTROL ASSLY NO.2	1	
2A	B075716	CABLE,GEAR CONTROL ASSLY -WHITE	1	
3	6A000068	INNER GEAR CONTROL CABLE (BLACK/WHITE)	1	
4	B076208	SPEEDO CABLE	1	
4a	6A001834	FLEXIBLE TRANSMISSION CABLE WITH WASHER	1	NI,Speedo Inner for B076208
5	6A000070	REVERSE GEAR INNER CABLE	1	NI
6	1A008804	REVERSE CABLE REACTION BRACKET	1	
7	B076078	SCREW TERMINAL ASSLY(REVERSE CABLE)	1	
8	B076364	SCREW TERMINAL ASSY. - GEAR CONTROL	2	
9	197071	ADJUSTER SCREW M6	2	
10	20106	HEX NUT M6	2	
11	567719	CABLE,HAND BRAKE CONTROL ASSLY	1	
12	1E002514	CABLE ASSY, ACCELERATOR	1	
13	B042356	ACCELERATOR CABLE WITH JONT (NEW)	1	
14	6A001305	REVERSE GEAR CABLE	1	
15	B042566	CHOKE CONTROL CABLE ASSY	1	
16	B075960	COVER REVERSE GEAR CONTROL	1	NI

80

Print Date: 07-Apr-2022

PLATE-35

TMC & BRAKING SYSTEM & TUBES

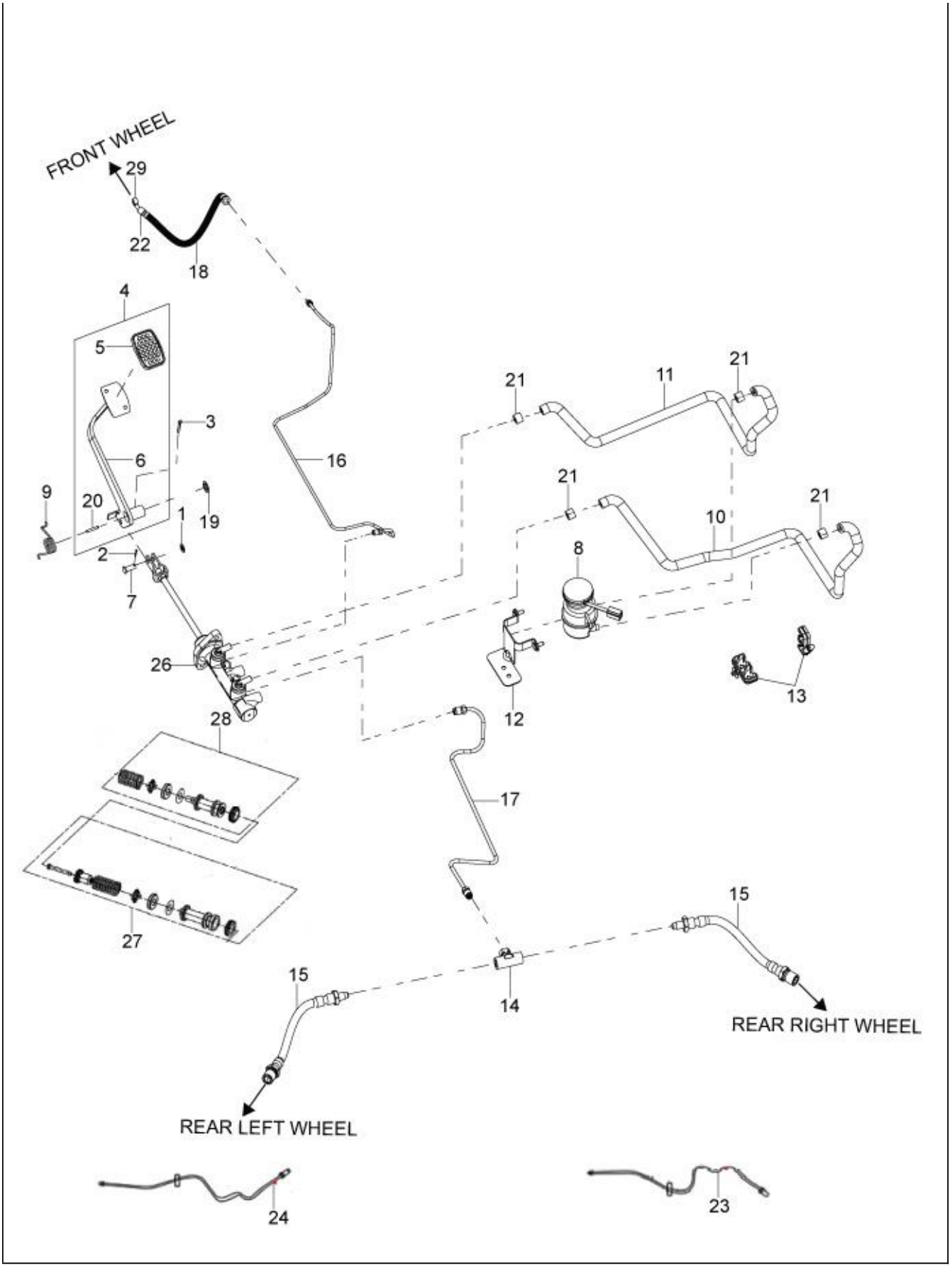
FRONT WHEEL
29
22
18
4
5
3
6
16
9
20
1
19
2
7
21
11
21
21
10
21
8
26
12
13
28
17
27
15
15
14
REAR RIGHT WHEEL
REAR LEFT WHEEL
24
23

81

Print Date: 07-Apr-2022

PLATE-35

TMC & BRAKING SYSTEM & TUBES

Fig. No.	Part No.	Description	Qty	Remarks
1	3058	PLAIN WASHER 15X8.4X1.5	1	
2	567920	SPLIT PIN	1	
3	568737	SPLIT PIN 4 X 25 (821 0425 2 2)	1	
4	604760	BRAKE PEDAL WITH FOOT REST ASSLY	1	
5	567461	RUBBER PROTECTION FOR PEDAL	1	
6	604614	FOOT BRAKE PEDAL ASSLY	1	
7	652001	PIN	1	
8	605441	RESER VE BRAKE (BRAKE OIL TANK)	1	
9	587928	FOOT BRAKE PEDAL SPRING	1	
10	6C000350	HOSE FROM OIL PUMP TO TMC	1	
11	6C000351	HOSE FROM TMC TO OIL PUMP	1	
12	6C000355	BRAKE RESERVOIR MTG BRKT ASSLY	1	Not Servicable
13	B079310	CLAMP, BRAKE HOSE	2	
14	643692	THREE WAY UNION	1	
15	644814R	FLEXIBLE BRAKE HOSE	2	
16	6C000431	BUNDY TUBE ASSY,TMC TO FRONT FLEX. HOSE	1	
17	568162	BRAKE TUBE FOR REAR WHEEL	1	
18	587624R	FLEXIBLE PIPING FOR FRONT WHEEL BRAKE R	1	
19	229524	WASHER 21X14.3X2	1	
20	31122	HEX HD. SCREW M8X30 CL 8.8	1	
21	B079310	CLAMP, BRAKE HOSE	4	
22	127927R	PACKING	2	
23	644812	BRAKE PUMP TUBE OF RIGHT REAR WHEEL	1	
24	644813	BRAKE PUMP TUBE OF LEFT REAR WHEEL	1	
25	B003228	LOCK PLATE FRONT BRAKE HOSE	1	
26	B042395	TANDEM MASTER CYL ASSLY. WITH BKT. AND FILTER UNION	1	
27	B042976	MAJOR KIT TMC (KBX 1008)	1	
28	B042977	MINOR KIT TMC (KBX 1009)	1	
29	587829	BENJO BOLT	1	

82

Print Date: 07-Apr-2022

PLATE-36

CONTROL PEDALS - LEVERS

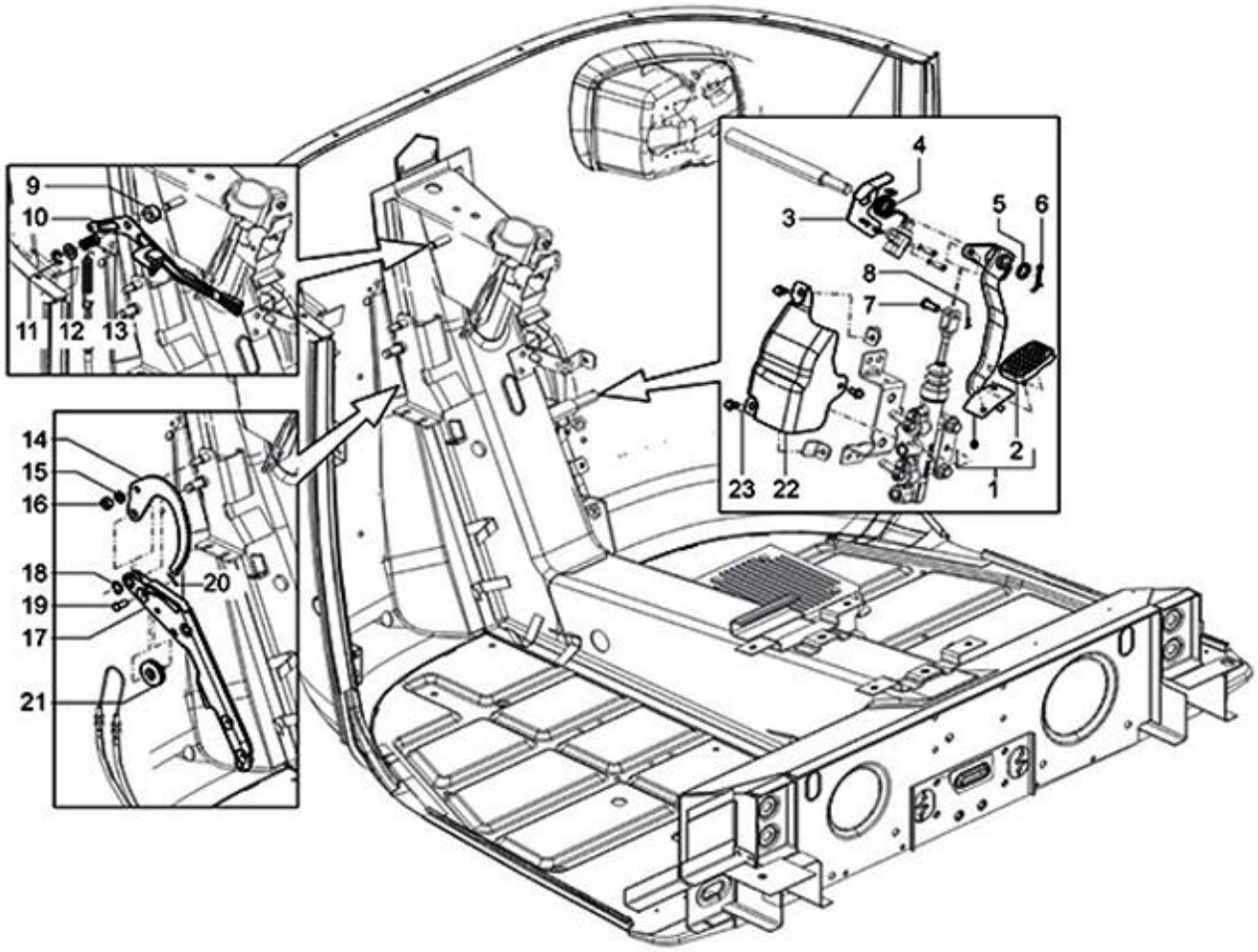
9
10
11
12
13
14
15
16
18
19
17
21
20
4
3
5
6
8
7
2
1
23
22

83

Print Date: 07-Apr-2022

PLATE-36

CONTROL PEDALS - LEVERS

Fig. No.	Part No.	Description	Qty	Remarks
1	604760	BRAKE PEDAL WITH FOOT REST ASSLY	1	
2	567461	RUBBER PROTECTION FOR PEDAL	1	
3	B075495	RACKET BRAKE SWITCH MTG. ASSLY	1	
4	587928	FOOT BRAKE PEDAL SPRING	1	
5	229524	WASHER 21X14.3X2	1	
6	568737	SPLIT PIN 4 X 25 (821 0425 2 2)	1	
7	652001	PIN	1	
8	567920	SPLIT PIN	1	
9	B042317	SPACER-RC LEVER	1	
10	B076455	LEVER S/ASSLY. REVERSE	1	
11	5969	CIRCLIP DIA 9 E TYPE	1	
12	6173	METALLIC PLAIN WASHER (808001026)	1	
13	108785	SPRING	1	
14	B042794	RATCHET , HAND BRAKE CONTROL	1	
15	016408	SPRING WASHER	1	
16	20108	HEX NUT M8	1	
17	567746G1	HAND BRAKE LEVER (WITH POWDER COATING)	1	
18	6411	EXT CIRCLIP DIA 11	1	
19	567899	CLEVIS PIN	1	
20	567920	SPLIT PIN	1	
21	567898	PULLEY FOR HAND BRAKE	1	
22	B075949	TMC PROTECTIVE SHIELD	1	Not Applicabel
23	B074999	HEX BOLT	3	Not Applicabel
24	6A001305	REVERSE GEAR CABLE	1	NI
25	604717	KNOB FOR R.C.	1	

84

Print Date: 07-Apr-2022

PLATE-37
WIRING HARNESS

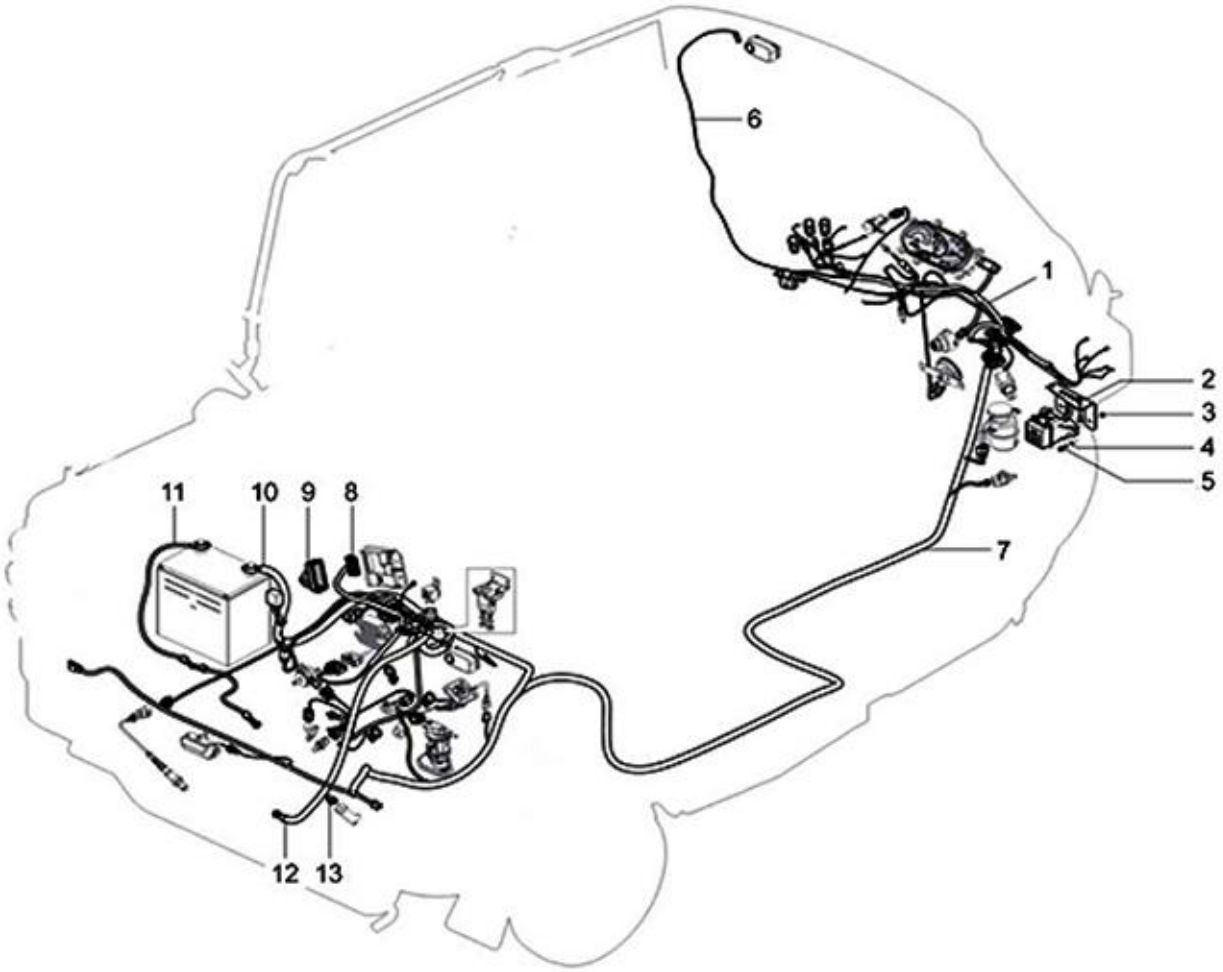
6
1
2
3
4
5
7
11
10
9
8
12
13

85

Print Date: 07-Apr-2022

PLATE-37
WIRING HARNESS

Fig. No.	Part No.	Description	Qty	Remarks
1	6D000741	WIRING HARNESS, IP	1	CNG
1	6D000744	WIRING HARNESS,IP	1	LPG
2	6D000265	BKT, FUSE BOX MOUNTING FRONT ASSEMBLY	1	
3	20105	PLAIN NUT M5	4	
4	6965	SPRING WASHER DIA 5	4	
5	31058	HEX HEAD SCREW M5 X 16 CC8.8	4	
6	661491	PIG TAIL- CABIN LAMP	1	
7	6D000742	WIRING HARNESS, MAIN	1	LPG/CNG
9	569160	RUBBER BOOT	1	
10	6D000743	BATTERY CABLE, POSITIVE	1	
11	B042063	BATTERY CABLE NEGATIVE	1	
12	B078213	BATTERY +VE CABLE-CUT STARTER MOTOR (LPG/CNG)	1	
13	1A007152	HOSE CLAMP	2	

86

Print Date: 07-Apr-2022

PLATE-38

ELECTRICAL DEVICES & BATTERY MOUNTING

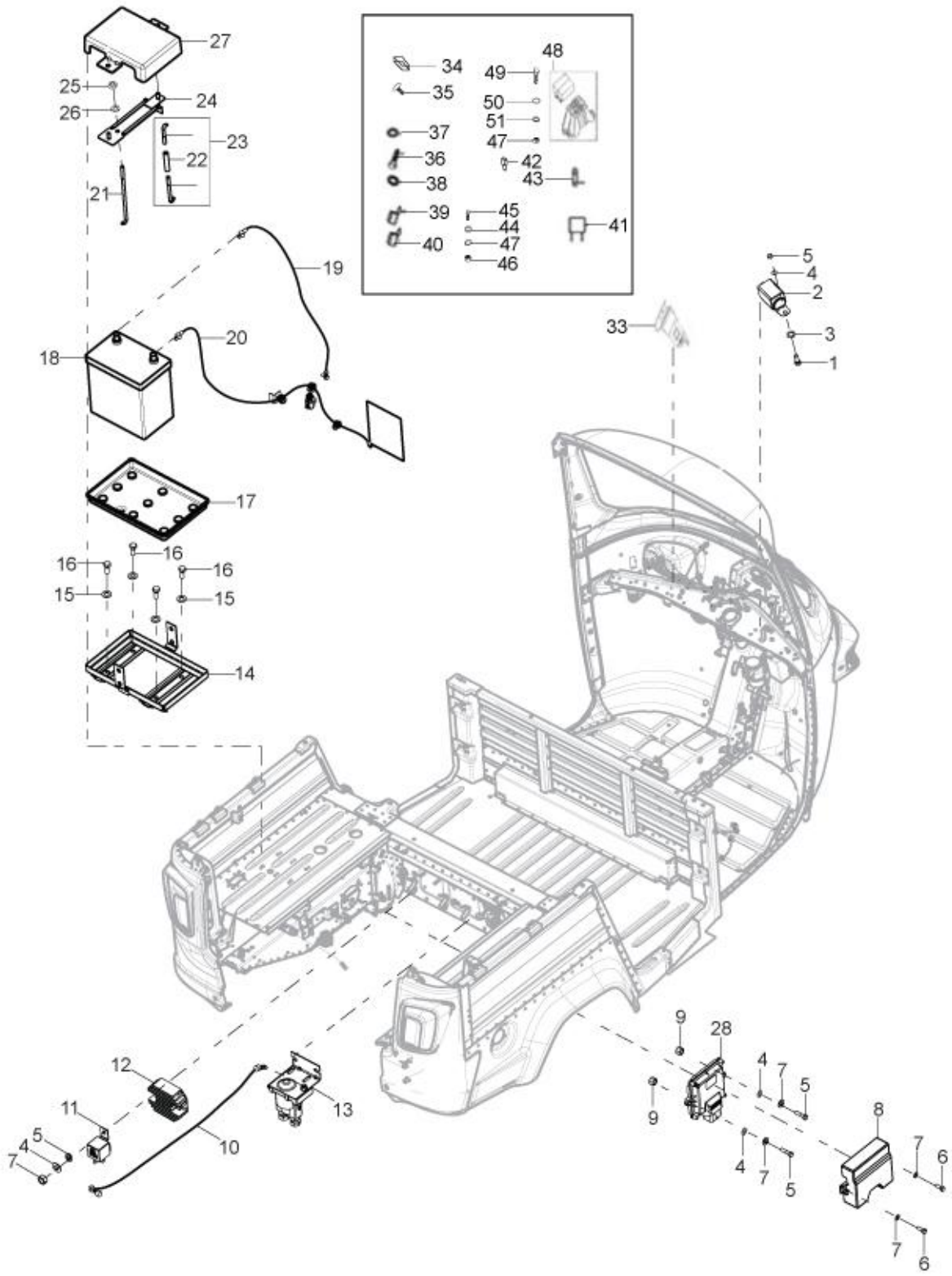
27
25
26
24
23
22
21
34
35
37
36
38
39
40
48
49
50
51
47
42
43
45
44
47
46
41
19
20
18
17
16
16
16
15
15
14
5
4
2
3
1
33
9
28
4
7
5
9
8
4
7
5
7
6
7
6
12
11
5
4
7
10
13

87

Print Date: 07-Apr-2022

PLATE-38

ELECTRICAL DEVICES & BATTERY MOUNTING

Fig. No.	Part No.	Description	Qty	Remarks
1	31057	HEX HEAD SCREW M5 X 14 CL 8.8	2	
2	6D000305	FLASHER RELAY (BG LI-IN)	1	
3	12546	PLAIN WASHER / MULTI TOOTH LOCK WASHER M5	2	
4	16405	SPRING WASHER M5	2	
5	20105	PLAIN NUT M5	2	
6	B075965	FLANGED HEX HEAD SCREW M5 X 14	2	
7	3055	PLAIN WASHER M5	1	
8	6D000550	COVER, ECU PROTECTION	1	
9	B078506	BUSH	2	
10	B078213	BATTERY +VE CABLE-CUT STARTER MOTOR (LPG/CNG)	1	
11	B023726R	REMOTE CONTROL SWITCH	1	
12	1D000671R	VOLTAGE REGULATOR	1	
13	587671R	4 ST RELAY SOLENOID	1	
14	6D000717	BATTERY CARRIER BASE ASSLY	1	
15	3056	PLAIN WASHER M6 OD12	4	
16	31088	HEX HD SCREW M6 X 16 CL 8.8 (811061623)	4	
17	616649	BATTERY TRAY	1	
18	652253R	BATTERY 12V-35AH	1	
19	B042063	BATTERY CABLE NEGATIVE	1	
20	6D000743	BATTERY CABLE, POSITIVE	1	
21	604954	TENSION ROD	1	
22	604890	HALF TIE ROD ASSY.	1	
23	632508	TENSION ROD ASSY. (BATTERY MOUNTING.)	1	
24	6D000192	BATTERY PLATE ASSEMBLY	1	
25	20108	HEX NUT M8	1	
26	3058	PLAIN WASHER 15X8.4X1.5	1	
27	6D000188	BATTERY PROTECTION COVER	1	
28	CM309508	ELECTRONIC DEVICE-CNG	1	CNG
28	CM309507	ELECTRONIC DEVICE - LPG	1	LPG
29	604953	TENSION ROD	1	Not Servicable
30	568291	HALF TIE ROD	1	Not Servicable
31	016406	SPRING WASHER	2	
32	20106	HEX NUT M6	2	
33	B074905	MOBILE CHARGER	1	
34	B075693	MTG BKT ONE WAY FUSE - HOLDER	2	

88

Print Date: 07-Apr-2022

PLATE-38

ELECTRICAL DEVICES & BATTERY MOUNTING

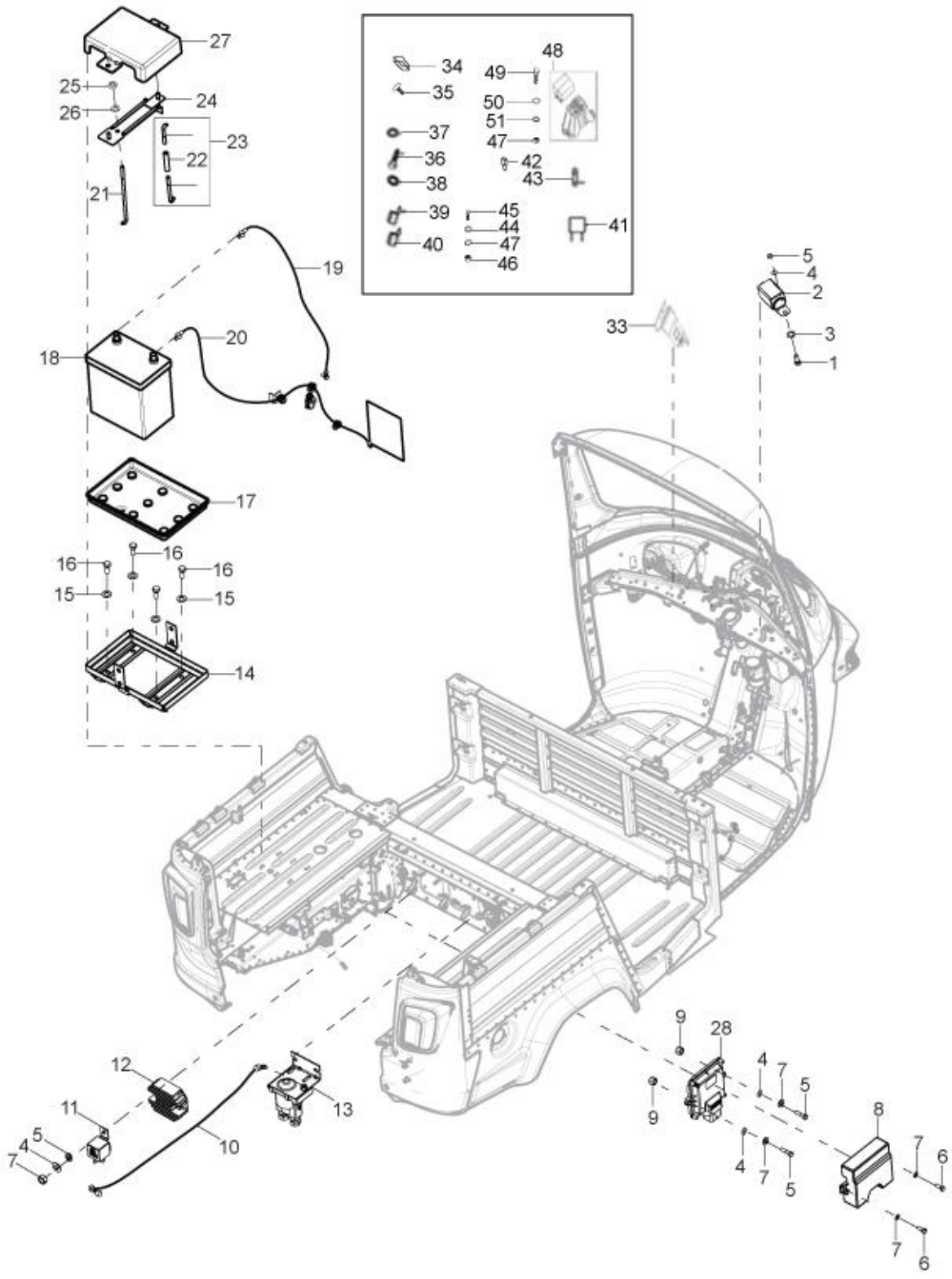
27
25
26
24
23
22
21
34
35
37
36
38
39
40
48
49
50
51
47
42
43
45
44
47
46
41
19
20
18
17
16
16
16
15
15
14
5
4
2
3
1
33
9
28
4
7
5
9
8
4
7
5
7
6
7
6
12
11
5
4
7
10
13

89

Print Date: 07-Apr-2022

PLATE-38

ELECTRICAL DEVICES & BATTERY MOUNTING

Fig. No.	Part No.	Description	Qty	Remarks
35	568692	PAN SELF TAP SCREW 6SG X 16AB	1	
36	31088	HEX HD SCREW M6 X 16 CL 8.8 (811061623)	1	
37	3056	PLAIN WASHER M6 OD12	1	
38	016406	SPRING WASHER	1	
39	680166	SAFETY STARTER RELAY	1	
40	B023727R	CONTACTOR	2	
41	567706	FUSE 30 A	1	
42	604557	FUSE (10A)	6	
43	925786	ECU - FUSE (2A) (N.I)	1	
44	12546	PLAIN WASHER / MULTI TOOTH LOCK WASHER M5	1	
45	31057	HEX HEAD SCREW M5 X 14 CL 8.8	1	
46	20105	PLAIN NUT M5	5	
47	3055	PLAIN WASHER M5	3	
48	567581	FOUR POLE FUSE BOX	1	
49	31058	HEX HEAD SCREW M5 X 16 CC8.8	24	
50	6078	PLAIN WASHER 12 X 5.2 X 1	2	
51	6965	SPRING WASHER DIA 5	4	
52	6D000480	5A MINIVAL FUSE BIEGE	7	NI
52	6D000479	10A MINIVAL FUSE RED	4	NI
53	6D000481	15A MINIVAL FUSE BLUE	2	NI
53	6D000478	20A MINIVAL FUSE YELLOW	1	NI
54	6D000482	30A MICRO RELAY	1	NI

90

Print Date: 07-Apr-2022

PLATE-39
LPG KIT

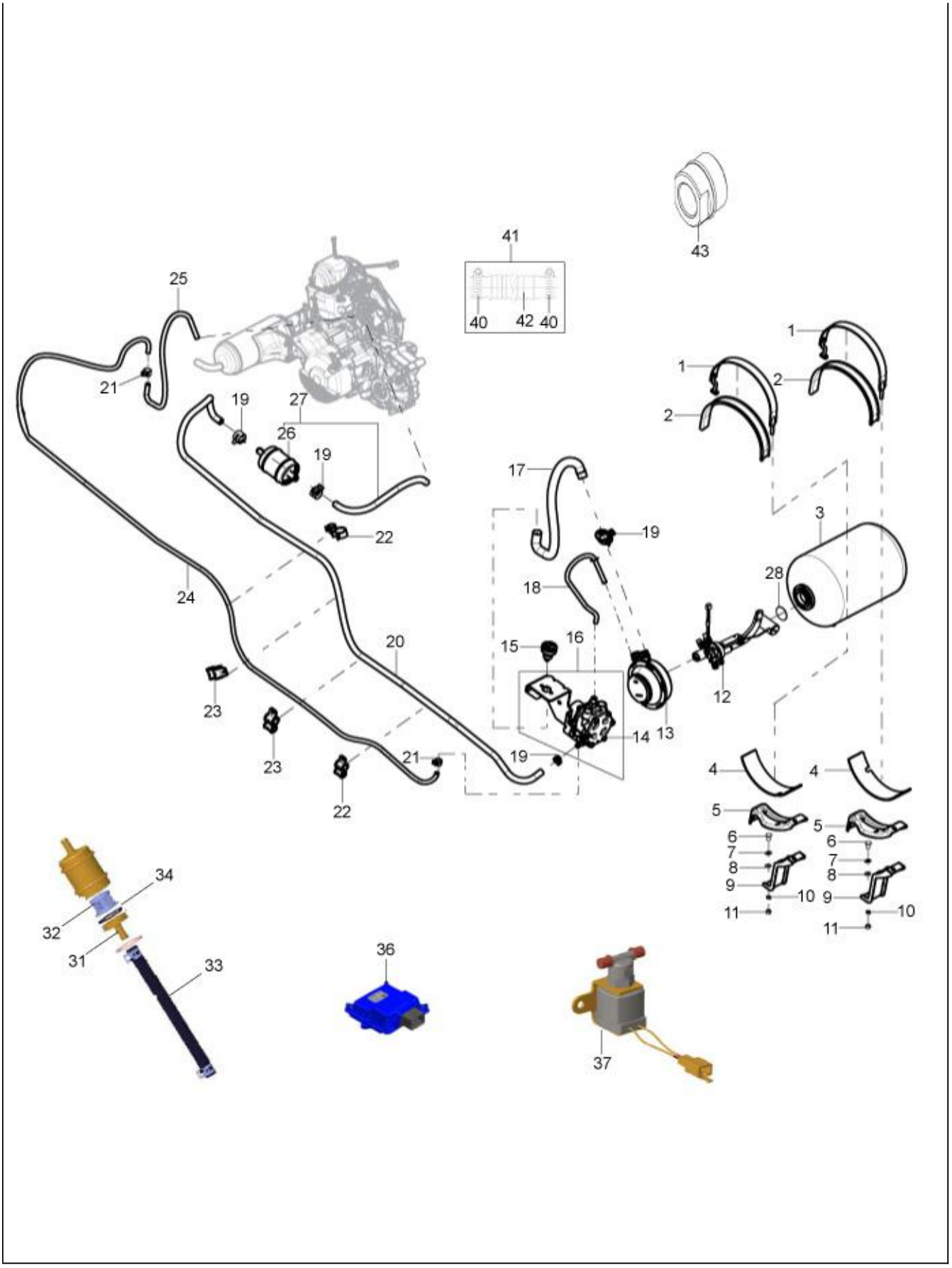
41
40
42
40
43
25
21
19
27
26
19
22
24
20
23
23
22
21
17
19
18
15
16
14
13
19
12
28
3
1
1
2
2
4
4
5
5
6
7
8
9
10
11
6
7
8
9
10
11
34
32
31
33
36
37

91

Print Date: 07-Apr-2022

PLATE-39
LPG KIT

Fig. No.	Part No.	Description	Qty	Remarks
1	6A000874	ASSY. STR. FOR CYL. MTG. (20.6/40.6 LTR)	2	
2	632184	RUBBER STRAP UPPER	2	
3	6A000124	LPG CYLINDER- 20.6 LTR	1	
4	B079362	RUBBER PAD BOTTOM	2	
5	B078342	CYL. MTG. BKT 40LTR	2	
6	31116	HEX HD. SCREW M8X16	2	
7	016408	SPRING WASHER	2	
8	3058	PLAIN WASHER 15X8.4X1.5	2	
9	6B000850	CYLINDER SUPPORT BRACKET ASSLY	2	
10	16410	SPRING WASHER	2	
11	20110	HEX NUT M10	2	
12	6A000158	MULTI FUNCTION VALVE, 20.6LTR LPG CYL.	1	
13	B073084	SEAL BOX	1	
13.A	6A000507	SEAL BOX TOP	1	Not Serviceable
13.B	6A000505	SEAL BOX BOTTOM	1	Not Serviceable
13.C	6A000506	SEAL BOX O RING	1	Not Serviceable
14	6A000520	LPG PRESSURE REGULATOR	1	
15	6A000509	LPG FILLER VALVE ASSLY.	1	
15.1	6A000512	FILLER CAP	1	
15.2	6A000738	RUBBER BUSHING	1	NI
16	6A000519	LPG PRESSURE REGULATOR ASSLY (WITH BRACKET)	1	
17	B041491	VENT HOSE ASSY - 1	1	
18	6A001165	LP HOSE (MFV TO HPR)	1	
19	6A000495	CLAMP FOR HOSE PR. REG. TO DAMPNER	2	
20	6A000522	HOSE PRESSURE REG. TO PULSATION DAMP LPG	1	
21	6A000491	CLAMP FOR VACCUME HOSE	2	
22	6A001003	SWIVEL CLAMP	3	
23	6A000486	CLAMP	4	
24	6A000489	VACCUME HOSE	1	
25	6A000748	LP HOSE (MFV TO FV)	1	
25.A	6A001057	CLAMP FOR 10MM ID HOSE	1	
26	6A000497	PULSATION DAMPNER WITH FILTER	1	
27	6A000740	PULSATION DAMPENER AND FILTER ASSLY.	1	
28	920013	WASHER SEALING	1	
29	6B001312	PLASTIC COVER ATTACHMENT LH	1	

92

Print Date: 07-Apr-2022

PLATE-39
LPG KIT

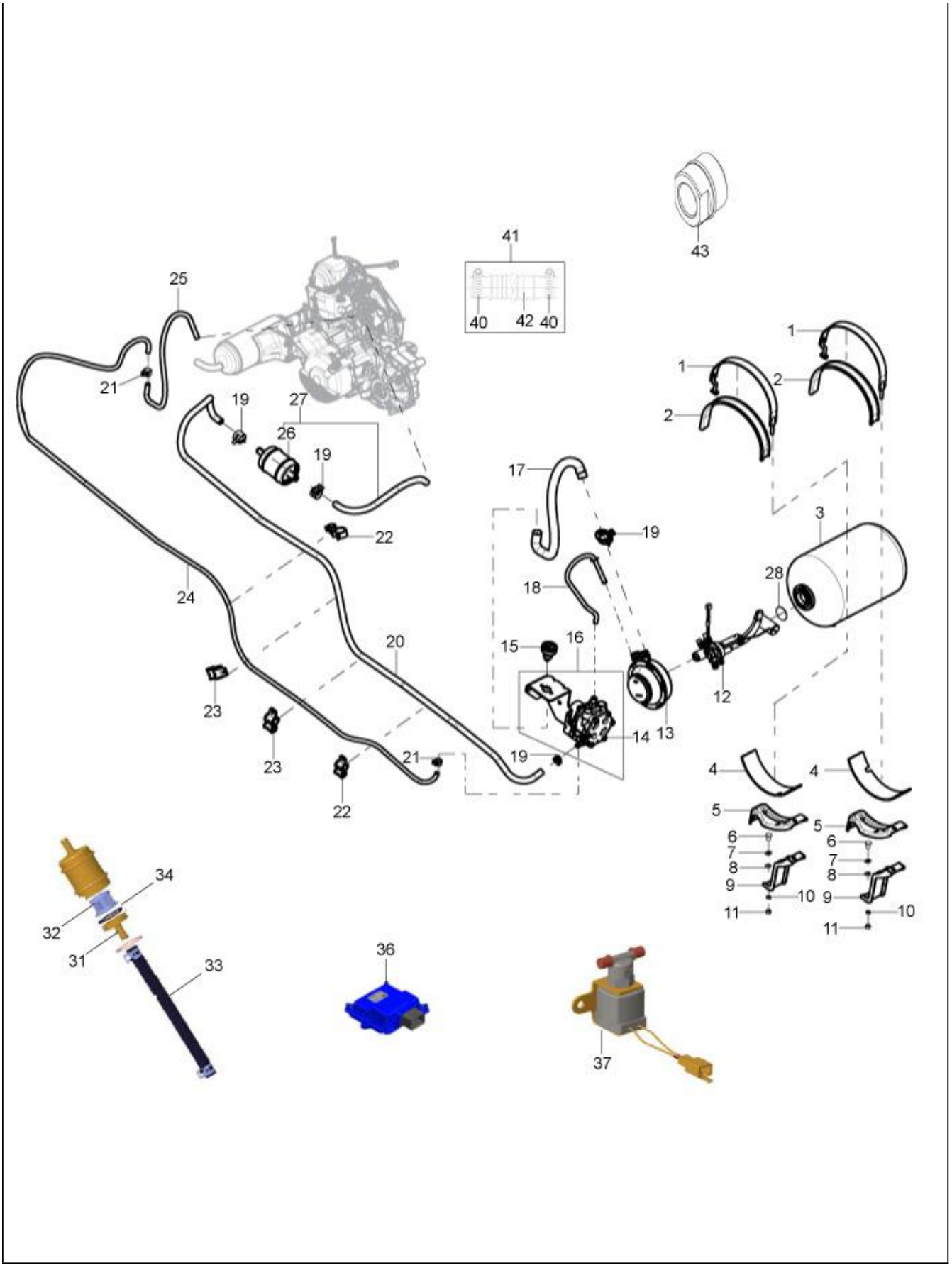
41
40
42
40
43
25
21
19
27
26
19
22
24
20
23
23
22
21
17
19
18
15
16
14
13
12
28
3
1
1
2
2
4
4
5
5
6
7
8
9
10
11
6
7
8
9
10
11
34
32
31
33
36
37

93

Print Date: 07-Apr-2022

PLATE-39
LPG KIT

Fig. No.	Part No.	Description	Qty	Remarks
30	6A001078	OUTLET NIPPLE, CNG REGULATOR	1	
31	6A001038	OUTLET PORT	1	
32	6A001039	FILTER CARTRIDGE	1	
33	6A000739	HOSE LPG/CNG (FLEXIBLE)	1	
34	6A001037	OUTLET CAP O-RING	11	
35	6A001004	TANK VALVE	1	
36	CM309502	ELECTRONIC DEVICE-CNG	1	
37	6A000500	PETROL SOLENOID WITH BKT.	1	
38	6A000738	RUBBER BUSHING	1	NI
39	6A000482	CNG HIGH PRESSURE TUBE ASSLY.	1	
40	6A000621	CLIP FOR CORRUGATED HOSE	2	
41	6A000900	AIR VENT HOSE	2	
42	6A001166	VENTILATION AND DUCT HOSE	1	
43	6A001150	TANK VALVE VENTILATION ADAPTER	1	

94

Print Date: 07-Apr-2022

PLATE-40

FRONT BRAKE ASSEMBLY SELF ADJUSTING (DIA 180 X 40 MM)

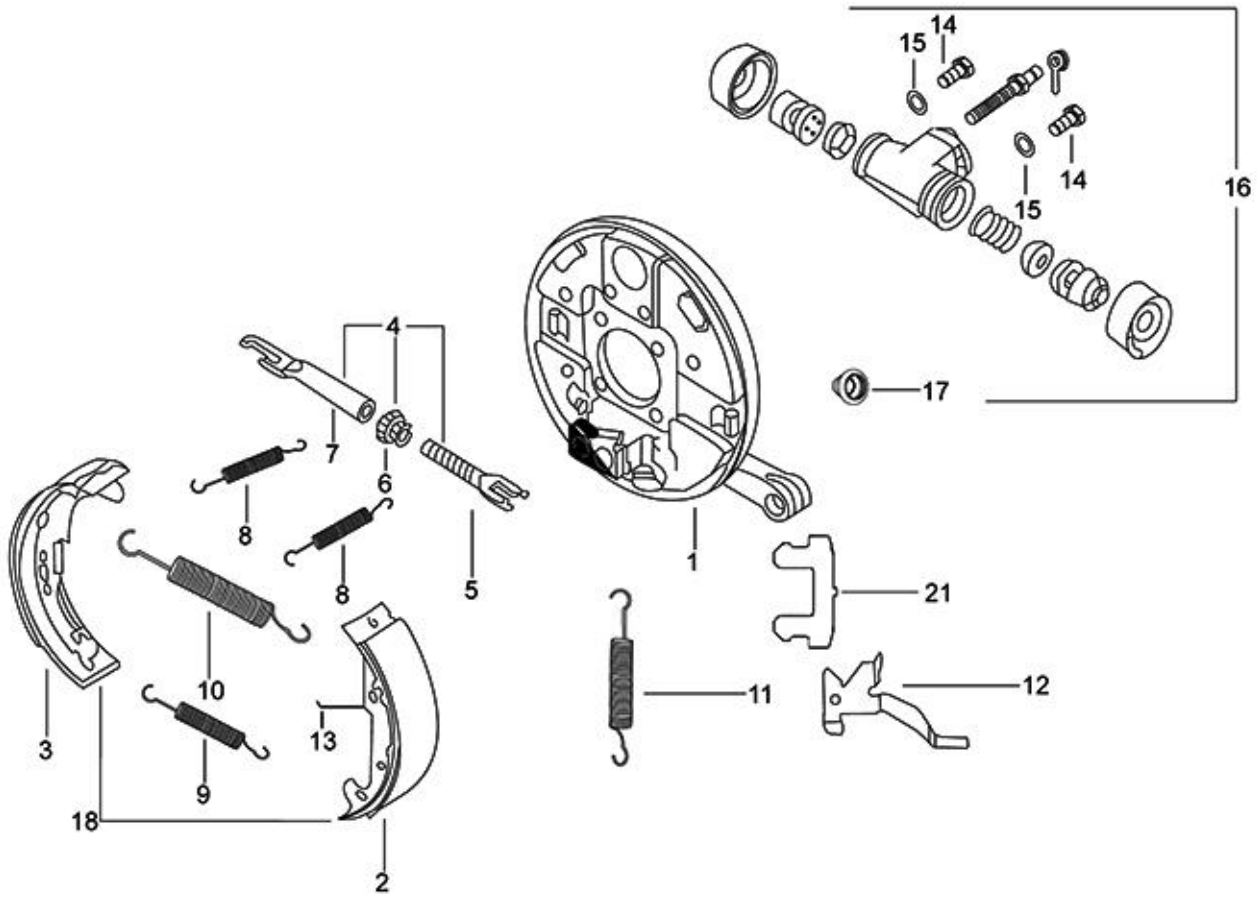
15
14
14
15
16
17
4
7
6
8
8
5
1
21
10
11
12
3
13
9
18
2

95

Print Date: 07-Apr-2022

PLATE-40

FRONT BRAKE ASSEMBLY SELF ADJUSTING (DIA 180 X 40 MM)

Fig. No.	Part No.	Description	Qty	Remarks
1	6C000275	BRACKET WHEEL CARRIER WITH PI	1	
2	B003784	LEADING SHOE COMP WITH PIN LH ANL 1643	1	
3	940004	FRONT BRAKE SHOE KIT COMPRISING OF 2 & 3	1	
4	179056	FORK ASSY LH	1	
5	178804	FORK FOR LH WHEEL	1	
6	178805	LH - GEAR	1	
7	178806	LH STRUT	1	
8	602497	JAWS STOP SPRINGS	2	
9	116088	SPRING SUPPORTING JAWS	1	
10	245038	SHOE RETURN SPRING	1	
11	178808	SPRING LEVER RETURN	1	
12	178807	LEVER LH	1	
13	178823	JUMPER LH	1	
13	178824	JUMPER	1	
14	63440	BOLT M6X12	2	
15	12536	SPRING WASHER	2	
16	587616	BRAKE CYLINDER FR ASSLY (DIA. 22.225)	1	
17	925501	CAP (KBX P 6450225)	1	
18	940004	FRONT BRAKE SHOE KIT COMPRISING OF 2 & 3	1	
19	925521	MINOR KIT WHEEL CYL. FRT (KBX 1007)	1	
20	6C000448	FRONT BRAKE ASSLY NON ASBESTOS BRAKE	1	NI -Under Development
21	6C000427	GROMMET FOR BRAKE INSPECTION HOLE	1	Under Development

96

Print Date: 07-Apr-2022

PLATE-41

REAR BRAKE ASSEMBLY SELF ADJUSTING (DIA 180 X 40 MM)

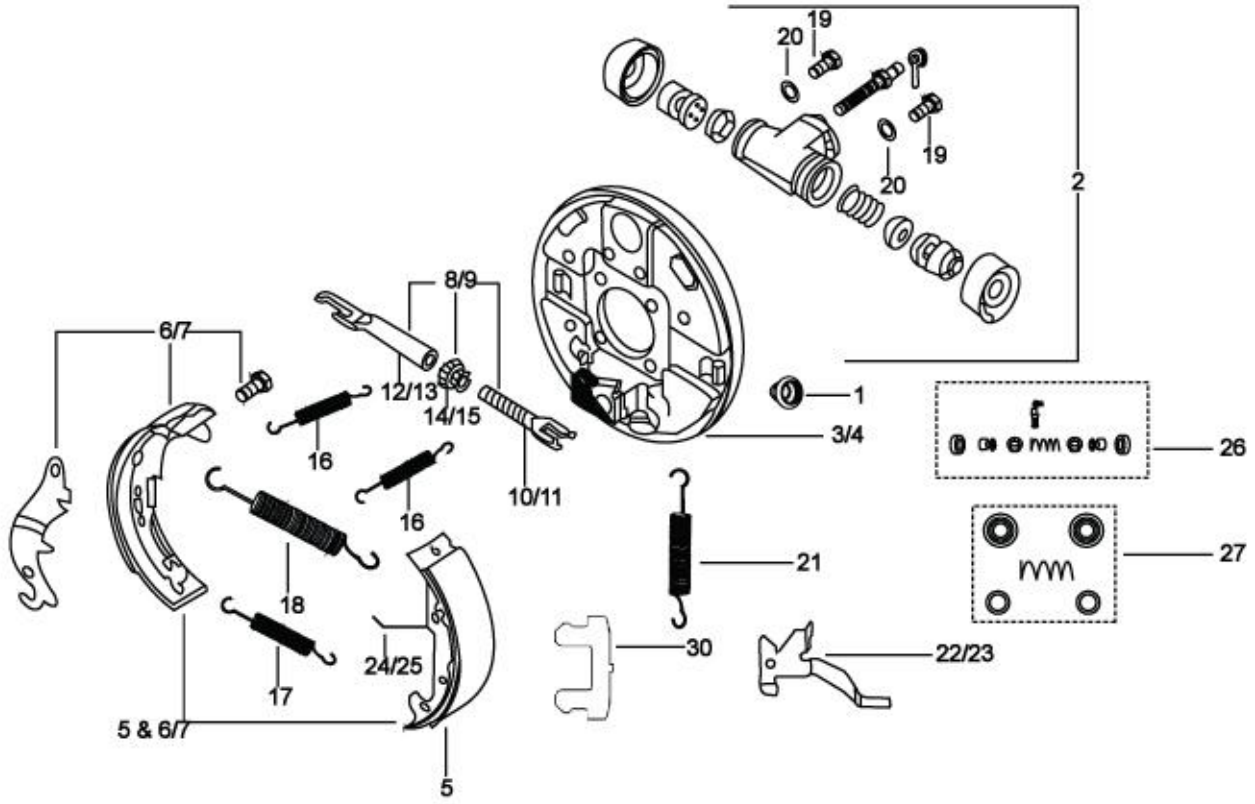
19
20
19
20
2
8/9
6/7
12/13
14/15
1
3/4
26
16
16
10/11
21
27
18
30
22/23
24/25
17
5 & 6/7
5

97

Print Date: 07-Apr-2022

PLATE-41

REAR BRAKE ASSEMBLY SELF ADJUSTING (DIA 180 X 40 MM)

Fig. No.	Part No.	Description	Qty	Remarks
1	925501	CAP (KBX P 6450225)	1	
2	632148	WHEEL CYLINDER ASSY. FRONT DIA. (25.4 MM)	1	
3	6C000277	JAWS-SUPPORTING DISK FOR LEFT WHEEL WITH	1	
4	6C000279	JAW-SUPPORT DISK FOR RIGHT WHEEL WITH AS	1	
5	B003784	LEADING SHOE COMP WITH PIN LH ANL 1643	1	
6	940005	REAR BRAKE SHOE SET L/H COMPRISING OF 5 & 7	1	
7	940006	REAR BRAKE SHOE SET R/H. COMPRISING OF 5 & 8	1	
8	179056	FORK ASSY LH	1	
9	179057	FORK ASSY. RH	1	
10	178804	FORK FOR LH WHEEL	1	
11	178818	RH FORK	1	
12	178806	LH STRUT	1	
13	178820	RH STRUT	1	
14	178805	LH - GEAR	1	
15	178819	RH GEAR	1	
16	602497	JAWS STOP SPRINGS	2	
17	116088	SPRING SUPPORTING JAWS	1	
18	245038	SHOE RETURN SPRING	1	
19	63440	BOLT M6X12	2	
20	12536	SPRING WASHER	2	
21	178808	SPRING LEVER RETURN	1	
22	178807	LEVER LH	1	
23	178821	LEVER RH	1	
24	178823	JUMPER LH	1	
25	178824	JUMPER	1	
26	925573	MAJOR KIT	1	
27	925574	MINOR KIT WHL CYL. RR	1	
28	940005	REAR BRAKE SHOE SET L/H COMPRISING OF 5 & 7	1	
29	940006	REAR BRAKE SHOE SET R/H. COMPRISING OF 5 & 8	1	
30	6C000427	GROMMET FOR BRAKE INSPECTION HOLE	1	Under Development

98

Print Date: 07-Apr-2022

PLATE-42

CNG Kit 40 Ltrs._front (cabin) side regulator Mtg.

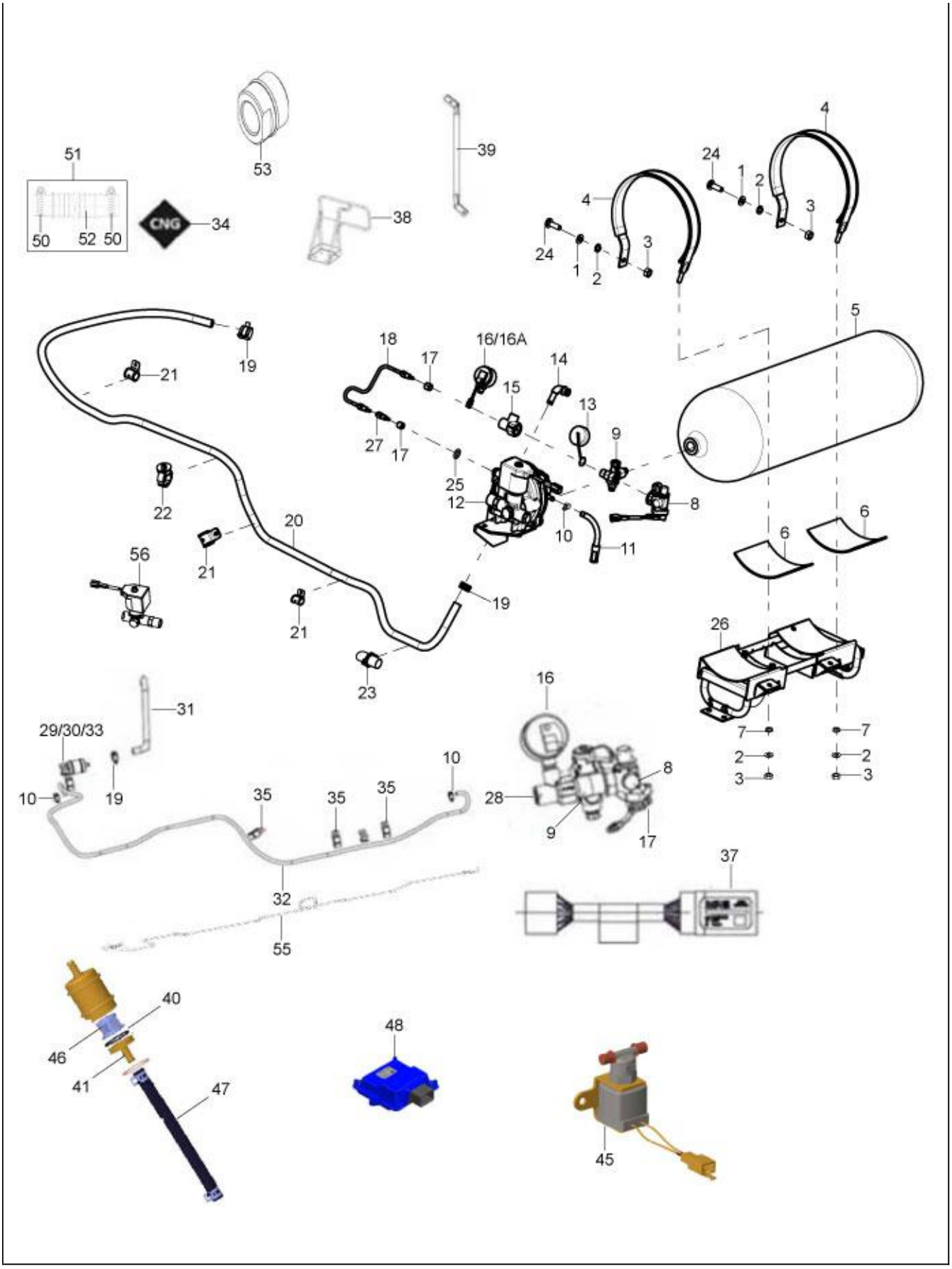
51
50
52
50
CNG
34
53
38
39
4
24
1
2
3
5
18
17
16/16A
14
15
13
9
27
25
12
8
10
11
6
19
21
22
20
56
23
26
7
2
3
16
31
29/30/33
28
35
32
55
37
40
46
41
47
48
45

99

Print Date: 07-Apr-2022

PLATE-42

CNG Kit 40 Ltrs._front (cabin) side regulator Mtg.

Fig. No.	Part No.	Description	Qty	Remarks
1	286328	PLAIN WASHER 20X10.2X2	4	
2	16410	SPRING WASHER	4	
3	20110	HEX NUT M10	4	
4	6A000918	ASSY STRAP	2	
5	B024654R	CNG CYLENDER (40LTR)	1	
6	604856	RUBBER STRAP LOWER	2	
7	286328	PLAIN WASHER 20X10.2X2	4	
8	6A000601	NZS ASSY	1	
9	6A001004	TANK VALVE	1	
10	6A000491	CLAMP FOR VACCUME HOSE	2	
11	6A001041	VACUUM CAP	1	Not Servicable
12	6A000488	CNG PRESSURE REGULATOR	1	
13	6A001113	PRESSURE GAUGE PROTECTION CAP	1	
14	6A001078	OUTLET NIPPLE, CNG REGULATOR	1	
15	6A001020	TEE CONNECTOR M12 X 1, ASSEMBLY	1	
16	6A000752	CNG PRESSURE GAUGE WITH LEVEL SENSOR	1	
17	6A000485	FERRULE	2	
18	6A001042	PIPE ASM FILLING VALVE TO HP REGULATOR	1	
19	6A000495	CLAMP FOR HOSE PR. REG. TO DAMPNER	2	
20	6A000494	CNG LOW PRESSURE HOSE-PR. REG.TO DAMPNER	1	
21	6A000486	CLAMP	3	
22	B076007	PIPE CLIP 1 WAY	1	
23	6A000944	SPIGOT	1	
24	D9166140616	BOLT, W/WASHER	2	
25	660168	PAN SELF TP. SCREW 10 SGX13AB	1	
26	6A000874	ASSY. STR. FOR CYL. MTG. (20.6/40.6 LTR)	1	
27	6A000484	FERRULE NUT M12X1	2	
28	6A001020	TEE CONNECTOR M12 X 1, ASSEMBLY	1	
29	6A000523	PULSATION DAMPENER AND FILTER ASSLY.	1	
30	6A000497	PULSATION DAMPNER WITH FILTER	1	
31	6A000498	HOSE PULSATION DAMPNER TO INJECTOR	1	
32	6A000489	VACCUME HOSE	1	
33	6A001039	FILTER CARTRIDGE	1	
34	6A000597	CNG STICKER	2	
35	6A001003	SWIVEL CLAMP	3	

100

Print Date: 07-Apr-2022

PLATE-42

CNG Kit 40 Ltrs._front (cabin) side regulator Mtg.

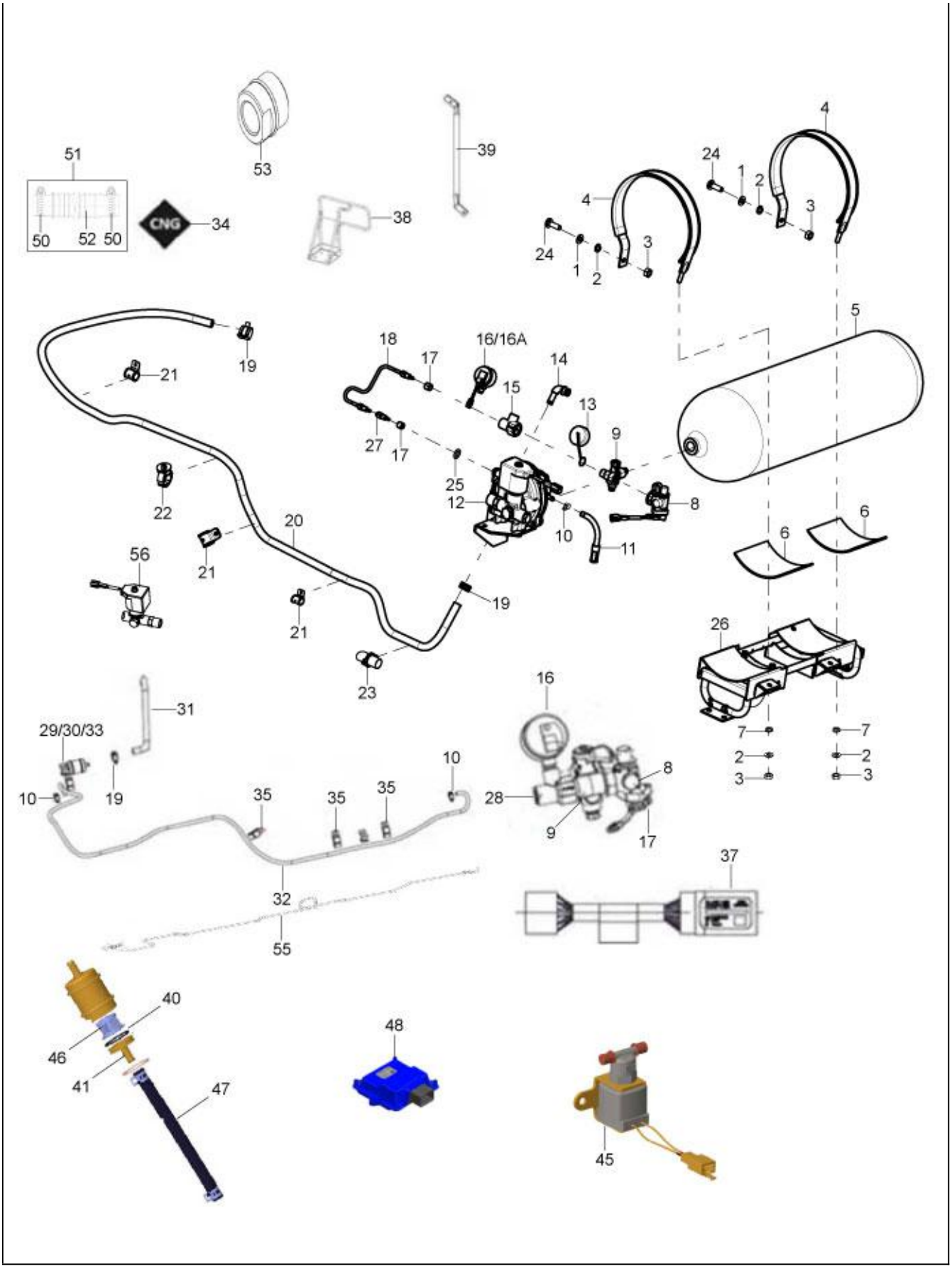
51
50
52
50
CNG
34
53
38
39
4
24
1
2
3
5
18
17
16/16A
14
15
13
9
27
25
12
8
10
11
6
19
21
22
20
56
23
26
7
2
3
31
29/30/33
16
28
35
32
55
37
40
46
41
47
48
45

101

Print Date: 07-Apr-2022

PLATE-42

CNG Kit 40 Ltrs._front (cabin) side regulator Mtg.

Fig. No.	Part No.	Description	Qty	Remarks
36	6D000544	SWITCH, MICRO	1	
37	6D000298	CLUSTER ADAPTOR	1	
38	6A000957	CNG PROTECTION BRACKET ASSEMBLY	1	
39	6A000959	SUPPORT PIPE, CNG PROTECTION GUARD	1	
40	6A001037	OUTLET CAP O-RING	1	
41	6A001038	OUTLET PORT	1	
42	6A000482	CNG HIGH PRESSURE TUBE ASSLY.	1	NI
43	CM309502	ELECTRONIC DEVICE-CNG	1	NI
44	6A001078	OUTLET NIPPLE, CNG REGULATOR	1	
45	6A000500	PETROL SOLENOID WITH BKT.	1	
46	6A001039	FILTER CARTRIDGE	1	
47	6A000739	HOSE LPG/CNG (FLEXIBLE)	1	
48	CM309502	ELECTRONIC DEVICE-CNG	1	
49	6A001004	TANK VALVE	1	
50	6A000621	CLIP FOR CORRUGATED HOSE	2	
51	6A000900	AIR VENT HOSE	2	
52	6A001166	VENTILATION AND DUCT HOSE	1	
53	6A001150	TANK VALVE VENTILATION ADAPTER	1	
54	6A000738	RUBBER BUSHING	1	NI
55	6A001185	HIGH PRESSURE TUBE ASSLY	1	
56	6D000755	CNG, HIGH PRESSURE SOLENOID VALVE	1	

102

Print Date: 07-Apr-2022

PLATE-43

CNG KIT 40 Ltrs._for Rear side regulator Mounting (long member)

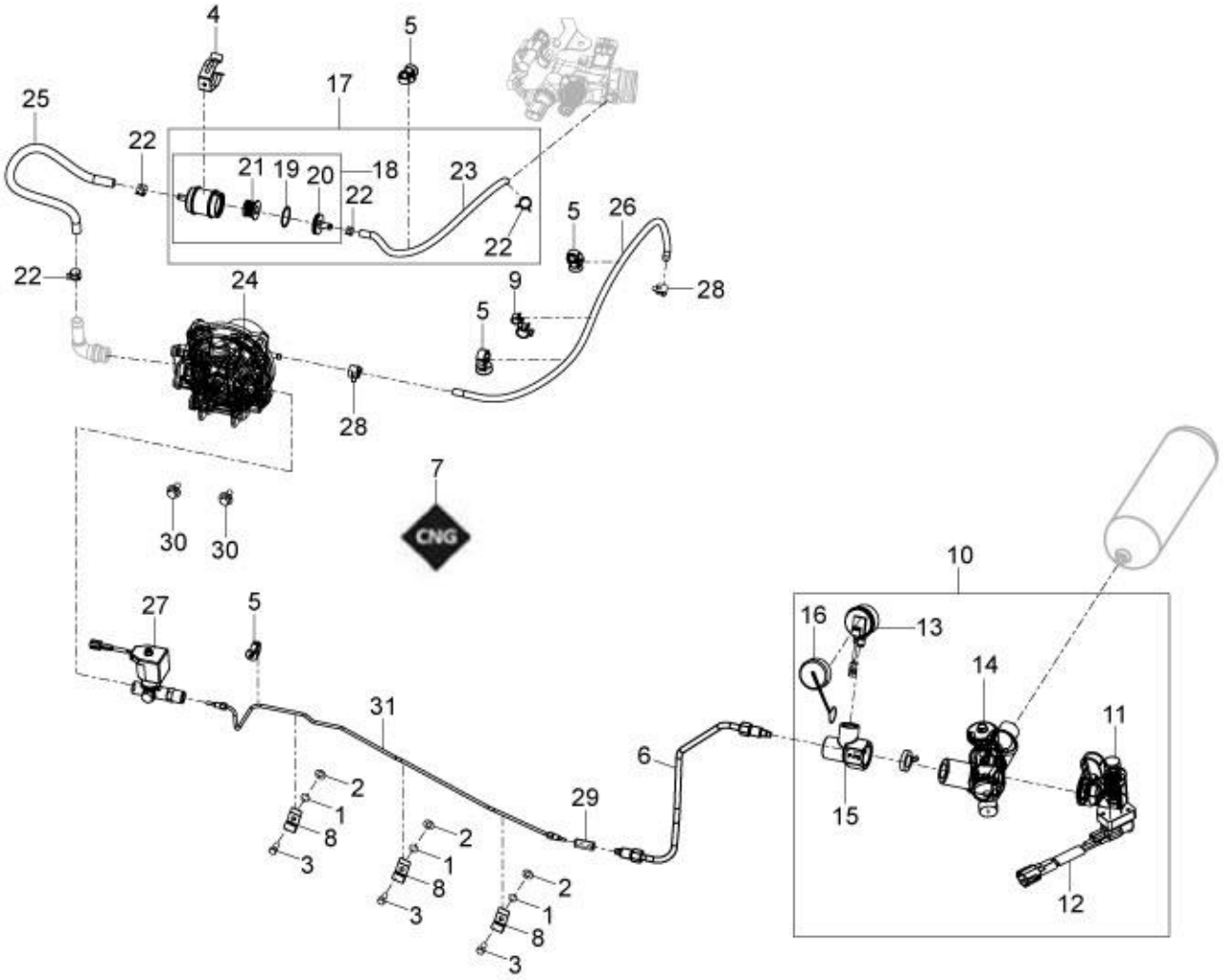
4
5
17
25
22
21
19
20
18
23
22
22
5
26
22
24
9
28
5
28
7
CNG
30
30
10
27
5
16
13
14
31
11
6
2
1
8
3
29
15
2
1
8
3
2
1
8
3
12

103

Print Date: 07-Apr-2022

PLATE-43

CNG KIT 40 Ltrs._for Rear side regulator Mounting (long member)

Fig. No.	Part No.	Description	Qty	Remarks
1	16405	SPRING WASHER M5	3	
2	3055	PLAIN WASHER M5	3	
3	31054	HEX HD. SCREW M5X10 CL8.8	3	
4	6A000836	SNAP FIT BKT., FILTER MTG (ARAYMOND)	1	
5	B076007	PIPE CLIP 1 WAY	4	
6	6A001547	HP TUBE, VALVE TO UNION, 230CC	1	
7	6A000597	CNG STICKER	2	
8	6A000904	CLAMP FOR METAL PIPE	3	
9	6A001003	SWIVEL CLAMP	1	
10	6A001075	CNG PRS. GAUGE WITH LEVEL SENSOR & COVER	1	
11	6A000601	NZS ASSY	1	
12	6D000544	SWITCH, MICRO	1	
13	6A000752	CNG PRESSURE GAUGE WITH LEVEL SENSOR	1	
14	6A001004	TANK VALVE	1	
15	6A001020	TEE CONNECTOR M12 X 1, ASSEMBLY	1	
16	6A001113	PRESSURE GAUGE PROTECTION CAP	1	
17	6A001235	PULASATION DAMPNER AND FILTER	1	
18	6A000497	PULSATION DAMPNER WITH FILTER	1	
19	6A001037	OUTLET CAP O-RING	1	
20	6A001038	OUTLET PORT	1	
21	6A001039	FILTER CARTRIDGE	1	
22	6A000495	CLAMP FOR HOSE PR. REG. TO DAMPNER	2	
23	6A001233	HOSE, FILTER TO GAS IN PORT	1	
24	6A000488	CNG PRESSURE REGULATOR	1	
25	6A001357	LP HOSE-CNG	1	
26	6A001358	VACCUM HOSE	1	
27	6D000755	CNG, HIGH PRESSURE SOLENOID VALVE	1	
28	6A000491	CLAMP FOR VACCUME HOSE	2	
29	6A001545	UNION, HP TUBE	1	
30	D9166140616	BOLT, W/WASHER	3	
31	6A001543	HP TUBE, CONNECTOR TO REG.,D3S	1	

104

Print Date: 07-Apr-2022

PLATE-44

CNG Cylinder Mtg. for 40 Ltrs._ Rear side regulator Mounting(long member)

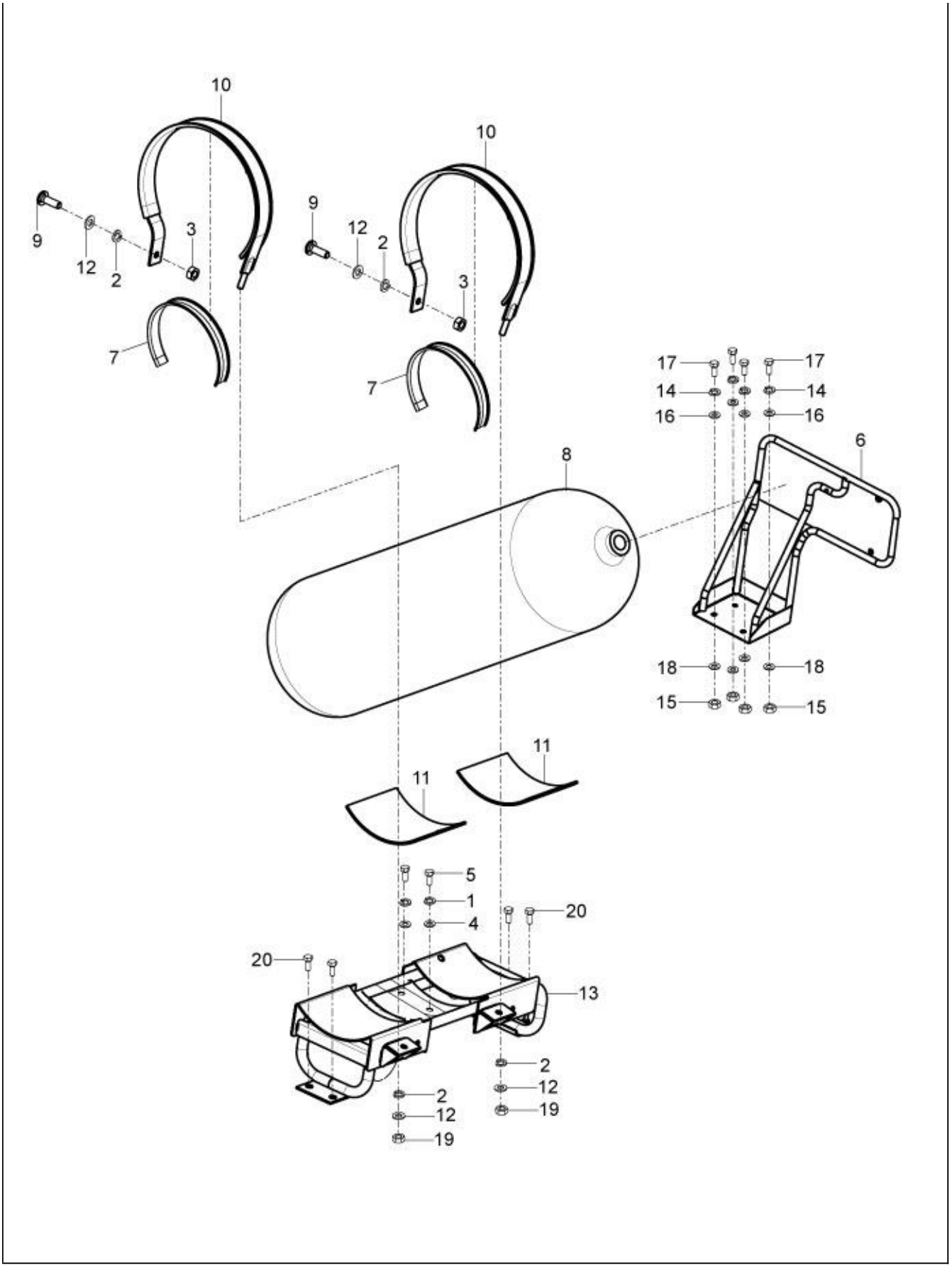
10
10
9
12
2
3
9
12
2
3
7
7
17
17
14
14
16
16
6
8
18
18
15
15
11
11
5
1
4
20
20
13
2
12
19
2
12
19

105

Print Date: 07-Apr-2022

PLATE-44

CNG Cylinder Mtg. for 40 Ltrs._ Rear side regulator Mounting(long member)

Fig. No.	Part No.	Description	Qty	Remarks
1	16408	SPRING WASHER M8	2	
2	16410	SPRING WASHER	4	
3	20110	HEX NUT M10	2	
4	3058	PLAIN WASHER 15X8.4X1.5	2	
5	31118	SCREW M8X20	2	
6	6A001256	CNG VALVE PROTECTION BKT. ASSLY	1	
7	659857	RUBBER STRAP UPPER	2	
8	B024654R	CNG CYLENDER (40LTR)	1	
9	632247	HEX HDD SCREW M10X30 CC8.8	2	
10	6A000918	ASSY STRAP	2	
11	6A001476	RUBBER PAD BOTTOM	2	
12	286328	PLAIN WASHER 20X10.2X2	4	
13	6A000874	ASSY. STR. FOR CYL. MTG. (20.6/40.6 LTR)	1	
14	16408	SPRING WASHER M8	4	
15	20108	HEX NUT M8	4	
16	3058	PLAIN WASHER 15X8.4X1.5	4	
17	31092	HEX. HD SCREW M6X25	4	
18	660032	PLAIN WASHER 6.2 X 18 X 2 (SS)	4	
19	20106	HEX NUT M6	2	
20	31088	HEX HD SCREW M6 X 16 CL 8.8 (811061623)	4	

106

Print Date: 07-Apr-2022

PARTS INDEX

ape Auto DX 230 CC CNG LPG BS-VI

107

Print Date: 07-Apr-2022

PART NO	BLOCK	PART NO	BLOCK	PART NO	BLOCK
000267	PLATE-10	109066	PLATE-31	14628	PLATE-23
002139	PLATE-12	109265	PLATE-31	150041R	PLATE-30
006410	PLATE-13	109404	PLATE-27	150579	PLATE-31
006410	PLATE-14	109775	PLATE-27	150915R	PLATE-30
006450	PLATE-14	109892	PLATE-32	151924	PLATE-21
009101	PLATE-12	111353	PLATE-2	151924	PLATE-31
013880	PLATE-18	111356	PLATE-33	152580	PLATE-31
013880	PLATE-19	111498	PLATE-33	152580	PLATE-32
013880	PLATE-24	112867R	PLATE-33	15335	PLATE-22
016406	PLATE-15	112898	PLATE-2	15335	PLATE-32
016406	PLATE-18	113278	PLATE-33	15594	PLATE-32
016406	PLATE-24	116088	PLATE-41	157103	PLATE-32
016406	PLATE-30	116088	PLATE-32	15727	PLATE-29
016406	PLATE-38	116088	PLATE-40	15727	PLATE-30
016406	PLATE-38	116103	PLATE-24	15911	PLATE-23
016408	PLATE-15	116831	PLATE-32	16319	PLATE-27
016408	PLATE-18	117401	PLATE-2	16405	PLATE-43
016408	PLATE-18	117402	PLATE-2	16405	PLATE-25
016408	PLATE-20	12138	PLATE-27	16405	PLATE-30
016408	PLATE-22	122032014	PLATE-12	16405	PLATE-38
016408	PLATE-22	125181	PLATE-27	16406	PLATE-27
016408	PLATE-23	125289	PLATE-31	16406	PLATE-27
016408	PLATE-24	12536	PLATE-41	16406	PLATE-28
016408	PLATE-30	12536	PLATE-32	16406	PLATE-28
016408	PLATE-32	12536	PLATE-40	16406	PLATE-33
016408	PLATE-36	12540	PLATE-23	16408	PLATE-44
016408	PLATE-39	12546	PLATE-30	16408	PLATE-44
018639	PLATE-7	12546	PLATE-38	16410	PLATE-42
018639	PLATE-11	12546	PLATE-38	16410	PLATE-44
018639	PLATE-13	127016015	PLATE-2	16410	PLATE-22
018639	PLATE-16	127111011	PLATE-14	16410	PLATE-31
018639	PLATE-19	12778	PLATE-20	16410	PLATE-31
107718	PLATE-31	127927R	PLATE-35	16410	PLATE-32
107732	PLATE-31	128633	PLATE-32	16410	PLATE-32
107827	PLATE-32	132129	PLATE-14	16410	PLATE-39
107870	PLATE-31	132134	PLATE-14	165121014	PLATE-2
107870	PLATE-32	136434	PLATE-31	165155R	PLATE-14
107871	PLATE-31	136451R	PLATE-32	16603	PLATE-20
108785	PLATE-36	137026	PLATE-32	16603	PLATE-24
108873	PLATE-31	137235	PLATE-31	16620	PLATE-27
108874	PLATE-31	13861	PLATE-23	16626	PLATE-27
109012	PLATE-23	142424	PLATE-24	16626	PLATE-27
109064	PLATE-31	142425	PLATE-24	16670	PLATE-26

108

Print Date: 07-Apr-2022

PART NO	BLOCK	PART NO	BLOCK	PART NO	BLOCK
16670	PLATE-26	1A004224	PLATE-17	1A009588	PLATE-9
17702	PLATE-20	1A004225	PLATE-17	1A009589	PLATE-9
178804	PLATE-41	1A004807	PLATE-14	1A009590	PLATE-9
178804	PLATE-40	1A005176	PLATE-14	1A009591	PLATE-9
178805	PLATE-41	1A005178	PLATE-12	1A009592	PLATE-9
178805	PLATE-40	1A006115	PLATE-12	1A009593	PLATE-9
178806	PLATE-41	1A006545	PLATE-7	1A009606	PLATE-16
178806	PLATE-40	1A006701	PLATE-12	1A009621R	PLATE-4
178807	PLATE-41	1A006740	PLATE-11	1A009702	PLATE-16
178807	PLATE-40	1A006742	PLATE-11	1A009762	PLATE-8
178808	PLATE-41	1A006812	PLATE-8	1A010001	PLATE-11
178808	PLATE-40	1A006856	PLATE-2	1A010016	PLATE-12
178818	PLATE-41	1A006858	PLATE-9	1A010035	PLATE-12
178819	PLATE-41	1A006877	PLATE-8	1A010109	PLATE-16
178820	PLATE-41	1A006899	PLATE-6	1A010166	PLATE-12
178821	PLATE-41	1A006901	PLATE-6	1A010172	PLATE-16
178823	PLATE-41	1A006970	PLATE-12	1A010185	PLATE-16
178823	PLATE-40	1A006988	PLATE-10	1A010208	PLATE-13
178824	PLATE-41	1A007026	PLATE-2	1A010461	PLATE-13
178824	PLATE-40	1A007028	PLATE-2	1A010540	PLATE-13
179056	PLATE-41	1A007029	PLATE-12	1A010561	PLATE-13
179056	PLATE-40	1A007047	PLATE-8	1A010632	PLATE-14
179057	PLATE-41	1A007051	PLATE-14	1A010720	PLATE-2
180431	PLATE-31	1A007152	PLATE-37	1A011066	PLATE-3
181746	PLATE-30	1A007501	PLATE-13	1A011217	PLATE-2
181747	PLATE-30	1A007501	PLATE-14	1A011246	PLATE-2
196302	PLATE-32	1A007565	PLATE-6	1A011286	PLATE-12
197071	PLATE-34	1A007605	PLATE-14	1A011287	PLATE-12
1A000024	PLATE-11	1A007663R	PLATE-2	1A011288	PLATE-12
1A000542	PLATE-17	1A007664R	PLATE-2	1A011289	PLATE-12
1A000612	PLATE-2	1A007774	PLATE-2	1A011337	PLATE-14
1A000612	PLATE-14	1A008397	PLATE-6	1A011338	PLATE-14
1A000708	PLATE-9	1A008547	PLATE-14	1A011345	PLATE-14
1A000708	PLATE-13	1A008559	PLATE-2	1A011407	PLATE-19
1A000831	PLATE-11	1A008804	PLATE-14	1A011438	PLATE-16
1A001073	PLATE-10	1A008804	PLATE-34	1A011461	PLATE-13
1A001073	PLATE-12	1A008823	PLATE-2	1A011500	PLATE-8
1A002358	PLATE-6	1A009093	PLATE-14	1A011524	PLATE-16
1A002685	PLATE-2	1A009270	PLATE-11	1A011778	PLATE-14
1A002691	PLATE-11	1A009302	PLATE-10	1A011940	PLATE-13
1A004221	PLATE-17	1A009527	PLATE-16	1A012181	PLATE-12
1A004222	PLATE-17	1A009586	PLATE-9	1A012182	PLATE-12
1A004223	PLATE-17	1A009587	PLATE-9	1A012334	PLATE-12

109

Print Date: 07-Apr-2022

PART NO	BLOCK	PART NO	BLOCK	PART NO	BLOCK
1A012373	PLATE-13	1D000671R	PLATE-38	226661	PLATE-32
1A012374	PLATE-13	1D001138	PLATE-8	226662	PLATE-32
1A012376	PLATE-13	1D001846	PLATE-10	229524	PLATE-35
1A012702	PLATE-13	1D001894	PLATE-7	229524	PLATE-36
1A012845	PLATE-13	1D001894	PLATE-19	231370	PLATE-22
1A012846	PLATE-12	1D002080	PLATE-10	231370	PLATE-32
1A012925	PLATE-5	1E002514	PLATE-34	231370	PLATE-32
1A013013	PLATE-6	1E002771	PLATE-27	231370	PLATE-32
1A013046	PLATE-12	1E002772	PLATE-27	231370	PLATE-32
1A013159	PLATE-10	20105	PLATE-30	231370	PLATE-33
1A013629	PLATE-13	20105	PLATE-37	237246	PLATE-32
1A013915	PLATE-13	20105	PLATE-38	2383	PLATE-15
1A014335	PLATE-18	20105	PLATE-38	2383	PLATE-18
1A014508	PLATE-17	20106	PLATE-44	2383	PLATE-18
1A015287	PLATE-19	20106	PLATE-15	2383	PLATE-20
1A015321	PLATE-17	20106	PLATE-18	2383	PLATE-22
1A015505	PLATE-13	20106	PLATE-20	2383	PLATE-22
1A015692	PLATE-6	20106	PLATE-24	2383	PLATE-22
1A015812	PLATE-16	20106	PLATE-28	2383	PLATE-23
1A016737	PLATE-8	20106	PLATE-28	243303R	PLATE-32
1A016964	PLATE-14	20106	PLATE-28	245038	PLATE-41
1A016964	PLATE-2	20106	PLATE-30	245038	PLATE-40
1A017112	PLATE-12	20106	PLATE-34	261323	PLATE-23
1A017410	PLATE-18	20106	PLATE-38	265091	PLATE-22
1A017558	PLATE-19	20108	PLATE-44	265091	PLATE-22
1A017559	PLATE-19	20108	PLATE-15	267065	PLATE-32
1A017560	PLATE-19	20108	PLATE-20	267068	PLATE-32
1A017576	PLATE-15	20108	PLATE-22	267068	PLATE-32
1A017578	PLATE-15	20108	PLATE-22	269755	PLATE-2
1A017605	PLATE-4	20108	PLATE-23	269755	PLATE-6
1A018038	PLATE-9	20108	PLATE-24	272178	PLATE-22
1A018212	PLATE-9	20108	PLATE-36	285536	PLATE-8
1A018642R	PLATE-9	20108	PLATE-38	286328	PLATE-42
1A019375	PLATE-13	20110	PLATE-42	286328	PLATE-42
1A019388	PLATE-13	20110	PLATE-44	286328	PLATE-44
1A019389	PLATE-13	20110	PLATE-22	286328	PLATE-22
1A019390	PLATE-13	20110	PLATE-31	286328	PLATE-22
1A019391	PLATE-13	20110	PLATE-32	286328	PLATE-32
1A019392	PLATE-13	20110	PLATE-39	286328	PLATE-32
1A019393	PLATE-13	20359	PLATE-32	288730	PLATE-14
1A019394	PLATE-13	21118	PLATE-12	30072	PLATE-20
1A020456	PLATE-9	220575	PLATE-14	30072	PLATE-23
1A021204	PLATE-9	226596	PLATE-32	30074	PLATE-18

110

Print Date: 07-Apr-2022

PART NO	BLOCK	PART NO	BLOCK	PART NO	BLOCK
30074	PLATE-23	31089	PLATE-24	567719	PLATE-34
30209R	PLATE-31	31089	PLATE-27	567746G1	PLATE-36
3054	PLATE-26	31089	PLATE-27	567898	PLATE-36
3054	PLATE-29	31092	PLATE-44	567899	PLATE-36
3055	PLATE-43	31092	PLATE-33	567920	PLATE-26
3055	PLATE-26	31116	PLATE-24	567920	PLATE-35
3055	PLATE-30	31116	PLATE-30	567920	PLATE-36
3055	PLATE-30	31116	PLATE-39	567920	PLATE-36
3055	PLATE-38	31118	PLATE-44	567990	PLATE-31
3055	PLATE-38	31119	PLATE-23	567991	PLATE-31
3056	PLATE-20	31119	PLATE-32	567992	PLATE-31
3056	PLATE-24	31122	PLATE-35	567993	PLATE-31
3056	PLATE-28	31154	PLATE-22	568095	PLATE-31
3056	PLATE-28	31159	PLATE-32	568096	PLATE-24
3056	PLATE-30	432142	PLATE-2	568162	PLATE-35
3056	PLATE-33	434541	PLATE-16	568289	PLATE-32
3056	PLATE-38	434541	PLATE-6	568291	PLATE-38
3056	PLATE-38	434716	PLATE-5	568689	PLATE-22
3057	PLATE-20	435571	PLATE-4	568692	PLATE-38
3058	PLATE-44	436947	PLATE-18	568737	PLATE-35
3058	PLATE-44	478261	PLATE-13	568737	PLATE-36
3058	PLATE-23	479986	PLATE-8	569096	PLATE-23
3058	PLATE-23	482335	PLATE-4	569150	PLATE-31
3058	PLATE-24	483711	PLATE-5	569160	PLATE-37
3058	PLATE-30	485655	PLATE-2	569165	PLATE-28
3058	PLATE-35	485703	PLATE-2	569166	PLATE-28
3058	PLATE-38	485703	PLATE-6	569177	PLATE-28
3058	PLATE-39	485868	PLATE-6	569178	PLATE-28
3068	PLATE-32	566545	PLATE-31	569241	PLATE-22
31054	PLATE-43	567454	PLATE-21	569241	PLATE-22
31056	PLATE-25	567455	PLATE-21	569244	PLATE-22
31057	PLATE-30	567456	PLATE-21	569244	PLATE-22
31057	PLATE-38	567457	PLATE-21	569246R	PLATE-31
31057	PLATE-38	567458	PLATE-21	569255	PLATE-31
31058	PLATE-37	567459	PLATE-21	569375	PLATE-22
31058	PLATE-38	567461	PLATE-35	569377	PLATE-22
31088	PLATE-44	567461	PLATE-36	58273R	PLATE-6
31088	PLATE-20	567473	PLATE-31	587616	PLATE-40
31088	PLATE-24	567498R	PLATE-29	587617	PLATE-32
31088	PLATE-38	567581	PLATE-38	587624R	PLATE-35
31088	PLATE-38	567593	PLATE-30	587671R	PLATE-38
31089	PLATE-18	567700	PLATE-30	587829	PLATE-35
31089	PLATE-20	567706	PLATE-38	587902	PLATE-27

111

Print Date: 07-Apr-2022

PART NO	BLOCK	PART NO	BLOCK	PART NO	BLOCK
587904	PLATE-27	6173	PLATE-36	660168	PLATE-42
587907	PLATE-23	632109	PLATE-25	660168	PLATE-23
587928	PLATE-35	632148	PLATE-32	660168	PLATE-26
587928	PLATE-36	632148	PLATE-41	660168	PLATE-30
587963	PLATE-23	632158	PLATE-27	660207ED	PLATE-23
587971	PLATE-21	632158	PLATE-27	661231	PLATE-31
587971	PLATE-31	632184	PLATE-39	661266	PLATE-32
5969	PLATE-29	632247	PLATE-44	661267	PLATE-32
5969	PLATE-36	632292	PLATE-28	661282	PLATE-32
6018	PLATE-21	632508	PLATE-38	661491	PLATE-37
602497	PLATE-41	632995	PLATE-28	661493	PLATE-23
602497	PLATE-32	63440	PLATE-41	661925	PLATE-26
602497	PLATE-40	63440	PLATE-32	661925	PLATE-30
604506	PLATE-28	63440	PLATE-40	662571	PLATE-25
604553	PLATE-15	640762	PLATE-29	6650	PLATE-32
604557	PLATE-38	6411	PLATE-36	6733	PLATE-31
604603	PLATE-24	642032	PLATE-29	680166	PLATE-38
604614	PLATE-35	642786	PLATE-16	6965	PLATE-37
604707	PLATE-21	643367	PLATE-19	6965	PLATE-38
604717	PLATE-36	643576	PLATE-32	6A000068	PLATE-34
604756	PLATE-15	643691	PLATE-26	6A000070	PLATE-34
604756	PLATE-15	643692	PLATE-35	6A000124	PLATE-39
604758	PLATE-31	643705R	PLATE-30	6A000158	PLATE-39
604759	PLATE-31	643741	PLATE-32	6A000209	PLATE-27
604760	PLATE-35	643752	PLATE-24	6A000233	PLATE-25
604760	PLATE-36	643753	PLATE-24	6A000482	PLATE-42
604785	PLATE-20	643772R	PLATE-31	6A000482	PLATE-39
604856	PLATE-42	644812	PLATE-32	6A000484	PLATE-42
604868PC	PLATE-20	644812	PLATE-35	6A000485	PLATE-42
604887	PLATE-22	644813	PLATE-32	6A000486	PLATE-42
604890	PLATE-38	644813	PLATE-35	6A000486	PLATE-39
604948	PLATE-22	644814R	PLATE-35	6A000488	PLATE-42
604953	PLATE-38	644973R	PLATE-21	6A000488	PLATE-43
604954	PLATE-38	644973R	PLATE-31	6A000489	PLATE-42
605441	PLATE-35	645141	PLATE-23	6A000489	PLATE-39
60565	PLATE-27	652001	PLATE-35	6A000491	PLATE-42
6066	PLATE-31	652001	PLATE-36	6A000491	PLATE-43
6066	PLATE-32	652253R	PLATE-38	6A000491	PLATE-39
6078	PLATE-26	652520	PLATE-31	6A000494	PLATE-42
6078	PLATE-30	652520	PLATE-32	6A000495	PLATE-42
6078	PLATE-38	652521	PLATE-31	6A000495	PLATE-43
616649	PLATE-38	659857	PLATE-44	6A000495	PLATE-39
6173	PLATE-28	660032	PLATE-44	6A000497	PLATE-42

112

Print Date: 07-Apr-2022

PART NO	BLOCK	PART NO	BLOCK	PART NO	BLOCK
6A000497	PLATE-43	6A001003	PLATE-43	6A001305	PLATE-36
6A000497	PLATE-39	6A001003	PLATE-39	6A001307	PLATE-25
6A000498	PLATE-42	6A001004	PLATE-42	6A001357	PLATE-43
6A000500	PLATE-42	6A001004	PLATE-42	6A001358	PLATE-43
6A000500	PLATE-39	6A001004	PLATE-43	6A001476	PLATE-44
6A000505	PLATE-39	6A001004	PLATE-39	6A001543	PLATE-43
6A000506	PLATE-39	6A001020	PLATE-42	6A001545	PLATE-43
6A000507	PLATE-39	6A001020	PLATE-42	6A001547	PLATE-43
6A000509	PLATE-39	6A001020	PLATE-43	6A001637	PLATE-27
6A000512	PLATE-39	6A001037	PLATE-42	6A001657	PLATE-25
6A000519	PLATE-39	6A001037	PLATE-43	6A001834	PLATE-34
6A000520	PLATE-39	6A001037	PLATE-39	6B000387ED	PLATE-23
6A000522	PLATE-39	6A001038	PLATE-42	6B000850	PLATE-39
6A000523	PLATE-42	6A001038	PLATE-43	6B000935	PLATE-23
6A000597	PLATE-42	6A001038	PLATE-39	6B001057	PLATE-23
6A000597	PLATE-43	6A001039	PLATE-42	6B001109BL	PLATE-20
6A000601	PLATE-42	6A001039	PLATE-42	6B001109BW	PLATE-20
6A000601	PLATE-43	6A001039	PLATE-43	6B001109BY	PLATE-20
6A000621	PLATE-42	6A001039	PLATE-39	6B001109CB	PLATE-20
6A000621	PLATE-39	6A001041	PLATE-42	6B001109EG	PLATE-20
6A000738	PLATE-42	6A001042	PLATE-42	6B001109NB	PLATE-20
6A000738	PLATE-39	6A001057	PLATE-39	6B001109WR	PLATE-20
6A000738	PLATE-39	6A001075	PLATE-43	6B001118	PLATE-23
6A000739	PLATE-42	6A001078	PLATE-42	6B001129	PLATE-23
6A000739	PLATE-39	6A001078	PLATE-42	6B001132	PLATE-20
6A000740	PLATE-39	6A001078	PLATE-39	6B001138	PLATE-23
6A000748	PLATE-39	6A001113	PLATE-42	6B001140	PLATE-23
6A000752	PLATE-42	6A001113	PLATE-43	6B001312	PLATE-39
6A000752	PLATE-43	6A001150	PLATE-42	6B001455	PLATE-20
6A000804	PLATE-34	6A001150	PLATE-39	6B001495R	PLATE-23
6A000836	PLATE-43	6A001165	PLATE-39	6B001496R	PLATE-23
6A000874	PLATE-42	6A001166	PLATE-42	6B001520	PLATE-20
6A000874	PLATE-44	6A001166	PLATE-39	6B0015964ED	PLATE-20
6A000874	PLATE-39	6A001185	PLATE-42	6B0015964ED	PLATE-20
6A000900	PLATE-42	6A001196ED	PLATE-22	6B0015974ED	PLATE-20
6A000900	PLATE-39	6A001199	PLATE-18	6B0015974ED	PLATE-20
6A000904	PLATE-43	6A001201	PLATE-22	6B001599	PLATE-20
6A000918	PLATE-42	6A001205	PLATE-15	6B001627	PLATE-20
6A000918	PLATE-44	6A001233	PLATE-43	6B001672	PLATE-24
6A000944	PLATE-42	6A001235	PLATE-43	6B001921	PLATE-23
6A000957	PLATE-42	6A001249	PLATE-27	6B001978	PLATE-24
6A000959	PLATE-42	6A001256	PLATE-44	6B001987	PLATE-24
6A001003	PLATE-42	6A001305	PLATE-34	6B001988	PLATE-24

113

Print Date: 07-Apr-2022

PART NO	BLOCK	PART NO	BLOCK	PART NO	BLOCK
6B001989	PLATE-24	6D000265	PLATE-30	843000500	PLATE-14
6B002009	PLATE-23	6D000265	PLATE-37	843307	PLATE-5
6B002015	PLATE-23	6D000298	PLATE-42	847928	PLATE-6
6B002075	PLATE-20	6D000305	PLATE-30	87067	PLATE-31
6B002424	PLATE-26	6D000305	PLATE-38	872816	PLATE-19
6B002425	PLATE-26	6D000374	PLATE-23	8771	PLATE-31
6B002432BL	PLATE-20	6D000417	PLATE-30	884222808	PLATE-2
6B002432BW	PLATE-20	6D000478	PLATE-38	920013	PLATE-39
6B002432BY	PLATE-20	6D000479	PLATE-38	920083	PLATE-30
6B002432CB	PLATE-20	6D000480	PLATE-38	920084	PLATE-30
6B002432EG	PLATE-20	6D000481	PLATE-38	920088	PLATE-15
6B002432NB	PLATE-20	6D000482	PLATE-38	925501	PLATE-40
6B002432WR	PLATE-20	6D000517	PLATE-26	925501	PLATE-41
6C000016	PLATE-33	6D000518	PLATE-26	925521	PLATE-40
6C000041	PLATE-33	6D000544	PLATE-42	925571	PLATE-28
6C000060	PLATE-32	6D000544	PLATE-43	925573	PLATE-41
6C000190	PLATE-31	6D000550	PLATE-30	925574	PLATE-41
6C000191	PLATE-31	6D000550	PLATE-38	925581	PLATE-30
6C000275	PLATE-31	6D000717	PLATE-38	925581	PLATE-30
6C000275	PLATE-40	6D000741	PLATE-37	925603	PLATE-30
6C000277	PLATE-41	6D000742	PLATE-37	925786	PLATE-38
6C000279	PLATE-32	6D000743	PLATE-37	940004	PLATE-40
6C000279	PLATE-32	6D000743	PLATE-38	940004	PLATE-40
6C000279	PLATE-41	6D000744	PLATE-37	940005	PLATE-41
6C000312R	PLATE-33	6D000755	PLATE-42	940005	PLATE-41
6C000350	PLATE-35	6D000755	PLATE-43	940006	PLATE-41
6C000351	PLATE-35	6D001087	PLATE-25	940006	PLATE-41
6C000355	PLATE-35	6G000032	PLATE-26	940028	PLATE-14
6C000362	PLATE-32	6G000032	PLATE-30	940028	PLATE-14
6C000363	PLATE-32	7066R	PLATE-2	940069	PLATE-15
6C000427	PLATE-40	74414	PLATE-31	940071	PLATE-15
6C000427	PLATE-41	74414	PLATE-32	940072	PLATE-15
6C000431	PLATE-35	74521	PLATE-31	963486	PLATE-4
6C000448	PLATE-40	75708	PLATE-31	B001386	PLATE-30
6C000474SP	PLATE-31	78307	PLATE-24	B001561	PLATE-31
6C000475SP	PLATE-31	808000826	PLATE-20	B001954R	PLATE-21
6C000662	PLATE-32	8080	PLATE-26	B002630	PLATE-25
6D000143R	PLATE-30	8080	PLATE-30	B003115	PLATE-25
6D000144R	PLATE-30	82635R	PLATE-8	B003228	PLATE-35
6D000145R	PLATE-30	829661	PLATE-2	B003286	PLATE-22
6D000146R	PLATE-30	83040R	PLATE-6	B003784	PLATE-40
6D000188	PLATE-38	83041R	PLATE-6	B003784	PLATE-41
6D000192	PLATE-38	83054R	PLATE-5	B008478	PLATE-20

114

Print Date: 07-Apr-2022

PART NO	BLOCK	PART NO	BLOCK	PART NO	BLOCK
B014063	PLATE-19	B018442	PLATE-16	B073469	PLATE-34
B014066	PLATE-19	B018464	PLATE-12	B073478R	PLATE-29
B014555	PLATE-4	B018464	PLATE-13	B073479R	PLATE-29
B014684	PLATE-5	B018533	PLATE-7	B073481R	PLATE-29
B014705	PLATE-5	B018718	PLATE-6	B073715	PLATE-29
B014706	PLATE-5	B018853	PLATE-9	B073715	PLATE-30
B014732	PLATE-7	B018853	PLATE-13	B073810	PLATE-26
B014755	PLATE-2	B018854	PLATE-5	B073811	PLATE-26
B014760	PLATE-6	B018946	PLATE-6	B073812	PLATE-26
B015288	PLATE-5	B019047	PLATE-11	B073813	PLATE-26
B015483	PLATE-6	B023726R	PLATE-38	B073814	PLATE-26
B015592	PLATE-2	B023727R	PLATE-38	B073848	PLATE-27
B015598	PLATE-8	B024373	PLATE-32	B073849	PLATE-27
B015943	PLATE-8	B024474	PLATE-20	B073850R	PLATE-29
B016016	PLATE-16	B024532	PLATE-26	B074033	PLATE-30
B016120	PLATE-9	B024532	PLATE-30	B074261	PLATE-26
B016144	PLATE-3	B024537R	PLATE-30	B074261	PLATE-26
B016148	PLATE-9	B024614	PLATE-33	B074262	PLATE-26
B016192	PLATE-11	B024654R	PLATE-42	B074275	PLATE-26
B016368	PLATE-5	B024654R	PLATE-44	B074327	PLATE-30
B016611	PLATE-12	B041491	PLATE-39	B074539	PLATE-30
B016620	PLATE-11	B041600	PLATE-27	B074568	PLATE-29
B016774	PLATE-9	B041668	PLATE-20	B074593	PLATE-25
B016774	PLATE-16	B041794	PLATE-23	B074637	PLATE-23
B016774	PLATE-6	B041798	PLATE-25	B074905	PLATE-38
B016822	PLATE-17	B041853	PLATE-25	B074963	PLATE-25
B016823	PLATE-17	B042063	PLATE-37	B074999	PLATE-36
B016825	PLATE-17	B042063	PLATE-38	B075337	PLATE-25
B016828	PLATE-17	B042317	PLATE-36	B075495	PLATE-36
B016829	PLATE-17	B042356	PLATE-34	B075687ED	PLATE-27
B016834	PLATE-17	B042395	PLATE-35	B075693	PLATE-38
B016869	PLATE-17	B042486	PLATE-2	B075716	PLATE-34
B016939	PLATE-5	B042566	PLATE-34	B075732	PLATE-26
B017113	PLATE-6	B042612	PLATE-24	B075790	PLATE-25
B017165	PLATE-6	B042612	PLATE-24	B075798	PLATE-32
B017189	PLATE-9	B042726ED	PLATE-20	B075855	PLATE-30
B017323	PLATE-6	B042794	PLATE-36	B075949	PLATE-36
B017323	PLATE-6	B042976	PLATE-35	B075960	PLATE-34
B017431	PLATE-6	B042977	PLATE-35	B075965	PLATE-30
B017431	PLATE-6	B073084	PLATE-39	B075965	PLATE-38
B017438	PLATE-5	B073274	PLATE-23	B075974	PLATE-24
B017456	PLATE-5	B073275	PLATE-23	B075999	PLATE-30
B017746	PLATE-6	B073441	PLATE-15	B076000	PLATE-30

115