Parts Catalog

Commercial Vehicle

Ape_Xtra_LDX_And_LDXPlus_DSL_BSVI

PIAGGIO VEHICLES PRIVATE LIMITED
Registered Office: Bund Garden Road ,Opp. Residency Club , Pune (India)

Print Date: 07-Apr-2022

PLATES INDEX

Sr No.	Plate Name	Plate No.	Page No.
1	Engine & Gear Box Assly	1	1-2
2	CRANKCASE WITH STUD	2	3-4
3	CYLINDER BARREL & PISTON ASSEMBLY	3	5-6
4	BALANCER SHAFT ASSEMBLY	4	7-8
5	CYLINDER HEAD ASSEMBLY & PERIPHERALS	5	9-10
6	PUSH ROD, ROCKER LEVER, VALVES	6	11-12
7	EGR COOLER, EGR VALVE, AIR INTAKE MANIFOLD(D+3)	7	13-14
8	PTO COVER	8	15-16
9	ROCKER COVER, OMS & PIPES	9	17-18
10	CRANKSHAFT & CONNECTING ROD	10	19-20
11	FLYWHEEL RING GEAR AND TONE WHEEL	11	21-22
12	FUEL PUMP, ROCKER LUBRICATION & OIL RETURN PIPES	12	23-24
13	HP PIPES, LEAK OFF PIPE	13	25-26
14	CAMSHAFT ASSEMBLY	14	27-28
15	WATER PUMP & WATER PUMP PULLEY	15	29-30
16	STARTER MOTOR, ALTERNATOR & V-BELT	16	31-32
17	PERIPHERAL PART	17	33-34
18	Air Filter Assly & Air intake system	18	35-36
19	Radiator Assembely & Cooling System	19	37-40
20	fuel tank assly. & Pipes	20	41-42
21	ALUMINIUM CLUTCH ASSEMBLY	21	43-44
22	CLUTCH & COVER ASSEMBLY (FOR ALUMINIUM CLUTCH)	22	45-46
23	main_housing_fare meter housing & Speedo drive	23	47-48
24	Gear Box Cover	24	49-50
25	Engine Cover	25	51-52
26	primary_secondary_shaft	26	53-54
27	Differential Unit	27	55-58
28	drive shaft & Wheel assly.	28	59-60
29	Gear Shifter Assembly	29	61-62
30	ENGINE MOUNTING	30	63-64

Print Date: 07-Apr-2022

PLATES INDEX

Sr No.	Plate Name	Plate No.	Page No.
31	DASHBOARD ASSEMBLY & Battery Mounting	31	65-68
32	Main frame Assly & Cargo Body & Mirror	32	69-74
33	DOORS, TOOLS AND WHEELS	33	75-80
34	Windshield /Glass/ Seats/ Carpets/Mirrors &Engine Door.	34	81-82
35	MUDGUARD & STICKER	35	83-84
36	REAR SUSPENSION	36	85-88
37	STEERING COLUMN AND FRONT SUSPENSION	37	89-92
38	HANDLE BAR AND CONTROL	38	93-96
39	BRAKE - TANDEM MASTER CYLINDER, BRAKE PIPE AND HAND BRAKES	39	97-100
40	Control Cables	40	101-102
41	ELECTRICAL DEVICES / HEAD LAMP & TAIL LAMP ASSLY.	41	103-106
42	Wiper motor	42	107-108
43	Wiring Harness	43	109-112
44	FRONT BRAKE ASSEMBLY SELF ADJUSTING (DIA 180 X 40 MM)	44	113-114
45	REAR BRAKE ASSEMBLY SELF ADJUSTING (DIA 180 X 40 MM)	45	115-116

Print Date: 07-Apr-2022

PICTORIAL PLATES INDEX

PLATE-1 **Engine & Gear Box Assly**

Page No. :1-2

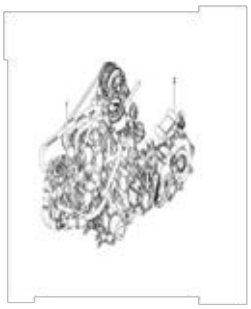

PLATE-2 **CRANKCASE WITH STUD**

Page No. :3-4

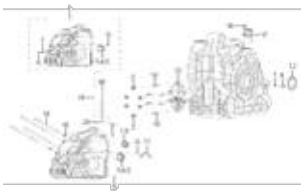

PLATE-3 **CYLINDER BARREL & PISTON ASSEMBLY**

Page No. :5-6

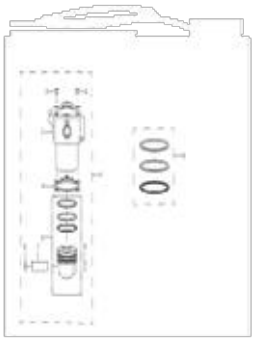

PLATE-4 **BALANCER SHAFT ASSEMBLY**

Page No. :7-8

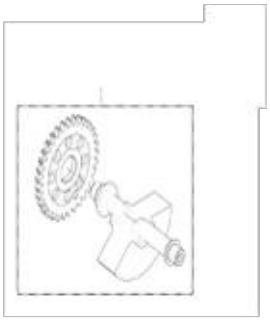

PLATE-5 **CYLINDER HEAD ASSEMBLY & PERIPHERALS**

Page No. :9-10

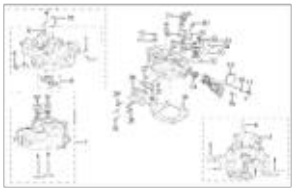

PLATE-6 **PUSH ROD, ROCKER LEVER, VALVES**

Page No. :11-12

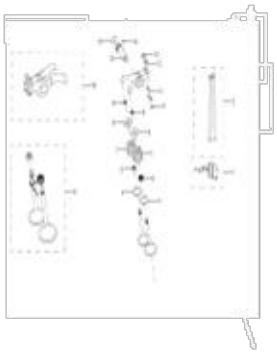

PLATE-7 **EGR COOLER, EGR VALVE, AIR INTAKE MANIFOLD(D+3)**

Page No. :13-14

PLATE-8 **PTO COVER**

Page No. :15-16

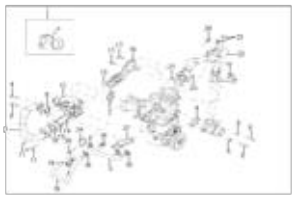

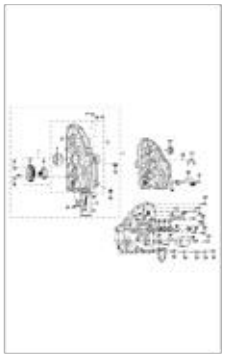

Print Date: 07-Apr-2022

PICTORIAL PLATES INDEX

PLATE-9 **ROCKER COVER, OMS & PIPES**

Page No. :17-18

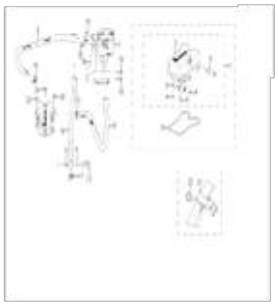

PLATE-10 **CRANKSHAFT & CONNECTING ROD**

Page No. :19-20

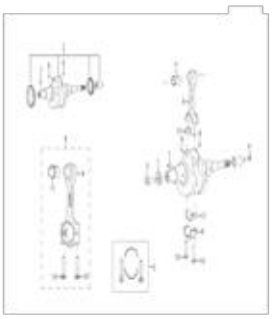

PLATE-11 **FLYWHEEL RING GEAR AND TONE WHEEL**

Page No. :21-22

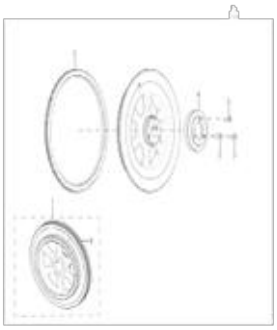

PLATE-12 **FUEL PUMP, ROCKER LUBRICATION & OIL RETURN PIPES**

Page No. :23-24

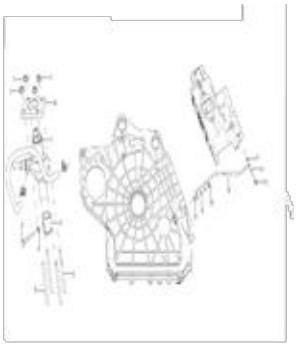

PLATE-13 **HP PIPES, LEAK OFF PIPE**

Page No. :25-26

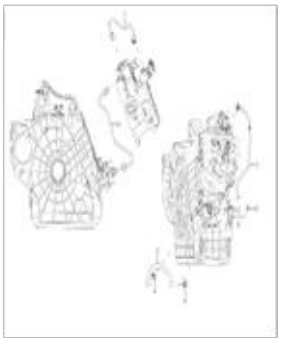

PLATE-14 **CAMSHAFT ASSEMBLY**

Page No. :27-28

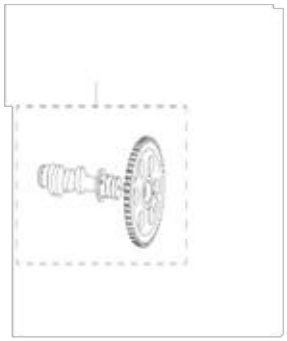

PLATE-15 **WATER PUMP & WATER PUMP PULLEY**

Page No. :29-30

PLATE-16 **STARTER MOTOR, ALTERNATOR & V-BELT**

Page No. :31-32

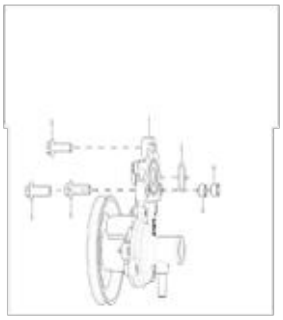

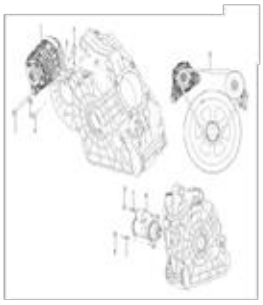

Print Date: 07-Apr-2022

PICTORIAL PLATES INDEX

PLATE-17 **PERIPHERAL PART**

Page No. :33-34

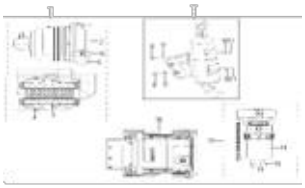

PLATE-18 **Air Filter Assly & Air intake system**

Page No. :35-36

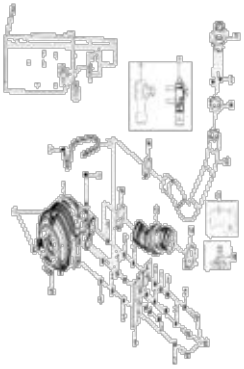

PLATE-19 **Radiator Assembely & Cooling System**

Page No. :37-40

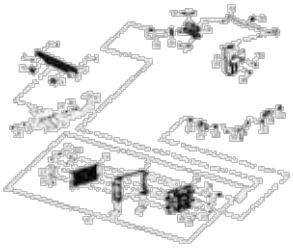

PLATE-20 **fuel tank assly. & Pipes**

Page No. :41-42

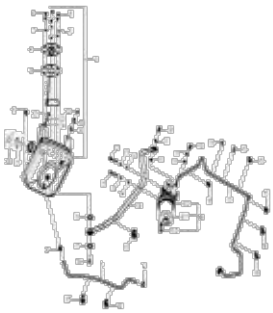

PLATE-21 **ALUMINIUM CLUTCH ASSEMBLY**

Page No. :43-44

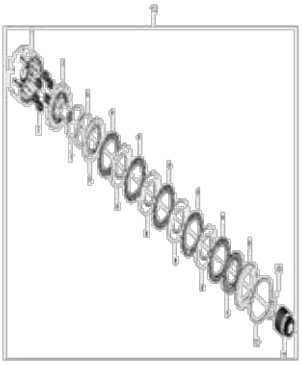

PLATE-22 **CLUTCH & COVER ASSEMBLY (FOR ALUMINIUM CLUTCH)**

Page No. :45-46

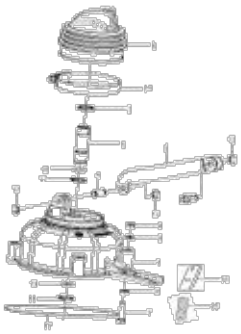

PLATE-23 **main_housing_fare meter housing & Speedo drive**

Page No. :47-48

PLATE-24 **Gear Box Cover**

Page No. :49-50

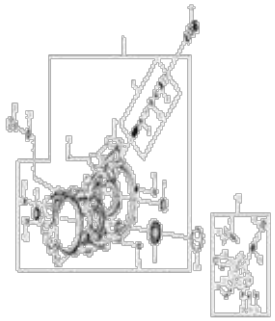

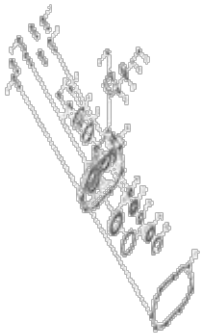

Print Date: 07-Apr-2022

PICTORIAL PLATES INDEX

PLATE-25 **Engine Cover**

Page No. :51-52

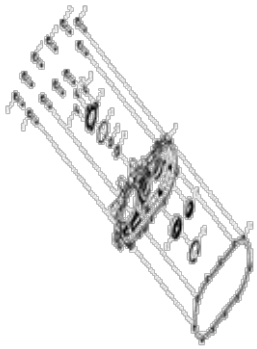

PLATE-26 **primary_secondary_shaft**

Page No. :53-54

PLATE-27 **Differential Unit**

Page No. :55-58

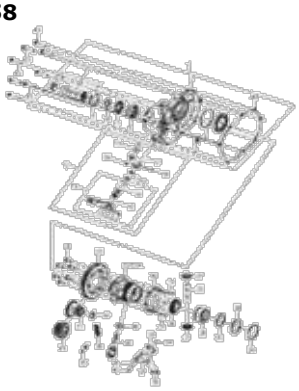

PLATE-28 **drive shaft & Wheel assly.**

Page No. :59-60

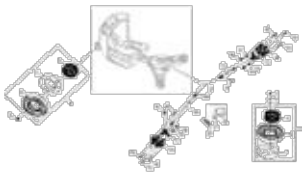

PLATE-29 **Gear Shifter Assembly**

Page No. :61-62

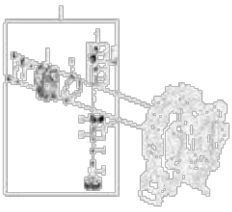

PLATE-30 **ENGINE MOUNTING**

Page No. :63-64

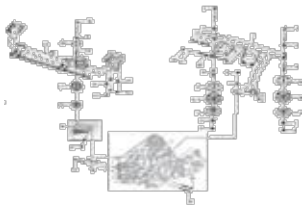

PLATE-31 **DASHBOARD ASSEMBLY & Battery Mounting**

Page No. :65-68

PLATE-32 **Main frame Assly & Cargo Body & Mirror**

Page No. :69-74

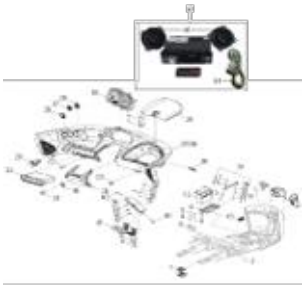

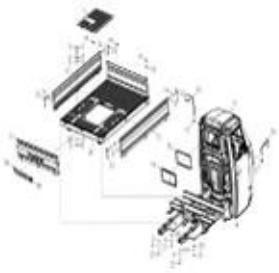

Print Date: 07-Apr-2022

PICTORIAL PLATES INDEX

PLATE-33 **DOORS, TOOLS AND WHEELS**

Page No. :75-80

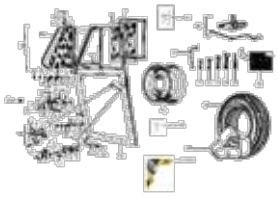

PLATE-34 **Windshield /Glass/ Seats/ Carpets/Mirrors &Engine Door.**

Page No. :81-82

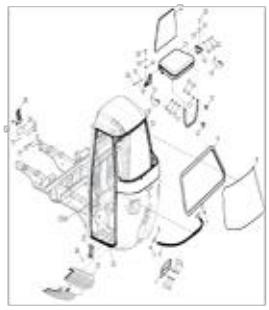

PLATE-35 **MUDGUARD & STICKER**

Page No. :83-84

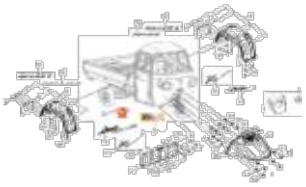

PLATE-36 **REAR SUSPENSION**

Page No. :85-88

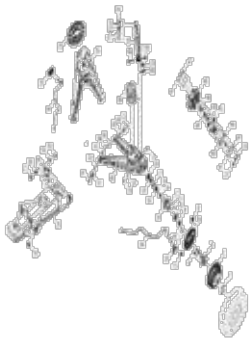

PLATE-37 **STEERING COLUMN AND FRONT SUSPENSION**

Page No. :89-92

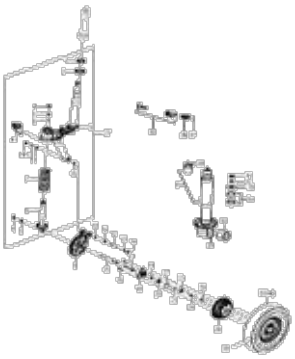

PLATE-38 **HANDLE BAR AND CONTROL**

Page No. :93-96

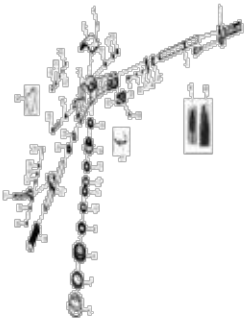

PLATE-39 **BRAKE - TANDEM MASTER CYLINDER, BRAKE PIPE AND HAND BRAKES**

Page No. :97-100

PLATE-40 **Control Cables**

Page No. :101-102

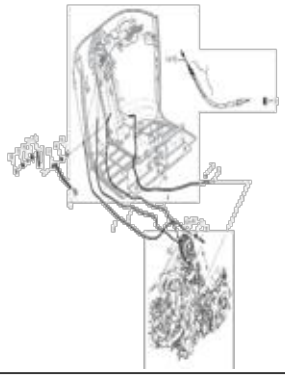

Print Date: 07-Apr-2022

PICTORIAL PLATES INDEX

PLATE-41 **ELECTRICAL DEVICES / HEAD LAMP & TAIL LAMP ASSLY.**
Page No. :103-106

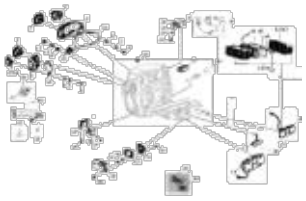

PLATE-42 **Wiper motor**
Page No. :107-108

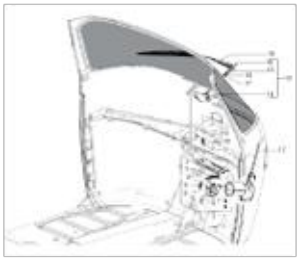

PLATE-43 **Wiring Harness**
Page No. :109-112

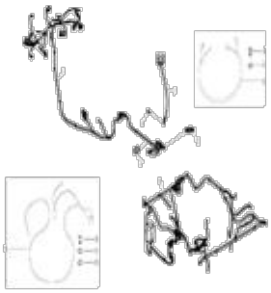

PLATE-44 **FRONT BRAKE ASSEMBLY SELF ADJUSTING (DIA 180 X 40 MM)**
Page No. :113-114

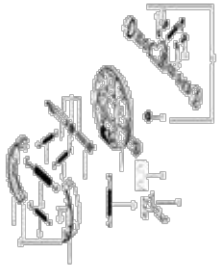

PLATE-45 **REAR BRAKE ASSEMBLY SELF ADJUSTING (DIA 180 X 40 MM)**
Page No. :115-116

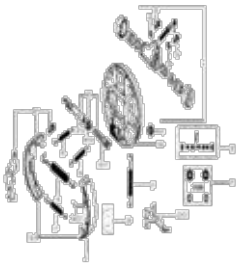

Print Date: 07-Apr-2022

PLATE-1

Engine & Gear Box Assly

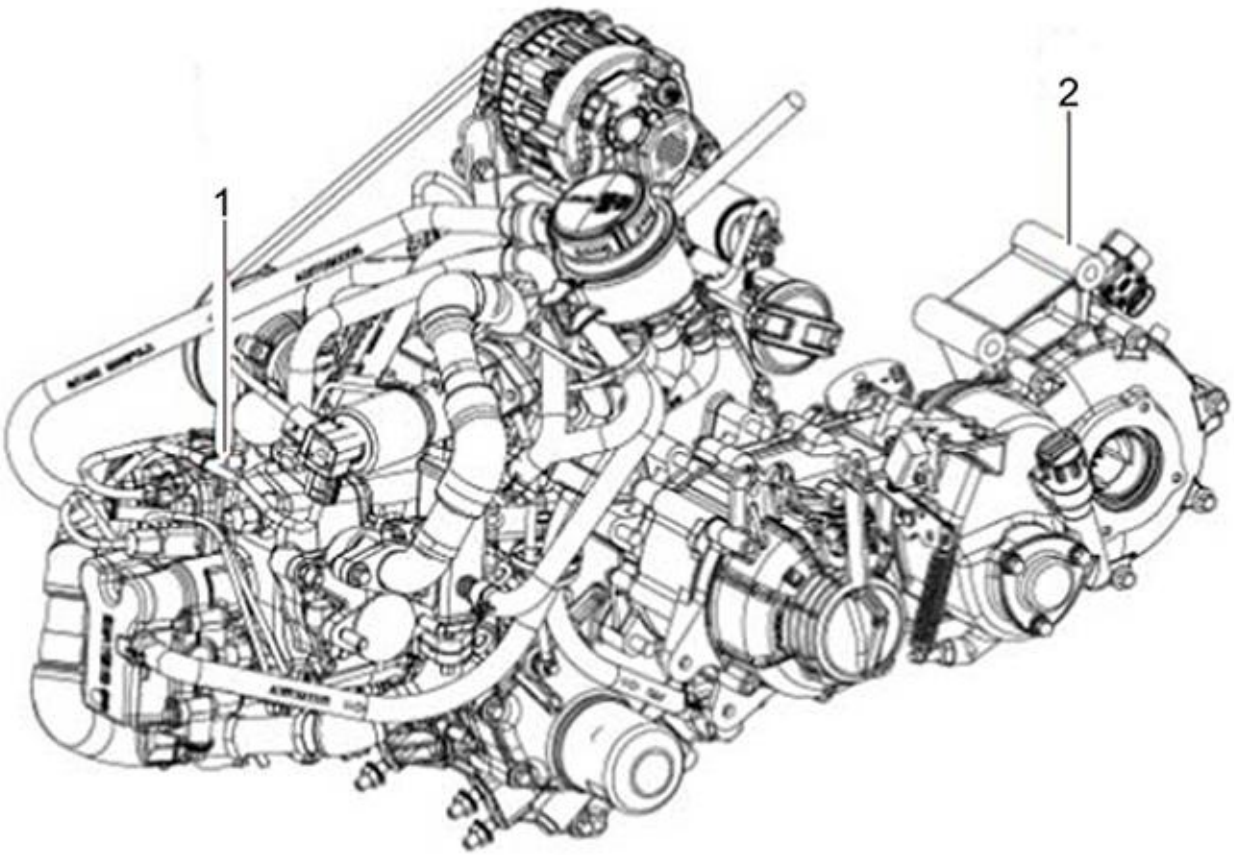
1
2

1

Print Date: 07-Apr-2022

PLATE-1

Engine & Gear Box Assly

Fig. No.	Part No.	Description	Qty	Remarks
1	6A000056	ENGINE ASSY APE 501 BSVI DIESEL	1	common
2	CM305001	GEARBOX ASSEMBLY APÃ? 501 CARGO	1	LDx / LDX+ & Dx
2	CM305004	GEARBOX ASSEMBLY (APE 501 XTRA HS)	1	App. Only For High Slope Veh .(HD)

2

Print Date: 07-Apr-2022

PLATE-2
CRANKCASE WITH STUD

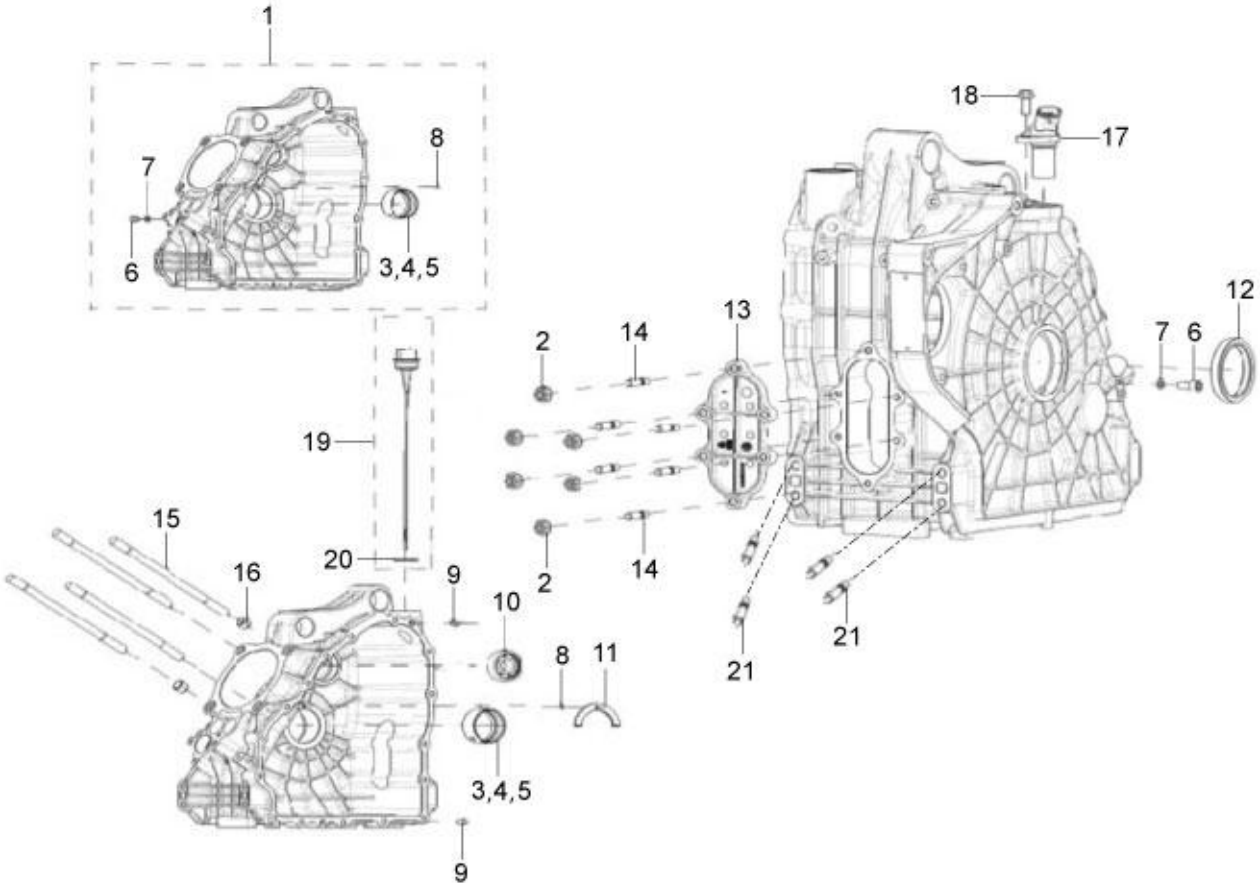
1
7
8
6
3,4,5
18
17
12
13
2
14
7
6
19
15
16
20
9
10
2
14
8
11
21
21
3,4,5
9

3

Print Date: 07-Apr-2022

PLATE-2

CRANKCASE WITH STUD

Fig. No.	Part No.	Description	Qty	Remarks
1	A01A010020	CRANKCASE ASSEMBLY WITH BUSH AND CAP SCREW WITH WASHER	1	Cutoff S0H9101401(+order 3.3Gen Bolt&Washer)
2	E07502811	COLLAR NUT M6 X 1	6	
3	E60022258	MAIN BEARING BUSH-STD (FINISHED)	1	Finished
3	ESP650DCR012	MAIN BEARING BUSH-STD	1	Semi-finished
4	ESP650DCR021	BEARING U/S 0.5 MM (MAIN BEARING BUSH U/S 0.5 MM)	1	QTY. 1 REQUIRED AS PER MAIN JOURNAL SIZE
5	ESP650DCR022	BEARING U/S 1 MM (MAIN BEARING BUSH U/S 1.0 MM)	1	QTY. 1 REQUIRED AS PER MAIN JOURNAL SIZE
6	E422973009	CAP SCREW M6X1X12	1	
7	E260467001	JOINT	1	
8	ESP650DNB027	DOWELPIN(Ã?4X8FORTHRUSTWASHER)	1	
9	A01M010009	DOWEL PIN FOR PTO COVER (DIA. 8 MM)	2	
10	A01G030002	BEARING, MASS BALANCER	1	
11	ESP650DNB022	THRUSTWASHER	1	
12	ESP650DCR014	OIL SEAL-CRANKSHAFT SUPPORT (FWE SIDE)	1	
13	A01M110002	WINDOW COVER	1	
14	A01B010009	STUD-WINDOW COVER (M6X1)	6	
15	A01B020001	STUD - CYLINDER HEAD	4	
16	ESP650DBP005	HOLLOW DOWEL-CYL.HEAD (?15ODX?12.6IDX12L	2	
17	ESP650DCR002	CRANK SENSOR	1	
18	ESP650DNB011	HEX HEAD FLANGE BOLT M6X16	1	
19	A01A090006	DIPSTICK ASSY (WITH O RING)	1	
20	E91200082	O RING	1	
21	E07500520	STUD M 10 X 1.5 X 44	4	
22	A01A010030	FWE SIDE BUSH ROTATION	1	NI

4

Print Date: 07-Apr-2022

PLATE-3

CYLINDER BARREL & PISTON ASSEMBLY

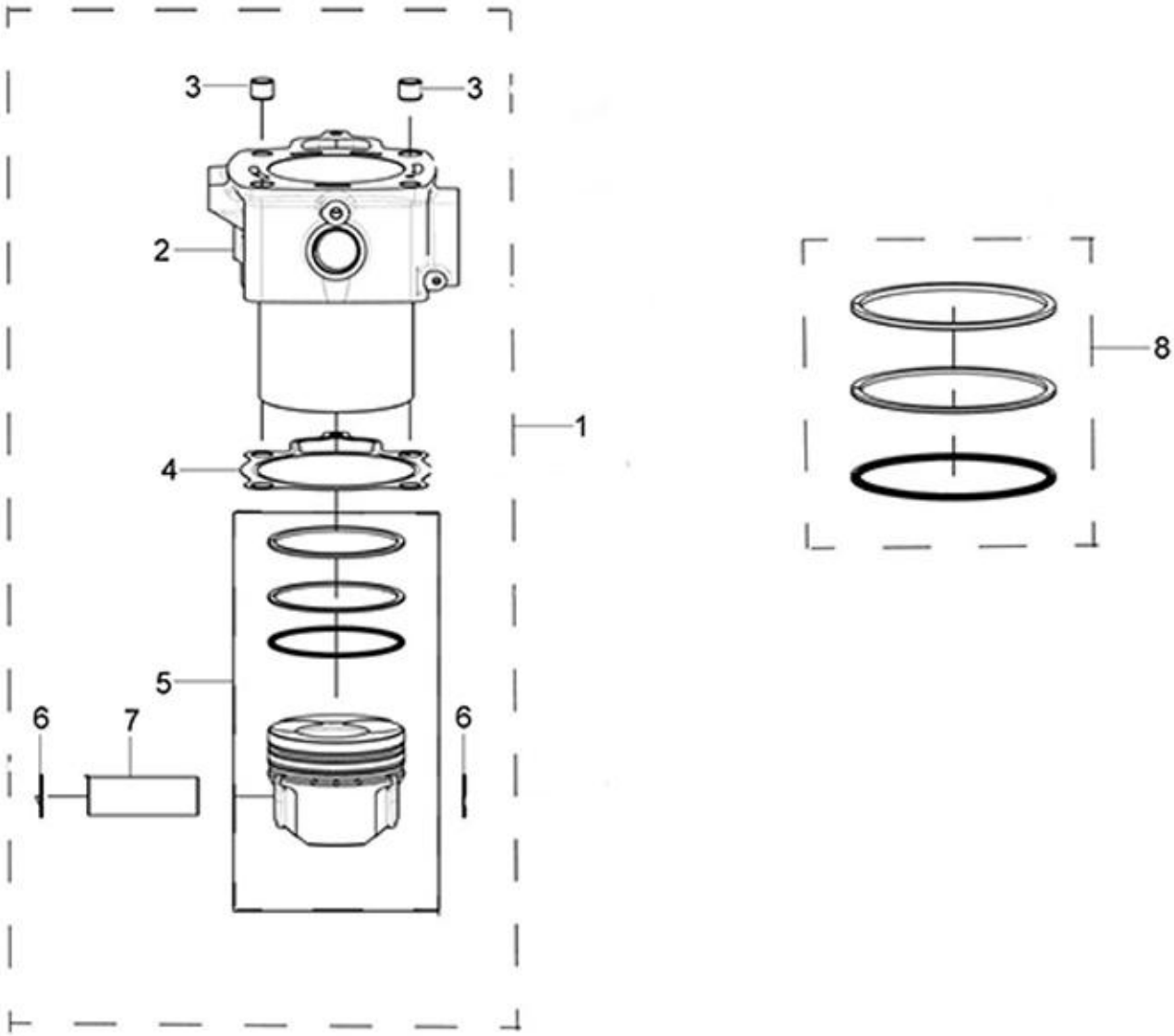
3
3
2
1
4
5
6
7
6
8

5

Print Date: 07-Apr-2022

PLATE-3

CYLINDER BARREL & PISTON ASSEMBLY

Fig. No.	Part No.	Description	Qty	Remarks
1	A01A010018	BARREL AND PISTON ASSEMBLY KIT	1	
2	A01A010002	CYLINDER BARREL ASSEMBLY	1	
3	ESP650DBP005	HOLLOW DOWEL-CYL.HEAD (?15ODX? 12.6IDX12L	2	
4	A01S010002	GASKET (BARREL AND CRANKCASE)	1	0.5 mm THICKNESS GASKET TO BE USED
5	A01A050004	PISTON ASSEMBLY	1	
6	ESP650DBP007	CIRCLIP-PISTON	2	
7	ESP650DBP006	PISTON PIN	1	
8	A01A050003	PISTON RING SET	1	

6

Print Date: 07-Apr-2022

PLATE-4

BALANCER SHAFT ASSEMBLY

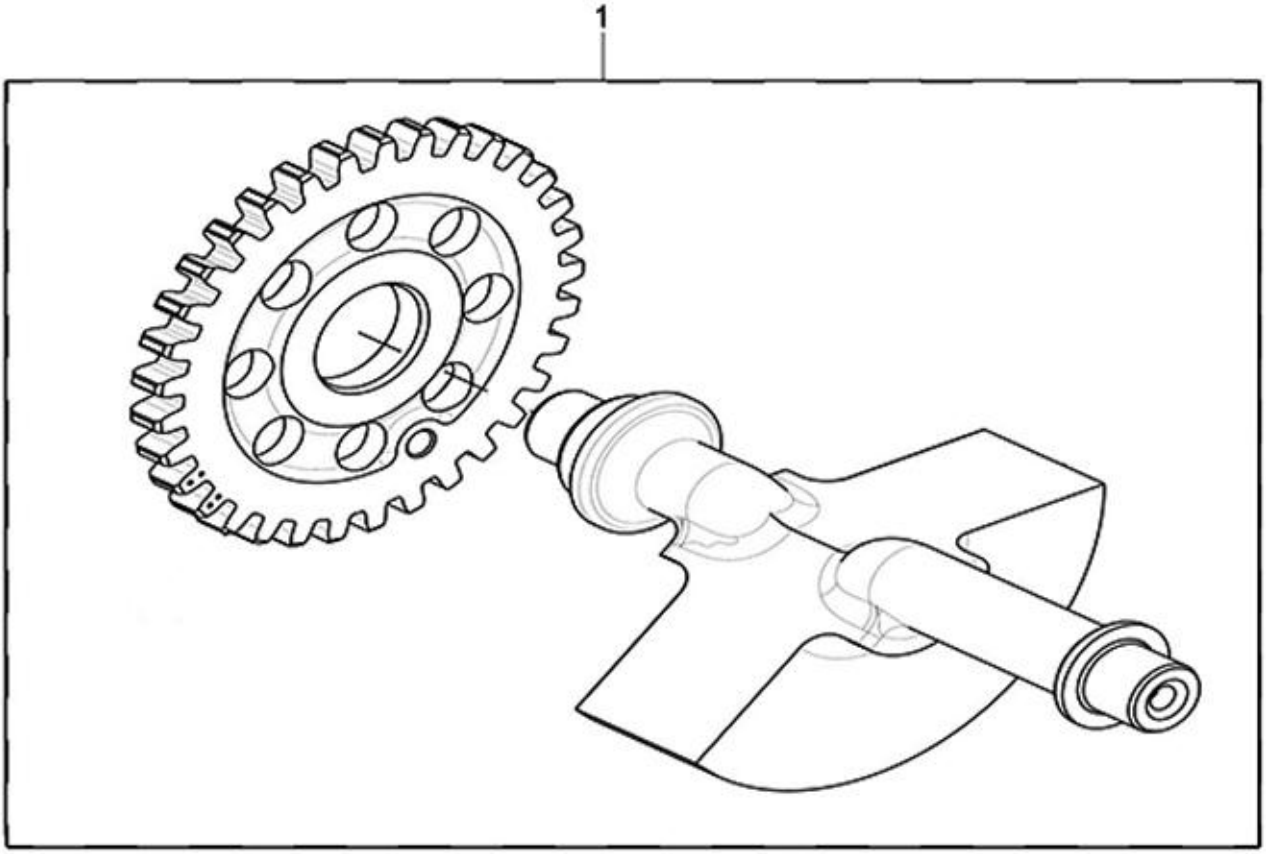
1

7

Print Date: 07-Apr-2022

PLATE-4

BALANCER SHAFT ASSEMBLY

Fig. No.	Part No.	Description	Qty	Remarks
1	A01A080001	BALANCER SHAFT ASSY.	1	

8

Print Date: 07-Apr-2022

PLATE-5

CYLINDER HEAD ASSEMBLY & PERIPHERALS

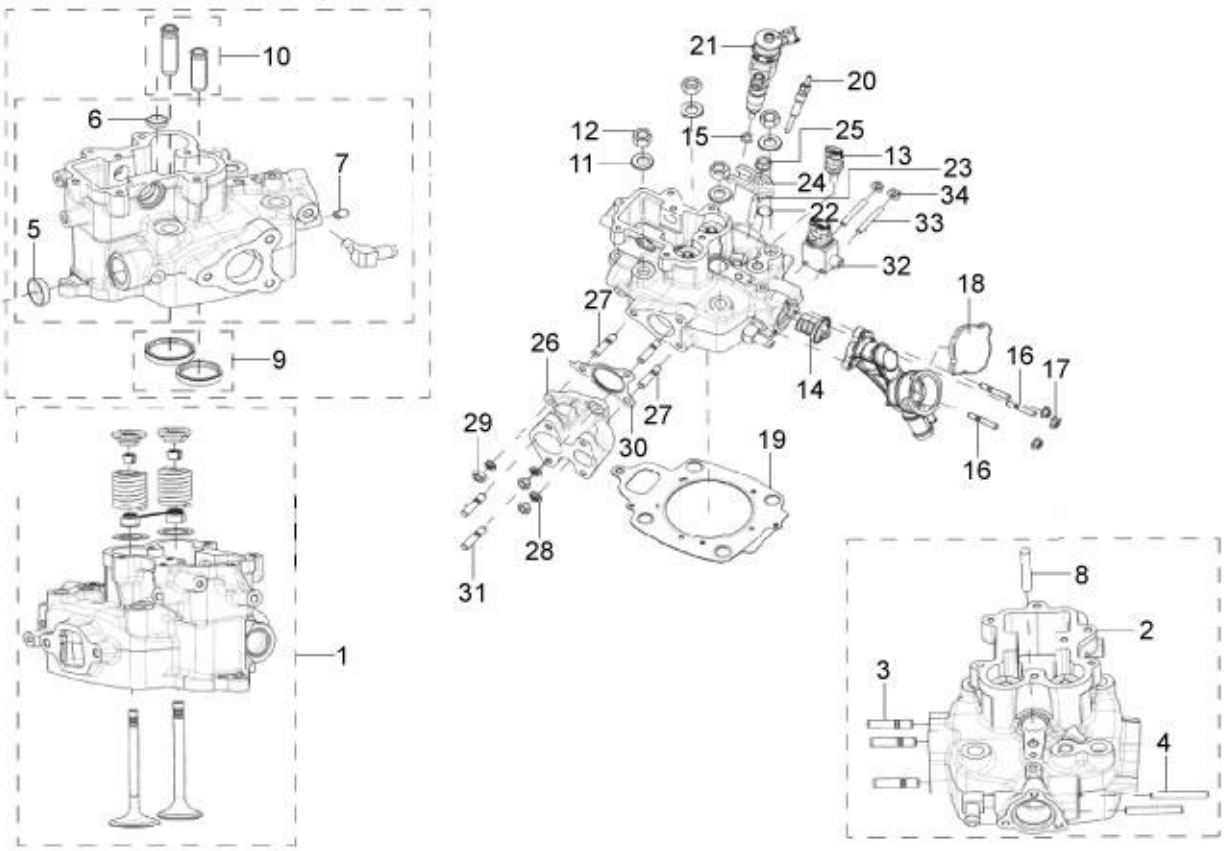
10
6
7
5
9
1
21
20
12
15
25
11
13
23
24
34
22
33
32
18
27
26
16
17
14
27
29
30
19
16
28
31
8
2
3
4

9

Print Date: 07-Apr-2022

PLATE-5

CYLINDER HEAD ASSEMBLY & PERIPHERALS

Fig. No.	Part No.	Description	Qty	Remarks
1	A01A020001	CYLINDER HEAD ASSY WITH VALVE AND SPRING	1	
2	A01A020001	CYLINDER HEAD ASSY WITH VALVE AND SPRING	1	
3	E07500508	STUD M8X1.25X37	3	
4	ESP650DNB005	STUD M6X1X35IS:1862-P10.9	2	
5	ESP650DNB023	CORE PLUG	1	
6	E40020418	CORE PLUG	1	
7	A01B010001	GRUB SCREW	1	
8	01B020001	STUD INJECTOR CLAMP	1	
9	A01A020006	SET OF VALVE SEAT INSERT (INLET AND EXHAUST)	1	IT IS A SEMIFINISHED.
10	ESP650DKT005	SET OF VALVE GUIDES (STD) (INLET & EXHAUST)	1	IT IS A SEMIFINISHED.
11	ESP650DNB026	WASHER (24X13X3MMTHK.FOR CYL.HEAD)	4	
12	ESP650DNB021	NUT Â?CYLINDER HEAD	4	
13	ESP650DCH019	COOLANT TEMPERATURE SENSOR	1	
14	A01G100001	THERMOSTAT ASSEMBLY	1	
15	A01B120002	INJECTOR WASHER	1	Under Development
16	ESP650DNB024	STUD-M6X1X37	3	
17	E07502811	COLLAR NUT M6 X 1	3	
18	6A000557	PRESSURE CAP	1	
19	A01S020001	CYLINDER HEAD GASKET	1	1.2 mm THICKNESS GASKET TO BE USED
20	A01G140010	GLOW PLUG	1	
21	A01G120003	INJECTOR	1	
22	ESP650DFS001	INJECTOR CLAMP PIN	1	
23	01B020001	STUD INJECTOR CLAMP	1	
24	ESP650DCH007	INJECTOR CLAMP	1	
25	E60000227	HEX. NUT FOR INJECTOR CLAMP M8X1.25	1	
26	A01M070002	EXHAUST MANIFOLD	1	
27	E07500528	STUD-EXHAUST MANIFOLD	3	Under Development
28	E1756507	SPRING WASHER M8	3	
29	E50000225	NUT SS	3	
30	A01S070001	GASKET (EXHAUST FLANGE)	1	
31	E07500508	STUD M8X1.25X37	2	
32	A01G120013	FUEL DISTRIBUTOR BLOCK (FDB)	1	
33	ESP650DNB005	STUD M6X1X35IS:1862-P10.9	2	
34	E07502811	COLLAR NUT M6 X 1	2	

10

Print Date: 07-Apr-2022

PLATE-6

PUSH ROD, ROCKER LEVER, VALVES

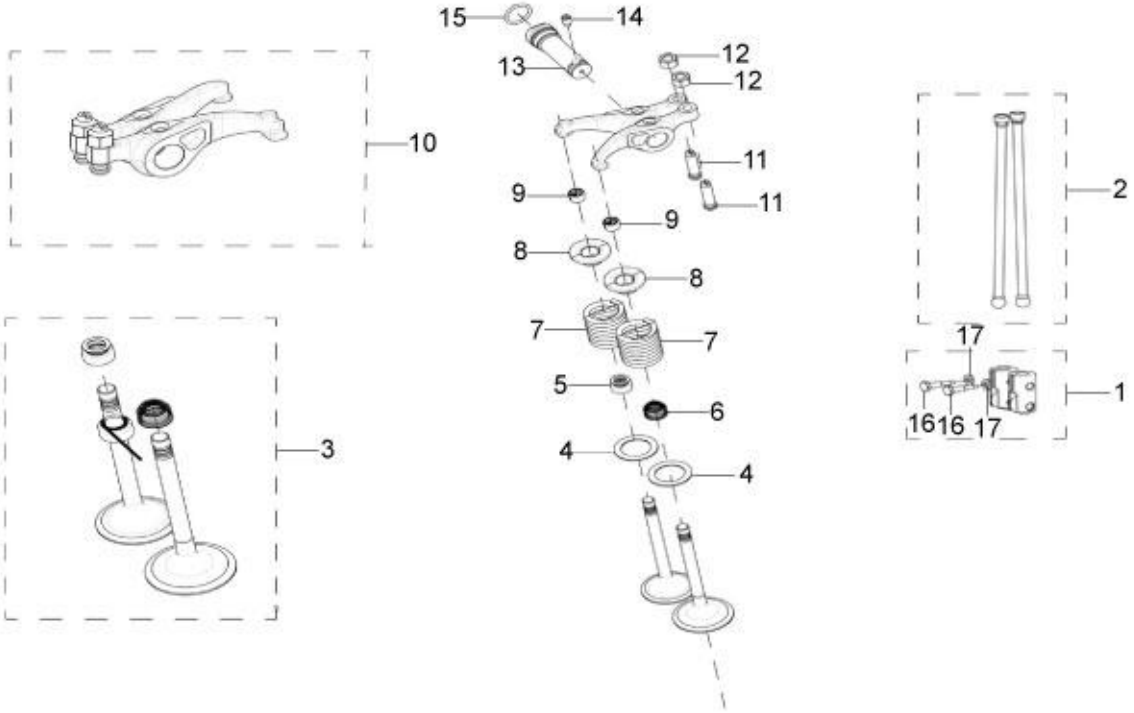
15
14
13
12
12
10
11
11
9
9
8
8
7
7
5
6
4
4
3
2
17
1
16
16
17

11

Print Date: 07-Apr-2022

PLATE-6

PUSH ROD, ROCKER LEVER, VALVES

Fig. No.	Part No.	Description	Qty	Remarks
1	A01A060009	TAPPET ASSEMBLY SET	1	app.3.1 Gen Bolt Cr.Case B4 cutoff S0H9101401
2	A01A060010	PUSH ROD SET	1	
3	A01A060008	VALVE SET WITH STEM SEAL	1	
4	ESP650DCH017	BOTTOM SHEET FOR VALVE SPRING	2	
5	ESP650DCH020	OIL SEAL	1	
6	ESP650DCH021	INTAKE VALVE STEM SEAL	1	
7	ESP650DCH018	VALVE SPRING	2	
8	ESP650DCH016	RETAINERÂ??VALVE SPRING	2	
9	ESP650DCH025	VALVE COLLET(MULTI GROOVE)	4	
10	ESP650DCH024	ROCKER LEVER SET	1	
11	E31M060003	SCREW VALVE ADJUSTING M7X0.75	2	
12	ESP650DNB018	NUT M7X0.75	2	
13	ESP650DCH004	ROCKER FULCRUM	1	
14	ESP650DNB004	HEXAGON SOCKET SET SCREW M6X10-IS:6094-F	1	
15	ESP650DGS002	O-RING OIL PICK UP PIPE	1	
16	A01G060008	GUIDING BOLT (M8X1) VALVE TAPPET(GEN 3.3)	2	App. For modi.crank case Gen.3.3 bolt
17	A01B060004	WASHER (GEN 3.3)	2	App. For modi.crank case Gen.3.3 bolt

12

Print Date: 07-Apr-2022

PLATE-7

EGR COOLER, EGR VALVE, AIR INTAKE MANIFOLD(D+3)

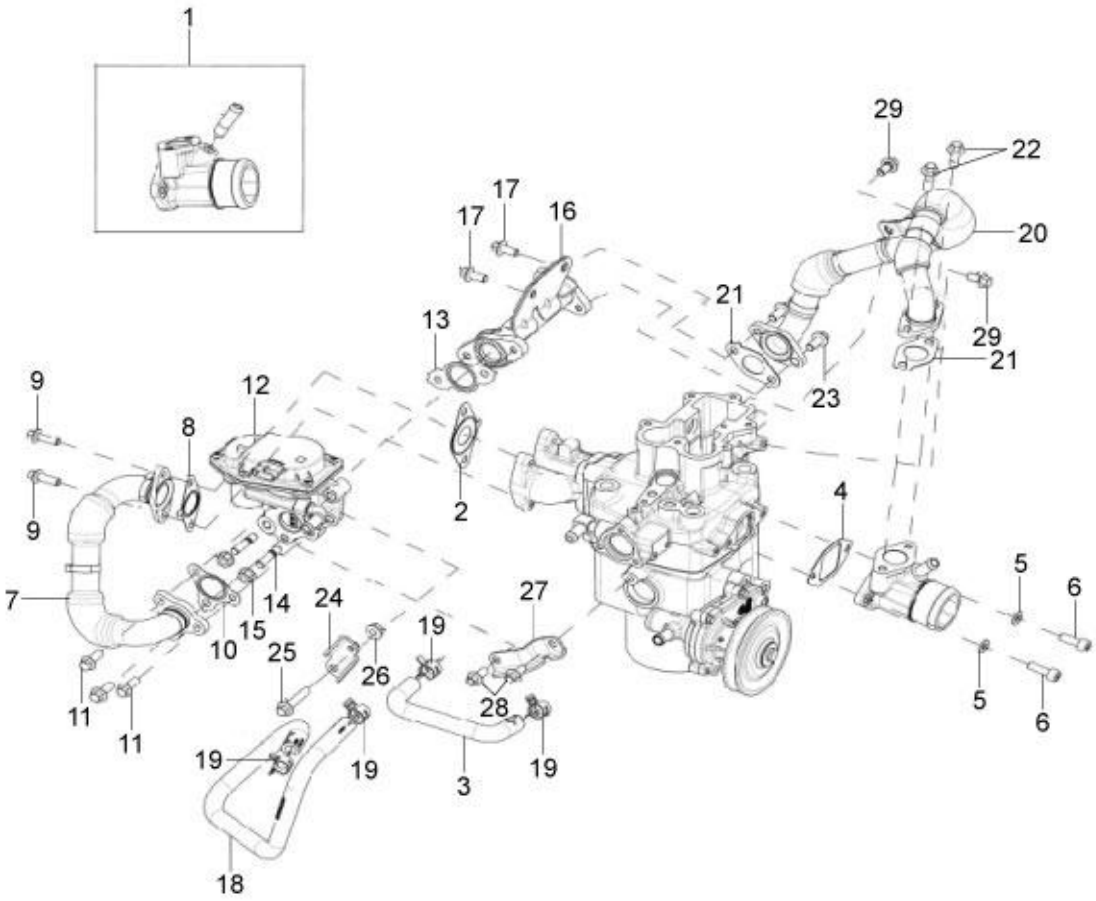
1
29
22
17
17
16
20
21
13
29
21
9
12
23
8
2
4
9
5
6
7
14
24
27
15
19
10
25
26
28
5
6
11
11
19
19
19
3
18

13

Print Date: 07-Apr-2022

PLATE-7

EGR COOLER, EGR VALVE, AIR INTAKE MANIFOLD(D+3)

Fig. No.	Part No.	Description	Qty	Remarks
1	A01A070001	INLET MANIFOLD (ASSY)	1	Under Development
2	A01S070011	GASKET - EXHAUST MANIFOLD TO ATS – DIA.23	1	Under Development
3	A01T100004	HOSE- EGR VALVE TO WATER PUMP	1	
4	ESP650DGS006	GASKET-AIR INTAKE MANIFOLD	1	
5	E50000613	MACHINED WASHER 16X8.1X2	2	
6	E260973027	CAP SCREW M8X 1.25	2	
7	A01T070002	EGR PIPE ASSY - EXHAUST MANIFOLD TO EGR VALVE	1	
8	A01S070007	GASKET-EXH MANIFOLD TO EGR PIPE (HOT END)	1	
9	A01B140004	BOLT- EXH. MANIFOLD AND EGR PIPE (M8X25)	2	
10	A01S070004	GASKET - EGR PIPE FLANGE TO EGR VALVE.	1	
11	E50002806	COLLAR BOLT M8X1.25X25X22	3	
12	A01G070006	ELECTRICAL MOTORISED EGR VALVE (WITH H-BRIDGE)	1	
13	A01S070005	GASKET EGR VALVE TO EGR COOLER	1	
14	E07500508	STUD M8X1.25X37	2	
15	E07502810	COLLAR NUT M8 X 1.25	2	
16	A01G070009	EGR PIPE INTERMEDIATE	1	Under Development
17	E07502801	FLANGE BOLT FOR SILENCER MOUNTING BRACKET	2	
18	A01T100008	HOSE - CYLINDER HEAD TO EGR VALVE	1	
19	ESP650DNB032	CLAMP (CTC)(OD-19MM)	4	
20	A01T070001	EGR PIPE ASSY - EGR COOLER TO INTAKE MANIFOLD	1	
21	A01S070002	GASKET - EGR PIPE FLANGE TO EGR COOLER	2	
22	A01B140004	BOLT- EXH. MANIFOLD AND EGR PIPE (M8X25)	2	
23	E07502801	FLANGE BOLT FOR SILENCER MOUNTING BRACKET	2	
24	A01M100003	BRACKET - EGR SUPPORT -1	1	
25	E07502802	COLLAR BOLT ROCKER COVER M8X40	1	
26	E07502810	COLLAR NUT M8 X 1.25	1	
27	A01M100004	BKT - EGR SUPPORT - 2	1	
28	E07502801	FLANGE BOLT FOR SILENCER MOUNTING BRACKET	2	
29	01B150096	M 8 X 16 - HEX. HEAD FLANGE BOLT	2	

14

Print Date: 07-Apr-2022

PLATE-8
PTO COVER

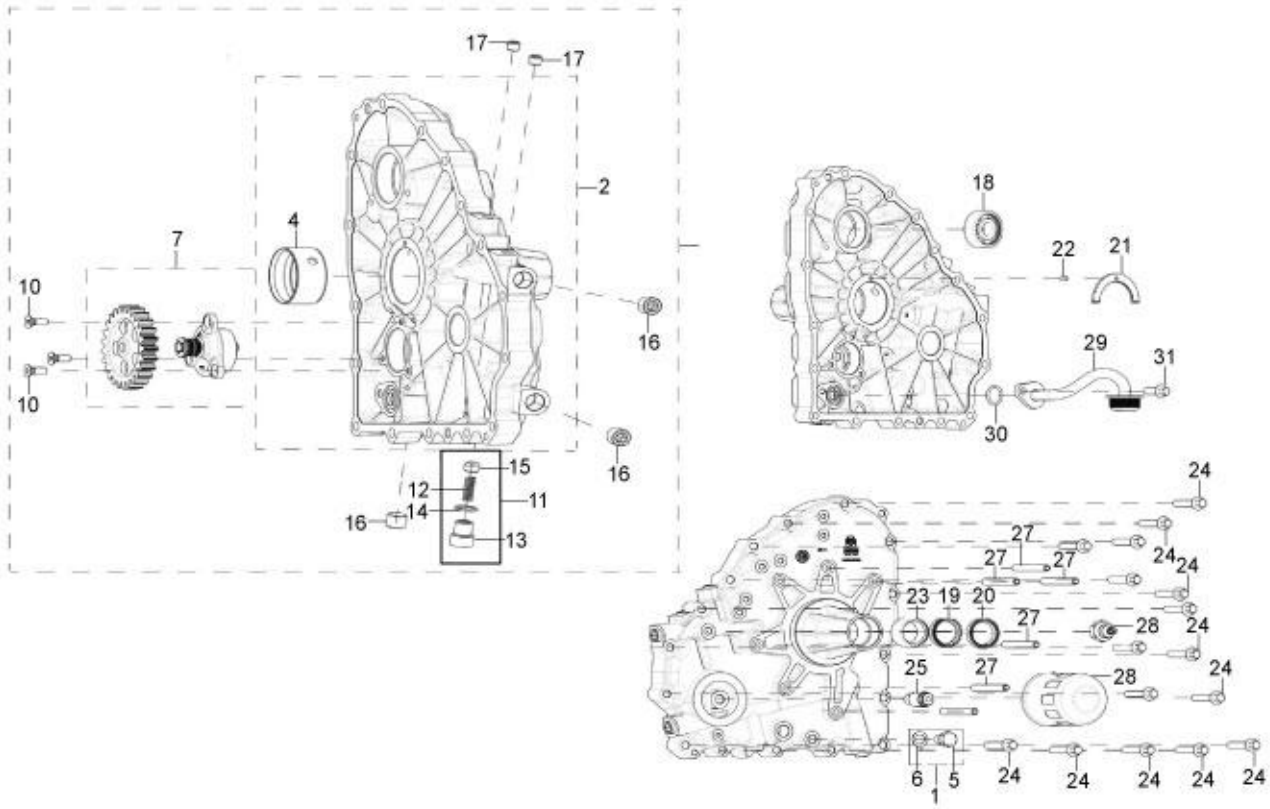
17
17
2
4
7
10
10
16
16
15
12
11
14
16
13
18
22
21
29
31
30
24
27
27
27
24
24
23
19
20
27
28
24
25
27
28
24
6
5
1
24
24
24
24
24

15

Print Date: 07-Apr-2022

PLATE-8
PTO COVER

Fig. No.	Part No.	Description	Qty	Remarks
1	A01A090017	OIL DRAIN PLUG WITH WASHER	1	CONSISTS OF 5&6
2	A01A010003	PTO COVER WITH BUSH	1	
3	A01G050001	CIRCLIP FOR OIL PUMP ASSY.	1	Under Development
4	ESP650DCR012	MAIN BEARING BUSH-STD	1	Semi-finished
4	E60022258	MAIN BEARING BUSH-STD (FINISHED)	1	Finished
5	E50000421	MAGNETIC DRAIN PLUG M12X1.5	1	
6	E250467014	JOINT 12X19X1(JOINT DRAIN PLUG)	1	
7	A01A090007	OIL PUMP ASSY. (G ROTOR) ASSEMBLY WITH GEAR	1	
8	A01G050002	WASHER FOR OIL PUMP ASSY.	1	Under Development
9	A01G190004	PIGTAIL OIL PRESSURE SWITCH 501 DSL BSVI	1	NI
10	E07520112	HEXAGON SOCKET COUNTERSUNK HEAD SCREW M6X16	3	
11	A01A090009	PRESSURE RELIEF VALVE ASSY.	1	
12	A01G140003	SPRING PRESSURE RELIEF VALVE	1	
13	A01B140005	BOLT - M14X1.5	1	
14	E07506189	JOINT 14X20X1.5 THICK	1	
15	E04M090004	PISTON FOR RELIEF VALVE	1	Under Development
16	A01B010003	GRUB SCREW- 3/8 BSPT (TAPER)	3	
17	A01B010002	GRUB SCREW - 1/8 BSPT (TAPER)	2	
18	A01G030002	BEARING, MASS BALANCER	1	
19	E9121356	OIL SEAL	1	
20	E50006328	OIL SEAL	1	
21	ESP650DNB022	THRUSTWASHER	1	
22	ESP650DNB027	DOWELPIN(Ã?4X8FORTHRUSTWASHER)	1	
23	E90303028	BEARING NEEDLE	1	
24	E07502802	COLLAR BOLT ROCKER COVER M8X40	16	
25	ESP650DNB012	STUD-LUB OIL ADAPTOR	1	
26	A03G120006	SPIN ON FILTER	1	
27	E43500578	STUD-M8	6	
28	E60009715	PRESSURE SWITCH	1	
29	A01A090005	OIL PICK UP ASSEMBLY (STRAINER)	1	
30	A01S090001	O - RING FOR OIL PICK UP ASSY	1	
31	E50002805	COLLER BOLT M8 X 1.25 X 22	1	

16

Print Date: 07-Apr-2022

PLATE-9

ROCKER COVER, OMS & PIPES

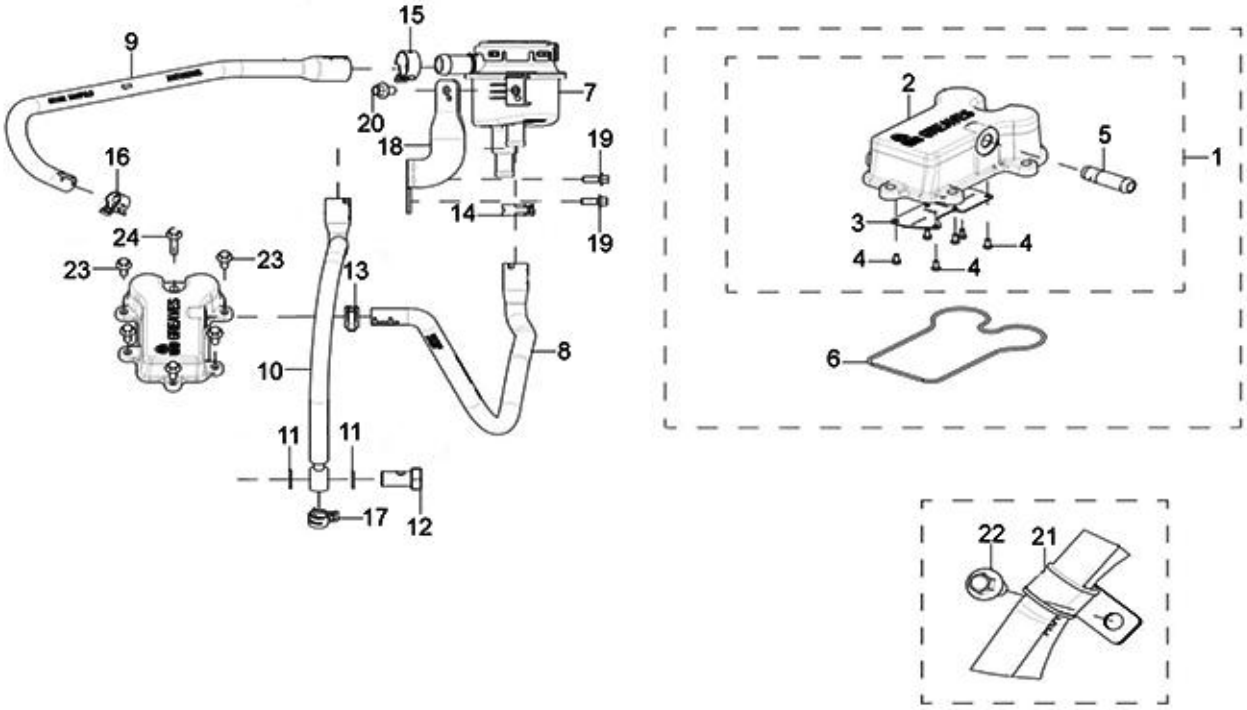
15
9
7
20
18
19
16
14
19
24
23
23
13
8
10
11
11
17
12
2
5
1
3
4
4
4
6
22
21

17

Print Date: 07-Apr-2022

PLATE-9

ROCKER COVER, OMS & PIPES

Fig. No.	Part No.	Description	Qty	Remarks
1	A01A110001	ROCKER COVER ASSEMBLY	1	
3	A01M110003	BREATHER COVER PLATE	1	
4	A01B110001	PHILLIPS HEAD SCREW M3X0.5	6	Under Development
5	ESP650DIN008	STUB TUBE DIA. 11	1	Not Servicable
6	A01S110001	O RING FOR ROCKER COVER	1	
7	ESP650DCH011	OIL MIST SEPERATOR (OMS)	1	
8	A01T090006	HOSE - ROCKER COVER TO OMS	1	
9	A01T090005	HOSE- OMS TO INLET MANIFOLD	1	
10	A01A090011	HOSE - OMS TO OIL RETURN (WITH BANJO)	1	
11	ESP650DNB036	COPPER WASHERM 16	2	
12	ESP650DFP027	BANJO BOLT M16X1.5	1	
13	ESP650DNB032	CLAMP (CTC)(OD-19MM)	1	
14	ESP650DNB033	CLAMP-INLET PIPE OIL SEPERATOR	1	
15	ESP650DNB031	CTC CLAMP	1	
16	ESP650DNB032	CLAMP (CTC)(OD-19MM)	1	
17	A01G140047	CLAMP FOR OMS TO OIL RETURN HOSE	1	Under Development
18	A01G140011	SHEET METAL MOUNTING BKT - OMS MTG.	1	
19	ESP650DNB011	HEX HEAD FLANGE BOLT M6X16	2	
20	E43502817	HEX BOLT FLANGE M8 X 1.25 X 12	1	
21	A01G140021	CLAMP-OMS RETURN HOSE (P CLAMP)	1	
22	E43502817	HEX BOLT FLANGE M8 X 1.25 X 12	1	
23	E07502809	BOLTS	5	
24	A01B140002	BOLT – ROCKER COVER (M6X1X40)	1	
26	E07502811	COLLAR NUT M6 X 1	1	FOR OMS

18

Print Date: 07-Apr-2022

PLATE-10

CRANKSHAFT & CONNECTING ROD

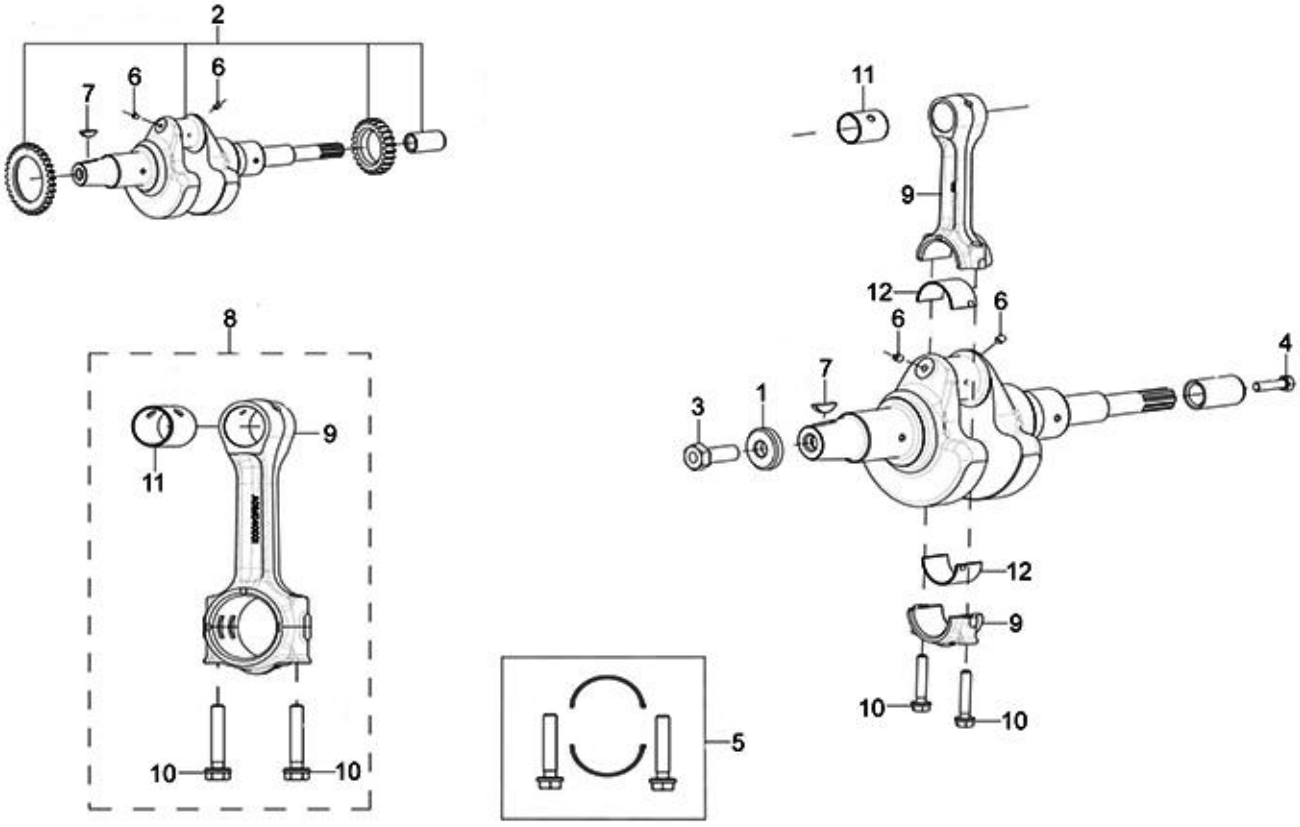
2
6
6
7
11
9
12
6
6
4
7
3
1
8
9
11
12
9
10
10
10
10
5

19

Print Date: 07-Apr-2022

PLATE-10

CRANKSHAFT & CONNECTING ROD

Fig. No.	Part No.	Description	Qty	Remarks
1	E97626043	PLAIN WASHER FLYWHEEL	1	
2	A03A030012	CRANK SHAFT ASSEMBLY WITH WOODRUF KEY	1	
3	E52200434	SCREW HEX. HEAD M14X1.5X35 LH THREAD FLYWHEEL FIXING	1	
4	E47177007	SCREW M8X1.25X30	1	
5	A01A040003	SET - BOLTS WITH BIG END BEARING	1	SET
7	E291228056	KEY F W E	1	
8	A01A040001	CONNECTING ROD ASSEMBLY	1	
10	A01B040001	BOLT-CONNECTING ROD	2	
11	A01M040002	BUSH SMALL END	1	
12	ESP650DCR023	BEARING LARGE END- STD	1	SET
13	ED40208	SLEEVE DOUBLE OIL SEAL	1	

20

Print Date: 07-Apr-2022

PLATE-11

FLYWHEEL RING GEAR AND TONE WHEEL

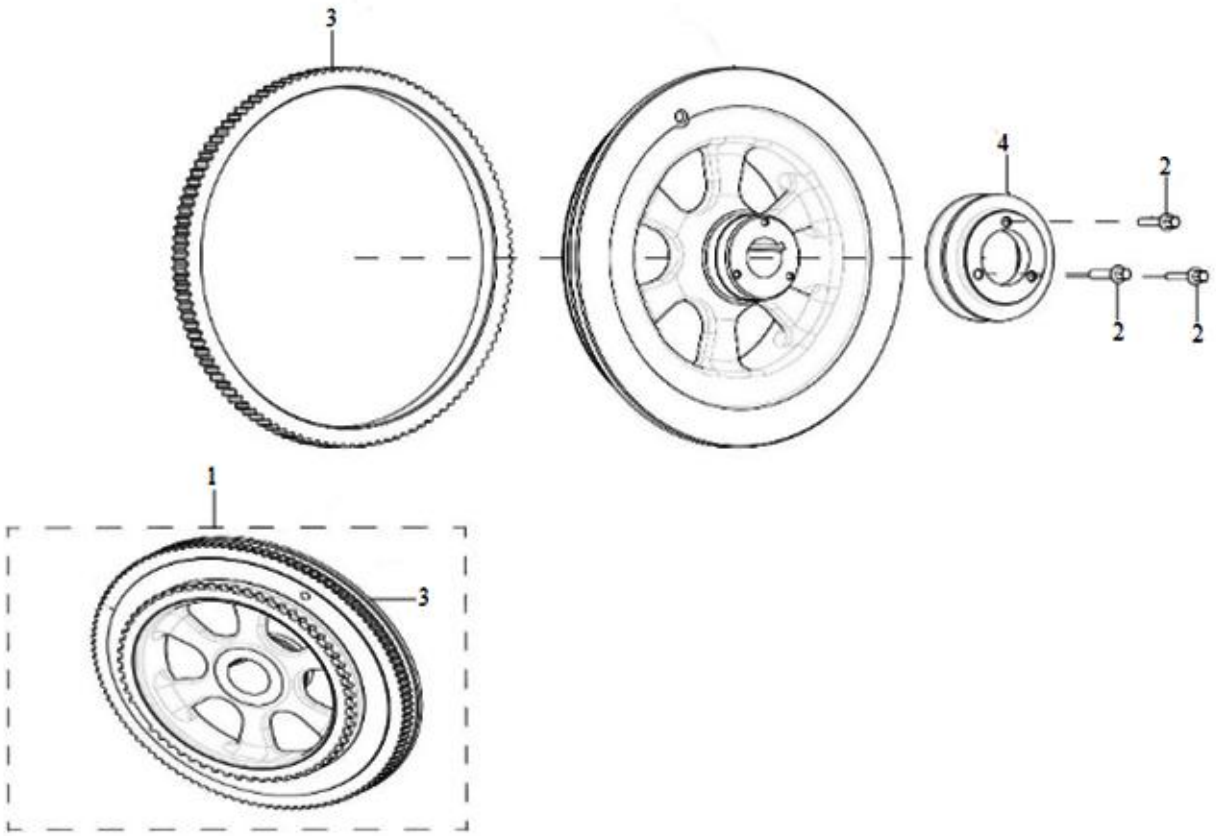
3
4
2
2
2
1
3

21

Print Date: 07-Apr-2022

PLATE-11

FLYWHEEL RING GEAR AND TONE WHEEL

Fig. No.	Part No.	Description	Qty	Remarks
1	A01A030001	FLYWHEEL ASSY WITH TONE WHEEL AND RING GEAR	1	
2	E07502809	BOLTS	3	
3	E07509640	RING GEAR	1	
4	A01M030007	CRANKSHAFT PULLEY V GROOVE	1	

22

Print Date: 07-Apr-2022

PLATE-12

FUEL PUMP, ROCKER LUBRICATION & OIL RETURN PIPES

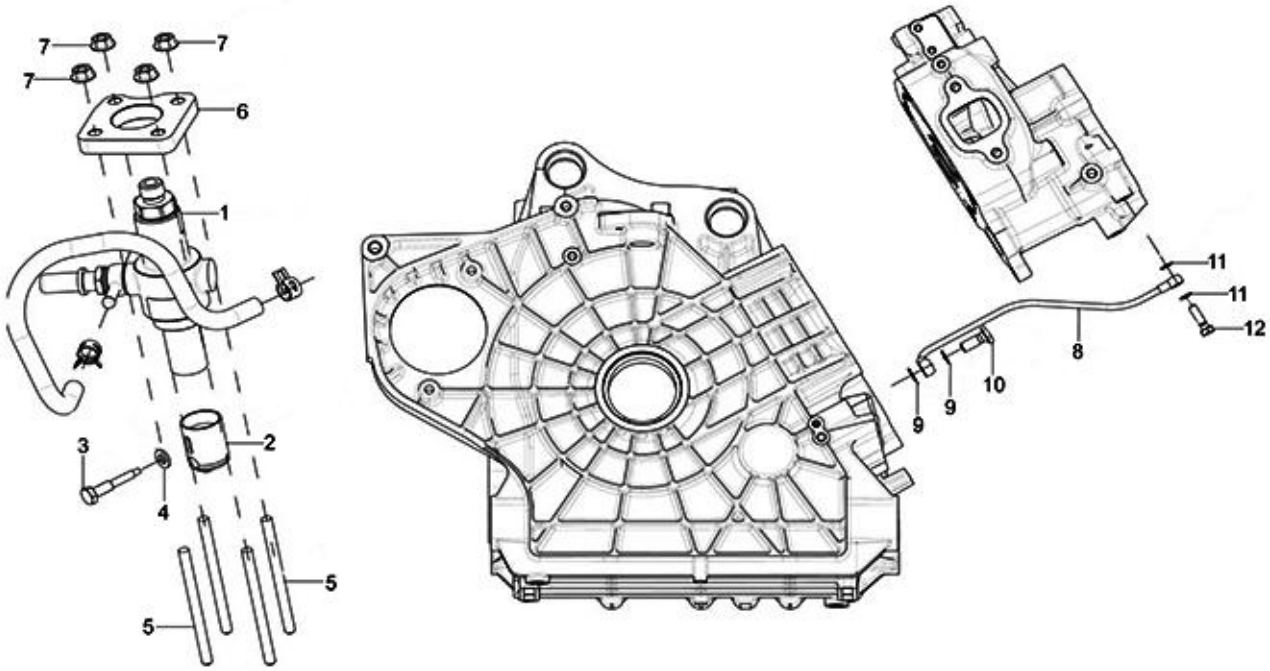
7
7
7
6
1
3
4
2
5
5
11
11
12
8
10
9
9

23

Print Date: 07-Apr-2022

PLATE-12

FUEL PUMP, ROCKER LUBRICATION & OIL RETURN PIPES

Fig. No.	Part No.	Description	Qty	Remarks
1	A01G120006	HIGH PRESSURE PUMP-IMRLS	1	
2	A01G120005	ROLLER TAPPET	1	
3	A01G120001	GUIDING SCREW - FOR TAPPET (FIP-RT)	1	
4	ED40642	WASHER (BSII) (N.I.)	1	
5	ESP650DNB006	STUD C M6X1X70IS:1862-P-10.9	4	
6	A01M120002	MOUNTING FLANGE-FIP	1	
7	E07502811	COLLAR NUT M6 X 1	4	
8	A01A090004	PIPE - ROCKER LUBRICATION	1	
9	E200467003	JOINT	2	
10	E9190056	BANJO BOLT M8X1.25X20	1	
11	E260467001	JOINT	2	
12	ESP650DFP003	BANJO BOLT M6X1X22	1	

24

Print Date: 07-Apr-2022

PLATE-13

HP PIPES, LEAK OFF PIPE

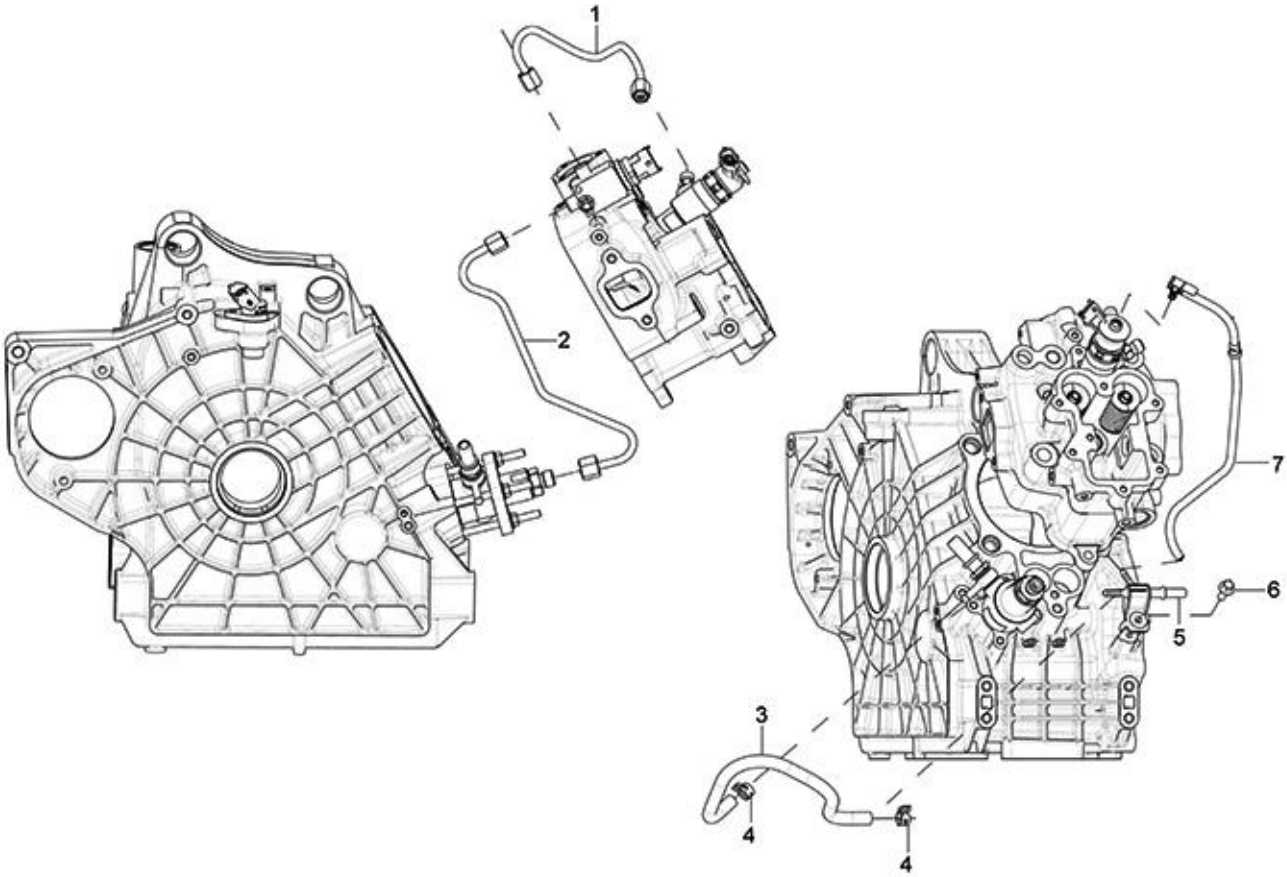
1
2
3
4
4
5
6
7

25

Print Date: 07-Apr-2022

PLATE-13

HP PIPES, LEAK OFF PIPE

Fig. No.	Part No.	Description	Qty	Remarks
1	A01A120004	HIGH PRESSURE PIPE ASM- FDB TO INJECTOR	1	
2	A01A120005	HIGH PRESSURE PIPE ASM-PUMP TO FDB	1	
3	A01T120001	LEAK OFF PIPE - FUEL PUMP TO Y CONNECTOR	1	
4	E87101059	CLAMP CTC(OD11MM)	2	
5	ESP650DFP014	Y CONNECTOR	1	
6	ESP650DNB011	HEX HEAD FLANGE BOLT M6X16	1	
7	A01T120004	FUEL RETURN LINES(FRLS)	1	

26

Print Date: 07-Apr-2022

PLATE-14
CAMSHAFT ASSEMBLY

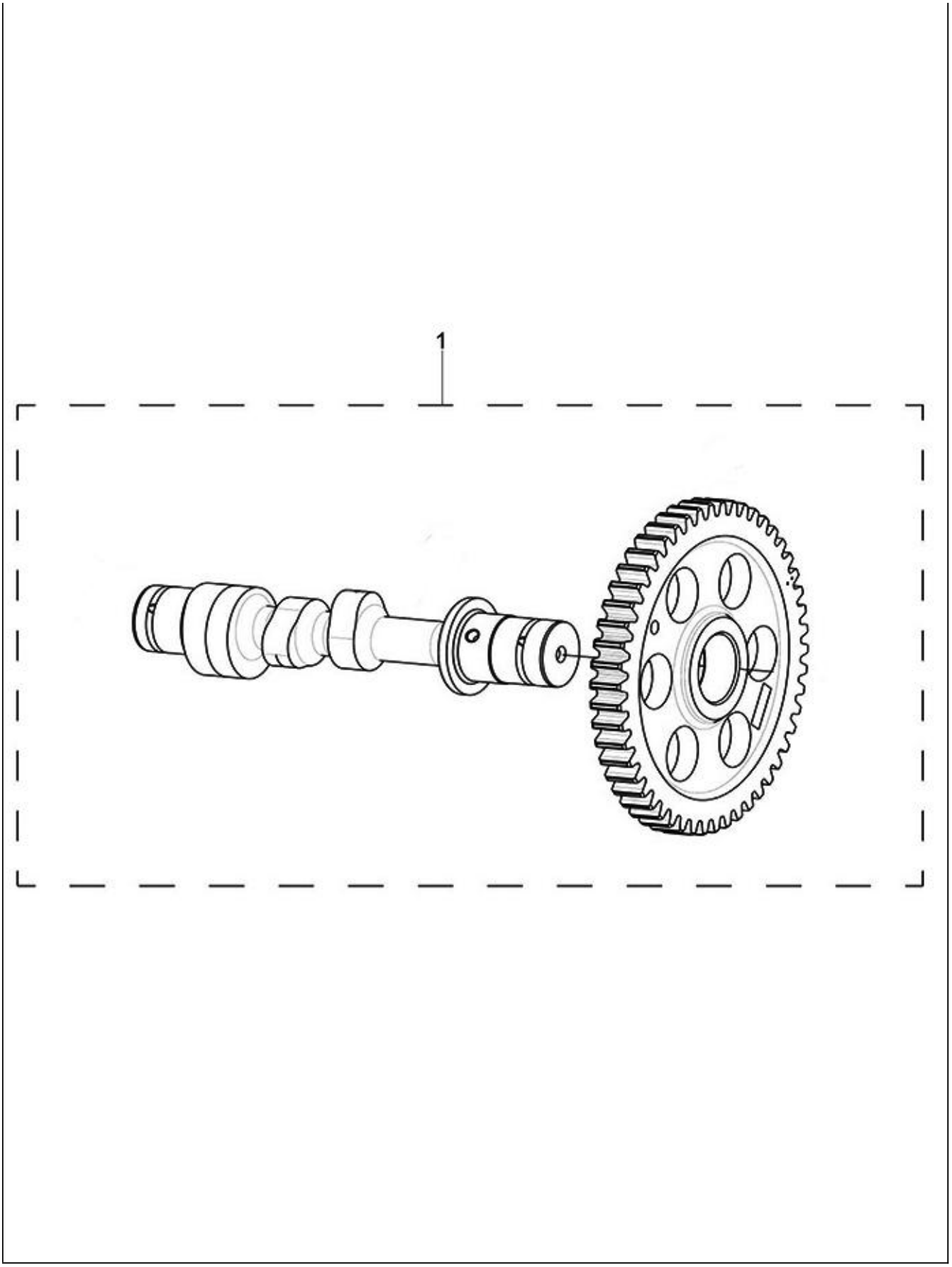
1

27

Print Date: 07-Apr-2022

PLATE-14
CAMSHAFT ASSEMBLY

Fig. No.	Part No.	Description	Qty	Remarks
1	A01A060005	CAMSHAFT ASSEMBLY WITH GEAR	1	

28

Print Date: 07-Apr-2022

PLATE-15

WATER PUMP & WATER PUMP PULLEY

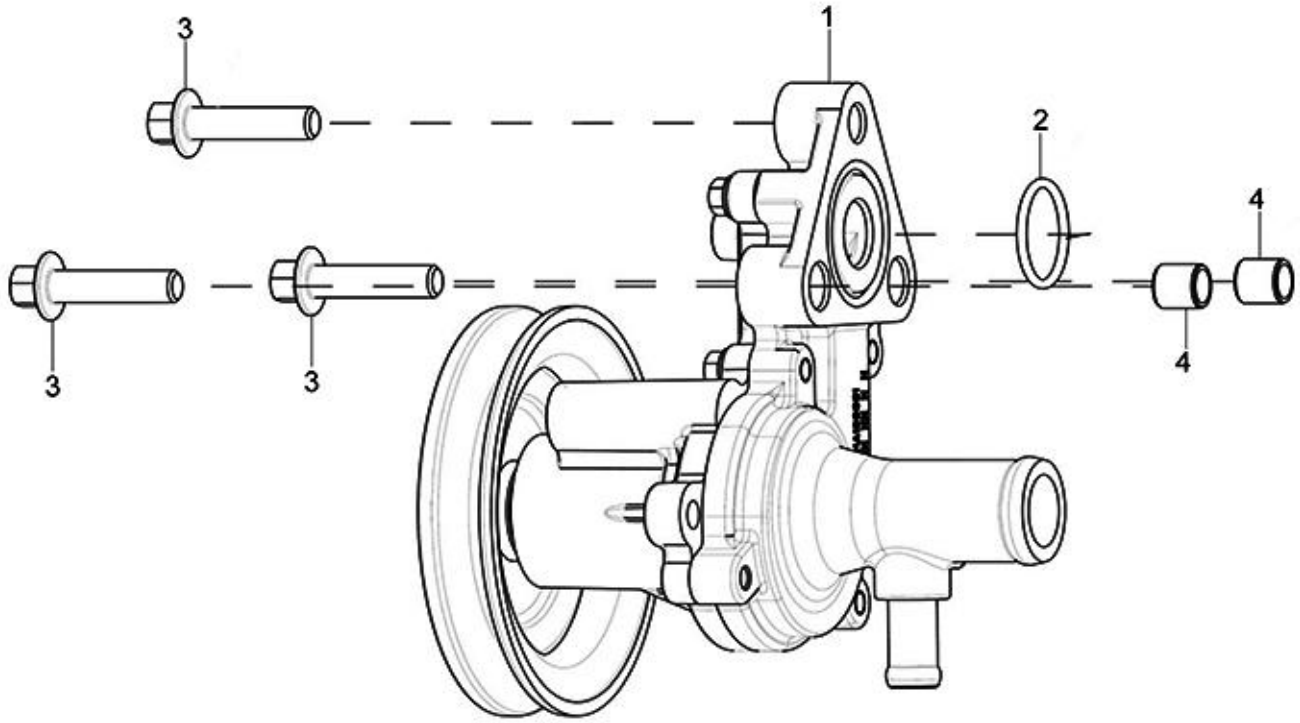
3
1
2
4
3
3
4

29

Print Date: 07-Apr-2022

PLATE-15

WATER PUMP & WATER PUMP PULLEY

Fig. No.	Part No.	Description	Qty	Remarks
1	A01A100001	WATER PUMP ASS. WITH PULLEY	1	
2	A01S100001	O RING	1	
3	E07502804	COLLER BOLT M8 X 1.25 X 30	3	
4	A01M010008	HOLLOW DOWEL – DIA. 11	2	

30

Print Date: 07-Apr-2022

PLATE-16

STARTER MOTOR, ALTERNATOR & V-BELT

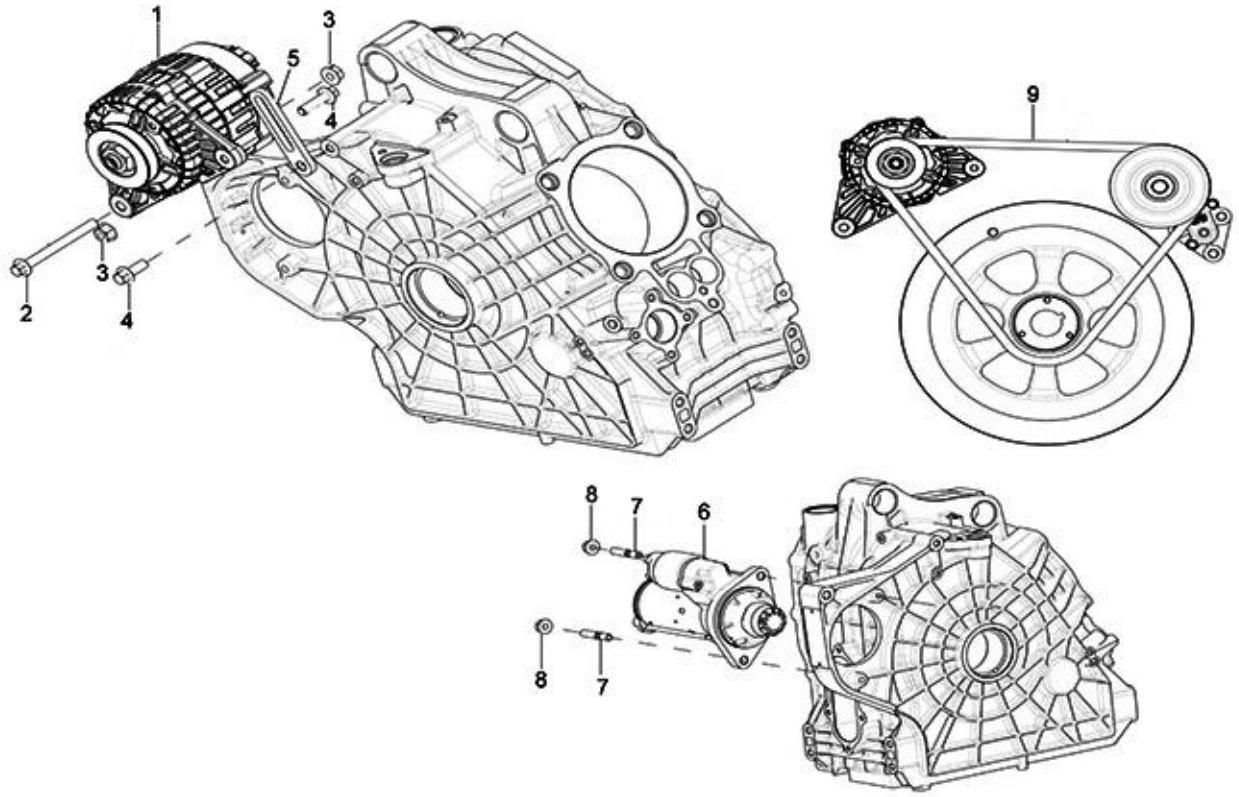
1
3
5
4
9
3
2
4
8
7
6
8
7

31

Print Date: 07-Apr-2022

PLATE-16

STARTER MOTOR, ALTERNATOR & V-BELT

Fig. No.	Part No.	Description	Qty	Remarks
1	A01G140009	ALTERNATOR (WITHV GROOVE PULLEY)	1	
2	A01B140001	BOLT FOR ALTERNATOR (M8X1.25X85)	1	
3	E07502810	COLLAR NUT M8 X 1.25	2	
4	E50002806	COLLAR BOLT M8X1.25X25X22	2	
5	A01M140002	TENTIONER BRACKET	1	
6	A01G140002	STARTOR MOTOR	1	
7	E07500520	STUD M 10 X 1.5 X 44	2	
8	E07502810	COLLAR NUT M8 X 1.25	2	
9	ESP650DST004	BELT (LENGTH=991MM)	1	

32

Print Date: 07-Apr-2022

PLATE-17
PERIPHERAL PART

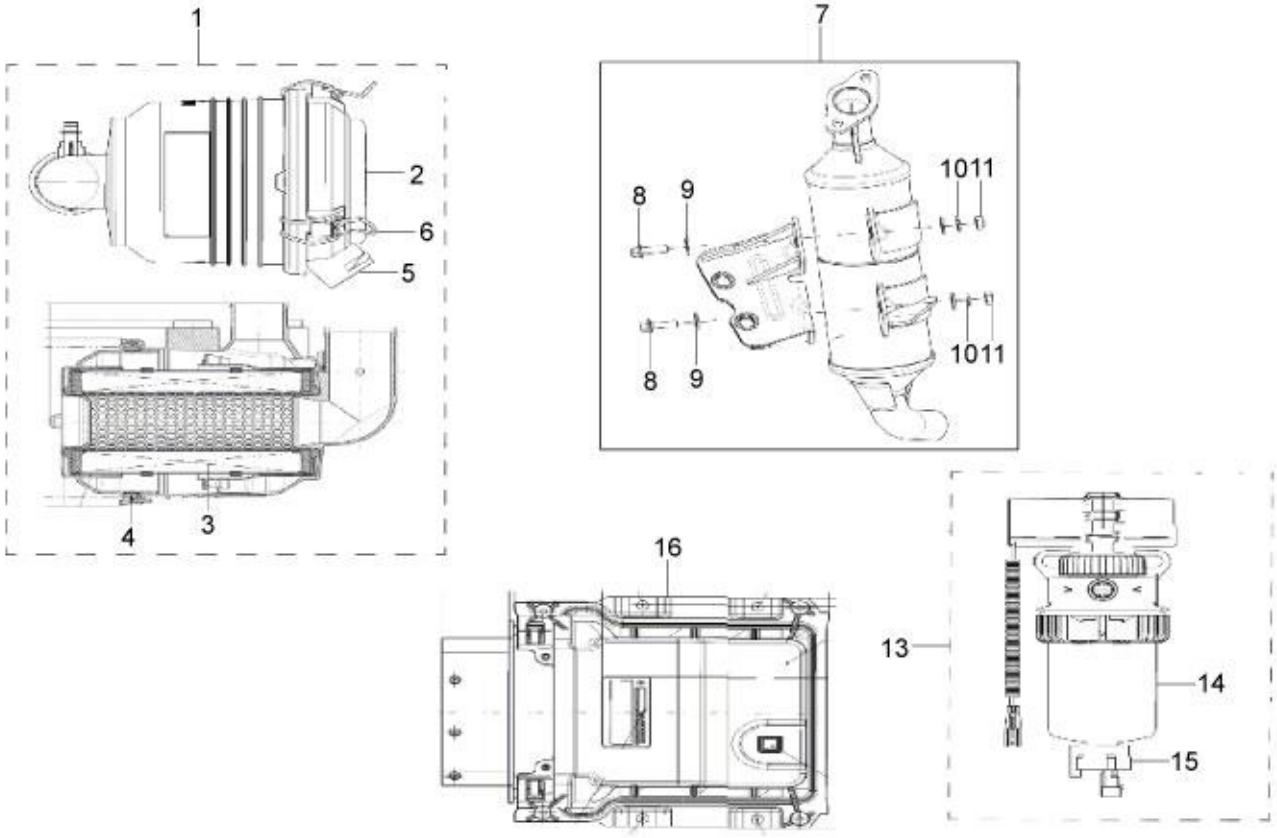
1
2
6
5
4
3
7
8
9
1011
8
9
1011
16
13
14
15

33

Print Date: 07-Apr-2022

PLATE-17

PERIPHERAL PART

Fig. No.	Part No.	Description	Qty	Remarks
1	A01A140002	AIR FILTER ASSEMBLY	1	
2	A01G140035	AIR FILTER COVER	1	
3	A01G140013	AIR FILTER ELEMENT ASSEMBLY	1	
4	A01S140001	AIR FILTER COVER GASKET	1	Under Development
5	A01G140036	AIR FILTER DUST VALVE	1	
6	A01G140037	AIR FILTER COVER CLAMP	1	
7	A01A210011	EXHAUST AFTER TREATMENT SYSTEM	1	
8	A01B140004	BOLT- EXH. MANIFOLD AND EGR PIPE (M8X25)	2	
9	A01B210001	PLAIN WASHER	4	Under Development
10	E1756507	SPRING WASHER M8	2	
11	E50000225	NUT SS	2	
12	A01R210001	MOUNTING BRACKET ASSEMBLY (SUS 409 /4 THK)	1	Under Development
13	A01G120014	INLINE PUMP WITH INTEGRATED FUEL FILTER	1	
14	A01G120009	FILTER ELEMENT ASSEMBLY	1	
15	A01G120010	WIF ASY- (FUEL FILTER DRAIN PLUG+SENSOR)	1	
16	A01G190006	ECU	1	
17	A01S120002	DUST SEAL FOR INLINE PUMP _501 DSL BSVI	1	NI (Under Development)
18	A01G120020	PLUG AIR VENT+O RING FOR INL PUMP DSLBS6	1	NI (Under Development)
19	A01G120021	RETAINER RING FOR INLINE PUMP _DSL BS6	1	NI (Under Development)
20	A01S120001	INT. O-RING FOR INLINE PUMP 501 DSL BS6	1	NI (Under Development)

34

Print Date: 07-Apr-2022

PLATE-18

Air Filter Assly & Air intake system

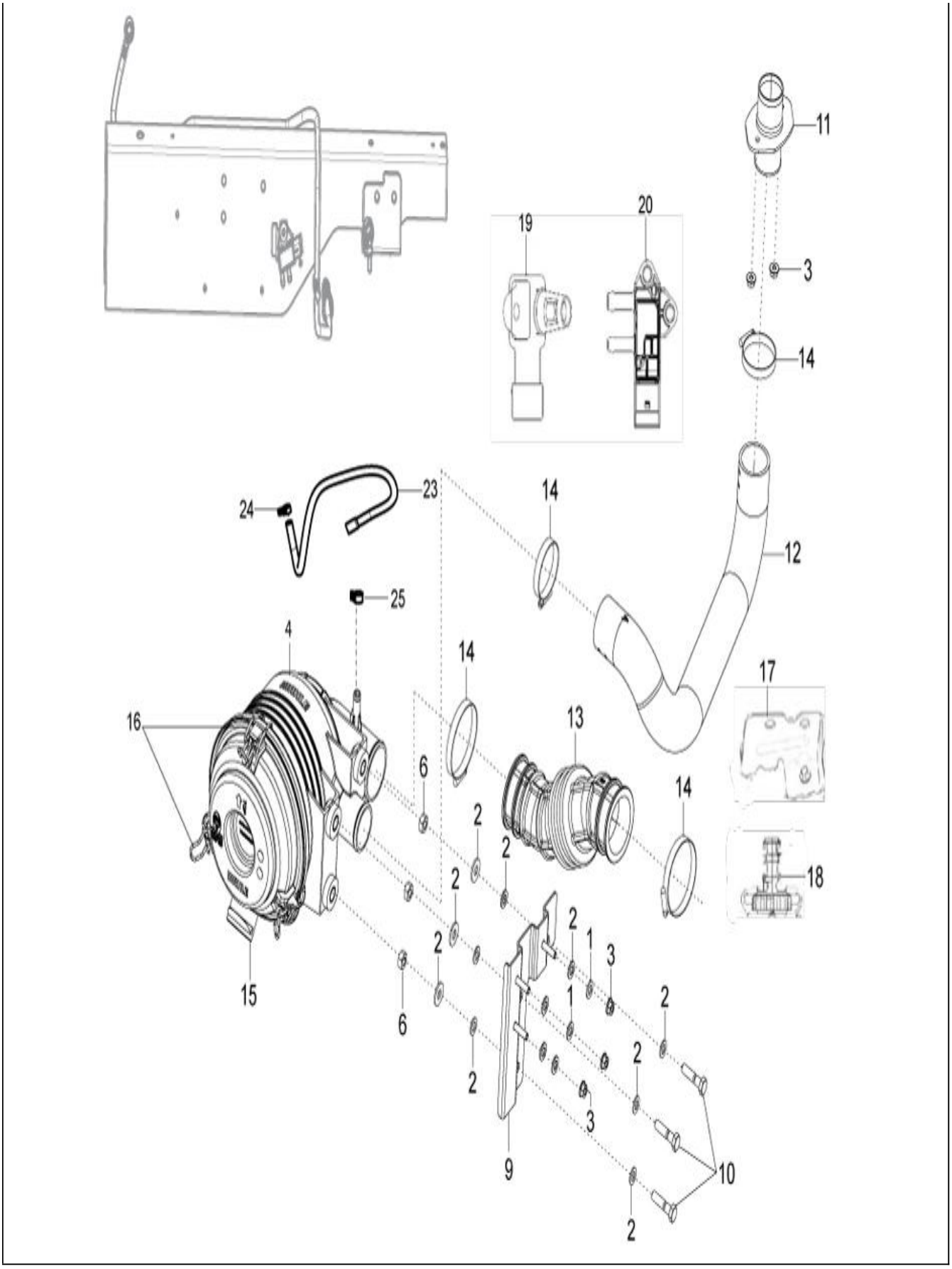
11
19
20
3
14
23
24
14
12
25
4
14
17
16
13
6
14
2
2
18
2
2
1
3
15
6
1
2
2
2
3
9
10
2

35

Print Date: 07-Apr-2022

PLATE-18

Air Filter Assly & Air intake system

Fig. No.	Part No.	Description	Qty	Remarks
1	016408	SPRING WASHER	9	
2	3058	PLAIN WASHER 15X8.4X1.5	9	
3	261323	NUT	5	
4	A01A140002	AIR FILTER ASSEMBLY	1	
5	A01G140013	AIR FILTER ELEMENT ASSEMBLY	1	NI
6	20108	HEX NUT M8	3	
7	A01G140035	AIR FILTER COVER	6	
8	A01S140001	AIR FILTER COVER GASKET	1	Under Development
9	6A000253	AIR FILTER MOUNTING BRACKET	1	
10	B002486	BOLT M8 X 35 6G CL 12.9	3	
11	6A000071	FLANGE-AIR FILTER	1	
12	6A000036	HOSE- LONG MEMBER TO FILTER	1	
13	6A000037	HOSE - AIR FILTER TO ENGINE INTAKE	1	
14	604756	HOSE CLIP	4	
15	A01G140036	AIR FILTER DUST VALVE	1	
16	A01G140037	AIR FILTER COVER CLAMP	3	
17	A01A210011	EXHAUST AFTER TREATMENT SYSTEM	1	
18	A01G120014	INLINE PUMP WITH INTEGRATED FUEL FILTER	1	
19	A01G200002	AMBIENT TEMP.SENSOR	1	
20	A01G200001	DELTA P-SENSOR	1	Not required (Discontinued)
23	6A001087	INST TUBE, AIR FILTER TO DELTA-P SENSOR	1	Not Servicable
24	662571	HOSE CLAMP	2	
25	632109	HOSE CLAMP BRAKE PIPE	1	

36

Print Date: 07-Apr-2022

PLATE-19

Radiator Assembely & Cooling System

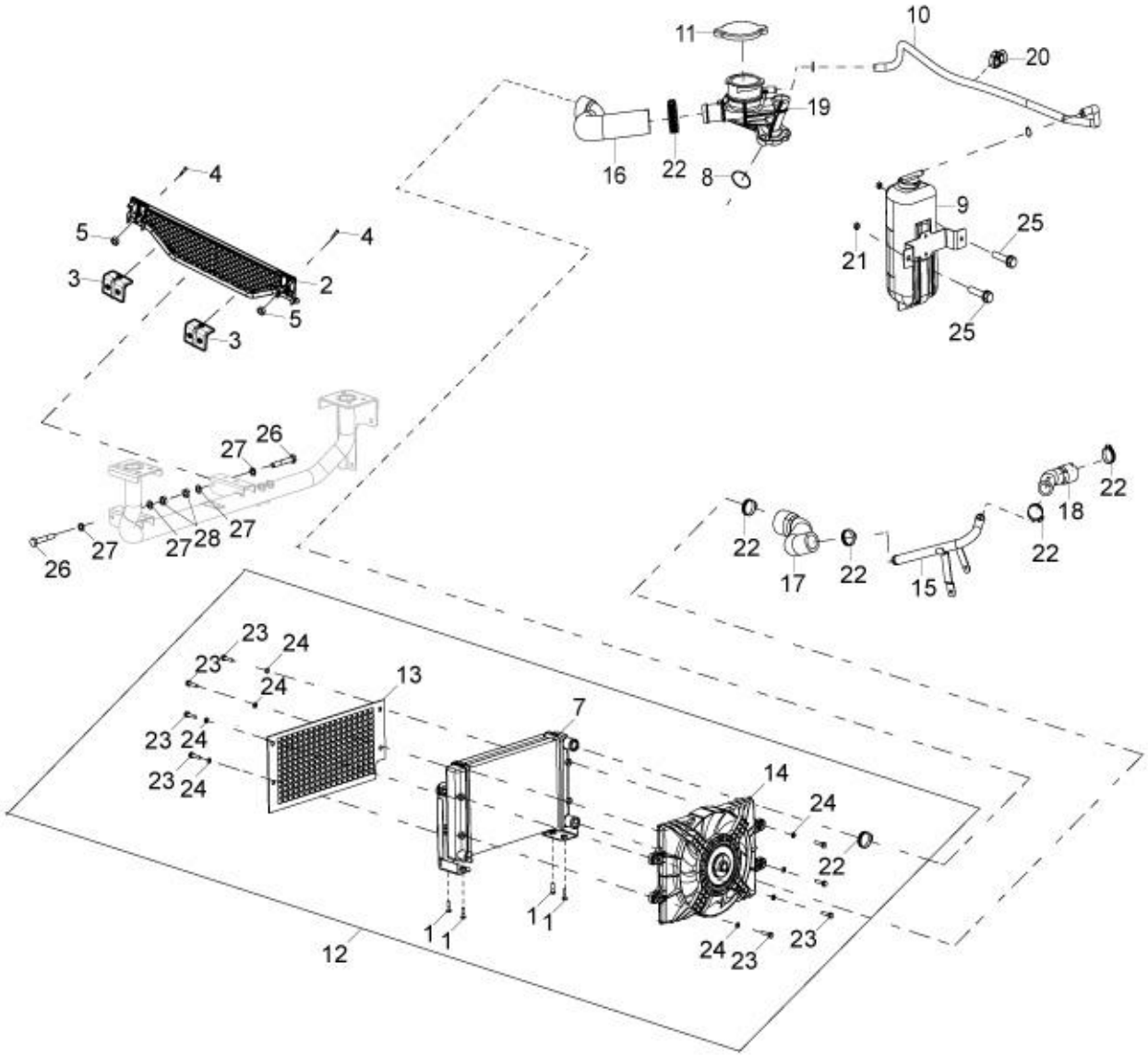
11
10
20
19
16
22
8
9
25
21
25
4
5
4
3
2
5
3
26
27
22
18
22
22
17
22
15
22
26
27
27
28
27
23
24
23
24
13
7
23
24
23
24
14
24
22
1
1
1
1
12
24
23
23

37

Print Date: 07-Apr-2022

PLATE-19

Radiator Assembely & Cooling System

Fig. No.	Part No.	Description	Qty	Remarks
1	31088	HEX HD SCREW M6 X 16 CL 8.8 (811061623)	4	
2	6B000552	REAR VISUAL BARRIER ASSLY	1	
3	6B000573	VISUAL BARRIER MOUNT BRACKET	2	
4	652563	HEX HEAD SCREW M8 X 60 CL 8.8 W/SP ,PL	4	
5	15335	HEX HD NUT M8	2	
6	KIT96051R	KIT REAR VISUAL BARRIER FIT._501 DSL BS6	1	CONSISTS OF 3,4 & 5
7	6A001182	CORE WITH TANK ASSEMBLY	1	App.for TATA TOYO,Cut off-MBX0006EBYM069571
7	6A000864	CORE WITH TANK ASSEMBLY	1	App.for SM AUTO Old Radiator
8	6A000349	SEAL RING (O-RING)	1	
9	6A000357	COOLANT TANK	1	App.for SM AUTO Old Radiator
9	6A001583	COOLANT RESERVOIR TANK ASSLY	1	App.for TATA TOYO,Cut off-MBX0006EBYM069571
10	6A000353	HOSE (COOLANT RECOVERY TANK TO FILLER)	1	SM Auto
10	6A001584	DEAERATION HOSE	1	App.for TATA TOYO,Cut off-MBX0006EBYM069571
11	6A000557	PRESSURE CAP	1	
12	6A000238	RADIATOR	1	App.for SM AUTO Old Radiator
12	6A001143	RADIATOR ASSEMBLY	1	App.for TATA TOYO,Cut off-MBX0006EBYM069571
13	B042656	RADIATOR GUARD	1	
14	6A001484	RADIATOR FAN MOTOR SHROUD ASSEMBLY	1	App.for SM AUTO Old Radiator
14	6A001180	FAN MOTOR SHROUD ASSEMBLY	1	App.for TATA TOYO,Cut off-MBX0006EBYM069571
15	6A000343	COOLANT PIPE ASSY	1	
16	6A000279	RADIATOR INLET HOSE	1	App.for SM AUTO Old Radiator
16	6A001359	COOLANT HOSE (RADIATOR INLET)	1	App.for TATA TOYO,Cut off-MBX0006EBYM069571
17	6A000280	RADIATOR OUTLET HOSE	1	App.for SM AUTO Old Radiator
17	6A001360	COOLANT HOSE (RADIATOR OUTLET)	1	App.for TATA TOYO,Cut off-MBX0006EBYM069571
18	6A000281	ENGINE INLET HOSE	1	
19	6A000282	COOLANT FILLER UNIT	1	
20	B076007	PIPE CLIP 1 WAY	1	
21	20106	HEX NUT M6	2	
22	662465	HOSE CLAMP	6	
23	6A000827	SELF TAPPING SCREW	8	
24	3056	PLAIN WASHER M6 OD12	8	
25	31088	HEX HD SCREW M6 X 16 CL 8.8 (811061623)	2	
26	652563	HEX HEAD SCREW M8 X 60 CL 8.8 W/SP ,PL	2	
27	3058	PLAIN WASHER 15X8.4X1.5	4	
28	20108	HEX NUT M8	2	

38

Print Date: 07-Apr-2022

PLATE-19

Radiator Assembely & Cooling System

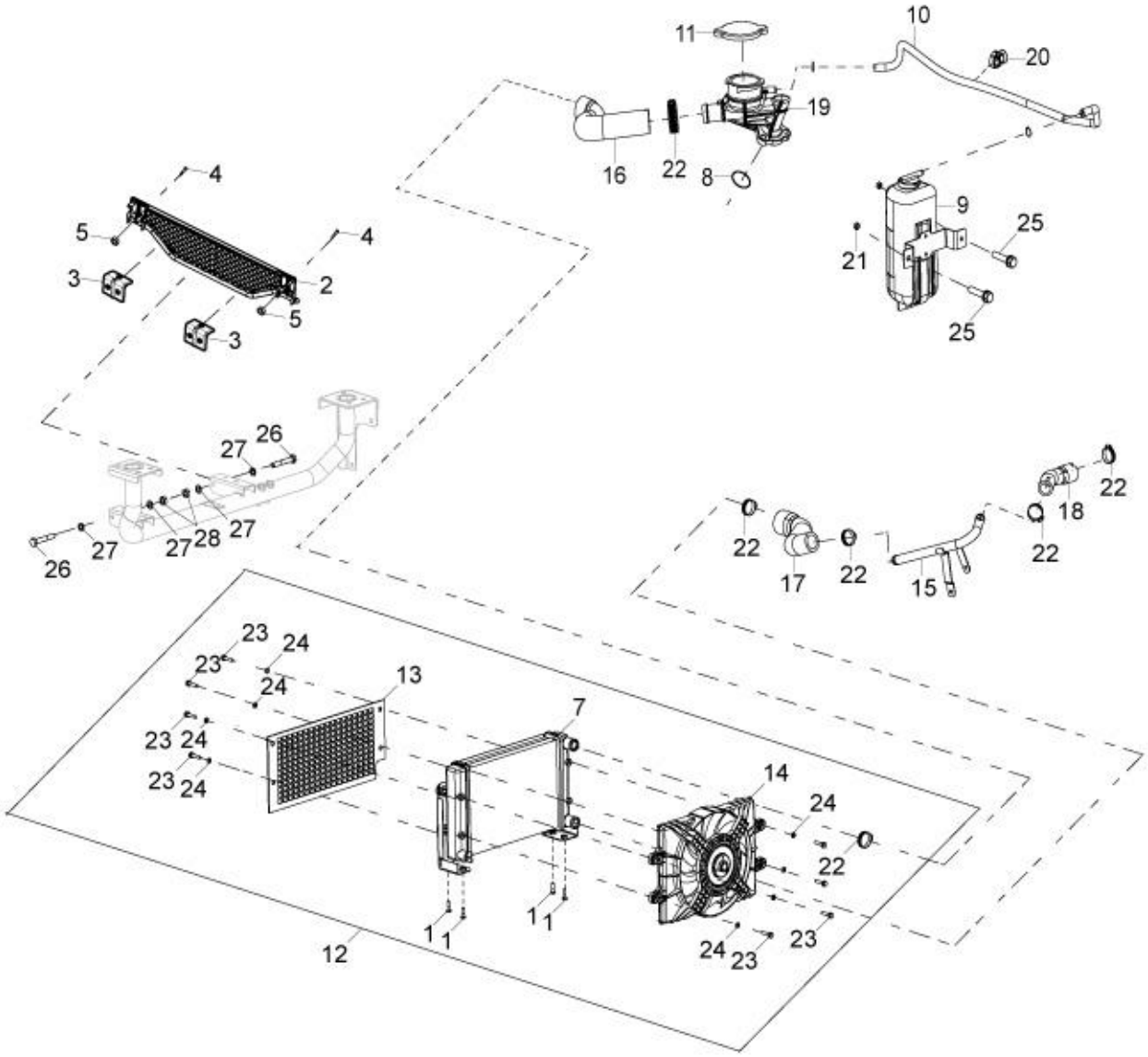
11
10
20
19
16
22
8
9
25
21
25
4
5
4
3
2
5
3
26
27
22
18
22
22
17
22
15
22
26
27
27
28
27
23
24
23
24
13
7
23
24
23
24
14
24
22
1
1
1
1
12
24
23
23

39

Print Date: 07-Apr-2022

PLATE-19

Radiator Assembely & Cooling System

Fig. No.	Part No.	Description	Qty	Remarks
29	940211	SCREW M4 (FOR FAN MOTOR)	1	NI
30	940212	SPRING WASHER (FOR FAN MOTOR)	1	NI
31	940038	RADIATOR DRAIN PLUG WITH RING	1	NI,for SM Auto

40

Print Date: 07-Apr-2022

PLATE-20
fuel tank assly. & Pipes

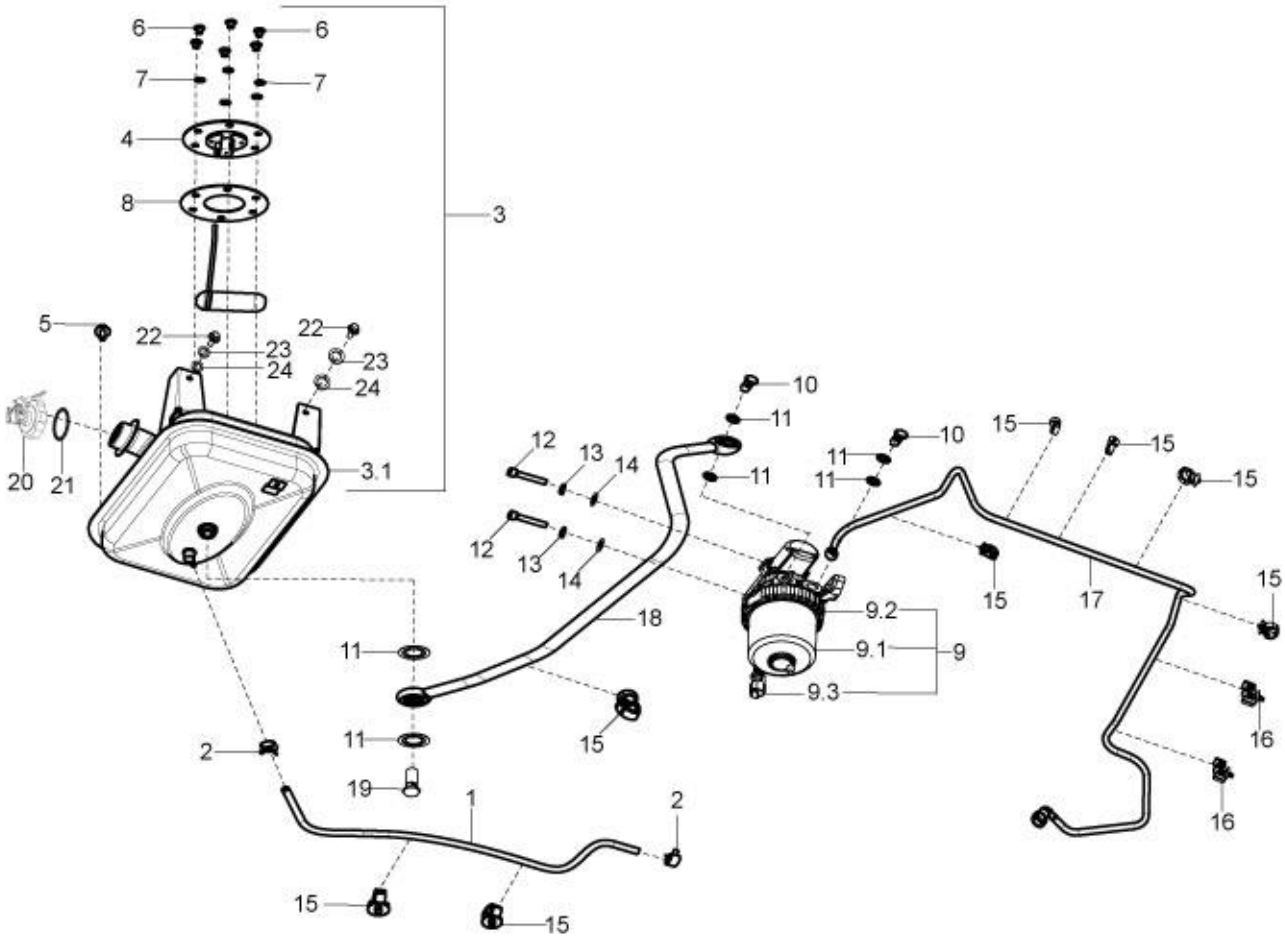
6
6
7
7
4
8
3
5
22
22
23
23
24
24
20
21
3.1
10
11
12
13
14
11
11
10
15
15
15
12
13
14
15
17
15
18
9.2
9.1
9
9.3
11
15
16
2
11
19
1
2
16
15
15

41

Print Date: 07-Apr-2022

PLATE-20

fuel tank assly. & Pipes

Fig. No.	Part No.	Description	Qty	Remarks
1	6A000618	HOSE, FUEL OVERFLOW	1	
2	662571	HOSE CLAMP	2	
3	6A000528	ASSY. FUEL TANK WITH TANK UNIT	1	With tank unit
3.1	6A000527	ASSY. FUEL TANK W/O TANK UNIT	1	Without tank unit
4	925888	RUBBER GASKET FOR TANK UNIT	1	
5	D9166140616	BOLT, W/WASHER	4	
6	31056	HEX HEAD SCREW M5 X 12 CL. 8.8	6	
7	16405	SPRING WASHER M5	6	
8	567878R	TANK UNIT	1	
9	A01G120014	INLINE PUMP WITH INTEGRATED FUEL FILTER	1	
9.1	A01G120009	FILTER ELEMENT ASSEMBLY	1	
9.2	A01G120007	HEADER ASY WITH LIFT PUMP	1	Not serviceable
9.3	A01G120010	WIF ASY- (FUEL FILTER DRAIN PLUG+SENSOR)	1	
10	604909	BANJO BOLT (M14X1.5)	2	
11	6A000608	BONDED SEAL WASHER, M14	6	
12	6A001045	SOCKET HEAD SCREW (ALLEN SCREW) M10X1.5	2	
13	16410	SPRING WASHER	2	
14	286328	PLAIN WASHER 20X10.2X2	2	
15	B076007	PIPE CLIP 1 WAY	8	
16	6A000301	CLIP 2-WAY FOR PIPE OD 8-10	2	
17	6A000685	FUEL LINE, FILTER TO FIP	1	
17	6A001726	FUEL LINE, FILTER TO FIP	1	Appli,from cha.cut off no.MBX0006HF1B163421
18	6A000686	FUEL LINE, TANK TO FILTER	1	
19	6A000278	ASSY BANJO BOLT (M14) WITH STRAINER	1	
20	B024170	DIESEL TANK CAP WITH KEY	1	
21	644299	COLLAR	1	
22	31088	HEX HD SCREW M6 X 16 CL 8.8 (811061623)	3	
23	013880	PLAIN WASHER	3	
24	016406	SPRING WASHER	3	

42

Print Date: 07-Apr-2022

PLATE-21

ALUMINIUM CLUTCH ASSEMBLY

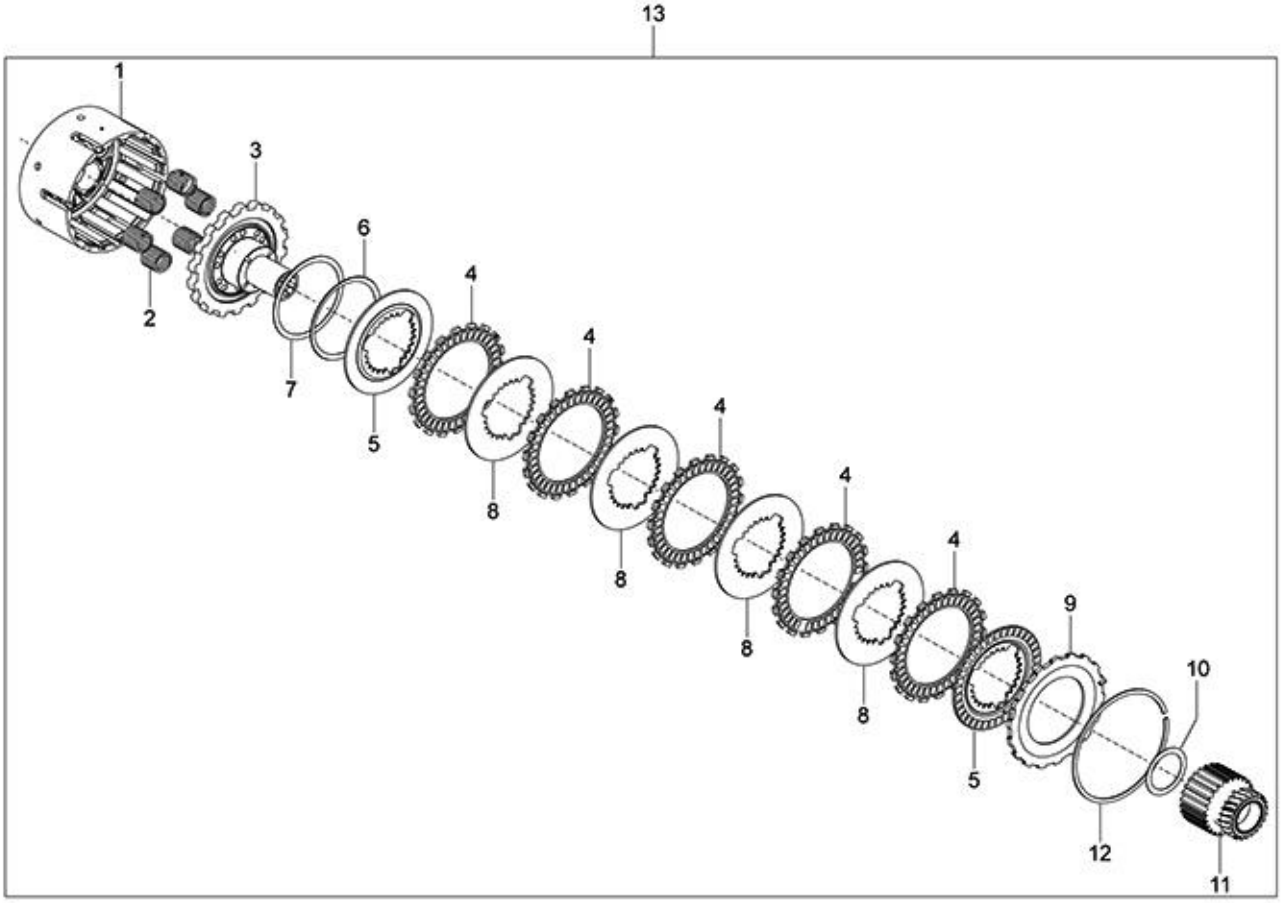
13
1
3
6
4
4
4
4
4
2
7
5
8
8
8
8
9
10
5
12
11

43

Print Date: 07-Apr-2022

PLATE-21

ALUMINIUM CLUTCH ASSEMBLY

Fig. No.	Part No.	Description	Qty	Remarks
1	1A017153	CLUTCH HOUSING	1	
2	1A017637	COMPRESSION SPRING	6	
3	1A017640	CLUTCH FLANGE WITH SHAFT.	1	
4	1A017155	DRIVER PLATE	5	
5	1A017156	DRIVEN PLATE	2	
6	1A017157	DAMPER SPRING	1	
7	1A017158	DAMPER SPRING RETAINER	1	
8	1A017159	DRIVEN PLATE	4	
9	1A017160	CLUTCH LOCK PLATE	1	
10	1A017161	SHIM WASHER	1	
11	1A017165	ENGINE GEAR WITH BUSH	1	
12	1A017163	RETAINING RING	1	
13	1A014338	COMPLETE CLUTCH ASSY	1	
14	KIT95117R	KIT ALUMINIUM CLUTCH PLATES DSL BS4/BS6	1	Complete Clutch Plate Set (NI)

44

Print Date: 07-Apr-2022

PLATE-22

CLUTCH & COVER ASSEMBLY (FOR ALUMINIUM CLUTCH)

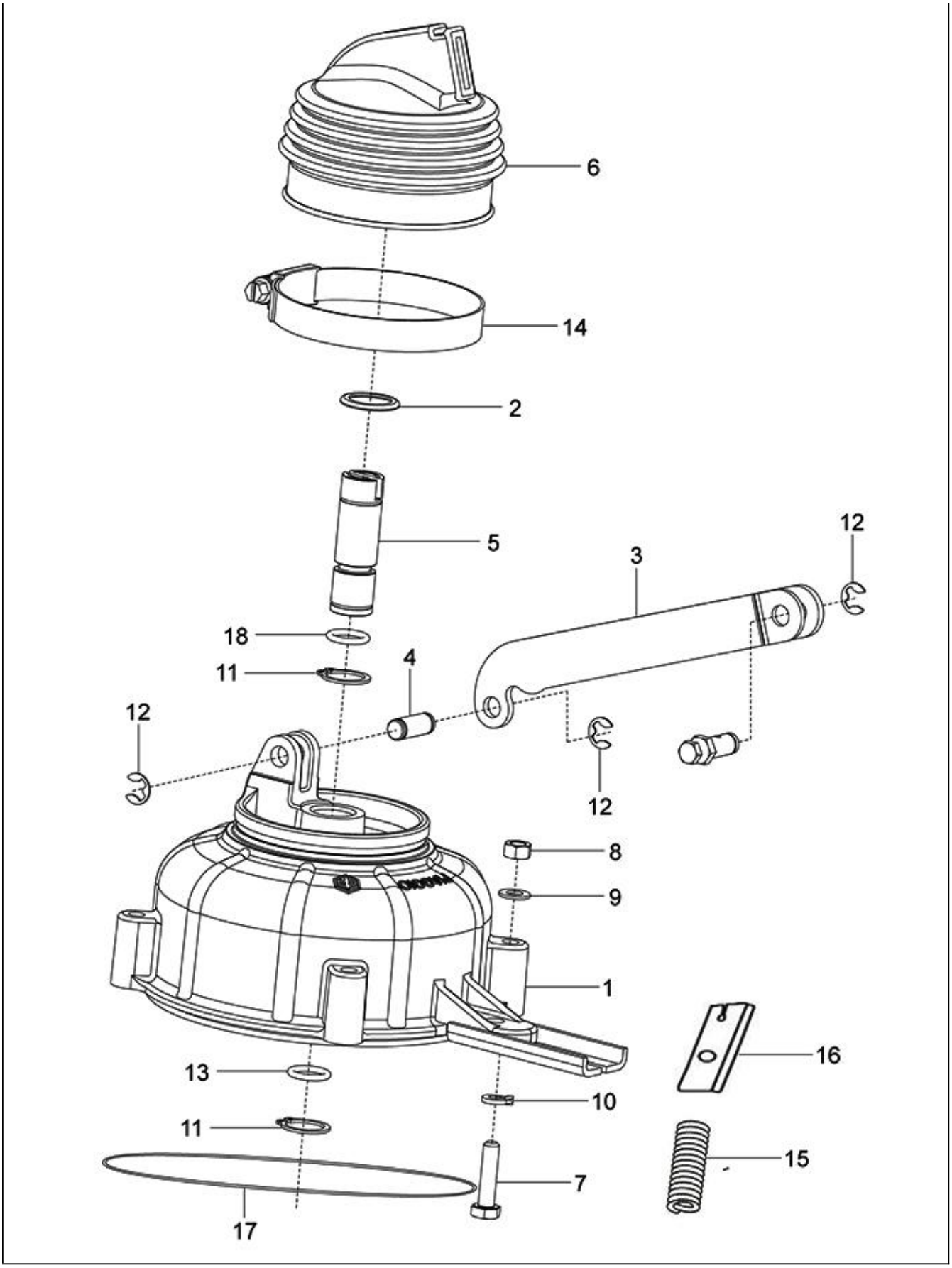
6
14
2
5
12
3
18
11
4
12
12
8
9
1
16
13
10
11
15
7
17

45

Print Date: 07-Apr-2022

PLATE-22

CLUTCH & COVER ASSEMBLY (FOR ALUMINIUM CLUTCH)

Fig. No.	Part No.	Description	Qty	Remarks
1	1F000830	CLUTCH COVER	1	
2	120164019	RETAINING PLATE	1	
3	127460010	LINK ASSLY - CLUTCH (IMPROVED)	1	for old Clutch cable
3	1A019307	CLUTCH LEVER WITH I.P.	1	Appli.for Modi.Clutch Cable (60mm Length)
4	127013013	PIN CLUTCH	1	
5	1A014753	PLUNGER SHAFT	1	
6	127012019	BELLOW CLUTCH ACTUATING	1	
7	31092	HEX. HD SCREW M6X25	1	
8	20106	HEX NUT M6	4	
9	3056	PLAIN WASHER M6 OD12	4	
10	016406	SPRING WASHER	1	
11	842001600	CIRCLIP DIA.16(EXT)	1	
12	843000809	CIRCLIP DIA.8(EXT) TYPE C	2	
13	B019220	O- RING (PLUNGER SHAFT)	2	
14	120170018	HOSE CLIP - CLUTCH COVER BELOW	1	
15	127185012	SPRING - CLUTCH COVER	1	
16	127471019	BRACKET CLUTCH CABLE GUIDE	1	for old Clutch cable
16	1A019644	CLUTCH CABLE BRACKET	1	Appli.for Modi.Clutch Cable (60mm Length)
17	825123207	O - RING CLUTCH COVER	1	
19	B016956	DEEP GROOVE BALL BEARING	1	NI
20	1A007179	SPACER	1	NI
21	652124	SPACER WASHER-CLUTCH	1	NI
22	B018678	SCREW M8X30	1	NI
23	1A006634	BELLEVILLE WASHER	1	NI

46

Print Date: 07-Apr-2022

PLATE-23

main_housing_fare meter housing & Speedo drive

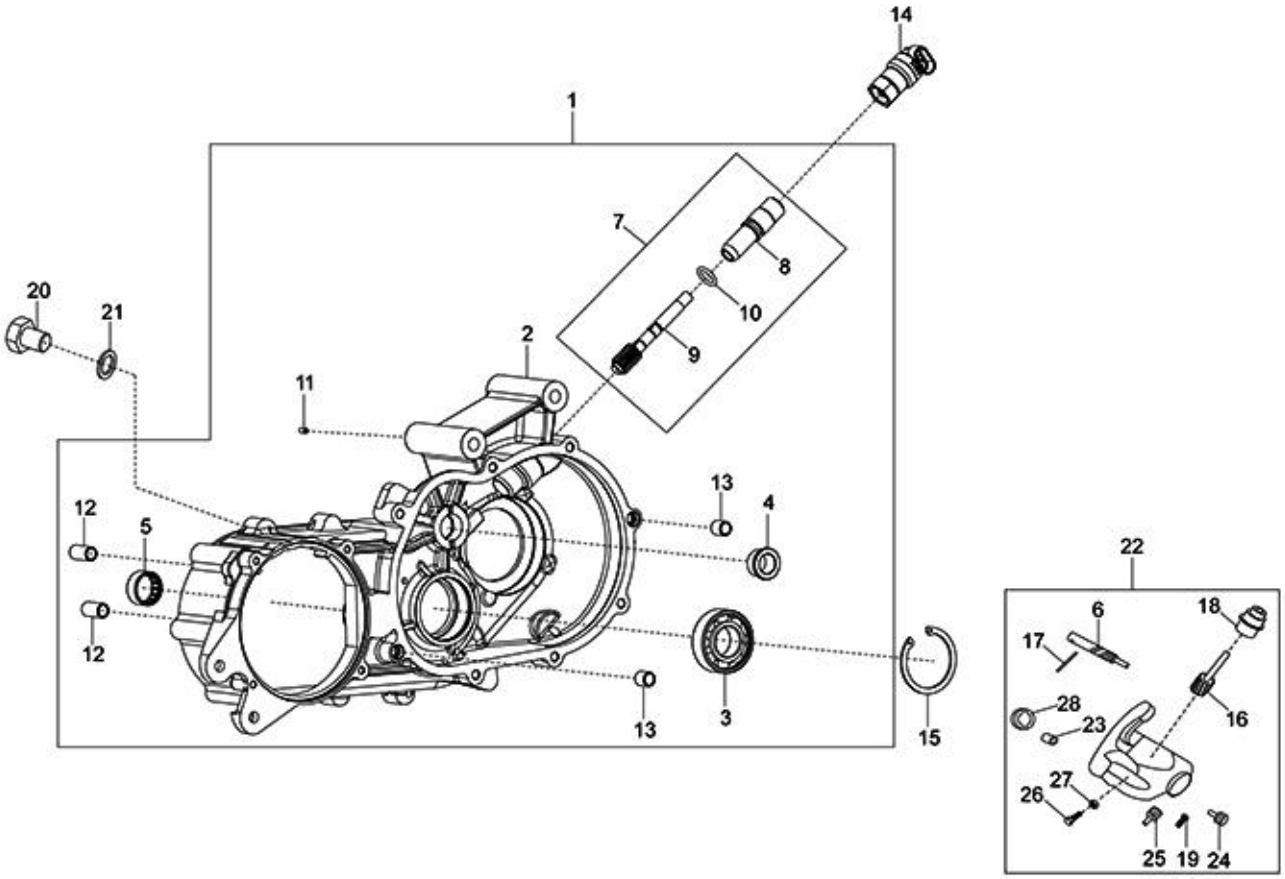
14
1
7
8
10
9
20
21
2
11
13
4
12
5
12
13
3
15
22
6
18
17
28
23
16
27
26
25
19
24

47

Print Date: 07-Apr-2022

PLATE-23

main_housing_fare meter housing & Speedo drive

Fig. No.	Part No.	Description	Qty	Remarks
1	CM305001	GEARBOX ASSEMBLY APÃ? 501 CARGO	1	NI,LDx / LDX+ & Dx
2	1A015742	MAIN HOUSING	1	
3	1A013347	BALL BEARING (25X52X15)	1	
4	B042486	BUSH	1	
5	884222808	NEEDLE BUSH 22X28X12	1	
6	124121015	FARE METER PINION	1	NOT APPLICABLE FOR CARGO
7	SP1A013346	SPEEDOMETER ASSEMBLY	1	
8	1A013345	SPEEDOMETER SUPPORT	1	
9	1A013344	SPEEDOMETER DRIVEN GEAR	1	
9.1	1A017708	THRUST RING	1	FOR SPEEDOMETER GEAR SHAFT
10	1F000626	O-RING	1	
11	1F000631	HEXAG. HEAD SCREW	1	
12	127102010	HOLLOW DOWEL (G. BOX ESC)	2	
13	120203011	HOLLOW DOWEL - GEAR BOX COVER	2	
14	6D000311	SPEED SENSOR	1	
15	841005207	CIRCLIP DIA 52 (INT)	1	
16	124102019	FARE METER GEAR	1	NOT APPLICABLE FOR CARGO
17	822031942	SPRING PIN 3 X 19	2	NOT APPLICABLE FOR CARGO
18	124141015R	ADOPTER NYLON (VE)	2	NOT APPLICABLE FOR CARGO
19	124113018	GREASE NIPPLE (M6)	2	NOT APPLICABLE FOR CARGO
20	811081025	HEX HEAD SCREW M8 X 10 (DRAIN PLUG)	1	
21	485703	WASHER	1	
22	124140011	FARE METER HOUSING ASSY. COMPLETE (MODIFIED)	1	NOT APPLICABLE FOR CARGO
23	124112014	BUSH(10951)	1	NOT APPLICABLE FOR CARGO
24	125012015	PLUG F.M.HOUSING (40734)	1	NOT APPLICABLE FOR CARGO
25	822031942	SPRING PIN 3 X 19	1	NOT APPLICABLE FOR CARGO
26	811051525	SCREW (HEX HEAD M5 X 15)	1	NOT APPLICABLE FOR CARGO
27	20105	PLAIN NUT M5	1	NOT APPLICABLE FOR CARGO
28	B018991	PLUG FOR FAREMETER	1	NOT APPLICABLE FOR CARGO

48

Print Date: 07-Apr-2022

PLATE-24

Gear Box Cover

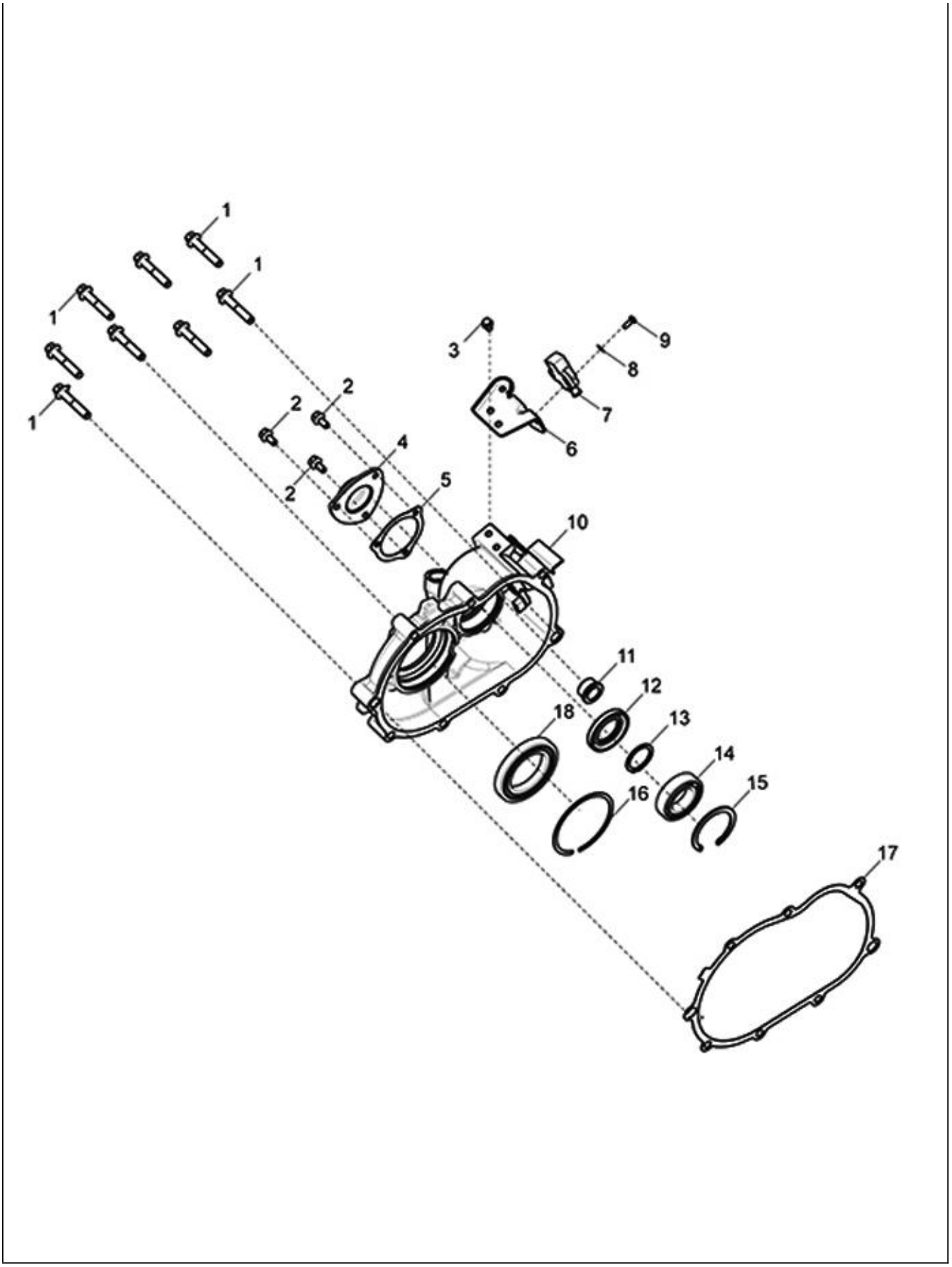
1
1
1
1
2
2
2
3
4
5
6
7
8
9
10
11
12
13
14
15
16
17
18

49

Print Date: 07-Apr-2022

PLATE-24

Gear Box Cover

Fig. No.	Part No.	Description	Qty	Remarks
1	B042798	FLANGED HEXAGONAL HEAD SCREW M8X45	8	
2	1A016964	CSK PHILIPS HEAD SCREW	3	
3	1A010966	FLANGED HEXAGONAL HEAD SCREW	2	
4	B075002	COVER PLATE (DIFF. COVER) - VE	1	
5	1A000826	GASKET	1	
6	128306015	STOPPER PLATE R.C. LEVER	1	
7	567498R	BRAKE/REVERSE LIGHT SW (INTEGRAL CAP)-PAV	1	
8	3054	PLAIN WASHER	2	
9	15996	PHIL RD HD SCREW M4X12	2	
10	1A010093	GEAR BOX COVER	1	
11	B042486	BUSH	1	
12	1A000236	OIL SEAL	1	
13	842003000	CIRCLIP DIA. 30 (EXT.)	1	
14	880305509R	DEEP GROOVE BALL BEARING 30X55X13	1	
15	841005506	CIRCLIP DIA. 55 (INT)	1	
16	111353	CIRCLIP	1	
17	127141016	GASKET G. B. COVER	1	
18	7066R	RADIAL BALL BEARING	1	

50

Print Date: 07-Apr-2022

PLATE-25
Engine Cover

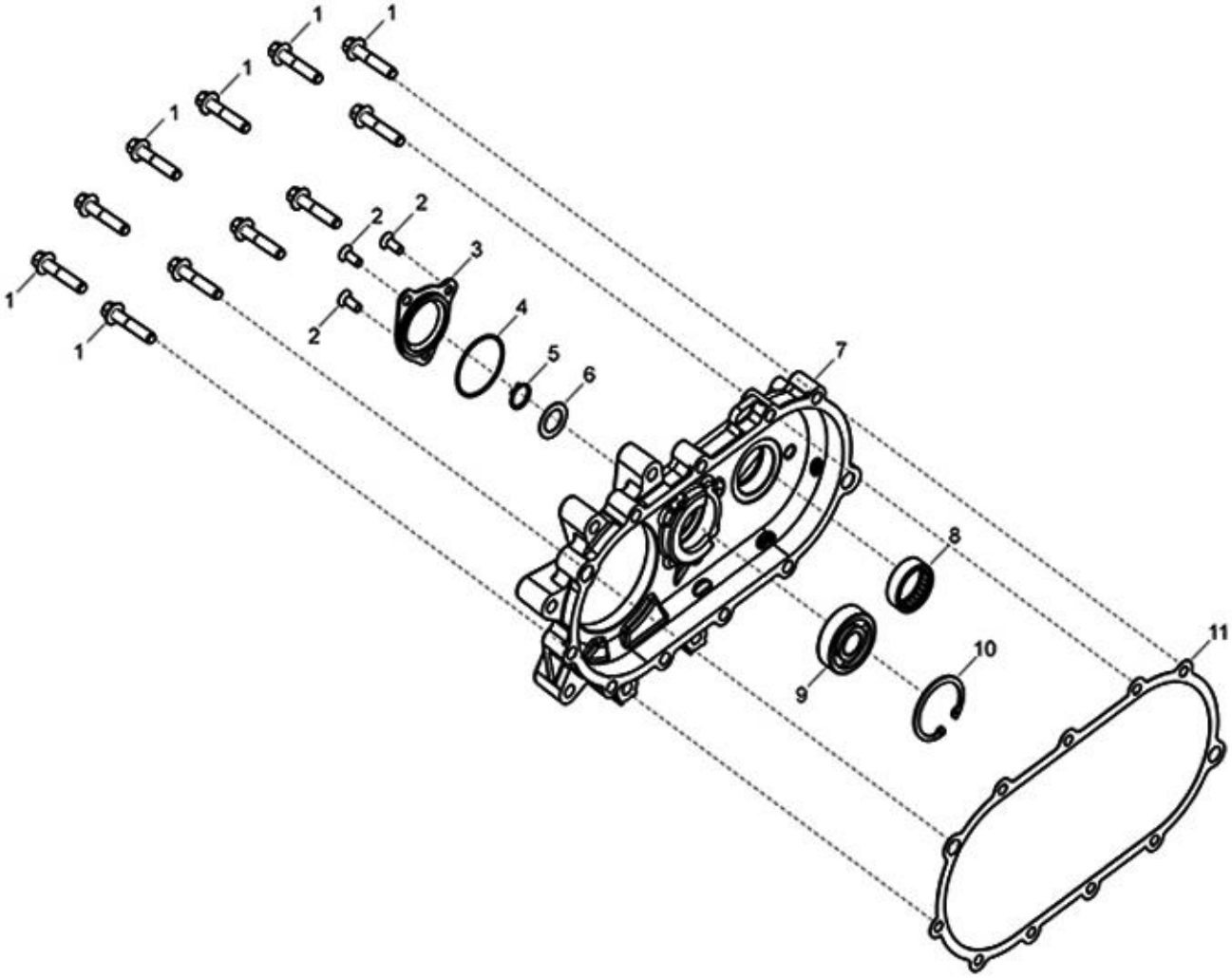
1
1
1
1
1
1
2
2
2
3
4
5
6
7
8
9
10
11

51

Print Date: 07-Apr-2022

PLATE-25

Engine Cover

Fig. No.	Part No.	Description	Qty	Remarks
1	B042799	FLANGED HEXAGONAL HEAD SCREW M8X40	11	
2	1A016964	CSK PHILIPS HEAD SCREW	3	
3	1A017345	COVER	1	
4	1A017361	O-RING	1	
5	006417	RING	1	
6	1A017362	WASHER	1	
7	1A017366	ENGINE SIDE COVER	1	
8	1A013352	NEEDLE BEARING 30X37X12	1	
9	1A017438R	BALL BEARING	1	
10	006647	SPRING RING 47X50.5X1.75	1	
11	B001844	GASKET ENGINE SIDE COVER	1	

52

Print Date: 07-Apr-2022

PLATE-26
primary_secondary_shaft

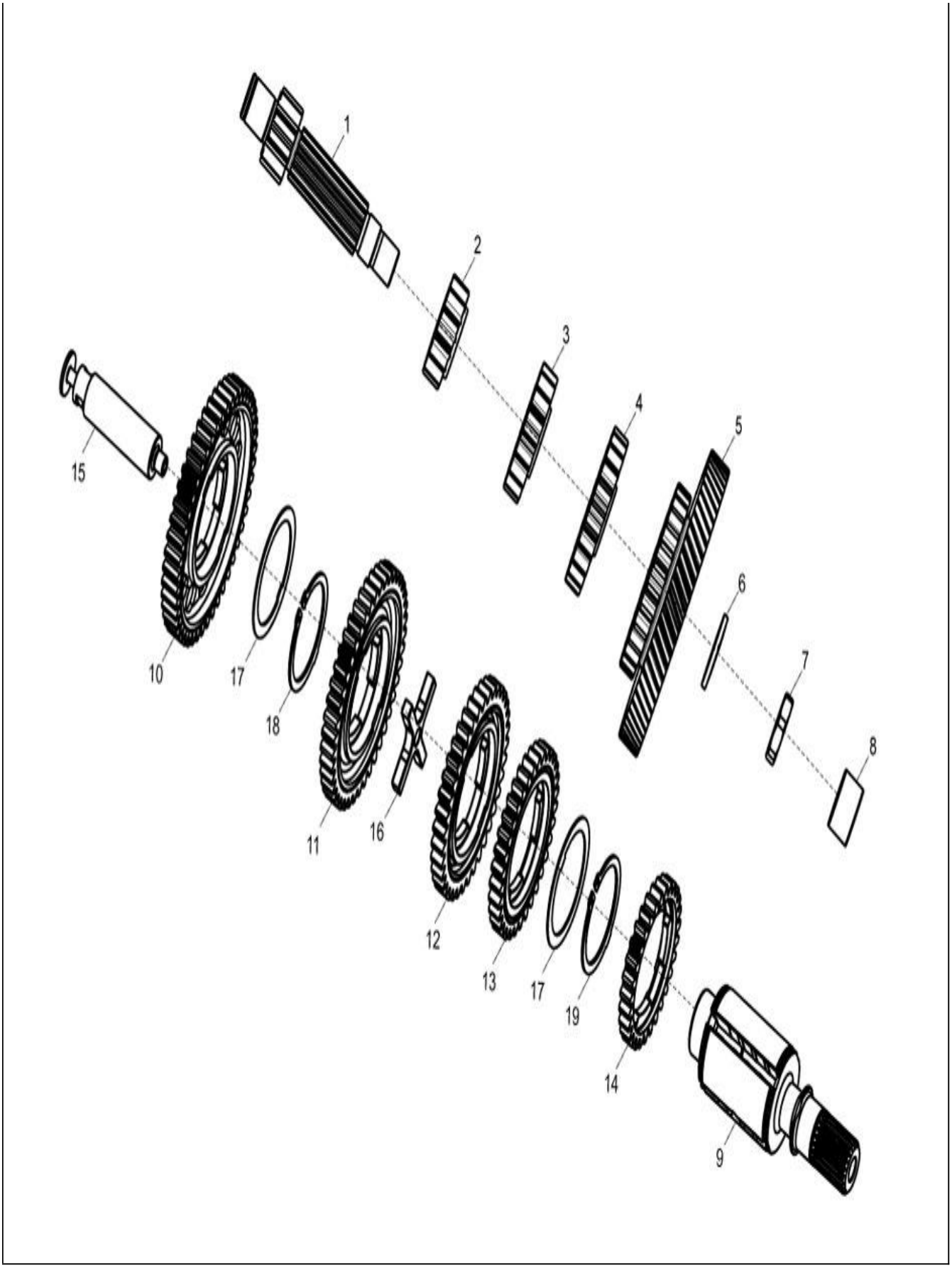
1
2
3
4
5
6
7
8
9
10
11
12
13
14
15
16
17
17
18
19

53

Print Date: 07-Apr-2022

PLATE-26

primary_secondary_shaft

Fig. No.	Part No.	Description	Qty	Remarks
1	1A017356	PRIMARY SHAFT	1	
2	1A013303	2ND SPEED DRIVING GEAR	1	
3	1A013304	3RD SPEED DRIVING GEAR	1	
4	1A013305	4TH SPEED DRIVING GEAR	1	
5	1A017348	IDLE DRIVEN GEAR+5TH SPEED DRIVING GEAR	1	
6	B018464	BELLEVILLE SPRING	1	
7	1A017994	RING NUT	1	
8	1A017364	BUSH	1	
9	1A013336	SECONDARY SHAFT	1	
10	1A017329	1ST SPEED DRIVEN GEAR	1	
11	1A017330	2ND SPEED DRIVEN GEAR	1	
12	1A013333	3RD SPEED DRIVEN GEAR	1	
13	1A013334	4TH SPEED DRIVEN GEAR	1	
14	1A018761	5TH SPEED DRIVEN GEAR	1	
15	1A013330	STEM GEAR OPERATING	1	
16	B003924	CROSS	1	
17	1A018762	LOCK WASHER	2	
18	009101	SEEGER RING	1	For 1St Gear
19	842004808	CIRCLIP DIA.48 (EXT)	1	For 5th Gear

54

Print Date: 07-Apr-2022

PLATE-27
Differential Unit

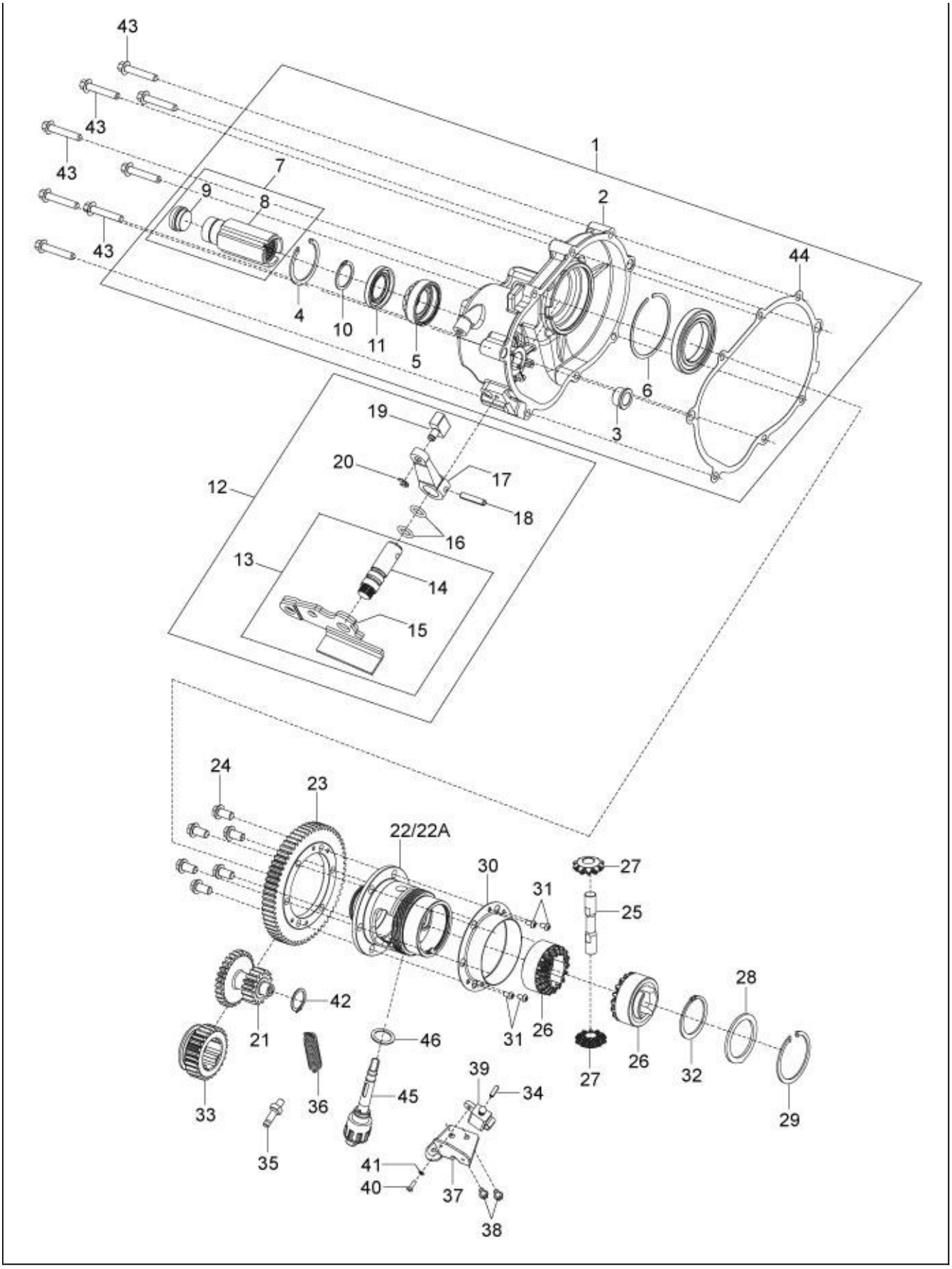
43
43
43
43
1
7
9
8
2
44
4
10
11
5
6
3
19
20
17
12
18
16
13
14
15
24
23
22/22A
30
27
31
25
28
42
21
46
31
26
26
32
27
39
34
45
36
33
29
35
41
40
37
38

55

Print Date: 07-Apr-2022

PLATE-27
Differential Unit

Fig. No.	Part No.	Description	Qty	Remarks
1	SP1A016696	DIFFERENTIAL COVER WITH I.P._SPD	1	
2	1A010093	GEAR BOX COVER	1	
3	B042486	BUSH	1	
4	841005506	CIRCLIP DIA. 55 (INT)	1	
5	7066R	RADIAL BALL BEARING	1	
6	111353	CIRCLIP	1	
7	SP1A009945	REVERSE SHAFT WITH I.P.	1	
8	1A009926	REVERSE SHAFT	1	
9	B018991	PLUG FOR FAREMETER	1	
10	842003000	CIRCLIP DIA. 30 (EXT.)	1	
11	1A000236	OIL SEAL	1	
12	SP1A018786	COMPLETE INVERTER LEVER SECTOR- SPD	1	App.Only For High Slope Veh.(HD)
12	SP1A018787	MODI. INVERTER LEVER SECTOR ASSY_SPD	1	
13	1A018785	INVERTER LEVER SECTOR WITH IP	1	NS-service on Sr no.12
14	1A010138	PIN	1	Not Servicable
15	128100019	SECTOR PLATE STOPPER R.L. ASSEMBLY	1	Not Serviceable
16	1A005176	O- RING	2	
17	127151011	LEVER(R C GEAR) (41738)	1	
17	120322013	LEVER (R C GEAR) (41929)	1	App.Only For High Slope Veh.(HD)
18	1A019553	ELASTIC PIN	1	
19	120321019	SLIDER BLOCK R.C. GEAR	1	
20	843000500	CIRCLIP DIA.5 (EXT) TYPE C	1	
21	1A013368	IDLER GEAR	1	
21	1A013370	IDLER GEAR	1	App.Only For High Slope Veh.(HD)
22	SPCM304202	DIFFERENTIAL COVER ASSEMBLY_SPD	1	CONSISTS OF SR. NO.- 25,26,27,30,31
22.A	288730	DIFFERENTIAL CAGE	1	
23	1A014032	DIFFERENTIAL CROWN	1	App.Only For High Slope Veh.(HD)
23	1A014034	DIFFERENTIAL CROWN WHEEL	1	
24	1A004807	SCREW	6	
25	132129	PIN	1	
26	132136R	GEAR SUN	2	service in Ser 940028
27	165155R	DIFFERENTIAL GEAR	2	service in Ser 940028
28	220575	WASHER 65X3	1	
29	132134	CIRCLIP	1	
30	1A011778	SATELLITE PIN RETAINER	1	

56

Print Date: 07-Apr-2022

PLATE-27
Differential Unit

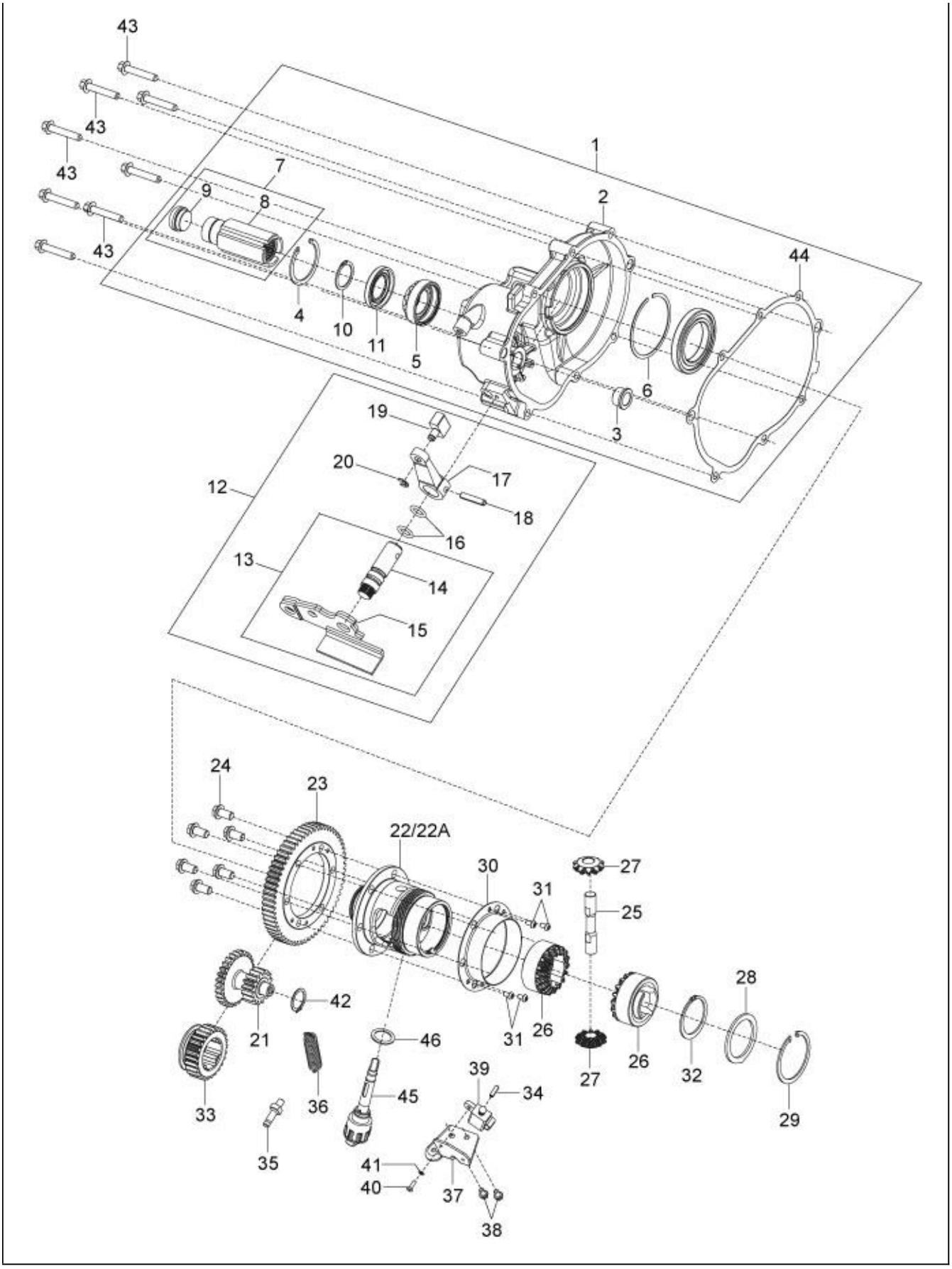
43
43
43
43
1
7
9
8
2
44
4
10
11
5
6
3
19
20
17
12
18
16
13
14
15
24
23
22/22A
30
27
31
25
28
42
21
46
31
26
26
32
27
39
34
45
36
33
29
35
41
40
37
38

57

Print Date: 07-Apr-2022

PLATE-27
Differential Unit

Fig. No.	Part No.	Description	Qty	Remarks
31	1A000612	RETAINER SCREW - PRE COATED	4	NI
32	006450	EXT CIRCLIP DIA 48	1	
33	1A013373	SLIDING GEAR	1	App.Only For High Slope Veh.(HD)
33	1A013372	REVERSE SLIDING GEAR	1	
34	822051647	SPRING PIN 5X16	1	
35	128307019	BOLT R.C. SPRING RETAINING	1	
36	127111011	REVERSE GEAR SPRING	1	
37	128306015	STOPPER PLATE R.C. LEVER	1	
38	1A010966	FLANGED HEXAGONAL HEAD SCREW	2	
39	567498R	BRAKE/REVERSE LIGHT SW (INTEGRAL CAP)-PAV	1	
40	15996	PHIL RD HD SCREW M4X12	1	
41	3054	PLAIN WASHER	1	
42	842002501	CIRCLIP DIA 25 (EXT)	1	
43	B042798	FLANGED HEXAGONAL HEAD SCREW M8X45	8	
44	127141016	GASKET G. B. COVER	1	
45	1A019526	OIL DIPSTICK WITH PLUG	1	
46	127016015	DIPSTICK SEALING WASHER	1	

58

Print Date: 07-Apr-2022

PLATE-28

drive shaft & Wheel assly.

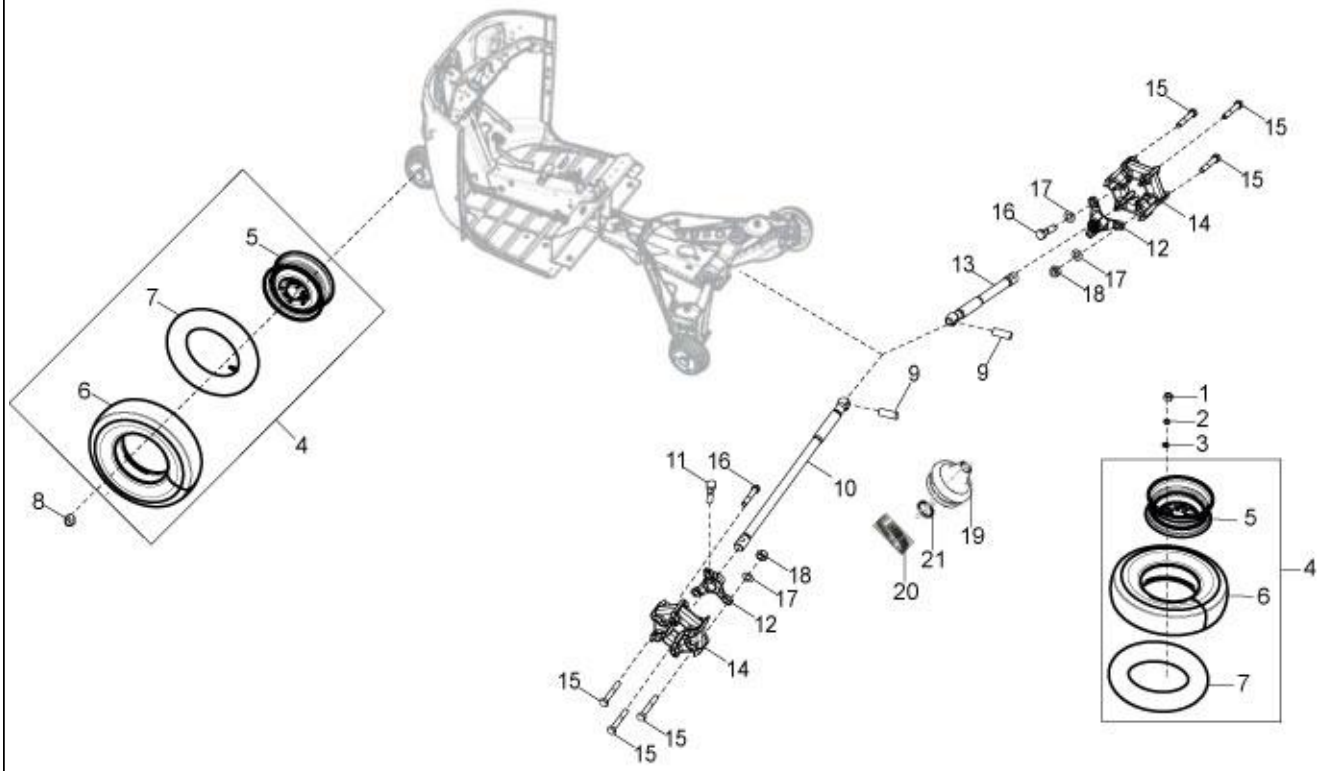
15
15
15
17
16
14
12
13
17
18
9
9
5
7
6
4
8
1
2
3
11
16
10
19
21
20
18
17
12
14
15
15
15
5
4
6
7

59

Print Date: 07-Apr-2022

PLATE-28

drive shaft & Wheel assly.

Fig. No.	Part No.	Description	Qty	Remarks
1	20108	HEX NUT M8	1	
2	13861	PLAIN WASHER 20X8.2X2.5	1	
3	016408	SPRING WASHER	1	
4	652027R	WHEEL ASSLY 501	4	
5	644973R	WHEEL RIM ASSY.	4	
6	587971	TYRE 4.50 X 10 8 PR	4	
7	151924	INNER TUBE TYRE 4.5 X 10 INCH	4	
8	660931	WHEEL NUT (M12 X 1.5)	9	
9	113099	PIVOT	2	
10	587687	PROP. SHAFT SUB ASSY. LT (WITH PIN)	1	
11	B024614	HEX HEAD BOLT M10X45 CL 10.9	6	
12	111498	ELASTIC HUB	2	
13	587685	PROP. SHAFT SUB ASSY. RT (WITH PIN)	1	
14	643576	FLEXIBLE COUPLING	2	
15	15594	HEX HDD BOLT M10 X 35	6	
16	B024373	ALLEN BOLT M10X65 CL 10.9	6	
17	3068	PLAIN WASHER	12	
18	136426	NUT WITH COLLAR	12	
19	6C000016	BELLOW	2	
20	6C000041	OTIKAR CLAMP FOR BELLOW	2	
21	6C000312R	SEAL RING	2	

60

Print Date: 07-Apr-2022

PLATE-29

Gear Shifter Assembly

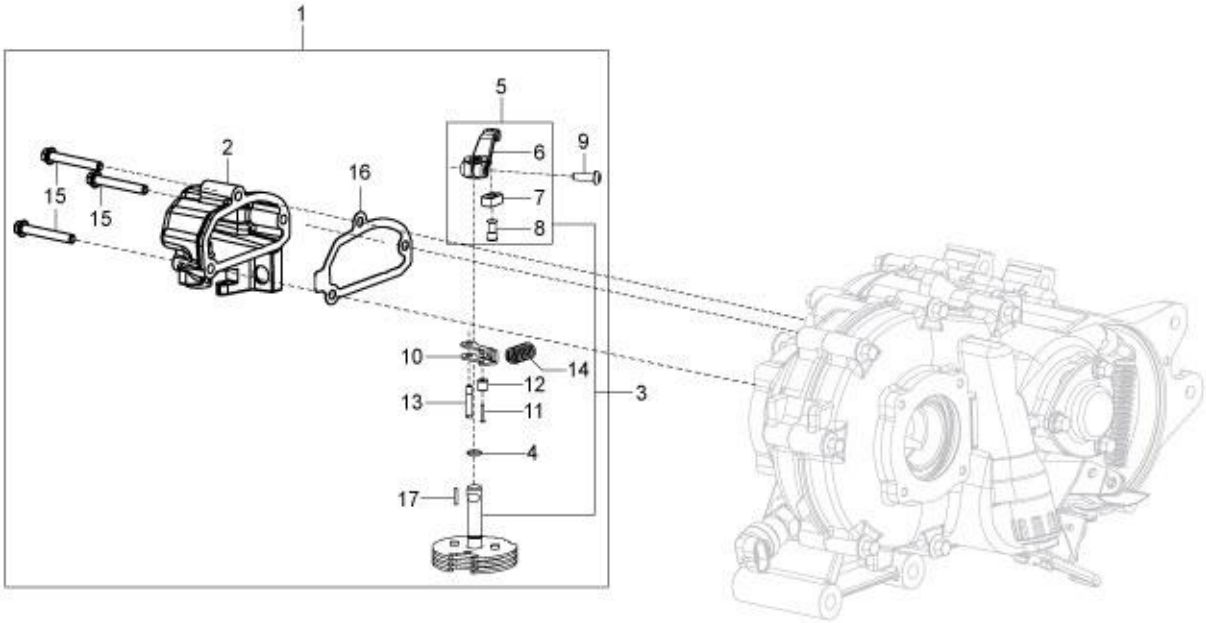
1
5
2
16
6
9
15
15
7
8
10
14
12
3
13
11
4
17

61

Print Date: 07-Apr-2022

PLATE-29

Gear Shifter Assembly

Fig. No.	Part No.	Description	Qty	Remarks
1	SP1A017141	GEAR SHIFTER ASSEMBLY	1	
2	1A017095	GEAR SHIFTER COVER	1	
3	SP1A019555	COMPLETE SECTOR ASSEMBLY WITH LEVER SPD	1	
4	1A005178	O- RING	1	
5	1A017140	COMPLETE LEVER	1	Not Serviceable
6	1A017139	GEAR SHIFT LEVER	1	
7	1A010187	SLIDER BLOCK	1	
8	1A012011	PIN	1	
9	1A001073	TORX HEAD SCREW M5X16	1	
10	126060019	BRACKET ASSY.	1	
11	126053016	PIN FOR ROLLER	1	
12	126052012	ROLLER	1	
13	126054010	SCREW FOR BRACKET	1	
14	126003011	SPRING GEAR SHIFTER ASSY.	1	
15	B016611	FLANGED HEX. HEAD SCREW M6X45 CL10	3	
16	1A013421	GEAR SHIFTER HOUSING GASKET	1	
17	1A019553	ELASTIC PIN	1	

62

Print Date: 07-Apr-2022

PLATE-30
ENGINE MOUNTING

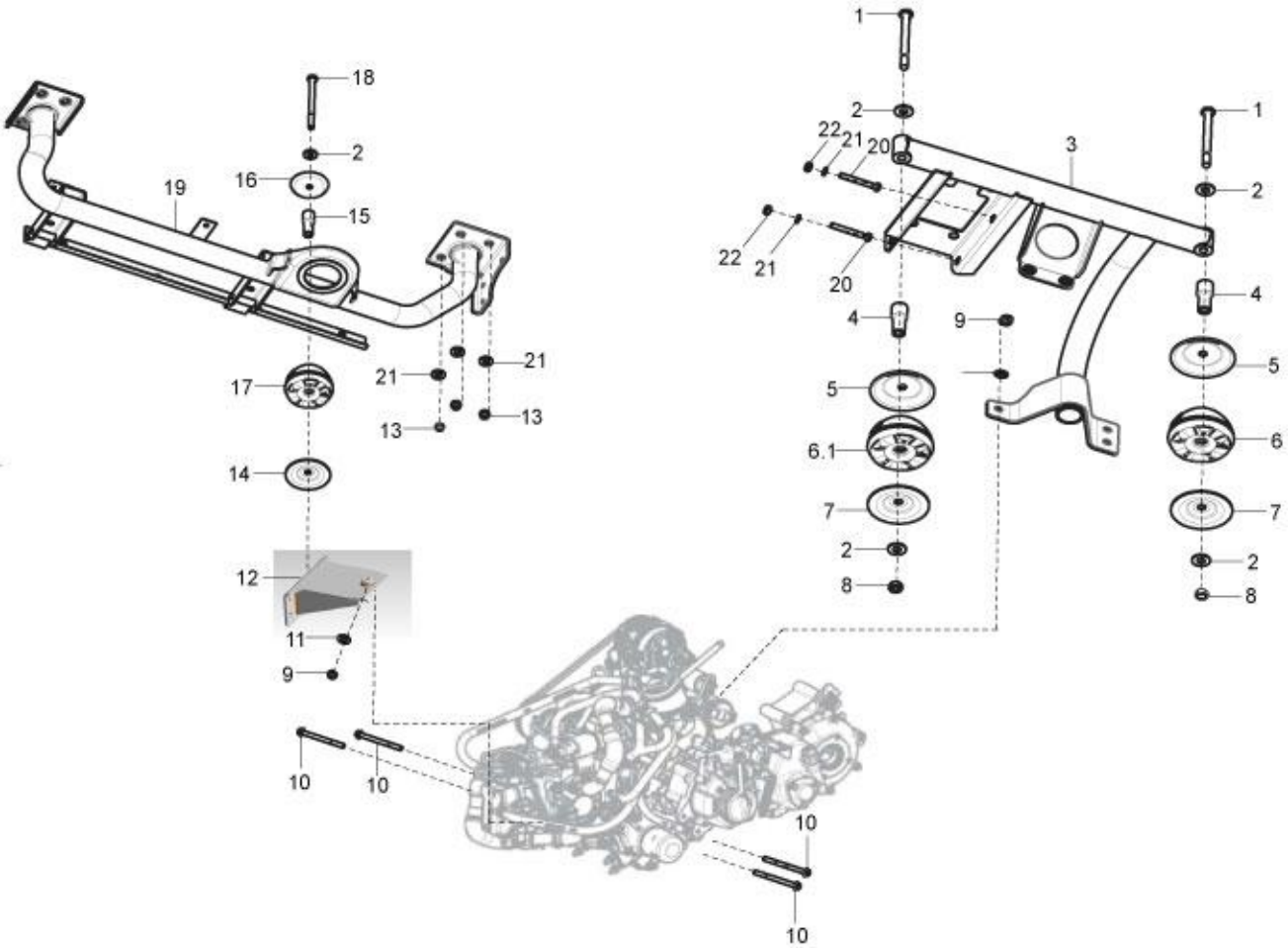
1
2
22
21
20
3
1
2
22
21
20
4
9
4
5
5
6.1
6
7
7
2
2
8
8
18
2
16
19
15
17
21
21
13
13
14
12
11
9
10
10
10
10

63

Print Date: 07-Apr-2022

PLATE-30
ENGINE MOUNTING

Fig. No.	Part No.	Description	Qty	Remarks
1	604948	HEX.HDD BOLT M8 X 110 WITH POINTING	1	
2	2383	PLAIN WASHER M20X8.5X2	4	
3	6A000693	CROSS MEMBER ENGINE MOUNTING ASM	1	
4	569241	SPACER	2	
5	569377	PLATE	2	
6	6A001169	AVM ENGINE MOUNTING FRONT RH	1	
6.1	6A001168	AVM ENGINE MOUNTING FRONT LH	1	
7	569244	PLATE	2	
8	15335	HEX HD NUT M8	2	
9	2438	HEX SELF LOCKING NUT	3	
10	6A000373	M10 COMBI BOLT	4	
11	3058	PLAIN WASHER 15X8.4X1.5	6	
12	6A000696	ENGINE REAR SUPPORTING BKT ASM	1	
13	2438	HEX SELF LOCKING NUT	6	
14	569244	PLATE	1	
15	569241	SPACER	1	
16	569375	PLATE	1	
17	6A001170	AVM ENGINE MOUNTING RR	1	
18	6A001633	HEX HEADED SCREW	1	
19	6A000701	REAR ENGINE MOUNT ASSEMBLY	1	LDx / LDX+ & Dx
20	568689	HEX HEAD BOLT M10X100	2	
21	286328	PLAIN WASHER 20X10.2X2	8	
22	231370	SELF BREAKING NUT M10	2	

64

Print Date: 07-Apr-2022

PLATE-31

DASHBOARD ASSEMBLY & Battery Mounting

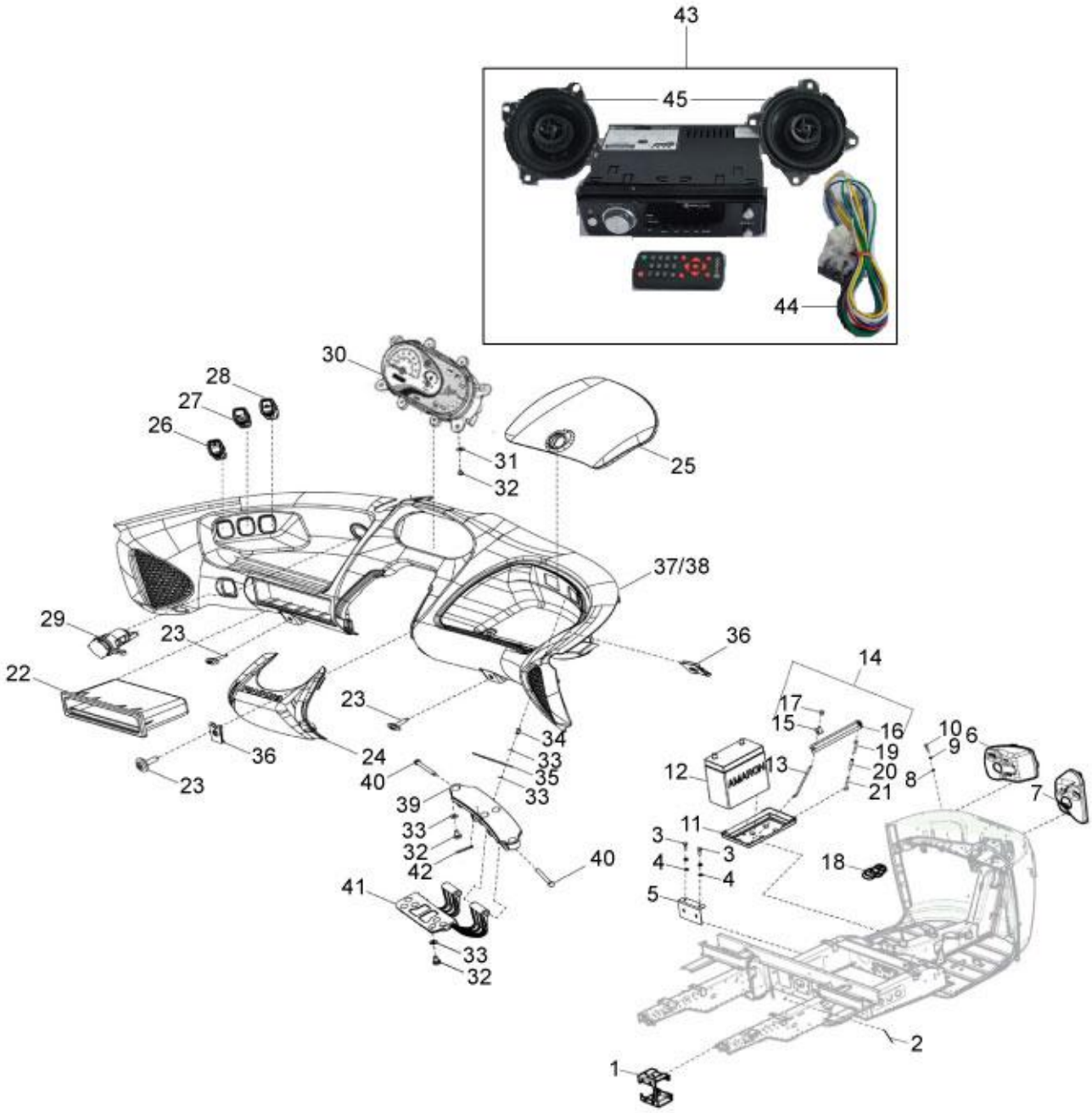
43
45
44
30
28
27
26
31
32
25
37/38
29
23
36
22
14
17
15
16
10
9
6
19
20
21
8
7
12
13
11
3
4
5
18
2
1
34
33
35
24
40
39
42
41

65

Print Date: 07-Apr-2022

PLATE-31

DASHBOARD ASSEMBLY & Battery Mounting

Fig. No.	Part No.	Description	Qty	Remarks
1	6D000253	BKT, FUSE BOX , ASSEMBLY	1	
2	72515	CLAMP	10	
3	31088	HEX HD SCREW M6 X 16 CL 8.8 (811061623)	2	
4	016406	SPRING WASHER	6	
5	6D000240	BKT, IP-MAIN CONNECTOR PARKING	1	
6	616896	COVER LIGHT SOCKET LEFT	1	
7	616897	COVER LIGHT SOCKET RIGHT	1	
8	808000826	PLAIN WASHER M8	3	
9	016408	SPRING WASHER	3	
10	30072	HEX HEAD BOLT M8 X 35	3	
11	B077339	BATTERY TRAY	1	
12	B006806	BATTERY(EXIDE _ EK 50 L)_ EXPORT (501)	1	Export
12	587650R	BATTERIES FOR 3WH (50AH)	1	Domestic
13	B077884	TENSION ROD - LONG	1	
14	604691	ANGLE BAR ASSLY	1	NI. Consist. of sr. no.15 &16
15	568093	BATTERY LOCK STOPPER	1	Not Serviceable
16	604692	ANGLE BAR	1	Not Serviceable
17	13861	PLAIN WASHER 20X8.2X2.5	2	
18	940118	BATTERY , SPARE WHEEL LOCK WITH KEY	1	
19	B077885	TENSION ROD ASSY	1	Included 20,21
20	604890	HALF TIE ROD ASSY.	1	
21	B077883	TENSION ROD- SHORT	2	Under Development
22	B073812	UTILITY BOX	1	
23	660168	PAN SELF TP. SCREW 10 SGX13AB	16	
24	B073811	STEERING COLUMN COVER	1	
25	B073810	GLOVE BOX COVER	1	
26	B073478R	SWITCH 3 POSITION	1	
27	B073479R	WIPER MOTOR SWITCH/ SWITCH WIPER MOTOR	1	
28	B073481R	HAZARD WARNING SWITCH WITH CROWN CAP (12V)(VE)	1	
29	B074905	MOBILE CHARGER	1	
30	6D000232	BSVI DIESEL INSTRUMENT CLUSTER	1	
31	6078	PLAIN WASHER 12 X 5.2 X 1	4	
32	661925	PHILIP PAN HEAD SCREW (M5 X 0.8 X 1.6)	4	
33	3054	PLAIN WASHER	4	
34	567893	POP RIVET 4 X 9.5	2	

66

Print Date: 07-Apr-2022

PLATE-31

DASHBOARD ASSEMBLY & Battery Mounting

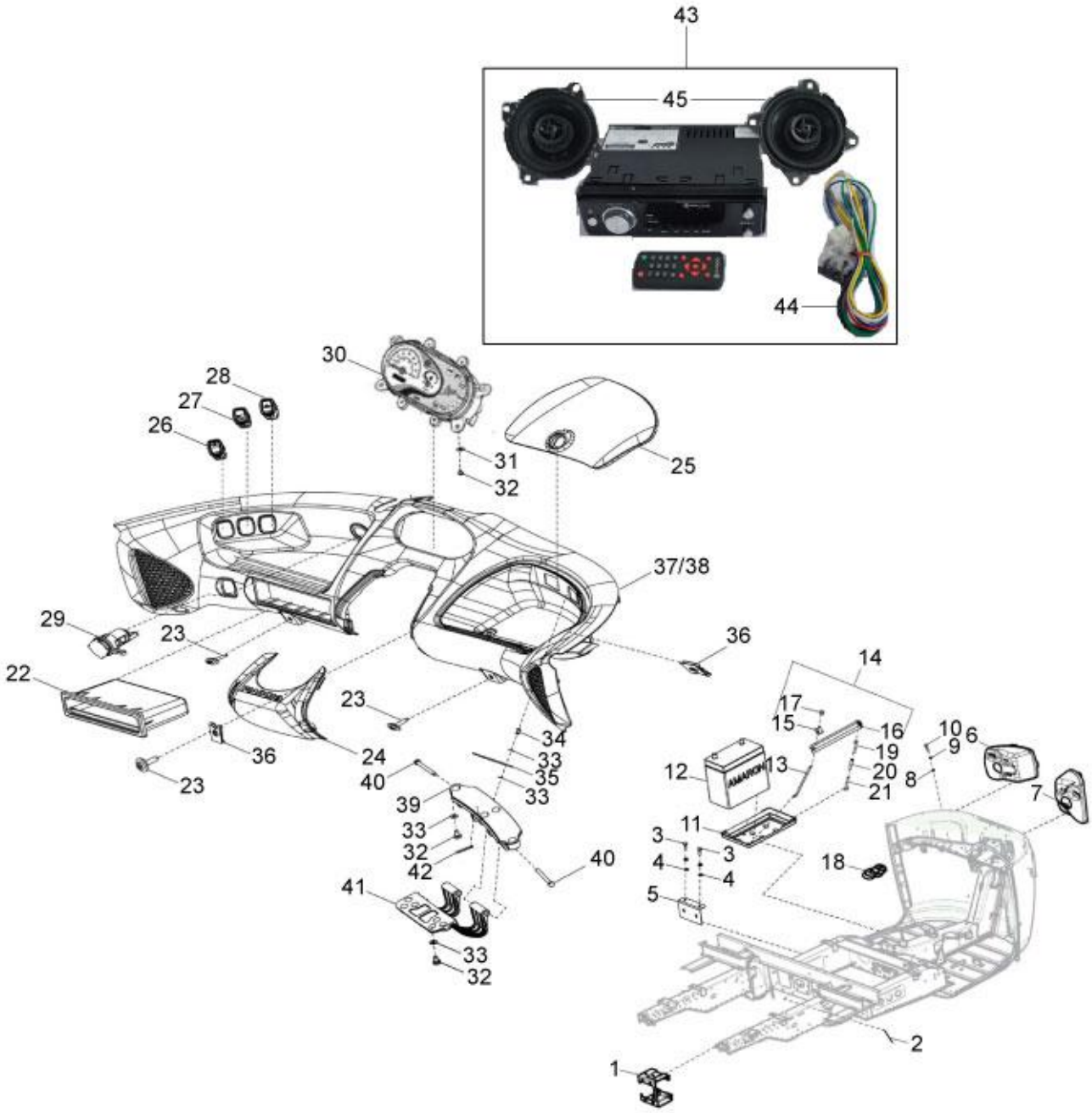
43
45
44
30
28
27
26
31
32
25
37/38
29
23
36
22
14
17
15
16
10
9
6
19
20
21
8
7
12
13
23
24
34
33
35
33
40
39
33
32
42
40
41
33
32
11
3
3
4
4
5
18
2
1

67

Print Date: 07-Apr-2022

PLATE-31

DASHBOARD ASSEMBLY & Battery Mounting

Fig. No.	Part No.	Description	Qty	Remarks
35	643691	BOLT LOCK PLATE	1	
36	8080	SPRING PLATE	7	
37	6B000579	DASHBOARD ASSLY. COMPLETE	1	
38	B076165	DASHBOARD WITH GLOVE BOX COVER SUB ASSLY	1	Under Development
39	B073813	HINGE MTG. BKT.	1	
40	B074262	PIN	2	
41	B073814	HINGE	1	
42	567920	SPLIT PIN	2	
43	KIT6D000952	KIT ELECTRONIC AUDIO SYSTEM AND PIGTAIL	1	
44	6D000948	PIGTAIL, MUSIC SYSTEM	1	
45	6D000952	ELECTRONIC AUDIO SYSTEM	1	

68

Print Date: 07-Apr-2022

PLATE-32

Main frame Assly & Cargo Body & Mirror

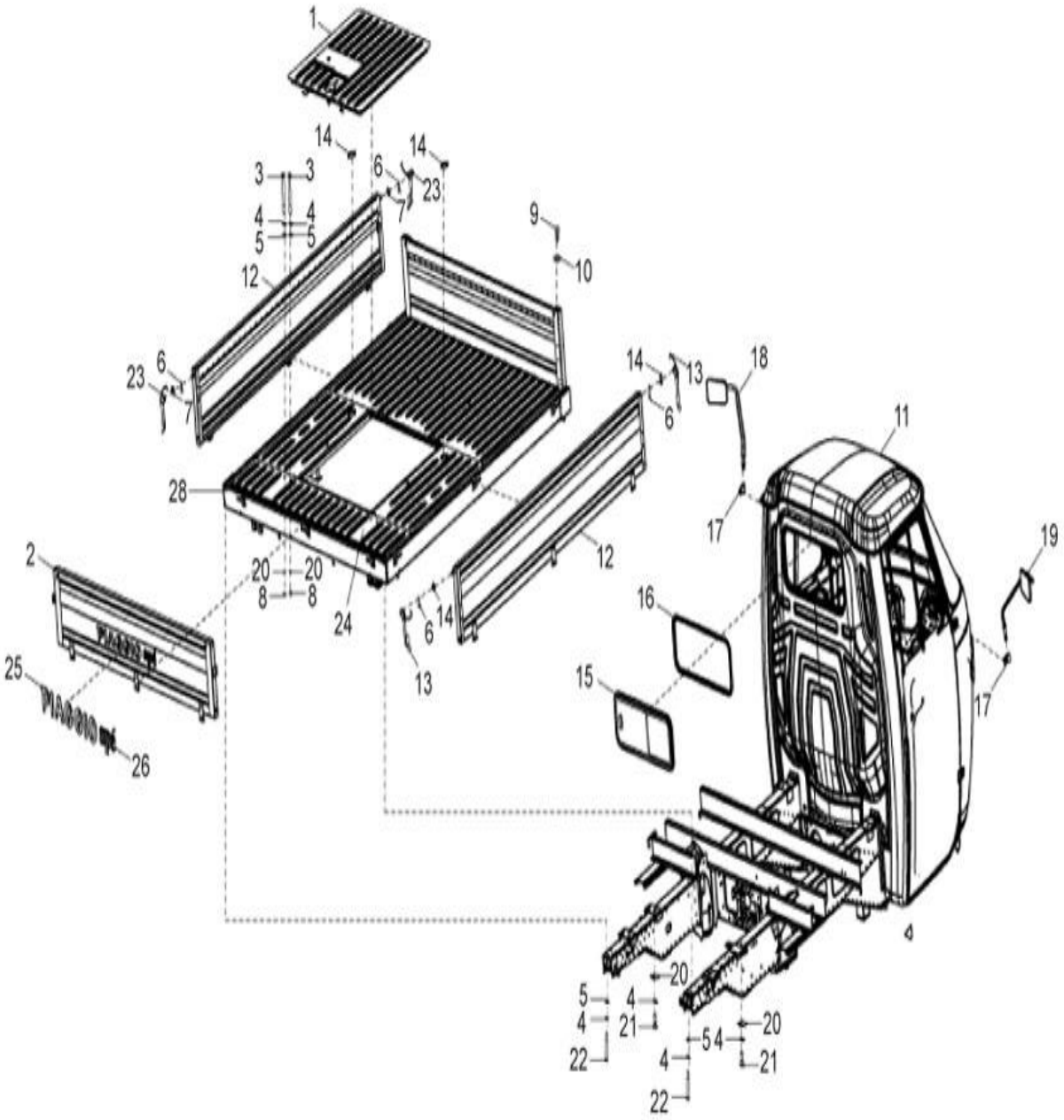
1
14
14
3
3
6
23
7
4
4
5
5
9
10
12
23
6
7
14
13
18
6
11
28
17
19
2
20
20
8
8
24
12
16
6
14
13
25
15
17
26
20
5
4
4
21
22
20
54
21
4
22

69

Print Date: 07-Apr-2022

PLATE-32

Main frame Assly & Cargo Body & Mirror

Fig. No.	Part No.	Description	Qty	Remarks
1	660207ED	ENGINE INSPECTION DOOR 501 CNG/LPG	1	
2	B042505ED	TAIL GATE PANEL DTL 501 PICK UP/LD-CED	1	
3	6B002075	HEX HEAD BOLT (M8 X 85)	2	
4	016408	SPRING WASHER	4	
5	808000826	PLAIN WASHER M8	4	
6	12778	SPLIT PIN 3 X 20	3	
7	3057	PL. WASHER 13 X 7 X 1	3	
8	20108	HEX NUT M8	2	
9	31089	HEX HEAD SCREW M6X18 CL 8.8	4	
10	016406	SPRING WASHER	4	
11	6B001643BW	MAIN FRAME WITH CABIN DOORS_LDX_BS6-BW	1	LDX
11	6B001643CB	MAIN FRAME WITH CABIN DOORS_LDX_BS6-CB	1	LDX
11	6B001643EG	MAIN FRAME WITH CABIN DOORS_LDX_BS6-EG	1	LDX
11	6B001643CO	MAIN FRAME WITH CABIN DOORS_LDX_BS6-CO	1	LDX
11	6B001643GY	MAIN FRAME WITH CABIN DOORS_LDX_BS6-GY	1	LDX
11	6B001643WR	MAIN FRAME WITH CABIN DOORS_LDX_BS6-WR	1	LDX
11	6B001643PA	MAIN FRAME WITH CABIN DOORS_LDX_BS6-PA	1	LDX
11	6B001643PB	MAIN FRAME WITH CABIN DOORS_LDX_BS6-PB	1	LDX
11	6B002707BW	MAIN FRAME WITH CABIN DOORS_LDX+_BS6-BW	1	LDX+ with Doors
11	6B002707CB	MAIN FRAME WITH CABIN DOORS_LDX+_BS6-CB	1	LDX+ with Doors
11	6B002707CO	MAIN FRAME WITH CABIN DOORS_LDX+_BS6-CO	1	LDX+ with Doors
11	6B002707EG	MAIN FRAME WITH CABIN DOORS_LDX+_BS6-EG	1	LDX+ with Doors
11	6B002707GY	MAIN FRAME WITH CABIN DOORS_LDX+_BS6-GY	1	LDX+ with Doors
11	6B002707PA	MAIN FRAME WITH CABIN DOORS_LDX+_BS6-PA	1	LDX+ with Doors
11	6B002707PB	MAIN FRAME WITH CABIN DOORS_LDX+_BS6-PB	1	LDX+ with Doors
11	6B002707WR	MAIN FRAME WITH CABIN DOORS_LDX+_BS6-WR	1	LDX+ with Doors
11	6B002773BW	MAIN FRAME WITHOUT DOORS_BW	1	LDX+PU WITHOUT DOOR
11	6B002773CB	MAIN FRAME WITHOUT DOORS_CB	1	LDX+PU WITHOUT DOOR
11	6B002773CO	MAIN FRAME WITHOUT DOORS_CO	1	LDX+PU WITHOUT DOOR
11	6B002773EG	MAIN FRAME WITHOUT DOORS_EG	1	LDX+PU WITHOUT DOOR
11	6B002773GY	MAIN FRAME WITHOUT DOORS_GY	1	LDX+PU WITHOUT DOOR
11	6B002773PA	MAIN FRAME WITHOUT DOORS_PA	1	LDX+PU WITHOUT DOOR
11	6B002773PB	MAIN FRAME WITHOUT DOORS_PB	1	LDX+PU WITHOUT DOOR
11	6B002773WR	MAIN FRAME WITHOUT DOORS_WR	1	LDX+PU WITHOUT DOOR

12	B042529ED	XTRA 501 LD TRAY SIDE PANEL DTL-CED	2	LDX

70

Print Date: 07-Apr-2022

PLATE-32

Main frame Assly & Cargo Body & Mirror

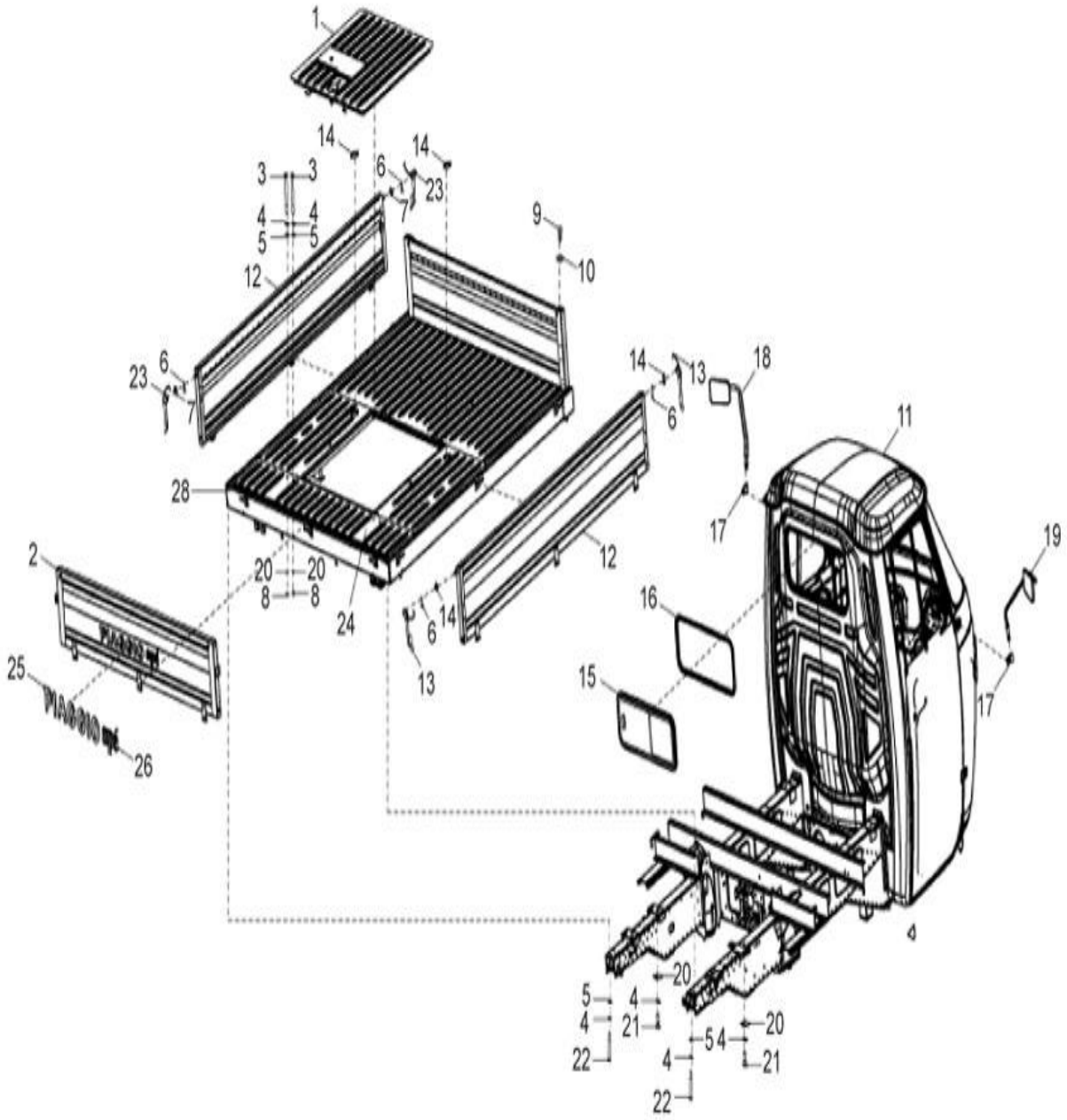
1
14
14
3
3
6
23
7
4
4
5
5
9
10
12
23
6
7
14
13
18
6
11
28
17
19
2
20
20
8
8
24
12
16
6
14
13
25
15
17
26
20
5
4
4
21
20
54
22
4
21
22

71

Print Date: 07-Apr-2022

PLATE-32

Main frame Assly & Cargo Body & Mirror

Fig. No.	Part No.	Description	Qty	Remarks
12	6B000089ED	SIDE PANEL ASSLY (DTL) -CED	2	LDX+
13	128805ED	RH LEVER FOR CLAMPING THE SIDE PANEL CED	2	
14	3058	PLAIN WASHER 15X8.4X1.5	6	
15	6B001067	SLIDING WINDOW ASSY	1	
16	6B001073	BEADING	1	
17	643613	REAR VIEW MIRROR ATTACHMENT	2	
18	6B001495R	LEFT REAR-VIEW MIRROR (D+3)	1	
19	6B001496R	RIGHT REAR-VIEW MIRROR (D+3)	1	
20	604785	SUPPORT PLATE	4	
21	30072	HEX HEAD BOLT M8 X 35	2	
22	B076205	HEAD BOLT (M8 X 85)	2	
23	128804ED	LH LEVER FOR CLAMPING THE SIDE PANEL CED	2	
24	6B000630BW	FLAT CAR ASSLY_LDX_BS6-BW	1	LDX (W /Side panel)
24	6B000630CB	FLAT CAR ASSLY_LDX_BS6-CB	1	LDX (W /Side panel)
24	6B000630CO	FLAT CAR ASSLY_LDX_BS6-CO	1	LDX (W /Side panel)
24	6B000630EG	FLAT CAR ASSLY_LDX_BS6-EG	1	LDX (W /Side panel)
24	6B000630GY	FLAT CAR ASSLY_LDX_BS6-GY	1	LDX (W /Side panel)
24	6B000630WR	FLAT CAR ASSLY_LDX_BS6-WR	1	LDX (W /Side panel)
24	6B000630PA	FLAT CAR ASSLY_LDX_BS6-PA	1	LDX (W /Side panel)
24	6B000630PB	FLAT CAR ASSLY_LDX_BS6-PB	1	LDX (W /Side panel)
24	6B002701BW	ASSLY CARGO BODY LDX PLUS_BW	1	LDX+ (W /Side panel)
24	6B002701CB	ASSLY CARGO BODY LDX PLUS_CB	1	LDX+ (W /Side panel)
24	6B002701CO	ASSLY CARGO BODY LDX PLUS_CO	1	LDX+ (W /Side panel)
24	6B002701EG	ASSLY CARGO BODY LDX PLUS_EG	1	LDX+ (W /Side panel)
24	6B002701GY	ASSLY CARGO BODY LDX PLUS_GY	1	LDX+ (W /Side panel)
24	6B002701PA	ASSLY CARGO BODY LDX PLUS_PA	1	LDX+ (W /Side panel)
24	6B002701PB	ASSLY CARGO BODY LDX PLUS_PB	1	LDX+ (W /Side panel)
24	6B002701WR	ASSLY CARGO BODY LDX PLUS_WR	1	LDX+ (W /Side panel)
25	662323	PIAGGIO TAIL GATE (YESHSHREE) STICKER FOR LIGHT COLOUR SHADE	1	
26	660175	APE STICKER FOR ROLLED BACK PANEL-RED	1	
27	661262	YELLOW REFLECTIVE TAPE	1	NI
28	6B002749BW	PLATFORM S/A_BW	1	Only for platform vehicle
28	6B002749CB	PLATFORM S/A_CB	1	Only for platform vehicle
28	6B002749CO	PLATFORM S/A_CO	1	Only for platform vehicle
28	6B002749EG	PLATFORM S/A_EG	1	Only for platform vehicle

72

Print Date: 07-Apr-2022

PLATE-32

Main frame Assly & Cargo Body & Mirror

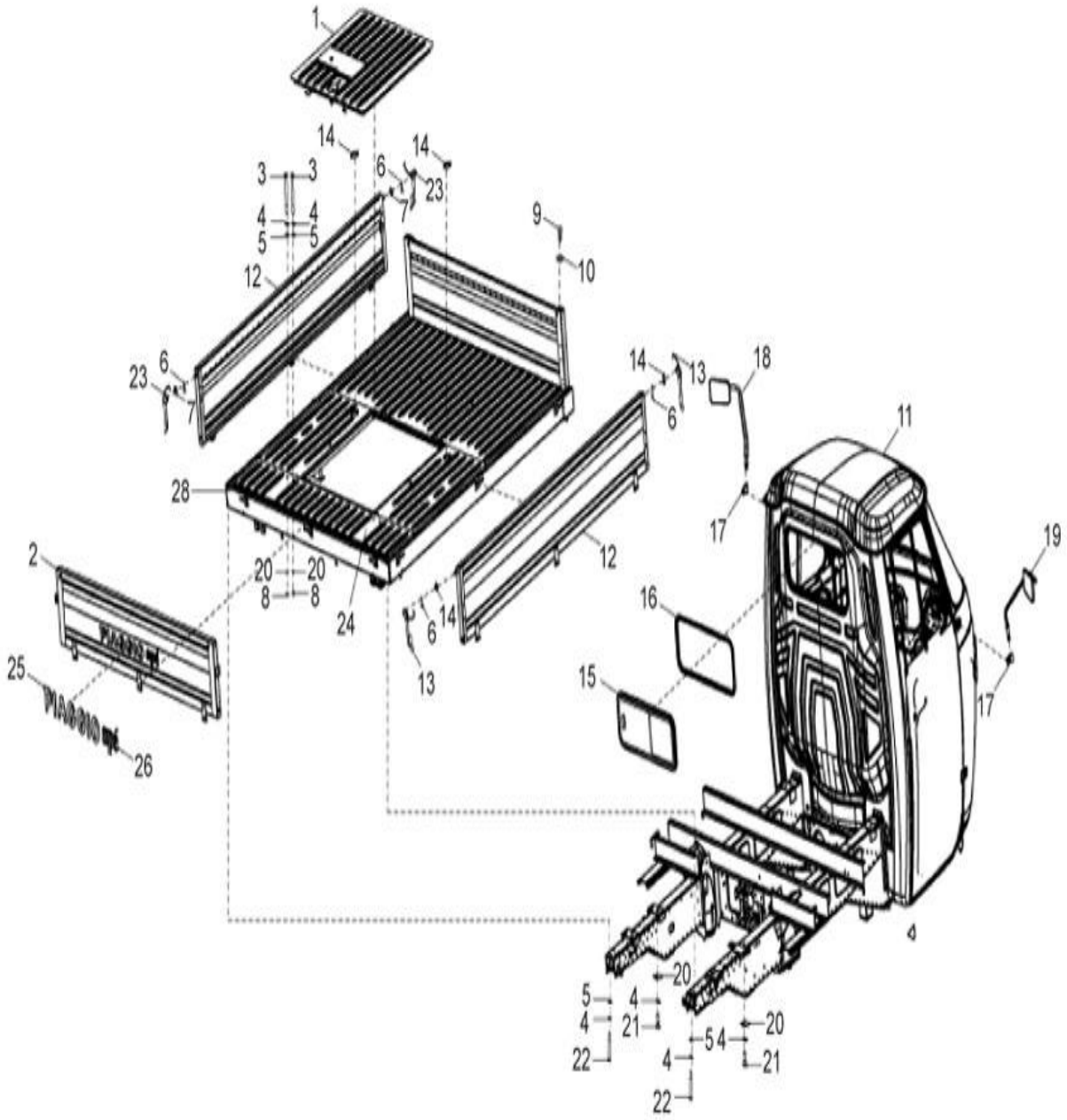
1
14
14
3
3
6
23
7
4
4
5
5
9
10
12
23
6
7
14
13
18
6
11
28
17
19
2
20
20
8
8
24
12
16
6
14
13
25
15
17
26
20
5
4
4
21
20
54
22
4
21
22

73

Print Date: 07-Apr-2022

PLATE-32

Main frame Assly & Cargo Body & Mirror

Fig. No.	Part No.	Description	Qty	Remarks
28	6B002749GY	PLATFORM S/A_GY	1	Only for platform vehicle
28	6B002749PA	PLATFORM S/A_PA	1	Only for platform vehicle
28	6B002749PB	PLATFORM S/A_PB	1	Only for platform vehicle
28	6B002749WR	PLATFORM S/A_WR	1	Only for platform vehicle
28	6B002749ED	PLATFORM S/A_CED	1	Only for platform vehicle

74

Print Date: 07-Apr-2022

PLATE-33

DOORS, TOOLS AND WHEELS

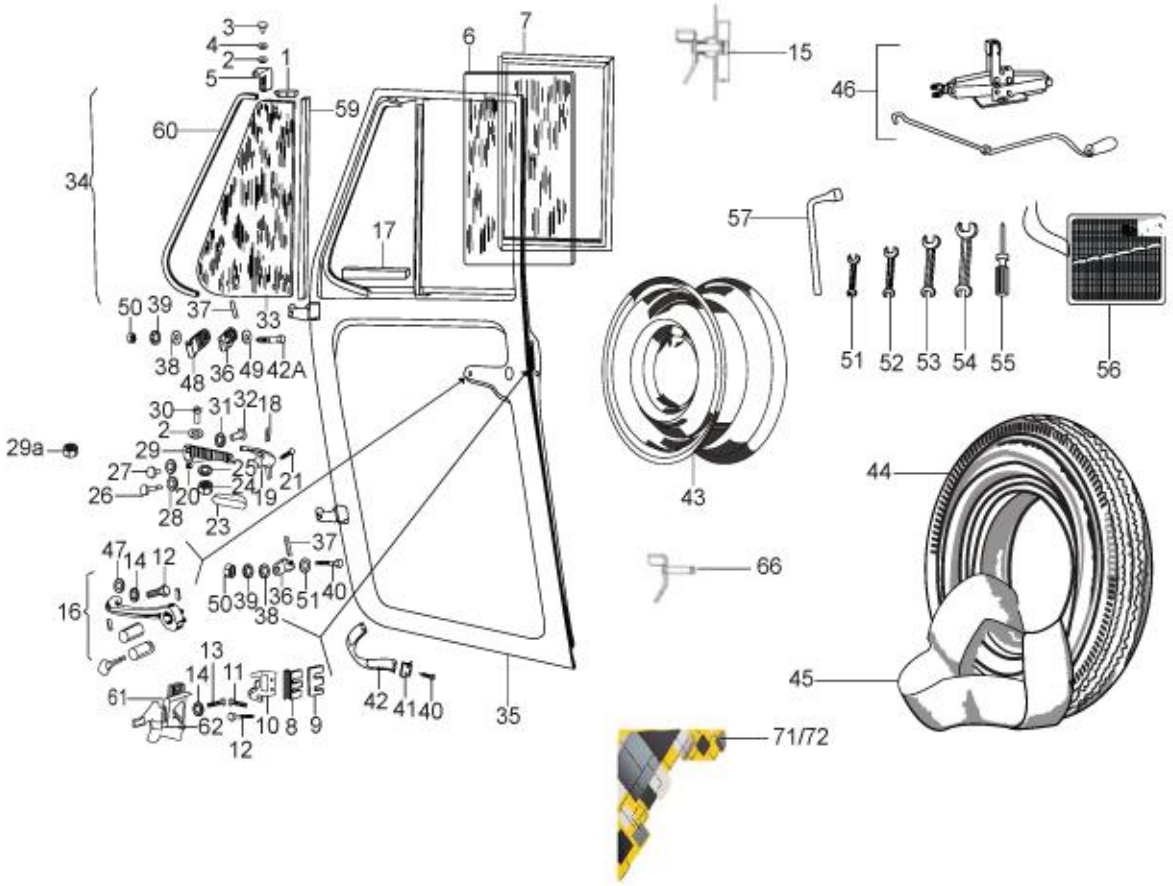
3
4
2
5
1
6
7
15
46
59
60
34
17
57
50 39 37 33
38 48 36 49 42A
51 52 53 54 55
56
30 31 32 18
2
29a
29
27 25 21
26 20 24 19
28 23
43
44
47 14 12
37
16
50 39 36 51 40
38
66
13
14 11
61
62 10 8 9
12
42 41 40
35
45
71/72

75

Print Date: 07-Apr-2022

PLATE-33

DOORS, TOOLS AND WHEELS

Fig. No.	Part No.	Description	Qty	Remarks
1	183077	UPPER PACKING R.H. DOOR RABBET	1	
1	163660	DEFLECTOR PANE RABBET L.H. UPPER PACKING	1	
2	97756	METALLIC PLAIN WASHER	4	
2	6965	SPRING WASHER DIA 5	2	
3	5745	RIVET DIA.7MM	2	
4	6078	PLAIN WASHER 12 X 5.2 X 1	2	
5	108800	UPPER CLAMP OF RIGHT AIR DEFLECTOR	1	
5	152025	UPPER CLAMP OF L.H. AIR REFLECTOR	1	
6	163661	FIXED GLASS FOR THE WINDOW	2	
7	163663	GASKET, WINDOW GLASS	2	
8	140603	SECURITY LOCK CYLINDER (SHIM PLATE)1.0TH	2	
9	193724	PLATE(OPTION SHIM PLATE)	2	
10	182663	BLOCK COMPLETE OF COLLISION DOOR LOCK LH	1	
10	182662	BLOCK COMPLETE OF COLLISION DOOR LOCK RH	1	
11	569156	CSK SCREW (BLOCK CLOSING DOOR)	2	
12	569157	CSK SCREW (BLOCK CLOSING DOOR)	2	
13	30242	SLOT CH. HD. SCREW	3	
14	12546	PLAIN WASHER / MULTI TOOTH LOCK WASHER M5	8	
15	182660R	COMPLETE LOCK OF RH DOOR	1	
15	182661R	COMPLETE LOCK OF LH DOOR	1	
16	B024733	HANDLE WITH PUSH BUTTON LH WITH KEY	1	
16	B024734	HANDLE WITH PUSH BUTTON RH WITH KEY	1	
17	163659	DEFLECTOR PANE RABBET LOWER GASKET	2	
18	8808	SPRING PIN 2.5 X 14	2	
19	B003864	DEFL CLOSING LEVER RH -(PLASTIC)	1	
19	B003865	DEFL CLOSING LEVER LH (PLASTIC)	1	
20	116971	RUBBER GROMMET	2	
21	15727	PAN SELF TAPPING SCREW	2	
22	62961	MAIN SPRING FOR LEVER	2	
23	B042814	COLLISION FOR LEVER	2	
23A	97756	METALLIC PLAIN WASHER	2	
24	20108	HEX NUT M8	2	
25	64263	WINDOW FRICTION WASHER	2	
26	604558	PIVOT FOR LEVER FOR CLOSING DOORS	2	
27	108804	SCREW WITH WIDE HEAD (MALE)	4	

76

Print Date: 07-Apr-2022

PLATE-33

DOORS, TOOLS AND WHEELS

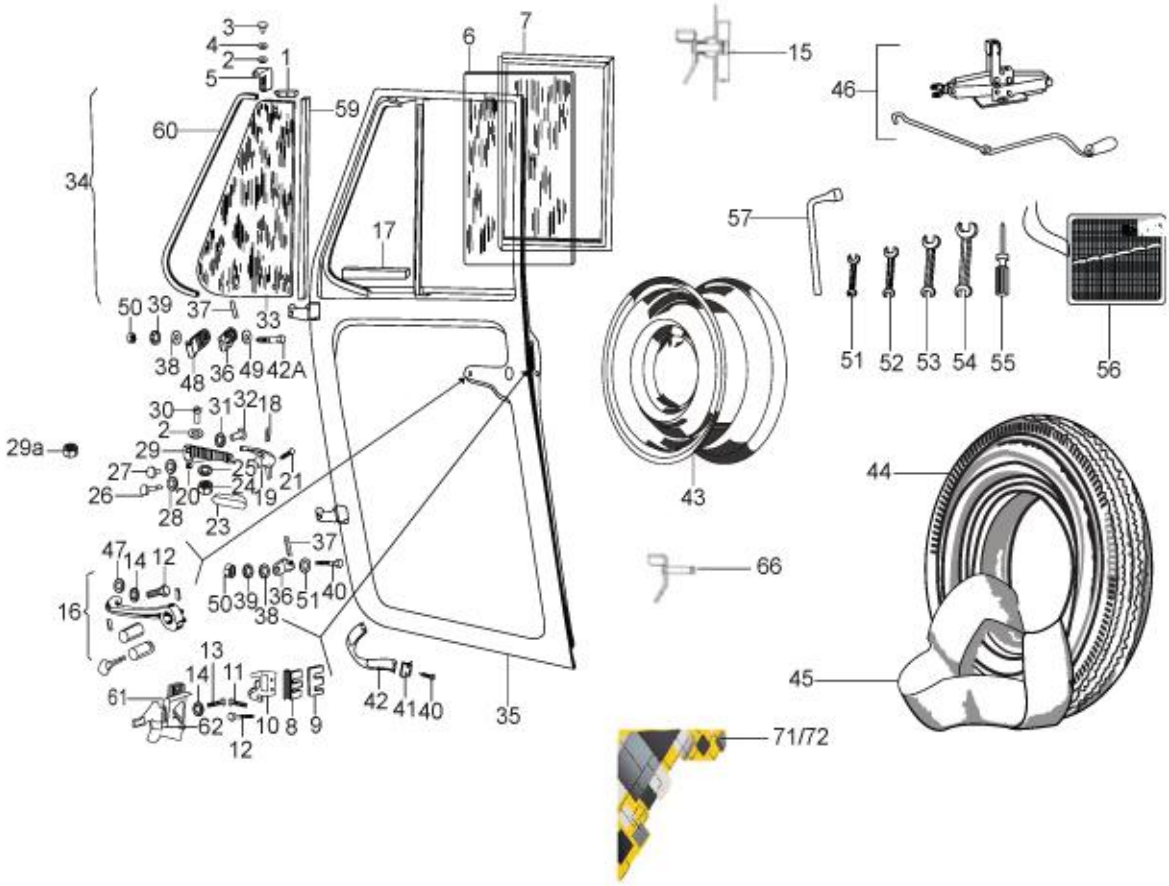
3
4
2
5
1
6
7
15
46
60
59
34
17
57
50 39 37 33
38 48 36 49 42A
51 52 53 54 55
56
30 31 32 18
2
29a
29
27 25 21
26 20 24 19
28 23
43
44
47 14 12
37
16
50 39 36 51 40
38
66
13
14 11
61
62 10 8 9
12
42 41 40
35
45
71/72

77

Print Date: 07-Apr-2022

PLATE-33

DOORS, TOOLS AND WHEELS

Fig. No.	Part No.	Description	Qty	Remarks
28	13935	WASHER	2	
29	108801	LOWER BKT.FOR CONNECTING R.H.DEFLECTOR	1	
29	109263	LOWER BKT.FOR CONNECTION L.H. DEFLECTOR	1	
29A	12136	NUT / NYLOCK NUT M5	2	
30	31058	HEX HEAD SCREW M5 X 16 CC8.8	2	
31	6177	PLAIN WASHER 16 X 8.5 X 1	1	
32	108805	SCREW WITH WIDE HEAD (FEMALE)	2	
32	604812	LARGE HEAD SCREW	2	
33	163665	GLASS, VENT	2	
34	163666SP	RH; VENT WINDOW ASSY.	1	
34	163667SP	LH; VENT WINDOW ASSY.	1	
35	B002847	RH DOOR SUB ASSLY (CED)	1	
35	B002848	LH DOOR SUB ASSLY (CED)	1	
36	632238	DOOR HINGE ASSLY UPPER	4	
37	8847	SPRING PIN 6X64	4	
38	13812	METALLIC PLAIN WASHER	2	
38	13861	PLAIN WASHER 20X8.2X2.5	2	
39	12540	SPRING WASHER M8	4	
40	8451	PAN SELF TP SCREW 6 SGX13 AB	8	
41	89281	BLOCK PLATE STRAP	4	
42	B074173	STOP BELT FOR DOOR	1	
42A	568692	PAN SELF TAP SCREW 6SG X 16AB	4	
43	644973R	WHEEL RIM ASSY.	1	
44	587971	TYRE 4.50 X 10 8 PR	1	
45	151924	INNER TUBE TYRE 4.5 X 10 INCH	4	
46	B001954R	JACK ASSEMBLY COMPONENT	1	
47	6018	PL. WASHER	2	
47A	604560	SCREW TERMINAL ASSY. - GEAR CONTROL	2	
48	605389	HINGE	2	
49	140728	PLAIN WASHER 8.5 X 24 X 3	2	
50	20108	HEX NUT M8	4	
51	567454	DOUBLE END SPANNER7/8	1	
52	567455	DE SPANNER 10X13 IS:2018(ZN PLATING)	1	
53	567456	DOUBLE END SPANNER 12/14	1	
54	567457	DE SPANNER 17/19	1	

78

Print Date: 07-Apr-2022

PLATE-33

DOORS, TOOLS AND WHEELS

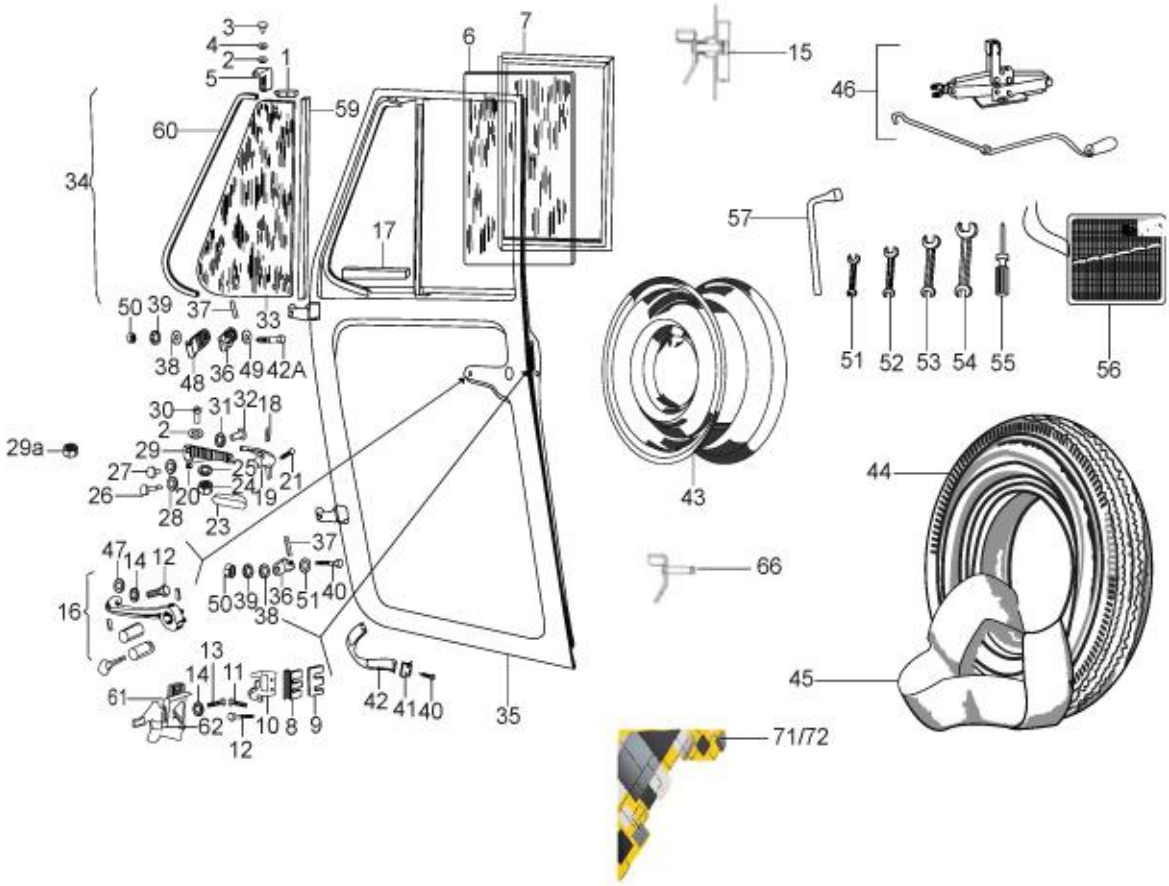
3
4
2
5
1
6
7
15
46
59
60
34
17
57
50 39 37 33
38 48 36 49 42A
51 52 53 54 55
56
30 31 32 18
2
29a
29
27 25 21
26 20 24 19
28 23
43
44
47 14 12
37
16
50 39 36 51 40
38
66
13
14 11
61
62 10 8 9
12
42 41 40
35
45
71/72

79

Print Date: 07-Apr-2022

PLATE-33
DOORS, TOOLS AND WHEELS

Fig. No.	Part No.	Description	Qty	Remarks
55	567458	SCREW DRIVER (-)&(+) 80	1	
56	604707	TOOL BAG	1	
57	567459	L TYPE WHEEL SPANNER (A/F19)	1	
58	E500405518	STARTING ROPE	1	Not applicable
58	192020017	STARTING ROPE	1	Not applicable
58A	569193	FIRST AID KIT	1	NI
59	163782	DEFLECTOR PANE RABBET REAR GASKET	2	
60	163784	DEFLECTOR PANE RABBET FRONT GASKET	2	
61	604689	STOPPER ASSLY RH	1	
61	604690	STOPPER ASSLY LH	1	
62	108356	SPRING FOR LOCK	1	
62	115531	SPRING FOR R.H. LOCK	1	
63	116334	L.H.DOOR GUIDE BOX ASSY	1	
64	30242	SLOT CH. HD. SCREW	3	
65	190255	GROMMET (LONG MEMBER)	1	
66	109121	LEVER COMPLETE OF LH LOCK	1	
67	116333	BOX FOR GUIDE COMPLETE OF RH DOOR	1	
68	109120	LEVER COMPLETE FOR R.H. LOCK	1	
69	B042700 BS6	TOOLS KIT 501ALL MODELS BS6 (W/O ROPE)	1	
70	30074	HEX HEAD BOLT M8 X 40 CL 8.8	1	
71	6B000250	DOOR DECAL LH	1	
72	6B000251	DOOR DECAL RH	1	

80

Print Date: 07-Apr-2022

PLATE-34

Windshield /Glass/ Seats/ Carpets/Mirrors &Engine Door.

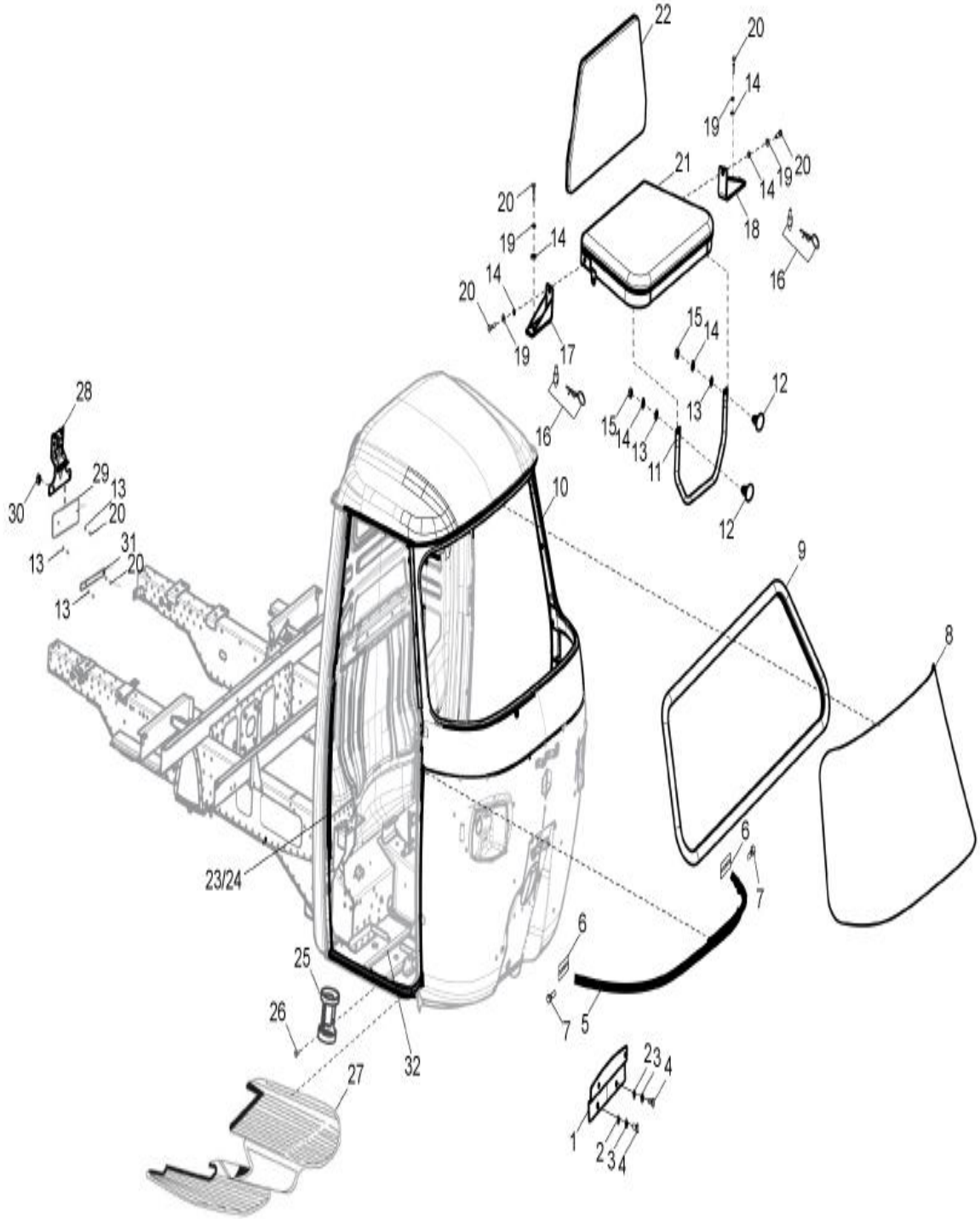
22
20
14
19
21
20
19
14
18
16
20
19
14
14
20
19
17
15
14
12
13
16
15
14
13
11
12
28
29
13
20
30
13
31
20
13
10
9
8
6
7
23/24
6
25
26
7
5
32
27
2
3
4
1
2
3
4

81

Print Date: 07-Apr-2022

PLATE-34

Windshield /Glass/ Seats/ Carpets/Mirrors &Engine Door.

Fig. No.	Part No.	Description	Qty	Remarks
1	6B001140	BRACKET ASSLY FRONT HSRP MTG	1	
2	3056	PLAIN WASHER M6 OD12	2	
3	016406	SPRING WASHER	2	
4	31088	HEX HD SCREW M6 X 16 CL 8.8 (811061623)	2	
5	6B001946	RIM COVER JOINT (JET BLACK)	1	
6	6B001947	TERMINAL	2	
7	15911	PAN SELF TAP SCREW 8SG X 16 AB	2	
8	6B001921	LAMINATED WINSHIELD GLASS	1	Appli.forÃ?Â New Windshield 6B000142ED
8	587963	LAMINATED WINSHIELD GLASS	1	Appli.for old Windshield B076098ED
9	109012	WIND SHIELD PACKING	1	
10	6B000387ED	WINDSHIELD ASSLY(MODI.) - ED	1	Appli.forÃ?Â New Windshield Glass 6B001921
10	B076098ED	WINDSCREEN FRAME ASSLY - C/O 501 BSIV DSL	1	Appli.for old Windshield Glass 587963
11	B078044	DRIVER SEATSUPPORT PIPE (PASS)	1	Under Development
12	6B001462	PLASTIC FASTENER	2	
13	3058	PLAIN WASHER 15X8.4X1.5	4	
14	016408	SPRING WASHER	8	
15	20108	HEX NUT M8	2	
16	6B001486	PIN WITH HOLE	2	Not Servicable
17	6B001586	REAR SEAT MTG. BRACKET S/A	1	
18	6B000740	REAR SEAT MTG. BRACKET S/A	2	
19	13958	PLAIN WASHER	4	
20	30072	HEX HEAD BOLT M8 X 35	6	
21	6B000728	DRIVER SEAT ASSLY.	1	with Pipe
22	6B001458	BACKREST ASSEMBLY - CARGO 501 BSVI	1	
23	6B001204R	DOOR BEADING CARGO LH	1	
24	6B001207R	DOOR BEADING CARGO RH	1	
25	645141	BOTTLE CARRIER STAND	1	
26	660168	PAN SELF TP. SCREW 10 SGX13AB	2	
27	6B002008	FRONT CARPET DIESEL	1	
28	6B001118	BRACKET ASSLY-REAR HSRP MTG	1	
29	6B001129	REGISTRATION NUMBER PLATE(HSRP)	1	
30	261323	NUT	2	
31	6B001140	BRACKET ASSLY FRONT HSRP MTG	1	
32	587905PC	CABIN FLOOR SUB-ASSY.	1	

82

Print Date: 07-Apr-2022

PLATE-35
MUDGUARD & STICKER

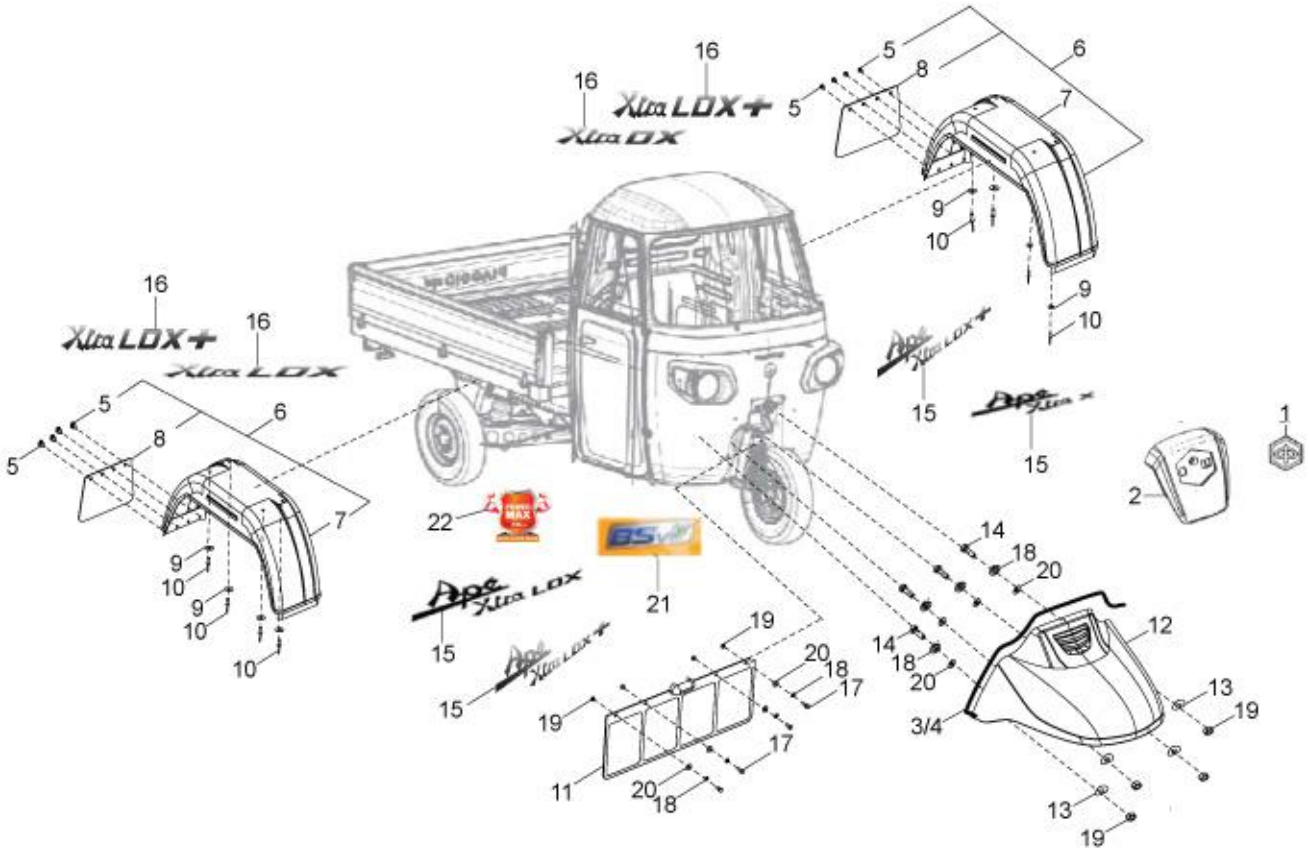
16
16
Xtra LDX+
Xtra DX
5
8
6
7
9
10
9
10
16
16
Xtra LDX+
Xtra LDX
5
8
6
5
7
9
10
9
10
10
22
21
15
15
15
15
1
2
14
18
20
14
18
20
12
13
19
3/4
13
19
19
20
18
17
19
17
11
20
18

83

Print Date: 07-Apr-2022

PLATE-35

MUDGUARD & STICKER

Fig. No.	Part No.	Description	Qty	Remarks
1	B076120	HEXAGONAL EMBLEM	1	
2	B076001	LOGO SUPPORT_CITY UPGRADE	1	
3	B076801	FRONT MUDGUARD RUBBER BEADING	1	
4	B076802	FRONT MUDGUARD PARTITION RUBBER BEADING	1	
5	142425	BUTTON	4	
6	B042619	REAR MUDGRD AND MUDFLAP SUB ASSY.	2	
7	B042612	REAR MUDGUARD RH/LH	2	
8	142424	MUDFLAP FOR RR MUDGUARD	2	
9	16603	PLAIN WASHER (METALLIC)	8	
10	604603	RIVET	8	
11	116103	MUD FLAP FRONT	1	
12	B075974	FRONT MUDGUARD	1	
13	78307	BENT SPRING WASHER M6	4	
14	31089	HEX HEAD SCREW M6X18 CL 8.8	4	
15	6B000207	6 FT CARGO FRONT STICKER (N.I)	1	LDX+
15	B078876	STICKER DECAL FR. DOME (APE XTRA LDX)	1	LDX
16	6B000208	6 FT CARGO SIDE PANEL STICKER (N.I)	2	LDX+
16	B078870	STICKER DECAL SIDE PANEL (XTRA LDX)	1	LDX
17	31088	HEX HD SCREW M6 X 16 CL 8.8 (811061623)	36	
18	16406	SPRING WASHER M6 OD12	44	
19	20106	HEX NUT M6	44	
20	13880	METALIC PLAIN WASHER	4	
21	6B001978	BS6 LOGO	1	
22	6B002165	POWER MAX STICKER - CARGO	1	

84

Print Date: 07-Apr-2022

PLATE-36
REAR SUSPENSION

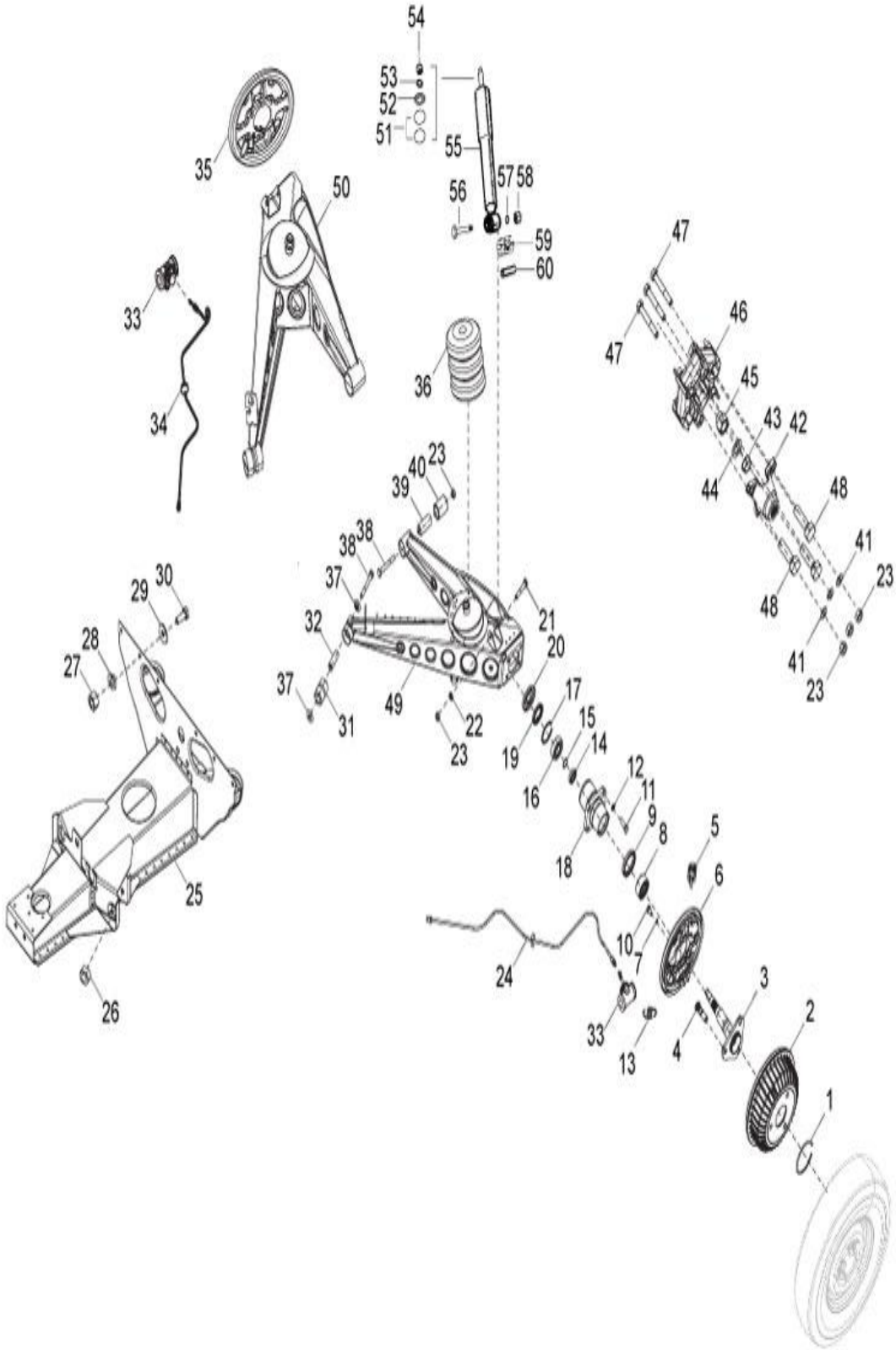
54
53
52
51
55
57 58
56
59
60
35
50
33
34
36
47
46
45
43 42
44
48
41
23
39
40
38
37
32
31
49
22
21
20
17
15
14
19
16
12
11
9
8
18
5
6
10
7
24
33
13
4
3
2
1
29
30
28
27
25
26

85

Print Date: 07-Apr-2022

PLATE-36
REAR SUSPENSION

Fig. No.	Part No.	Description	Qty	Remarks
1	107870	ELASTIC RING	2	
2	152580	BRAKE DRUM APE - 501	2	
3	6C000060	WHEEL AXLE	2	
4	652520	BOLT FOR AXLE M12 X 40 (VE WHEEL RIM)	6	
5	602497	JAWS STOP SPRINGS	2	
6	6C000277	JAWS-SUPPORTING DISK FOR LEFT WHEEL WITH	1	
7	12536	SPRING WASHER	4	
8	661282	NEEDLE ROLLER BEARING	2	
9	20359	SEAL RING	1	
10	63440	BOLT M6X12	4	
11	31159	HEX HD SCREW M10 X 35 CC 8.8	4	
12	16410	SPRING WASHER	4	
13	116088	SPRING SUPPORTING JAWS	2	
14	661267	RING	2	
15	137026	SPRING RING	2	
16	243303R	DEEP GROVE BALL BRG-RR WH AXLE	1	
17	6650	CIRCLIP DIA 50 (INT)	2	
18	6C000662	REAR WHEEL HUB	2	
19	196302	OIL SEAL	2	
20	109892	PROTECTION CUP RR HUB	2	
21	267068	HEX HEAD BOLT M10 X 60 CC 10.9	4	
22	286328	PLAIN WASHER 20X10.2X2	4	
23	231370	SELF BREAKING NUT M10	12	
24	644813	BRAKE PUMP TUBE OF LEFT REAR WHEEL	1	
25A	6C000383	FRAME ASSY SUSPENSION & ENGINE SUPPORT	1	LDX / LDX+
26	231370	SELF BREAKING NUT M10	2	
27	15335	HEX HD NUT M8	6	
28	016408	SPRING WASHER	6	
29	116831	PLAIN METALLIC WASHER (826000828)	6	
30	31119	HEX HD SCREW M8 X 25	6	
31	226596	BUSH FRONT RING FOR ELASTIC SUPPORT	2	
32	267065	SPACER FRONT	2	
33	632148	WHEEL CYLINDER ASSY. FRONT DIA. (25.4 MM)	2	
34	644812	BRAKE PUMP TUBE OF RIGHT REAR WHEEL	1	
35	6C000279	JAW-SUPPORT DISK FOR RIGHT WHEEL WITH AS	1	

86

Print Date: 07-Apr-2022

PLATE-36
REAR SUSPENSION

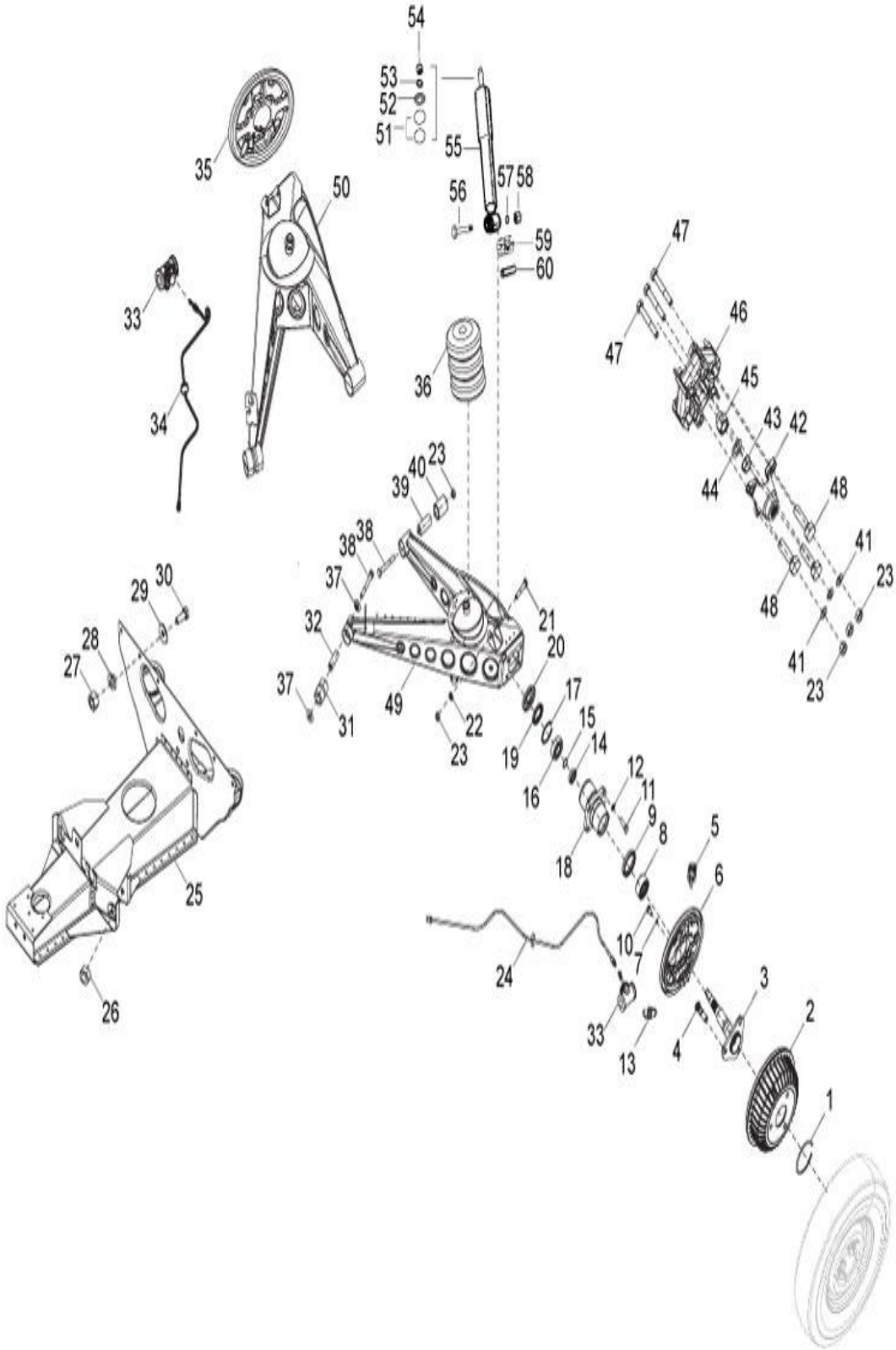
54
53
52
51
55
57 58
56
59
60
35
50
33
34
36
47
46
45
43 42
44
48
41
23
39
40
38
37
32
31
49
22
21
20
17
15
14
19
16
12
11
9
8
18
5
6
10
7
24
33
13
4
3
2
1
29
30
28
27
25
26

87

Print Date: 07-Apr-2022

PLATE-36

REAR SUSPENSION

Fig. No.	Part No.	Description	Qty	Remarks
36A	605003	RUBBER SHOCK ABSORBER	2	LDX / LDX+
37	661266	SHOULDER WASHER	4	
38	643741	HEX HDD BOLT M10 X 80 CL 12.9	4	
39	226662	RING FOR ELASTIC SUPPORT	2	
40	226661	INTERNAL BUSH	2	
41	237246	SHIM WASHER 20X10.2X1	6	
42	587617	ELASTIC JOINT CONNECTION HUB (WHL - SIDE)	2	
43	128633	CONE	6	
44	3068	PLAIN WASHER	12	
45	231370	SELF BREAKING NUT M10	12	
46	643576	FLEXIBLE COUPLING	2	
47	15594	HEX HDD BOLT M10 X 35	6	
48	B024373	ALLEN BOLT M10X65 CL 10.9	6	
49	6C000373	ARM SUB-ASSLY LH REAR	1	LDX / LDX+
50	6C000372	ARM SUB-ASSLY RH REAR	1	LDX / LDX+
51	74414	RUBBER BUSH/BUFFER FOR COUPLING SHOCK ABSORBE	4	
52	6066	PL WASHER 10.5X38X9	2	
53	16410	SPRING WASHER	2	
54	20110	HEX NUT M10	2	
55	136451R	SHOCK ABSORBER REAR	2	
56	267068	HEX HEAD BOLT M10 X 60 CC 10.9	2	
57	286328	PLAIN WASHER 20X10.2X2	2	
58	231370	SELF BREAKING NUT M10	2	
59	157103	BUSH - SHOCK ABSORBER	2	
60	107827	SPACER	1	

88

Print Date: 07-Apr-2022

PLATE-37

STEERING COLUMN AND FRONT SUSPENSION

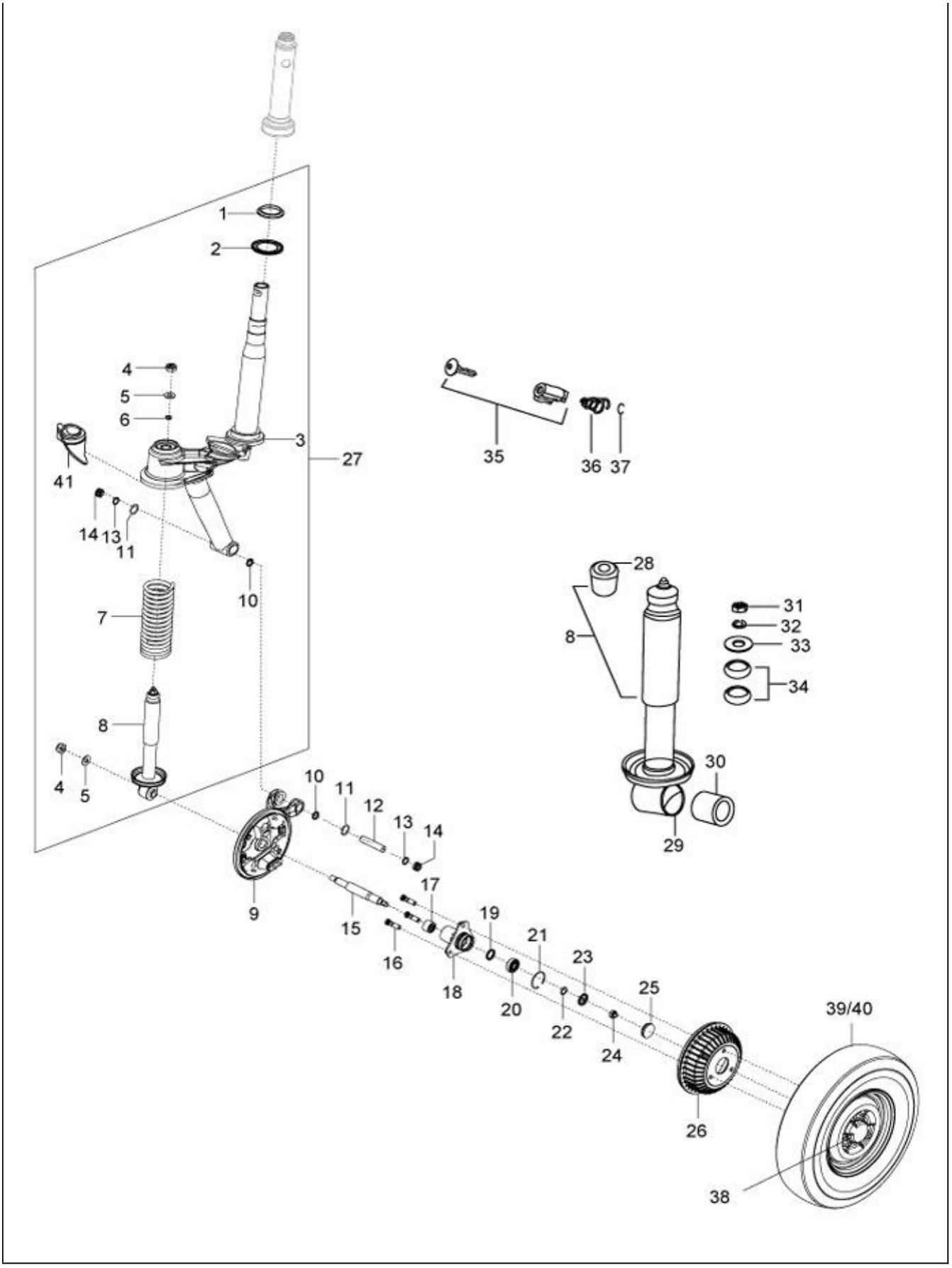
1
2
4
5
6
3
27
41
14
13
11
10
7
8
4
5
35
36
37
28
8
31
32
33
34
30
29
10
11
12
13
14
9
15
17
16
18
19
20
21
22
23
24
25
26
39/40
38

89

Print Date: 07-Apr-2022

PLATE-37

STEERING COLUMN AND FRONT SUSPENSION

Fig. No.	Part No.	Description	Qty	Remarks
1	567993	BEARING RACE LOWER BOTTOM	1	
2	109066	WASHER WITH PROTECTION FOR BEARING	1	
3	B076859	STEERING COLUMN WITH I.P. (501 STD)	1	Bare COLUMN
3	6C000475SP	STEERING COLUMN WITH BKT WITH CARRIER _SPD	1	STEERING COLUMN WITH BKT Wheel CARRIER
4	568095	NYLOCK NUT	2	
5	87067	PLAIN WASHER 30.5X14.3X2	2	
6	16410	SPRING WASHER	1	
7	616931	FRONT SUSPENSION SPRING	1	LDX / LDX+
8	632719	SHOCK ABSORBER , FR TYPE	1	LDX / LDX+
9	6C000275	BRACKET WHEEL CARRIER WITH PI	1	
10	8771	OIL SEAL (18-24-4)	2	
11	6733	O RING	2	
12	137235	STEERING PIN	1	
13	150579	RING FOR HOLDING TYPE J F101 17A	2	
14	107718	ROLLER BUSH	2	
15	643772R	FRONT WHEEL AXLE	1	
16	652520	BOLT FOR AXLE M12 X 40 (VE WHEEL RIM)	3	
17	125289	NEEDLE BEARING, CRANKASE, FRONT WHEEL	1	
18	652521	FR. WHEEL HUB ASSY.	1	
19	136434	OIL SEAL	1	
20	30209R	BALL BEARING FRONT WHEEL HUB	1	
21	107870	ELASTIC RING	1	
22	567473	CIRCLIP DIA. 42 INT. (841004203)	1	
23	180431	COIN WASHER	1	
24	74521	NUT M14 X 1.5	1	
25	107871	CAP	1	
26	152580	BRAKE DRUM APE - 501	1	
27	6C000473SP	FRONT SUSPENSION ASSEMBLY XTRA LD STD	1	Consist. Of Sus.assy,Brake Assy.& Brake drum
28	75708	SILENT BLOCK	1	
29	107732	BUSH FOR SILENT BLOCK	1	
30	566545	RUBBER BUSH (FRT SHOCK ABSORBER) - MODIFIED	1	
31	20110	HEX NUT M10	1	
32	16410	SPRING WASHER	1	
33	6066	PL WASHER 10.5X38X9	1	
34	74414	RUBBER BUSH/BUFFER FOR COUPLING SHOCK ABSORBE	1	

90

Print Date: 07-Apr-2022

PLATE-37

STEERING COLUMN AND FRONT SUSPENSION

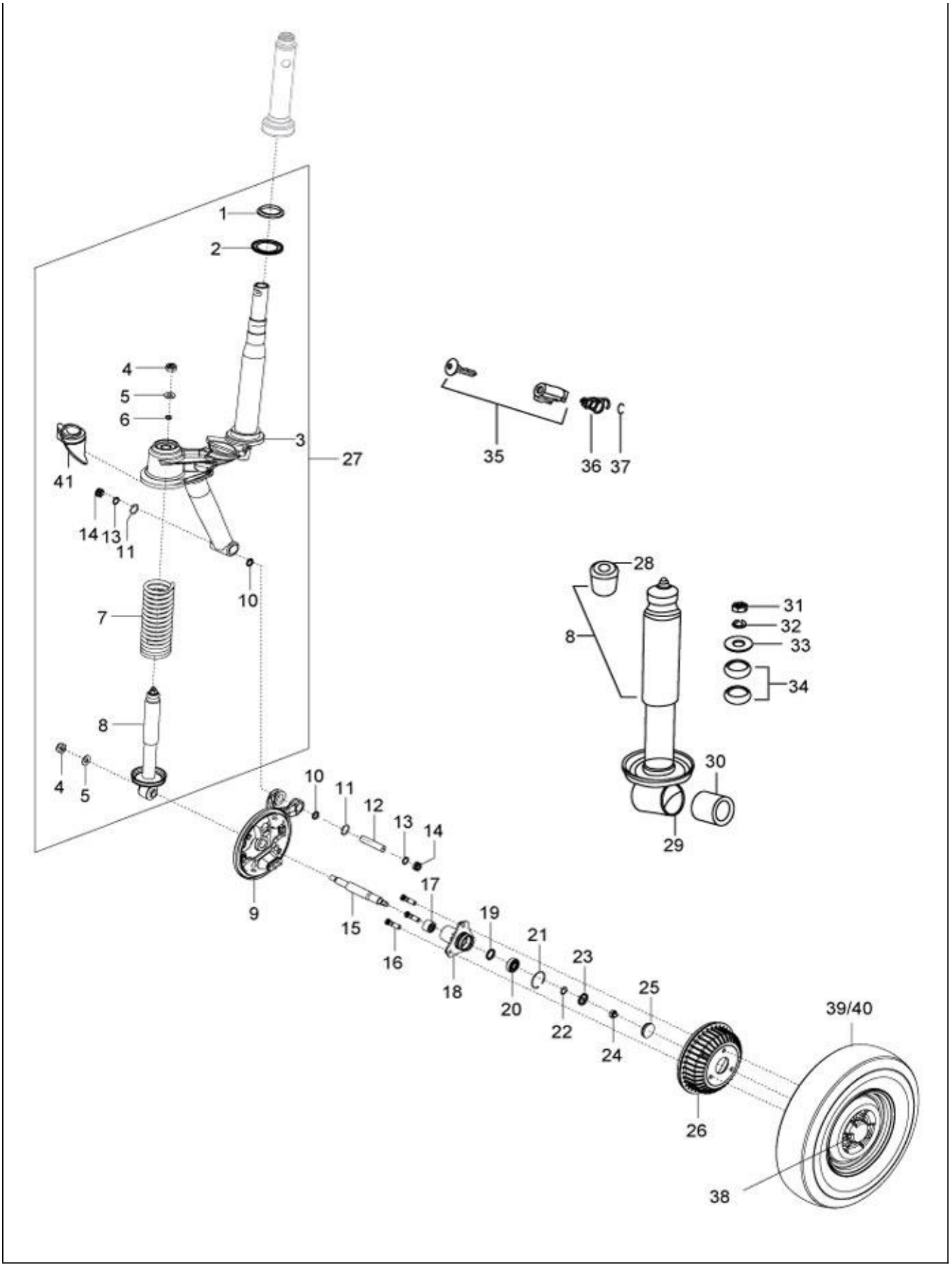
1
2
4
5
6
3
27
41
14
13
11
10
7
8
4
5
35
36
37
28
8
31
32
33
34
30
29
10
11
12
13
14
9
15
17
16
18
19
20
21
22
23
24
25
26
39/40
38

91

Print Date: 07-Apr-2022

PLATE-37

STEERING COLUMN AND FRONT SUSPENSION

Fig. No.	Part No.	Description	Qty	Remarks
35	B001561	STG LOCK ASSLY WITH KEY	1	
36	569150	SPRING; STEERING LOCK (MODIFIED)	1	
37	661231	CIRCLIP STEERING LOCK DIA 16 (INT)	1	
38	644973R	WHEEL RIM ASSY.	3	(Qty. front & Rear)
39	587971	TYRE 4.50 X 10 8 PR	3	(Qty. front & Rear)
40	151924	INNER TUBE TYRE 4.5 X 10 INCH	3	(Qty. front & Rear)
41	109265	SPLASH GUARD DUST COVER	1	

92

Print Date: 07-Apr-2022

PLATE-38
HANDLE BAR AND CONTROL

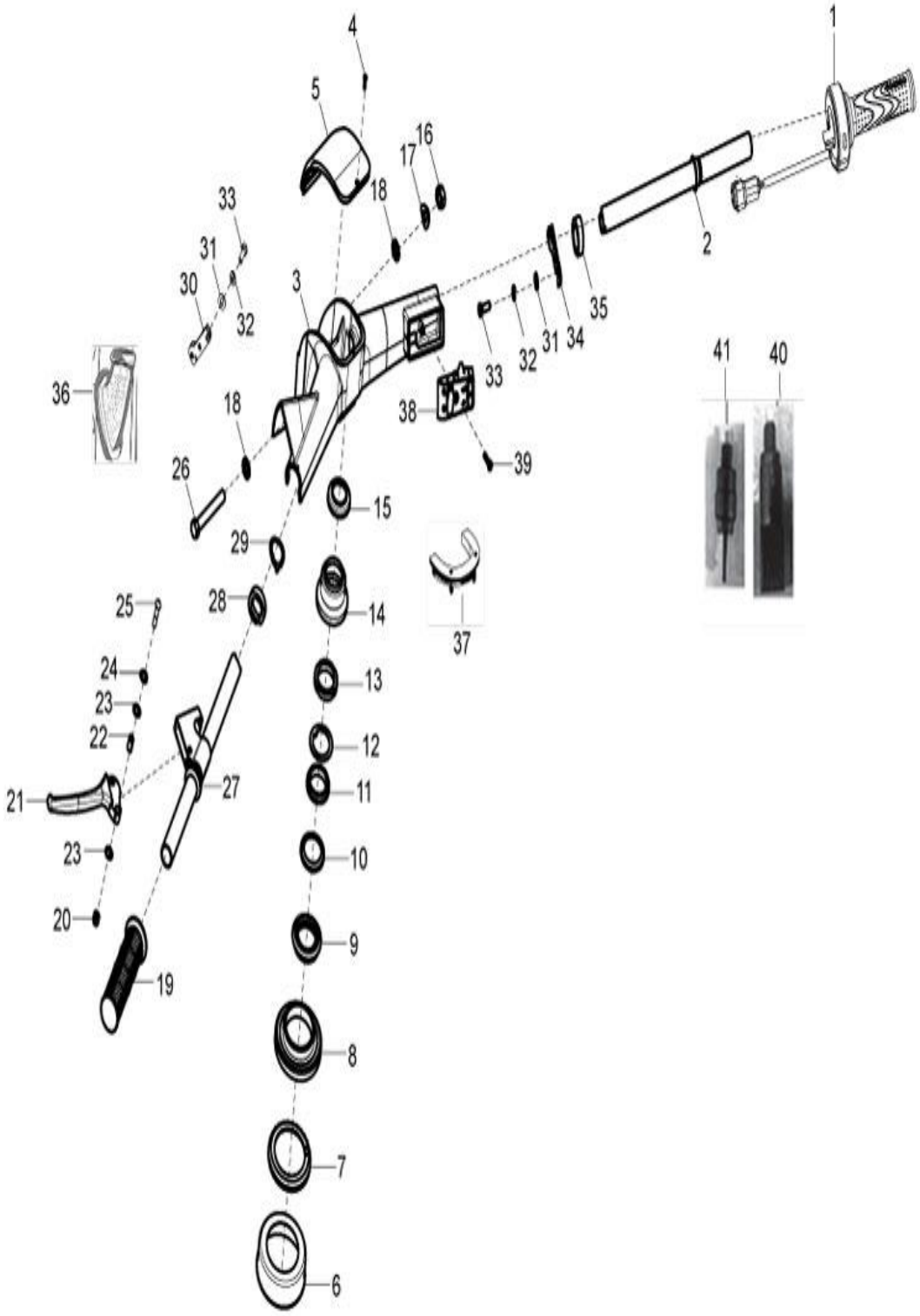
1
2
3
4
5
6
7
8
9
10
11
12
13
14
15
16
17
18
19
20
21
22
23
24
25
26
27
28
29
30
31
32
33
34
35
36
37
38
39
40
41

93

Print Date: 07-Apr-2022

PLATE-38

HANDLE BAR AND CONTROL

Fig. No.	Part No.	Description	Qty	Remarks
1	6D000671R	ELECTRONIC HAND THROTTLE	1	
2	6C000265	TUBE FOR HANDLE BAR	1	
3	6C000273	HANDLE BAR BODY	1	
4	632158	CSK HEAD SCREW	1	
5	B073817	COVER	1	
6	109064	DUST COVER	1	
7	6C000191	LOWER BALL CAGE (VE)	1	
8	567992	BEARING RACE LOWER TOP	1	
9	567990	BEARING RACE UPPER BOTTOM	1	
10	6C000190	UPPER BALL CAGE (VE)	1	
11	567991	BEARING RACE UPPER TOP	1	
12	108873	STOP WASHER FOR HOLDING	1	
13	108874	SECURING RING NUT	1	
14	604758	PROTECTION	1	
15	604759	RUBBER CAP STEERING COLUMN (N.I.)	1	
16	20110	HEX NUT M10	1	
17	B041653	SPRING WASHER	1	
18	16626	PLAIN WASHER (18X10.5X2)	2	
19	B073848	HANDLE BAR GRIP - LH	1	
20	12138	NYLOCK NUT M6	1	
21	6A001637	LEVER, CLUTCH CONTROL	1	
22	125181	SPACER	1	
23	16620	PLAIN WASHER	2	
24	16319	BENT SPRING WASHER	1	
25	1E002723	CYL. HEAD SCREW, WITH CROSS MOULD	1	
26	30104	MOUNTING BOLT M10 X 75	1	
27	6A000375	GEAR CONTROL TUBE ASSY WITH CL. PA	1	
28	109404	WASHER OF RABBET(41737)	1	
29	60565	SPRING WASHER	1	
30	109775	GEAR CONTROL LEVER S/A	1	
31	3055	PLAIN WASHER M5	1	
32	016406	SPRING WASHER	1	
33	31089	HEX HEAD SCREW M6X18 CL 8.8	1	
34	B079248	ACCELERATOR TUBE SUPPORT BKT RH	1	
35	587904	SINTERED WASHER HANDLE BAR (41769)	1	

94

Print Date: 07-Apr-2022

PLATE-38
HANDLE BAR AND CONTROL

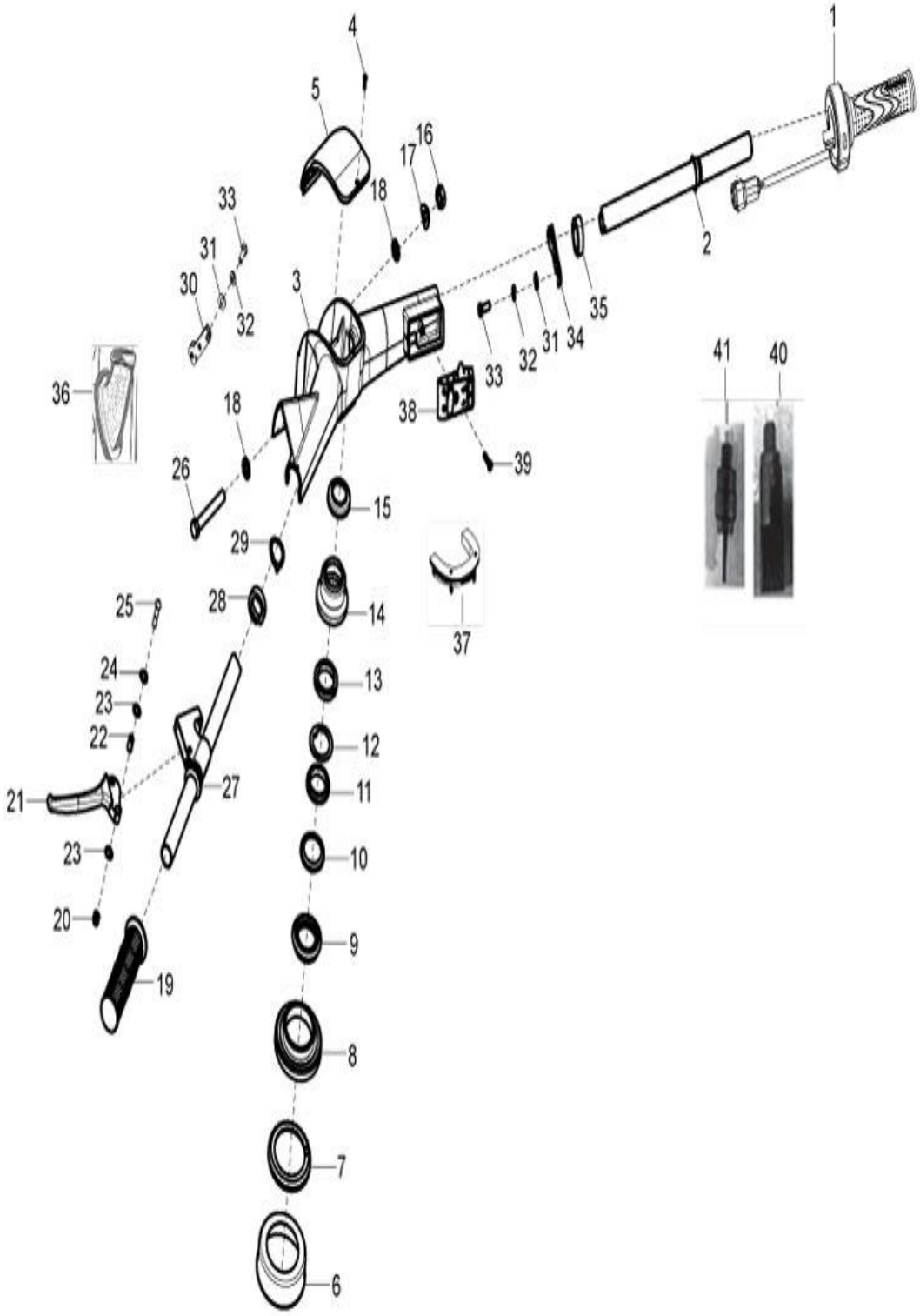
1
2
3
4
5
6
7
8
9
10
11
12
13
14
15
16
17
18
19
20
21
22
23
24
25
26
27
28
29
30
31
32
33
34
35
36
37
38
39
40
41

95

Print Date: 07-Apr-2022

PLATE-38

HANDLE BAR AND CONTROL

Fig. No.	Part No.	Description	Qty	Remarks
36	109227	PROTECTION GROMMET	1	
37	126902	PROTECTION COLLAR CABLE	1	
38	B073366R	HANDLE BAR SWITCH ASSLY-NEW	1	
39	15640	SCREW SECURING SWITCH	1	
40	642032	PUSH BUTTON-CLUTCH	1	
41	640762	PUSH BUTTON REVERSE	1	
42	KIT96033R	MODIFIED BALL KIT FOR 3WH (WHITE)	1	NI
42	KIT96033R	MODIFIED BALL KIT FOR 3WH (WHITE)	1	NI
43	KIT95021R	STEERING CONE SET (UPPER)	1	NI
44	KIT95022R	STEERING CONE SET (LOWER)	1	NI
45	KIT96016R	KIT OF STEERING CONE & BALL KIT	1	NI
46	KIT940003R	STEERING PIN KIT WITH O RING	1	NI

96

Print Date: 07-Apr-2022

PLATE-39

BRAKE - TANDEM MASTER CYLINDER, BRAKE PIPE AND HAND BRAKES

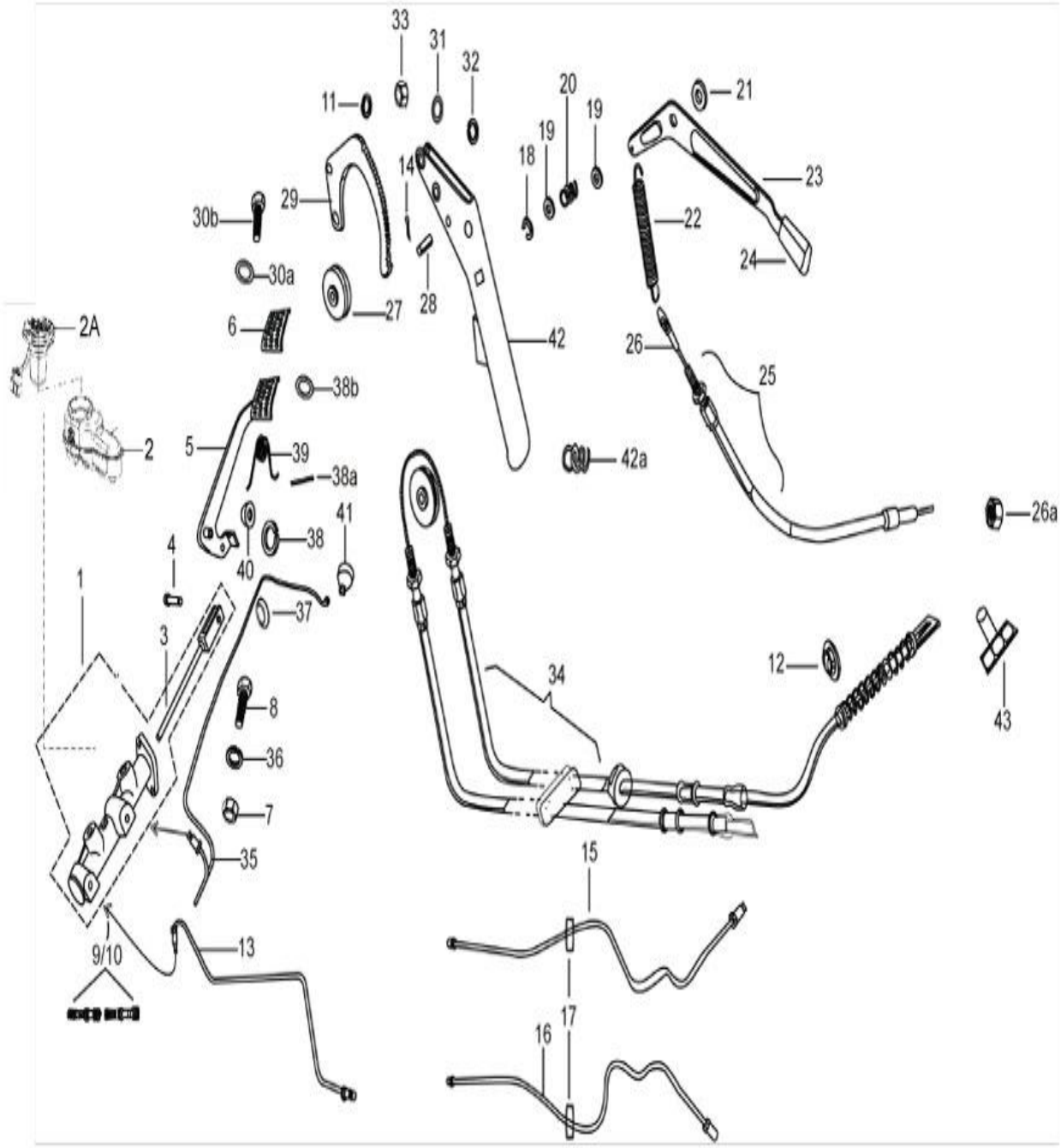
33
31
32
11
20
19
21
18
19
14
23
29
22
30b
24
30a
28
27
2A
6
42
26
25
38b
2
5
39
42a
38a
26a
41
38
4
40
1
37
3
12
34
43
8
36
7
35
15
9/10
13
17
16

97

Print Date: 07-Apr-2022

PLATE-39

BRAKE - TANDEM MASTER CYLINDER, BRAKE PIPE AND HAND BRAKES

Fig. No.	Part No.	Description	Qty	Remarks
1	6C000443	INTEGRATED RESERVOIR & TMC	1	
1.1	6C000468	RESERVOIR KIT TMC	1	
1.2	6C000469	RESERVOIR CAP	1	
2	6C000468	RESERVOIR KIT TMC	1	Under Development
2A	6C000469	RESERVOIR CAP	1	Under Development
3	587702	PUSH ROD	1	
5	6C000124	BRAKE PEDAL WITH FOOT REST ASSLY	1	
6	567461	RUBBER PROTECTION FOR PEDAL	1	
7	20108	HEX NUT M8	2	
8	31122	HEX HD. SCREW M8X30 CL 8.8	2	
8	016408	SPRING WASHER	2	
9	B077155	MAJOR KIT TMC	1	
10	B077156	MINOR KIT TMC	1	
11	016408	SPRING WASHER	1	
12	604502	CUP RETAINING SPRING (41733)	2	
13	B076880	BRAKE TUBE FOR REAR WHEELS	1	LDX / LDX+
14	12761	SPLIT PIN	1	
15	644813	BRAKE PUMP TUBE OF LEFT REAR WHEEL	1	for Dx (D+3)
16	644812	BRAKE PUMP TUBE OF RIGHT REAR WHEEL	1	for Dx (D+3)
17	116971	RUBBER GROMMET	2	
18	5969	CIRCLIP DIA 9 E TYPE	1	
19	6173	METALLIC PLAIN WASHER (808001026)	2	
20	108785	SPRING	1	
21	B042317	SPACER-RC LEVER	1	
22	567690	REVERSE GEAR COUPLING SPRING	1	
23	B076455	LEVER S/ASSLY. REVERSE	1	
24	604717	KNOB FOR R.C.	1	
25	6A000582	ASSY REVERSE CABLE D5S	1	LDX / LDX+
26	6A000937	CABLE REVERSE GEAR WITH TERMINAL	1	LDX / LDX+
26A	20105	PLAIN NUT M5	2	
27	567898	PULLEY FOR HAND BRAKE	1	
28	567899	CLEVIS PIN	1	
29	B042794	RATCHET , HAND BRAKE CONTROL	1	
30A	140728	PLAIN WASHER 8.5 X 24 X 3	6	
30B	31118	SCREW M8X20	1	

98

Print Date: 07-Apr-2022

PLATE-39

BRAKE - TANDEM MASTER CYLINDER, BRAKE PIPE AND HAND BRAKES

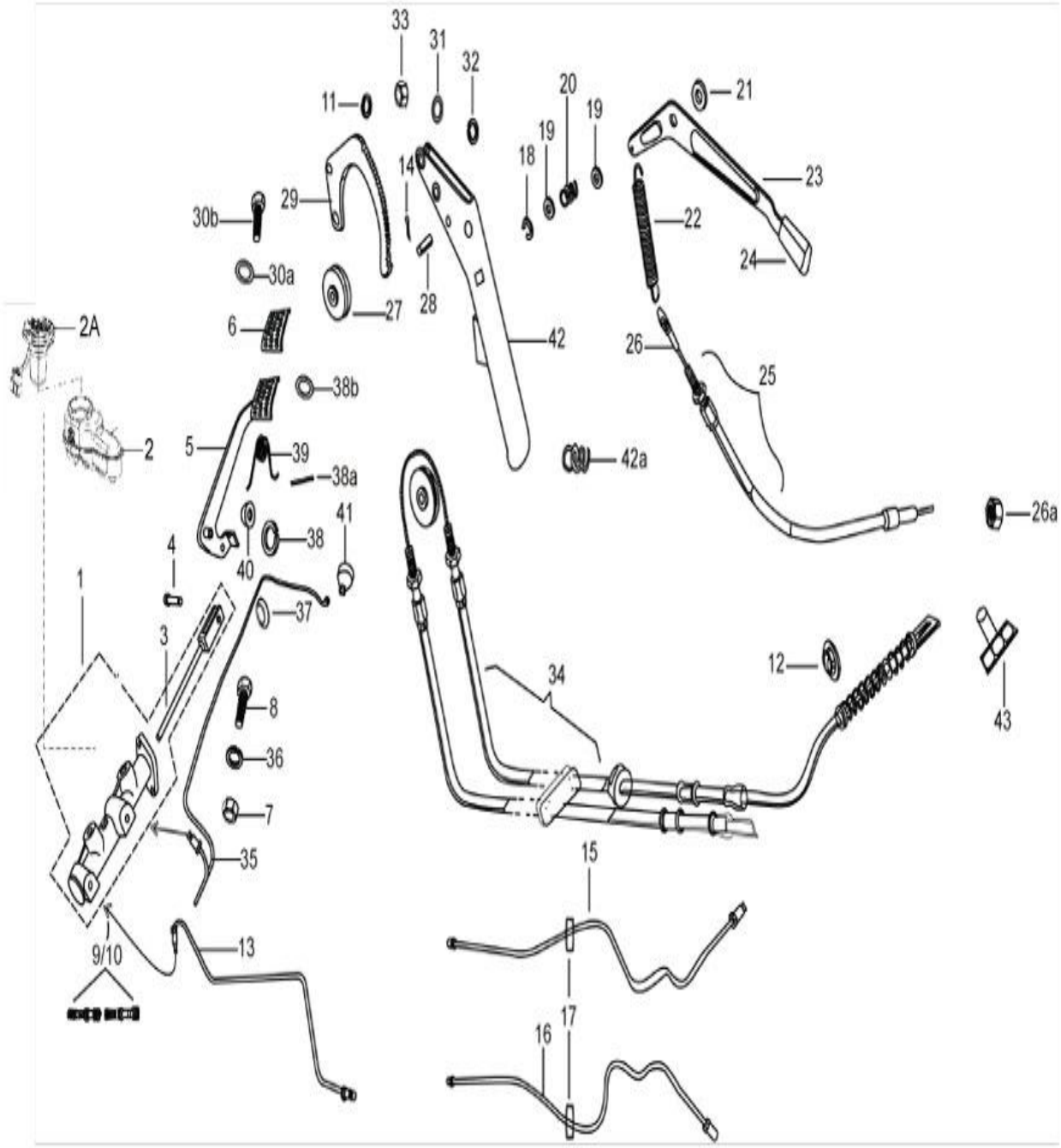
33
31
32
11
20
19
21
18
19
14
23
29
22
30b
24
30a
28
27
2A
6
42
26
25
38b
2
5
39
42a
38a
26a
41
38
4
40
1
37
3
12
34
43
8
36
7
35
15
9/10
13
17
16

99

Print Date: 07-Apr-2022

PLATE-39

BRAKE - TANDEM MASTER CYLINDER, BRAKE PIPE AND HAND BRAKES

Fig. No.	Part No.	Description	Qty	Remarks
31	6173	METALLIC PLAIN WASHER (808001026)	1	
31	13812	METALLIC PLAIN WASHER	1	
32	6411	EXT CIRCLIP DIA 11	1	
33	20108	HEX NUT M8	1	
34	660341	PARKING BRAKE TRANS. SUB. ASSY.	1	
35	568161	TUBE BETWEEN TMC & FRT WHEEL	1	
36	016408	SPRING WASHER	2	
37	6414	CIRCLIP DIA. 14 (EXT)	1	
38	843000809	CIRCLIP DIA.8(EXT) TYPE C	1	
38A	567920	SPLIT PIN	1	
38B	3058	PLAIN WASHER 15X8.4X1.5	1	
39	587928	FOOT BRAKE PEDAL SPRING	1	
40	229524	WASHER 21X14.3X2	1	
41	138237	CAP	1	
42	567746G1	HAND BRAKE LEVER (WITH POWDER COATING)	1	
43	119278	TERMINAL	1	

100

Print Date: 07-Apr-2022

PLATE-40
Control Cables

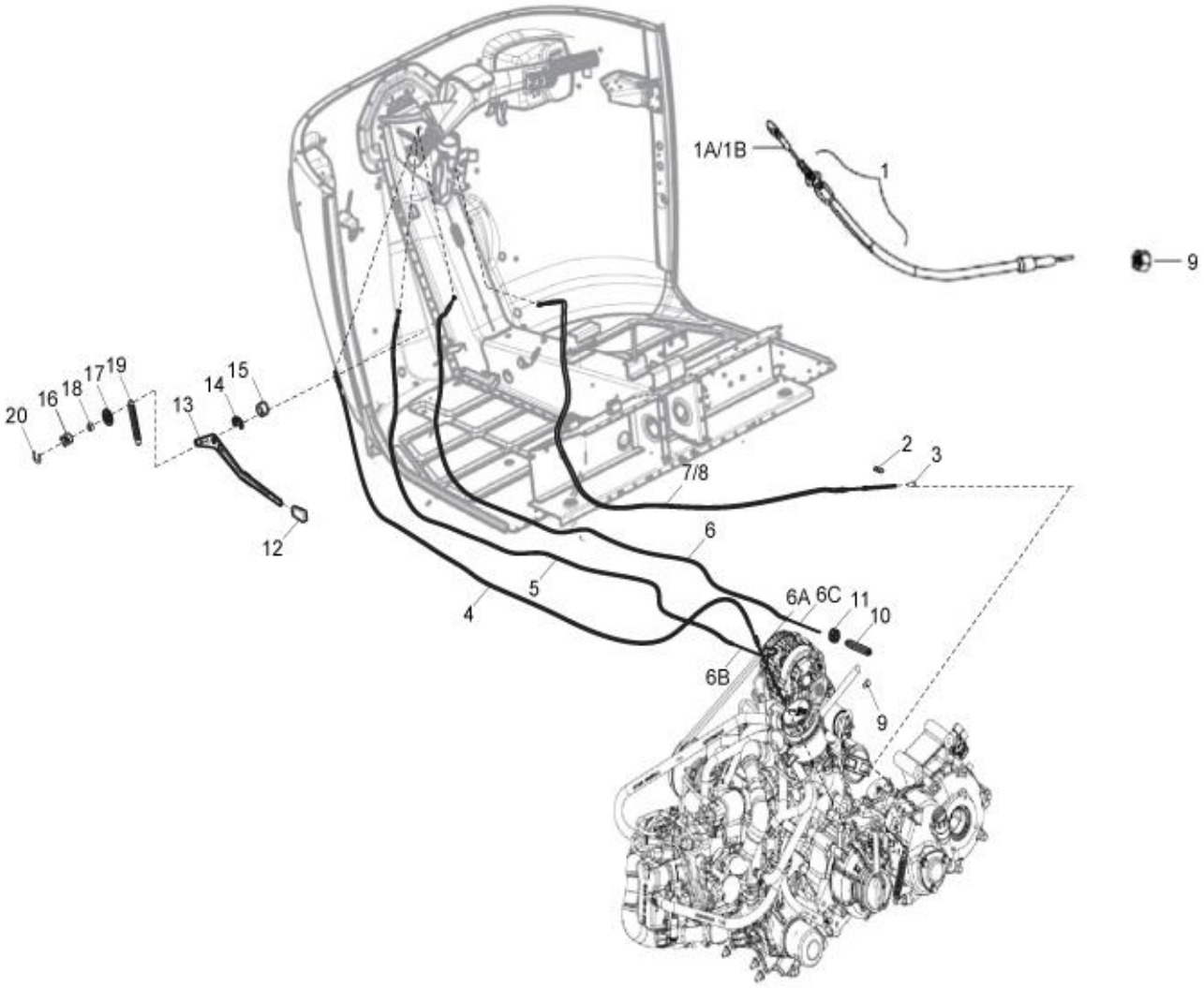
1A/1B
1
9
20
16
18
17
19
14
15
13
12
2
3
7/8
6
5
4
6A
6C
11
10
6B
9

101

Print Date: 07-Apr-2022

PLATE-40

Control Cables

Fig. No.	Part No.	Description	Qty	Remarks
1	6A000884	FLEXIBLE TRANS. FOR ODOMETER CONTROL	1	LDX / LDX+
1B	6A000883	FLEXIBLE TRANSMISSION CABLE WITH WASHER	1	LDX / LDX+, Inner
2	604781	ROLLER	1	
3	604782	NUT	1	
4	6A001047R	CLUTCH CONTROL TRANSMISSION ASS	1	For Aluminium Clutch LDX / LDX+
5	B076306	SHIFT CONTROL TRANSMISSION ASSLY NO.1	1	LDX / LDX+
6	B076307	SHIFT CONTROL TRANSMISSION ASSLY NO.2	1	LDX / LDX+
6A	587803	WIRE, GEAR CONTROL WITH TERMINAL	1	Inner for both gear control cable for Dx (D+3)
6B	660345	SHIFT CONTROL CABLE WITH TERMINAL	1	Inner for LDX / LDX+
6C	660348	SHIFT CONTROL CABLE WITH TERMINAL FOR TRANS.ASSLY NO 2	1	Inner for LDX / LDX+
7	6A000937	CABLE REVERSE GEAR WITH TERMINAL	1	LDX / LDX+
8	6A000582	ASSY REVERSE CABLE D5S	1	LDX / LDX+
9	20105	PLAIN NUT M5	2	
10	118806	PROTECTION BELLOW	2	
11	20106	HEX NUT M6	1	
12	604717	KNOB FOR R.C.	1	
13	B076455	LEVER S/ASSLY. REVERSE	1	
14	120238016	BOLT FOR SCREW TERMINAL	2	
15	B042317	SPACER-RC LEVER	1	
16	108785	SPRING	1	
17	6173	METALLIC PLAIN WASHER (808001026)	1	
18	20106	HEX NUT M6	1	
19	567690	REVERSE GEAR COUPLING SPRING	1	
20	5969	CIRCLIP DIA 9 E TYPE	1	

102

Print Date: 07-Apr-2022

PLATE-41

ELECTRICAL DEVICES / HEAD LAMP & TAIL LAMP ASSLY.

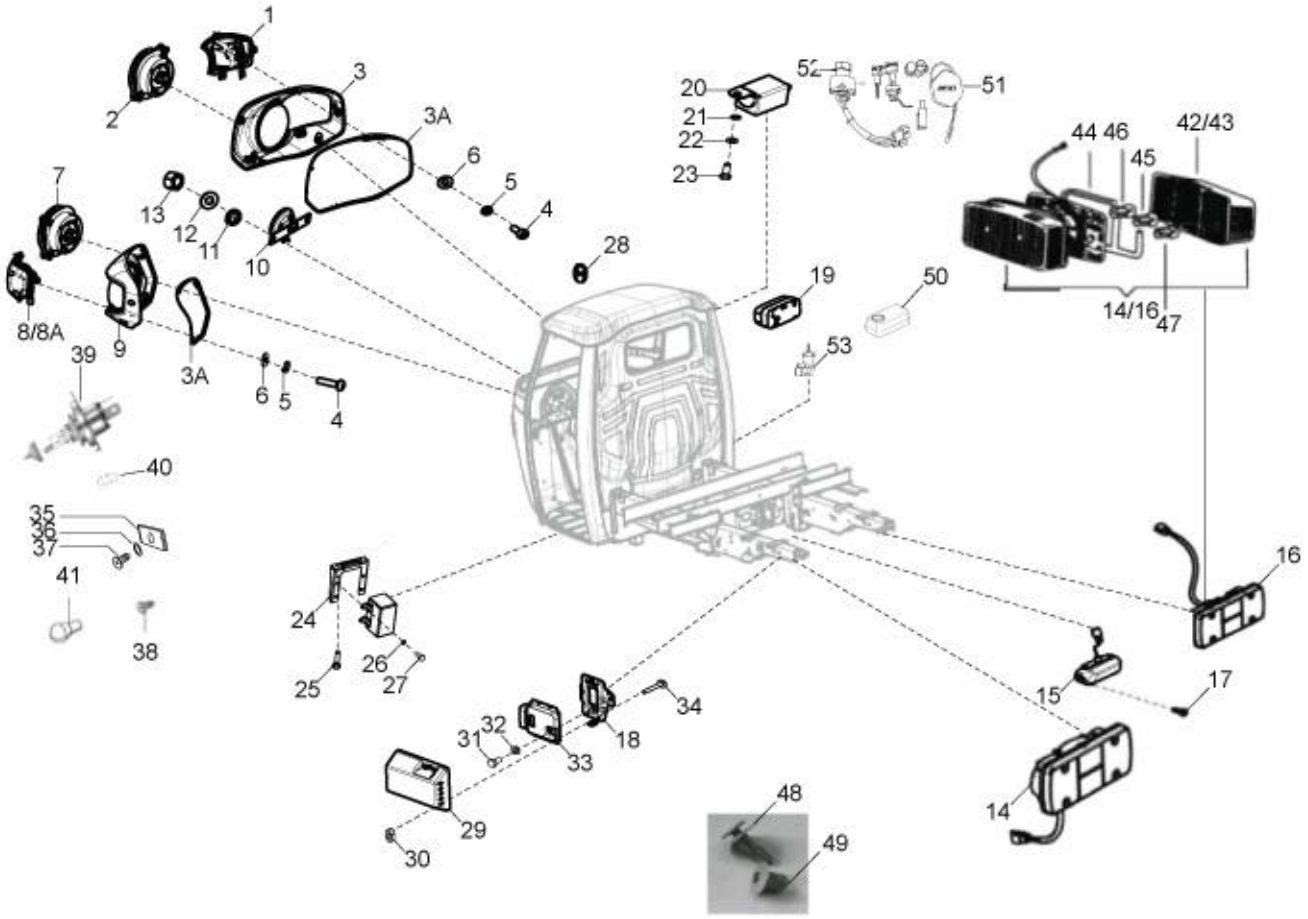
1
2
3
3A
6
5
4
7
13
12
11
10
28
8/8A
9
3A
6
5
4
39
40
35
36
37
41
38
20
21
22
23
52
51
44 46
42/43
45
19
50
14/16
47
53
16
24
25
26
27
15
17
34
31
32
33
18
29
30
14
48
49

103

Print Date: 07-Apr-2022

PLATE-41

ELECTRICAL DEVICES / HEAD LAMP & TAIL LAMP ASSLY.

Fig. No.	Part No.	Description	Qty	Remarks
1	6D000146R	FRONT DIRECTION INDICATORS RH	1	
1.A	B078272	BLINKER HOUSING (RH)-(HOUSING + GLASS)	1	
2	6D000144R	HEAD LAMP ASSLY - RH (NUOVO)	1	
3	B076000	HEAD LAMP COVER RH	1	
3A	B076191	HL BEZEL BEADING	2	
4	661925	PHILIP PAN HEAD SCREW (M5 X 0.8 X 1.6)	6	
5	16405	SPRING WASHER M5	6	
6	6078	PLAIN WASHER 12 X 5.2 X 1	6	
7	6D000143R	HEAD LAMP ASSLY LH - NUOVO	1	
8	6D000145R	FRONT DIRECTION INDICATORS LH	1	
8A	B078274	BLINKER HOUSING (LH)-(HOUSING + GLASS)	1	
9	B075999	HEAD LAMP COVER LH	1	
10	B074033	HORN ASSLY(DIA 70)	1	
11	3056	PLAIN WASHER M6 OD12	2	
12	016406	SPRING WASHER	2	
13	20106	HEX NUT M6	2	
14	B024537R	TAIL LAMP ASSLY - LH	1	
15	150915R	REGISTRATION PLATE LAMP ASSY	1	
16	643705R	TAIL LAMP ASSY. RH	1	
17	15727	PAN SELF TAPPING SCREW	2	
18	B074323	ASSY, ECU SUPPORT	1	
19	150041R	CABIN LIGHT ASSY. (W/O BULB)	1	
20	6D000305	FLASHER RELAY (BG LI-IN)	1	
21	12546	PLAIN WASHER / MULTI TOOTH LOCK WASHER M5	2	
22	3055	PLAIN WASHER M5	1	
23	31057	HEX HEAD SCREW M5 X 14 CL 8.8	2	
24	6D000265	BKT, FUSE BOX MOUNTING FRONT ASSEMBLY	1	
25	B077219	M6 X 15 FLANGED BOLT	2	
26	3058	PLAIN WASHER 15X8.4X1.5	8	
27	31116	HEX HD. SCREW M8X16	8	
28	20105	PLAIN NUT M5	2	
29	B074322	COVER, ECU	1	
30	B075855	M4 HEX FLANGE NUT	8	
31	568096	SCREW HEAD CAP SCREW M8X20 (819082037)	3	
32	016408	SPRING WASHER	3	

104

Print Date: 07-Apr-2022

PLATE-41

ELECTRICAL DEVICES / HEAD LAMP & TAIL LAMP ASSLY.

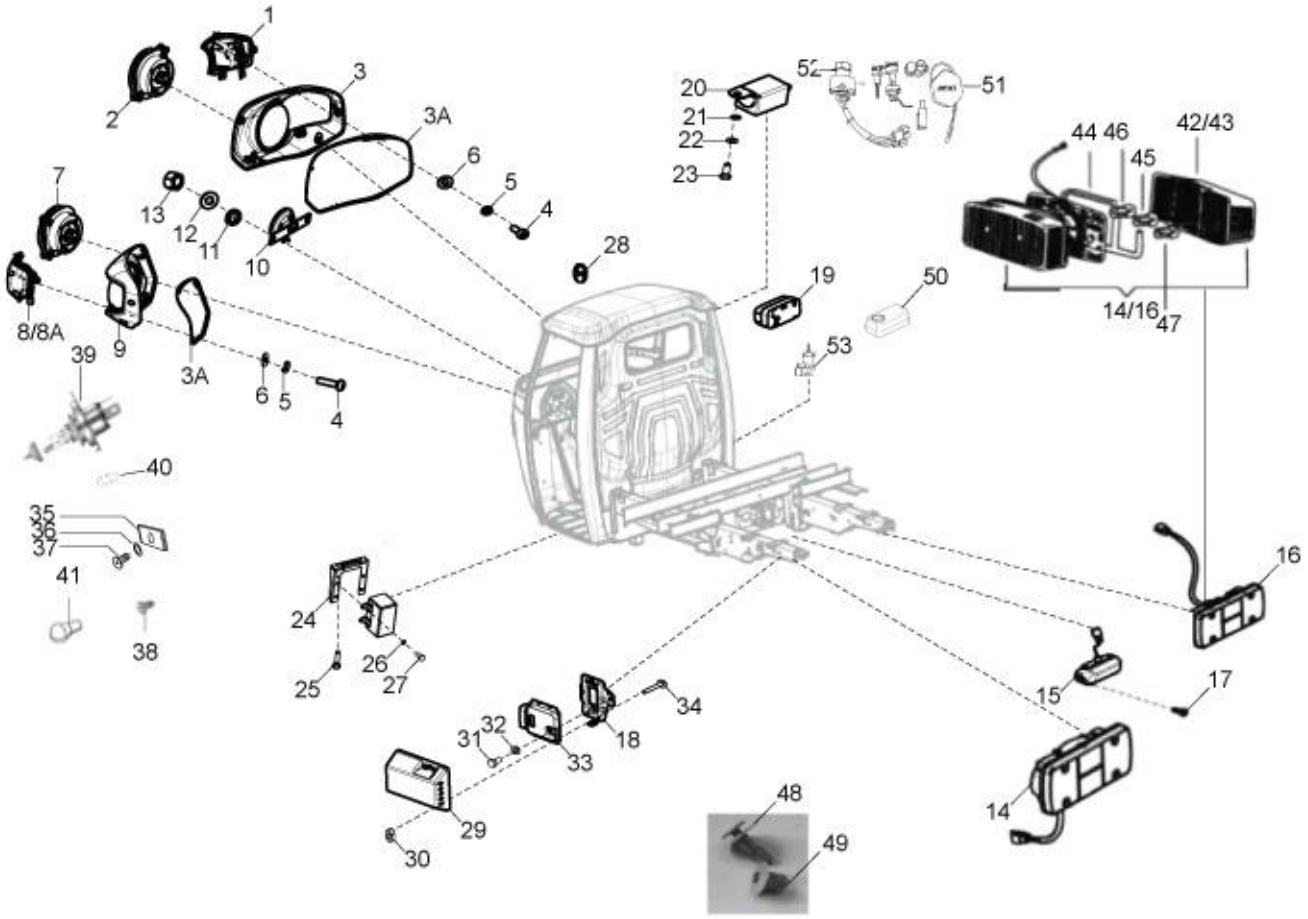
1
2
3
3A
6
5
4
7
13
12
11
10
28
8/8A
9
3A
39
6
5
4
40
35
36
37
41
38
20
21
22
23
52
51
44 46
42/43
45
19
50
14/16
47
53
16
24
25
26
27
15
17
34
31
32
33
18
29
30
14
48
49

105

Print Date: 07-Apr-2022

PLATE-41

ELECTRICAL DEVICES / HEAD LAMP & TAIL LAMP ASSLY.

Fig. No.	Part No.	Description	Qty	Remarks
33	A01G190006	ECU	1	
34	B074327	BOLT	4	Not Serviceable
35	8080	SPRING PLATE	4	
36	3055	PLAIN WASHER M5	4	
37	660168	PAN SELF TP. SCREW 10 SGX13AB	4	
38	B074539	PHILIPS COUNTER HEAD SCREW	6	
39	B078286R	HS1_BULB (12 V _35/35W	2	
40	567593	BULB 12V 5W / LAMP 4W	2	
41	925581	INDICATOR LIGHT BULB 12V 21W AMBER COLOUR	2	
42	920083	TAIL LAMP LENSE LH WITH HARDWARE & GASKET	2	
43	920084	TAIL LAMP LENSE RH WITH HARDWARE & GASKET	2	
44	925603	PACKING	2	
45	181746	INDICATOR BULB 12V 10W	2	
45	925581	INDICATOR LIGHT BULB 12V 21W AMBER COLOUR	2	
46	567700	BULB 10/5W (STOP LIGHT)	2	
47	181747	REVERSE LAMP BULB 12V 5W	2	
48	B076606	GROMMET	4	
49	B076605	PIN	4	
50	B073715	CABIN LAMP	1	
51	643500	LOCK SET WITH KEYS (PU) (COMMON KEY)	1	
52	B024741	STARTER/IGN SWITCH ASSLY WITH KEY	1	
53	B000744	SWITCH, BRAKE	1	
54	B074491	ENGINE COMPARTMENT LAMP WITH PIGTAIL (UP)	1	

106

Print Date: 07-Apr-2022

PLATE-42
Wiper motor

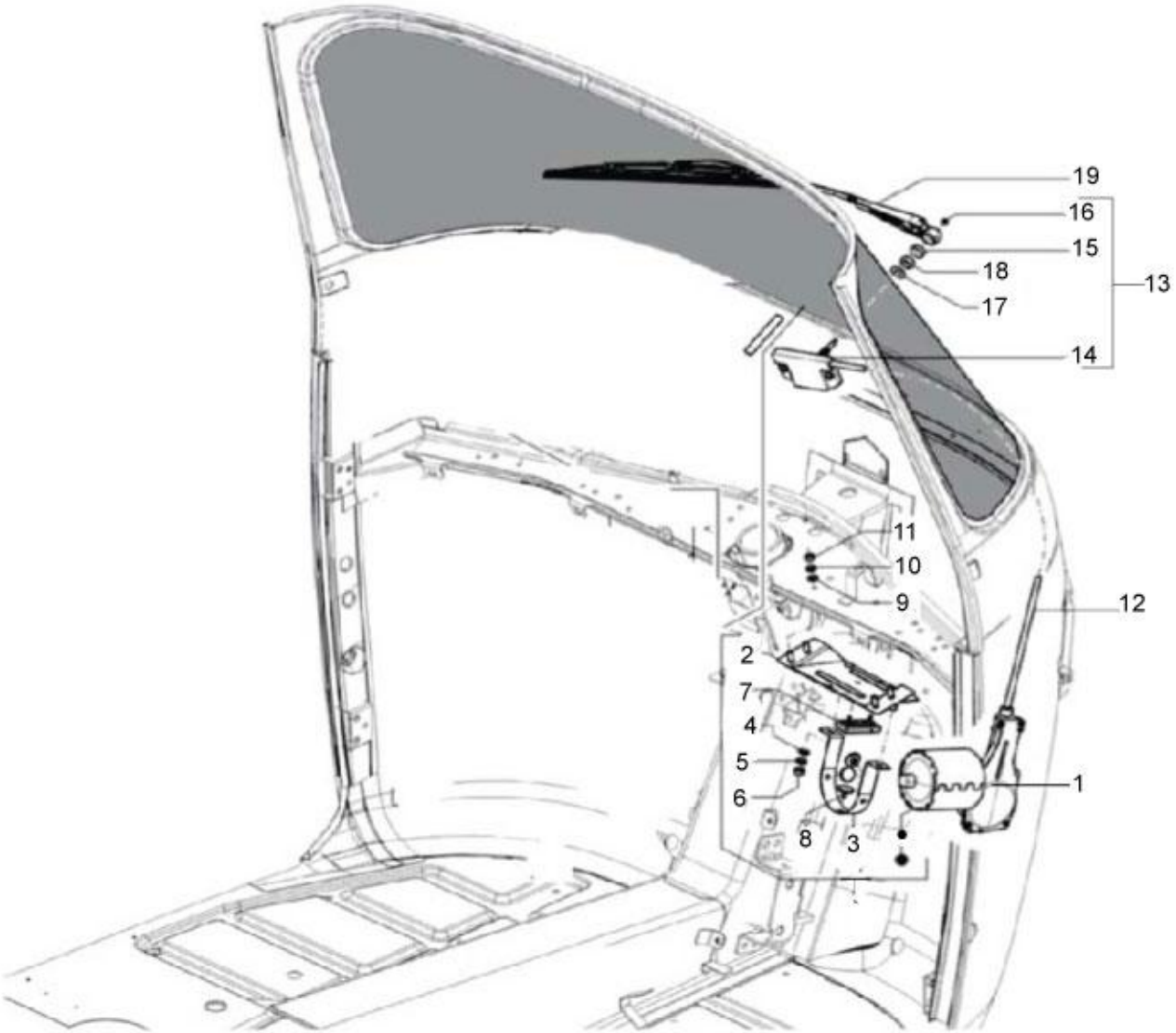
19
16
15
18
17
13
14
11
10
9
12
2
7
4
5
6
8
3
1

107

Print Date: 07-Apr-2022

PLATE-42

Wiper motor

Fig. No.	Part No.	Description	Qty	Remarks
1	632995	WIPER MOTOR ASSY. WITH MTG. BKT.	1	
2	569166	WIPER MOTOR MOUNTING BRACKET	1	
3	569177	STRAP ASSY FOR WIPER MOTOR (N.I.)	1	
4	016406	SPRING WASHER	2	
5	3056	PLAIN WASHER M6 OD12	2	
6	20106	HEX NUT M6	2	
7	569178	RUBBER PAD FOR WIPER MOTO (N.I.)	1	
9	3056	PLAIN WASHER M6 OD12	4	
10	016406	SPRING WASHER	4	
11	20106	HEX NUT M6	4	
12	B076303	BUNDY TUBE (MOTOR TO WHEEL BOX)	1	
12A	604506	BUNDY TUBE OUTER	1	NI
13	B076304	WHEEL BOX ASSY. (MOD.)	1	
14	NS	NOT SERVICEABLE	1	NS
15	NS	NOT SERVICEABLE	1	NS
16	569165	DOME NUT	1	
17	6173	METALLIC PLAIN WASHER (808001026)	1	
18	20106	HEX NUT M6	1	
19	632292	WIPER ARM & BLADE ASSY	1	
20	925571	CABLE RACK (033200/PGO)	1	NI

108

Print Date: 07-Apr-2022

PLATE-43
Wiring Harness

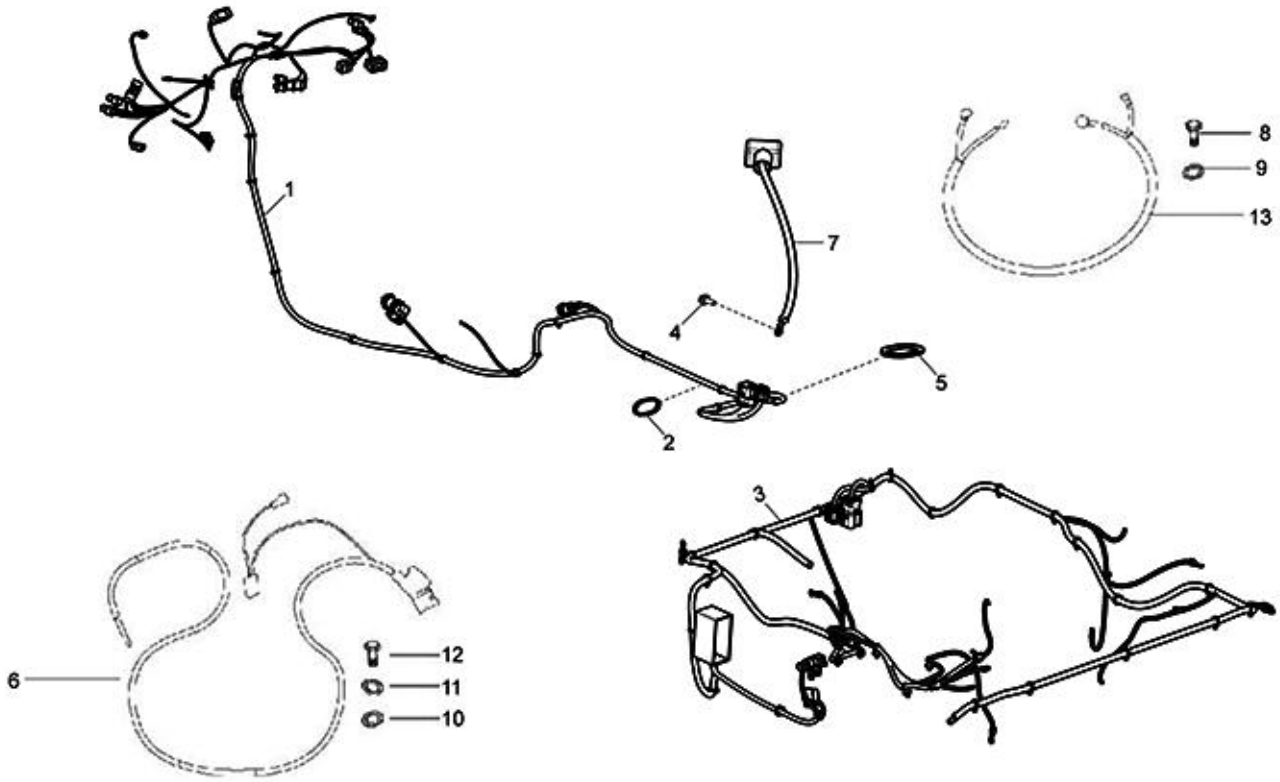
1
2
3
4
5
6
7
8
9
10
11
12
13

109

Print Date: 07-Apr-2022

PLATE-43

Wiring Harness

Fig. No.	Part No.	Description	Qty	Remarks
1	6D000257	WIRING HARNESS, I.P D5S BSVI	1	For Auto+ (D+5) &Auto DXL/ LDX/LDX+/DV
1	6D001066	WIRING HARNESS, INST. PANEL	1	App. for ignition switch & ECU RH Side
2	6D000251	GROMMET(60 X 80 MM) FOR W/HS	1	
3	6D000508	WIRNG HARNESS, MAIN (PREMIER SEAL)	1	For LDX+Pigtail must be order of Sr.no-26&27
3	6D001063	WIRING HARNESS, MAIN	1	App. Only for ignition switch RH Side
3	6D001052	WIRING HARNESS, MAIN	1	App. for ignition switch & ECU RH Side
4	B077219	M6 X 15 FLANGED BOLT	2	
5	6D000227	GROMMET	1	
6	6D000258	CABLE HARNESS + VE (D+5)	1	For Auto+ (D+5) &Auto DXL/ LDX/LDX+
7	644838R	BATTERY CABLE -VE	1	
8	31116	HEX HD. SCREW M8X16	1	
9	3058	PLAIN WASHER 15X8.4X1.5	1	
10	016406	SPRING WASHER	1	
11	3056	PLAIN WASHER M6 OD12	1	
12	31088	HEX HD SCREW M6 X 16 CL 8.8 (811061623)	1	
13	567484	STARTER CABLE GROUP	1	
14	B075178R	PIG TAIL CABIN LAMP (PASS UPGRADE)	1	NI
14	B073320R	PIG TAIL- CABIN LAMP (NEW)-PASSENGER	1	NI
15	6D000499	30A MAXIVAL FUSE GREEN	1	NI
16	6D000500	40A/30A POWER RELAY NO/NC	1	NI
17	6D000483	20A MICRO RELAY	1	NI
18	6D000482	30A MICRO RELAY	1	NI
19	6D000484	30A MINIVAL INLINE FUSE GREEN	1	NI
20	6D000480	5A MINIVAL FUSE BIEGE	10	NI
21	6D000479	10A MINIVAL FUSE RED	10	NI
22	6D000481	15A MINIVAL FUSE BLUE	10	NI
23	6D000478	20A MINIVAL FUSE YELLOW	10	NI
24	6D000667	PIGTAIL, VEHICLE SPEED SENSOR	1	NI
25	6D000930	PIGTAIL LICENSE PLATE LAMP	1	LDX+ DSL
26	6D000931	PIGTAIL TAIL LAMP LH	1	LDX+ DSL
27	6D000932	PIGTAIL TAIL LAMP RH	1	LDX+ DSL
28	6D000874	FEED PUMP AND RADIATOR FAN CLPR SENSOR	1	NI
29	6D000873	WATER IN FUEL SENSOR PIGTAIL	1	NI
30	6D000872	TEMP SEN AND CRANK SEN POSITION PIGTAIL	1	NI
31	6D000877	RAIL PRESURE SENSOR COUPLER PIGTAIL	1	NI

110

Print Date: 07-Apr-2022

PLATE-43
Wiring Harness

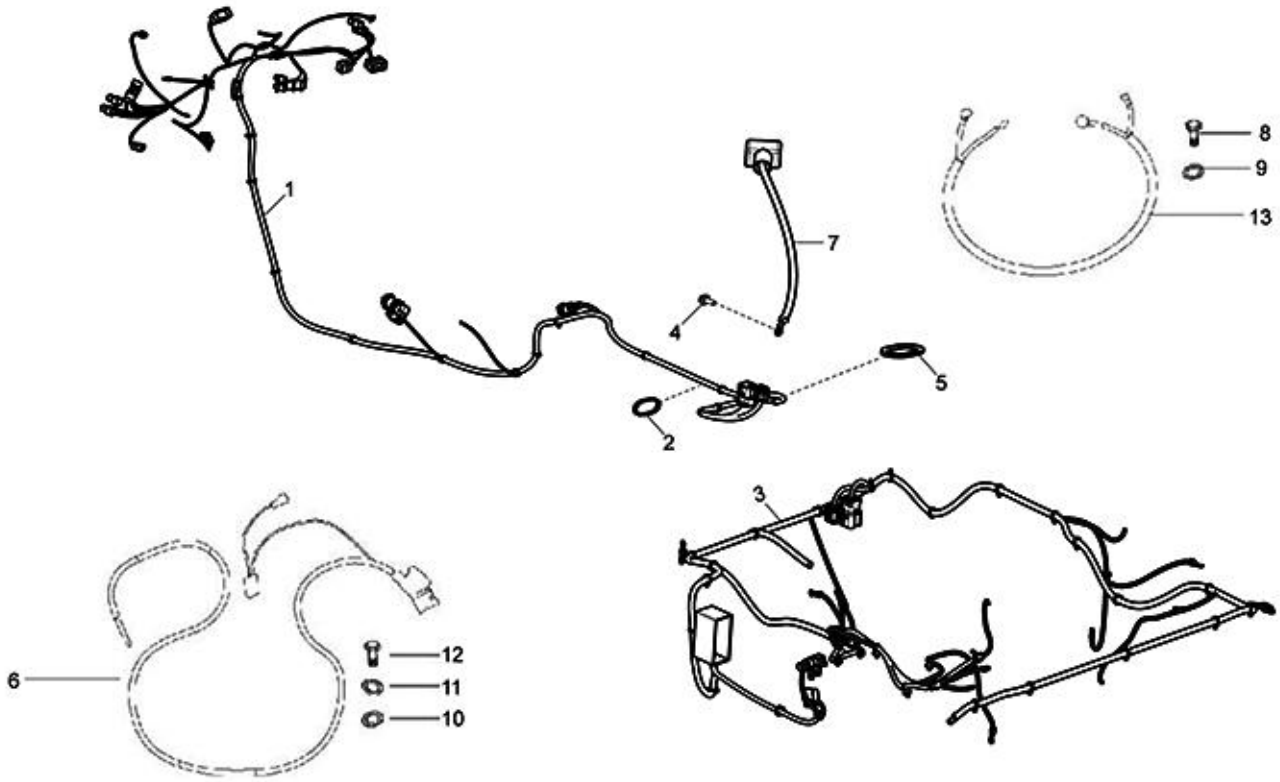
1
2
3
4
5
6
7
8
9
10
11
12
13

111

Print Date: 07-Apr-2022

PLATE-43

Wiring Harness

Fig. No.	Part No.	Description	Qty	Remarks
32	6D001161	STARTER SOLENOID, PIGTAIL	1	NI
33	6D000268	WIRING HARNESS, BATTERY +VE XTRA LD BSVI	1	NI

112

Print Date: 07-Apr-2022

PLATE-44

FRONT BRAKE ASSEMBLY SELF ADJUSTING (DIA 180 X 40 MM)

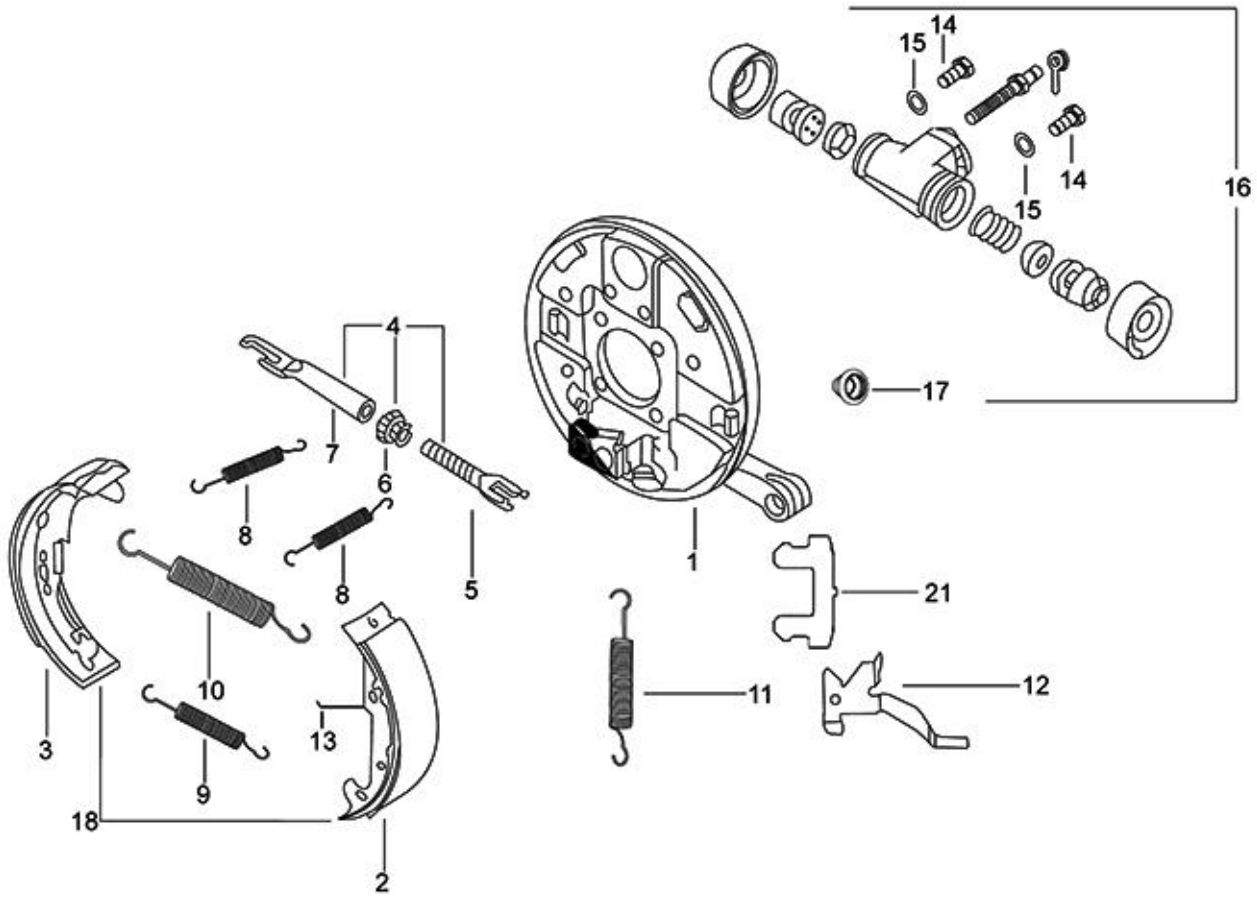
15
14
14
15
16
17
4
7
6
8
8
5
1
21
10
11
12
3
13
9
18
2

113

Print Date: 07-Apr-2022

PLATE-44

FRONT BRAKE ASSEMBLY SELF ADJUSTING (DIA 180 X 40 MM)

Fig. No.	Part No.	Description	Qty	Remarks
1	6C000275	BRACKET WHEEL CARRIER WITH PI	1	
2	B003784	LEADING SHOE COMP WITH PIN LH ANL 1643	1	
3	940004	FRONT BRAKE SHOE KIT COMPRISING OF 2 & 3	1	
4	179056	FORK ASSY LH	1	
5	178804	FORK FOR LH WHEEL	1	
6	178805	LH - GEAR	1	
7	178806	LH STRUT	1	
8	602497	JAWS STOP SPRINGS	2	
9	116088	SPRING SUPPORTING JAWS	1	
10	245038	SHOE RETURN SPRING	1	
11	178808	SPRING LEVER RETURN	1	
12	178807	LEVER LH	1	
13	178823	JUMPER LH	1	
13	178824	JUMPER	1	
14	63440	BOLT M6X12	2	
15	12536	SPRING WASHER	2	
16	587616	BRAKE CYLINDER FR ASSLY (DIA. 22.225)	1	
17	925501	CAP (KBX P 6450225)	1	
18	940004	FRONT BRAKE SHOE KIT COMPRISING OF 2 & 3	1	
19	925521	MINOR KIT WHEEL CYL. FRT (KBX 1007)	1	
20	6C000448	FRONT BRAKE ASSLY NON ASBESTOS BRAKE	1	NI -Under Development
21	6C000427	GROMMET FOR BRAKE INSPECTION HOLE	1	Under Development

114

Print Date: 07-Apr-2022

PLATE-45

REAR BRAKE ASSEMBLY SELF ADJUSTING (DIA 180 X 40 MM)

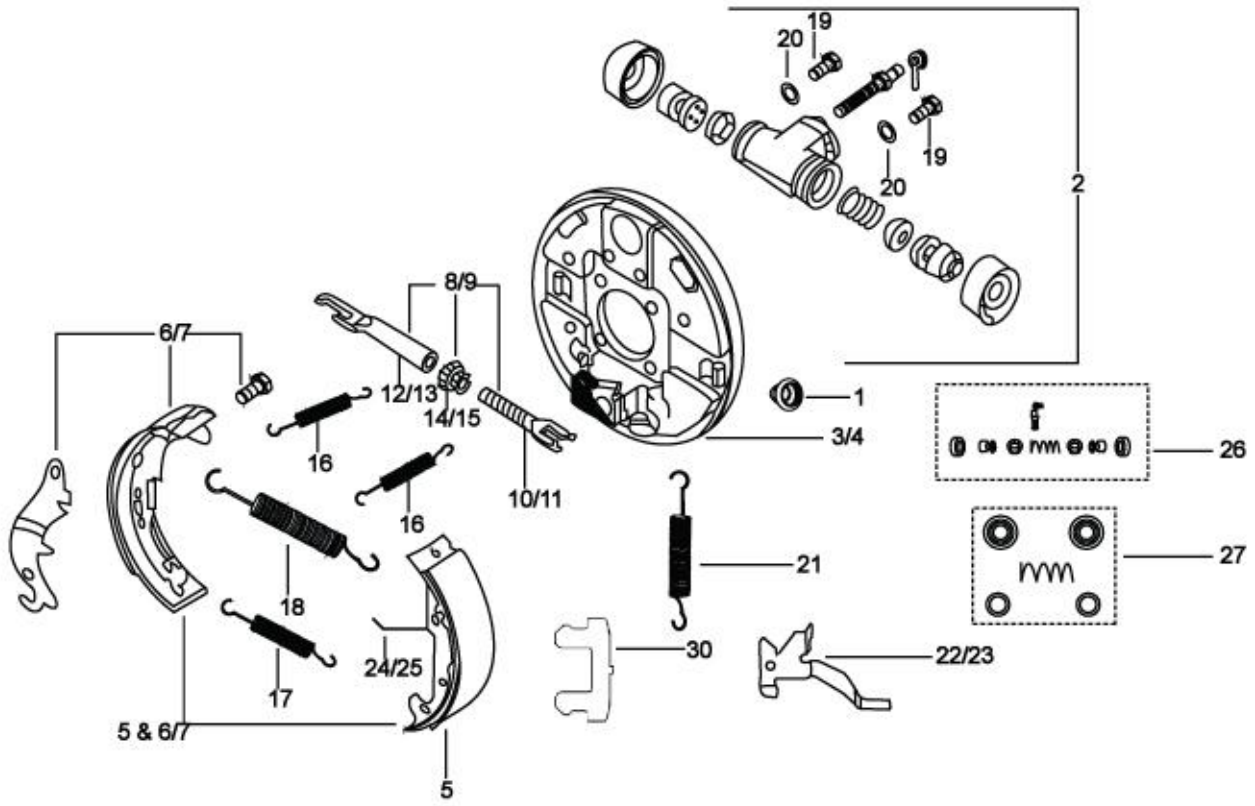
19
20
19
20
2
8/9
6/7
12/13
14/15
1
3/4
26
16
16
10/11
21
27
18
30
22/23
24/25
17
5 & 6/7
5

115

Print Date: 07-Apr-2022

PLATE-45

REAR BRAKE ASSEMBLY SELF ADJUSTING (DIA 180 X 40 MM)

Fig. No.	Part No.	Description	Qty	Remarks
1	925501	CAP (KBX P 6450225)	1	
2	632148	WHEEL CYLINDER ASSY. FRONT DIA. (25.4 MM)	1	
3	6C000277	JAWS-SUPPORTING DISK FOR LEFT WHEEL WITH	1	
4	6C000279	JAW-SUPPORT DISK FOR RIGHT WHEEL WITH AS	1	
5	B003784	LEADING SHOE COMP WITH PIN LH ANL 1643	1	
6	940005	REAR BRAKE SHOE SET L/H COMPRISING OF 5 & 7	1	
7	940006	REAR BRAKE SHOE SET R/H. COMPRISING OF 5 & 8	1	
8	179056	FORK ASSY LH	1	
9	179057	FORK ASSY. RH	1	
10	178804	FORK FOR LH WHEEL	1	
11	178818	RH FORK	1	
12	178806	LH STRUT	1	
13	178820	RH STRUT	1	
14	178805	LH - GEAR	1	
15	178819	RH GEAR	1	
16	602497	JAWS STOP SPRINGS	2	
17	116088	SPRING SUPPORTING JAWS	1	
18	245038	SHOE RETURN SPRING	1	
19	63440	BOLT M6X12	2	
20	12536	SPRING WASHER	2	
21	178808	SPRING LEVER RETURN	1	
22	178807	LEVER LH	1	
23	178821	LEVER RH	1	
24	178823	JUMPER LH	1	
25	178824	JUMPER	1	
26	925573	MAJOR KIT	1	
27	925574	MINOR KIT WHL CYL. RR	1	
28	940005	REAR BRAKE SHOE SET L/H COMPRISING OF 5 & 7	1	
29	940006	REAR BRAKE SHOE SET R/H. COMPRISING OF 5 & 8	1	
30	6C000427	GROMMET FOR BRAKE INSPECTION HOLE	1	Under Development

116

Print Date: 07-Apr-2022

PARTS INDEX

Ape_Xtra_LDX_And_LDXPlus_DSL_BSVI

117

Print Date: 07-Apr-2022

PART NO	BLOCK	PART NO	BLOCK	PART NO	BLOCK
006417	PLATE-25	109012	PLATE-34	125289	PLATE-37
006450	PLATE-27	109064	PLATE-38	12536	PLATE-44
006647	PLATE-25	109066	PLATE-37	12536	PLATE-45
009101	PLATE-26	109120	PLATE-33	12536	PLATE-36
013880	PLATE-20	109121	PLATE-33	12540	PLATE-33
016406	PLATE-41	109227	PLATE-38	12546	PLATE-41
016406	PLATE-42	109263	PLATE-33	12546	PLATE-33
016406	PLATE-42	109265	PLATE-37	126003011	PLATE-29
016406	PLATE-43	109404	PLATE-38	126052012	PLATE-29
016406	PLATE-20	109775	PLATE-38	126053016	PLATE-29
016406	PLATE-22	109892	PLATE-36	126054010	PLATE-29
016406	PLATE-31	111353	PLATE-24	126060019	PLATE-29
016406	PLATE-32	111353	PLATE-27	126902	PLATE-38
016406	PLATE-34	111498	PLATE-28	127012019	PLATE-22
016406	PLATE-38	113099	PLATE-28	127013013	PLATE-22
016408	PLATE-39	115531	PLATE-33	127016015	PLATE-27
016408	PLATE-41	116088	PLATE-44	127102010	PLATE-23
016408	PLATE-18	116088	PLATE-45	127111011	PLATE-27
016408	PLATE-28	116088	PLATE-36	127141016	PLATE-24
016408	PLATE-31	116103	PLATE-35	127141016	PLATE-27
016408	PLATE-32	116333	PLATE-33	127151011	PLATE-27
016408	PLATE-34	116334	PLATE-33	127185012	PLATE-22
016408	PLATE-36	116831	PLATE-36	127460010	PLATE-22
016408	PLATE-39	116971	PLATE-33	127471019	PLATE-22
016408	PLATE-39	116971	PLATE-39	12761	PLATE-39
01B020001	PLATE-5	118806	PLATE-40	12778	PLATE-32
01B020001	PLATE-5	119278	PLATE-39	128100019	PLATE-27
01B150096	PLATE-7	120164019	PLATE-22	128306015	PLATE-24
107718	PLATE-37	120170018	PLATE-22	128306015	PLATE-27
107732	PLATE-37	120203011	PLATE-23	128307019	PLATE-27
107827	PLATE-36	120238016	PLATE-40	128633	PLATE-36
107870	PLATE-36	120321019	PLATE-27	128804ED	PLATE-32
107870	PLATE-37	120322013	PLATE-27	128805ED	PLATE-32
107871	PLATE-37	12136	PLATE-33	132129	PLATE-27
108356	PLATE-33	12138	PLATE-38	132134	PLATE-27
108785	PLATE-39	124102019	PLATE-23	132136R	PLATE-27
108785	PLATE-40	124112014	PLATE-23	136426	PLATE-28
108800	PLATE-33	124113018	PLATE-23	136434	PLATE-37
108801	PLATE-33	124121015	PLATE-23	136451R	PLATE-36
108804	PLATE-33	124140011	PLATE-23	137026	PLATE-36
108805	PLATE-33	124141015R	PLATE-23	137235	PLATE-37
108873	PLATE-38	125012015	PLATE-23	13812	PLATE-39
108874	PLATE-38	125181	PLATE-38	13812	PLATE-33

118

Print Date: 07-Apr-2022

PART NO	BLOCK	PART NO	BLOCK	PART NO	BLOCK
138237	PLATE-39	16405	PLATE-41	193724	PLATE-33
13861	PLATE-28	16405	PLATE-20	196302	PLATE-36
13861	PLATE-31	16406	PLATE-35	1A000236	PLATE-24
13861	PLATE-33	16410	PLATE-20	1A000236	PLATE-27
13880	PLATE-35	16410	PLATE-36	1A000612	PLATE-27
13935	PLATE-33	16410	PLATE-36	1A000826	PLATE-24
13958	PLATE-34	16410	PLATE-37	1A001073	PLATE-29
140603	PLATE-33	16410	PLATE-37	1A004807	PLATE-27
140728	PLATE-39	165155R	PLATE-27	1A005176	PLATE-27
140728	PLATE-33	16603	PLATE-35	1A005178	PLATE-29
142424	PLATE-35	16620	PLATE-38	1A006634	PLATE-22
142425	PLATE-35	16626	PLATE-38	1A007179	PLATE-22
150041R	PLATE-41	178804	PLATE-44	1A009926	PLATE-27
150579	PLATE-37	178804	PLATE-45	1A010093	PLATE-24
150915R	PLATE-41	178805	PLATE-44	1A010093	PLATE-27
151924	PLATE-28	178805	PLATE-45	1A010138	PLATE-27
151924	PLATE-33	178806	PLATE-44	1A010187	PLATE-29
151924	PLATE-37	178806	PLATE-45	1A010966	PLATE-24
152025	PLATE-33	178807	PLATE-44	1A010966	PLATE-27
152580	PLATE-36	178807	PLATE-45	1A011778	PLATE-27
152580	PLATE-37	178808	PLATE-44	1A012011	PLATE-29
15335	PLATE-19	178808	PLATE-45	1A013303	PLATE-26
15335	PLATE-30	178818	PLATE-45	1A013304	PLATE-26
15335	PLATE-36	178819	PLATE-45	1A013305	PLATE-26
15594	PLATE-28	178820	PLATE-45	1A013330	PLATE-26
15594	PLATE-36	178821	PLATE-45	1A013333	PLATE-26
15640	PLATE-38	178823	PLATE-44	1A013334	PLATE-26
157103	PLATE-36	178823	PLATE-45	1A013336	PLATE-26
15727	PLATE-41	178824	PLATE-44	1A013344	PLATE-23
15727	PLATE-33	178824	PLATE-45	1A013345	PLATE-23
15911	PLATE-34	179056	PLATE-44	1A013347	PLATE-23
15996	PLATE-24	179056	PLATE-45	1A013352	PLATE-25
15996	PLATE-27	179057	PLATE-45	1A013368	PLATE-27
16319	PLATE-38	180431	PLATE-37	1A013370	PLATE-27
163659	PLATE-33	181746	PLATE-41	1A013372	PLATE-27
163660	PLATE-33	181747	PLATE-41	1A013373	PLATE-27
163661	PLATE-33	182660R	PLATE-33	1A013421	PLATE-29
163663	PLATE-33	182661R	PLATE-33	1A014032	PLATE-27
163665	PLATE-33	182662	PLATE-33	1A014034	PLATE-27
163666SP	PLATE-33	182663	PLATE-33	1A014338	PLATE-21
163667SP	PLATE-33	183077	PLATE-33	1A014753	PLATE-22
163782	PLATE-33	190255	PLATE-33	1A015742	PLATE-23
163784	PLATE-33	192020017	PLATE-33	1A016964	PLATE-24

119

Print Date: 07-Apr-2022

PART NO	BLOCK	PART NO	BLOCK	PART NO	BLOCK
1A016964	PLATE-25	20105	PLATE-23	267068	PLATE-36
1A017095	PLATE-29	20106	PLATE-40	267068	PLATE-36
1A017139	PLATE-29	20106	PLATE-40	286328	PLATE-20
1A017140	PLATE-29	20106	PLATE-41	286328	PLATE-30
1A017153	PLATE-21	20106	PLATE-42	286328	PLATE-36
1A017155	PLATE-21	20106	PLATE-42	286328	PLATE-36
1A017156	PLATE-21	20106	PLATE-42	288730	PLATE-27
1A017157	PLATE-21	20106	PLATE-19	30072	PLATE-31
1A017158	PLATE-21	20106	PLATE-22	30072	PLATE-32
1A017159	PLATE-21	20106	PLATE-35	30072	PLATE-34
1A017160	PLATE-21	20108	PLATE-39	30074	PLATE-33
1A017161	PLATE-21	20108	PLATE-18	30104	PLATE-38
1A017163	PLATE-21	20108	PLATE-19	30209R	PLATE-37
1A017165	PLATE-21	20108	PLATE-28	30242	PLATE-33
1A017329	PLATE-26	20108	PLATE-32	30242	PLATE-33
1A017330	PLATE-26	20108	PLATE-33	3054	PLATE-24
1A017345	PLATE-25	20108	PLATE-33	3054	PLATE-27
1A017348	PLATE-26	20108	PLATE-34	3054	PLATE-31
1A017356	PLATE-26	20108	PLATE-39	3055	PLATE-41
1A017361	PLATE-25	20110	PLATE-36	3055	PLATE-41
1A017362	PLATE-25	20110	PLATE-37	3055	PLATE-38
1A017364	PLATE-26	20110	PLATE-38	3056	PLATE-41
1A017366	PLATE-25	20359	PLATE-36	3056	PLATE-42
1A017438R	PLATE-25	220575	PLATE-27	3056	PLATE-42
1A017637	PLATE-21	226596	PLATE-36	3056	PLATE-43
1A017640	PLATE-21	226661	PLATE-36	3056	PLATE-19
1A017708	PLATE-23	226662	PLATE-36	3056	PLATE-22
1A017994	PLATE-26	229524	PLATE-39	3056	PLATE-34
1A018761	PLATE-26	231370	PLATE-30	3057	PLATE-32
1A018762	PLATE-26	231370	PLATE-36	3058	PLATE-39
1A018785	PLATE-27	231370	PLATE-36	3058	PLATE-41
1A019307	PLATE-22	231370	PLATE-36	3058	PLATE-43
1A019526	PLATE-27	231370	PLATE-36	3058	PLATE-18
1A019553	PLATE-27	237246	PLATE-36	3058	PLATE-19
1A019553	PLATE-29	2383	PLATE-30	3058	PLATE-30
1A019644	PLATE-22	243303R	PLATE-36	3058	PLATE-32
1E002723	PLATE-38	2438	PLATE-30	3058	PLATE-34
1F000626	PLATE-23	2438	PLATE-30	3068	PLATE-28
1F000631	PLATE-23	245038	PLATE-44	3068	PLATE-36
1F000830	PLATE-22	245038	PLATE-45	31056	PLATE-20
20105	PLATE-39	261323	PLATE-18	31057	PLATE-41
20105	PLATE-40	261323	PLATE-34	31058	PLATE-33
20105	PLATE-41	267065	PLATE-36	31088	PLATE-43

120

Print Date: 07-Apr-2022

PART NO	BLOCK	PART NO	BLOCK	PART NO	BLOCK
31088	PLATE-19	567993	PLATE-37	604506	PLATE-42
31088	PLATE-19	568093	PLATE-31	604558	PLATE-33
31088	PLATE-20	568095	PLATE-37	604560	PLATE-33
31088	PLATE-31	568096	PLATE-41	604603	PLATE-35
31088	PLATE-34	568161	PLATE-39	604689	PLATE-33
31088	PLATE-35	568689	PLATE-30	604690	PLATE-33
31089	PLATE-32	568692	PLATE-33	604691	PLATE-31
31089	PLATE-35	569150	PLATE-37	604692	PLATE-31
31089	PLATE-38	569156	PLATE-33	604707	PLATE-33
31092	PLATE-22	569157	PLATE-33	604717	PLATE-39
31116	PLATE-41	569165	PLATE-42	604717	PLATE-40
31116	PLATE-43	569166	PLATE-42	604756	PLATE-18
31118	PLATE-39	569177	PLATE-42	604758	PLATE-38
31119	PLATE-36	569178	PLATE-42	604759	PLATE-38
31122	PLATE-39	569193	PLATE-33	604781	PLATE-40
31159	PLATE-36	569241	PLATE-30	604782	PLATE-40
485703	PLATE-23	569241	PLATE-30	604785	PLATE-32
566545	PLATE-37	569244	PLATE-30	604812	PLATE-33
567454	PLATE-33	569244	PLATE-30	604890	PLATE-31
567455	PLATE-33	569375	PLATE-30	604909	PLATE-20
567456	PLATE-33	569377	PLATE-30	604948	PLATE-30
567457	PLATE-33	5745	PLATE-33	605003	PLATE-36
567458	PLATE-33	587616	PLATE-44	605389	PLATE-33
567459	PLATE-33	587617	PLATE-36	60565	PLATE-38
567461	PLATE-39	587650R	PLATE-31	6066	PLATE-36
567473	PLATE-37	587685	PLATE-28	6066	PLATE-37
567484	PLATE-43	587687	PLATE-28	6078	PLATE-41
567498R	PLATE-24	587702	PLATE-39	6078	PLATE-31
567498R	PLATE-27	587803	PLATE-40	6078	PLATE-33
567593	PLATE-41	587904	PLATE-38	616896	PLATE-31
567690	PLATE-39	587905PC	PLATE-34	616897	PLATE-31
567690	PLATE-40	587928	PLATE-39	616931	PLATE-37
567700	PLATE-41	587963	PLATE-34	6173	PLATE-39
567746G1	PLATE-39	587971	PLATE-28	6173	PLATE-40
567878R	PLATE-20	587971	PLATE-33	6173	PLATE-42
567893	PLATE-31	587971	PLATE-37	6173	PLATE-39
567898	PLATE-39	5969	PLATE-40	6177	PLATE-33
567899	PLATE-39	5969	PLATE-39	62961	PLATE-33
567920	PLATE-39	6018	PLATE-33	632109	PLATE-18
567920	PLATE-31	602497	PLATE-44	632148	PLATE-45
567990	PLATE-38	602497	PLATE-45	632148	PLATE-36
567991	PLATE-38	602497	PLATE-36	632158	PLATE-38
567992	PLATE-38	604502	PLATE-39	632238	PLATE-33

121

Print Date: 07-Apr-2022

PART NO	BLOCK	PART NO	BLOCK	PART NO	BLOCK
632292	PLATE-42	660348	PLATE-40	6A000686	PLATE-20
632719	PLATE-37	660931	PLATE-28	6A000693	PLATE-30
632995	PLATE-42	661231	PLATE-37	6A000696	PLATE-30
63440	PLATE-44	661262	PLATE-32	6A000701	PLATE-30
63440	PLATE-45	661266	PLATE-36	6A000827	PLATE-19
63440	PLATE-36	661267	PLATE-36	6A000864	PLATE-19
640762	PLATE-38	661282	PLATE-36	6A000883	PLATE-40
6411	PLATE-39	661925	PLATE-41	6A000884	PLATE-40
6414	PLATE-39	661925	PLATE-31	6A000937	PLATE-39
642032	PLATE-38	662323	PLATE-32	6A000937	PLATE-40
64263	PLATE-33	662465	PLATE-19	6A001045	PLATE-20
643500	PLATE-41	662571	PLATE-18	6A001047R	PLATE-40
643576	PLATE-28	662571	PLATE-20	6A001087	PLATE-18
643576	PLATE-36	6650	PLATE-36	6A001143	PLATE-19
643613	PLATE-32	6733	PLATE-37	6A001168	PLATE-30
643691	PLATE-31	6965	PLATE-33	6A001169	PLATE-30
643705R	PLATE-41	6A000036	PLATE-18	6A001170	PLATE-30
643741	PLATE-36	6A000037	PLATE-18	6A001180	PLATE-19
643772R	PLATE-37	6A000056	PLATE-1	6A001182	PLATE-19
644299	PLATE-20	6A000071	PLATE-18	6A001359	PLATE-19
644812	PLATE-36	6A000238	PLATE-19	6A001360	PLATE-19
644812	PLATE-39	6A000253	PLATE-18	6A001484	PLATE-19
644813	PLATE-36	6A000278	PLATE-20	6A001583	PLATE-19
644813	PLATE-39	6A000279	PLATE-19	6A001584	PLATE-19
644838R	PLATE-43	6A000280	PLATE-19	6A001633	PLATE-30
644973R	PLATE-28	6A000281	PLATE-19	6A001637	PLATE-38
644973R	PLATE-33	6A000282	PLATE-19	6A001726	PLATE-20
644973R	PLATE-37	6A000301	PLATE-20	6B000089ED	PLATE-32
645141	PLATE-34	6A000343	PLATE-19	6B000207	PLATE-35
652027R	PLATE-28	6A000349	PLATE-19	6B000208	PLATE-35
652124	PLATE-22	6A000353	PLATE-19	6B000250	PLATE-33
652520	PLATE-36	6A000357	PLATE-19	6B000251	PLATE-33
652520	PLATE-37	6A000373	PLATE-30	6B000387ED	PLATE-34
652521	PLATE-37	6A000375	PLATE-38	6B000552	PLATE-19
652563	PLATE-19	6A000527	PLATE-20	6B000573	PLATE-19
652563	PLATE-19	6A000528	PLATE-20	6B000579	PLATE-31
660168	PLATE-41	6A000557	PLATE-19	6B000630BW	PLATE-32
660168	PLATE-31	6A000557	PLATE-5	6B000630CB	PLATE-32
660168	PLATE-34	6A000582	PLATE-39	6B000630CO	PLATE-32
660175	PLATE-32	6A000582	PLATE-40	6B000630EG	PLATE-32
660207ED	PLATE-32	6A000608	PLATE-20	6B000630GY	PLATE-32
660341	PLATE-39	6A000618	PLATE-20	6B000630PA	PLATE-32
660345	PLATE-40	6A000685	PLATE-20	6B000630PB	PLATE-32

122

Print Date: 07-Apr-2022

PART NO	BLOCK	PART NO	BLOCK	PART NO	BLOCK
6B000630WR	PLATE-32	6B002707EG	PLATE-32	6C000448	PLATE-44
6B000728	PLATE-34	6B002707GY	PLATE-32	6C000468	PLATE-39
6B000740	PLATE-34	6B002707PA	PLATE-32	6C000468	PLATE-39
6B001067	PLATE-32	6B002707PB	PLATE-32	6C000469	PLATE-39
6B001073	PLATE-32	6B002707WR	PLATE-32	6C000469	PLATE-39
6B001118	PLATE-34	6B002749BW	PLATE-32	6C000473SP	PLATE-37
6B001129	PLATE-34	6B002749CB	PLATE-32	6C000475SP	PLATE-37
6B001140	PLATE-34	6B002749CO	PLATE-32	6C000662	PLATE-36
6B001140	PLATE-34	6B002749ED	PLATE-32	6D000143R	PLATE-41
6B001204R	PLATE-34	6B002749EG	PLATE-32	6D000144R	PLATE-41
6B001207R	PLATE-34	6B002749GY	PLATE-32	6D000145R	PLATE-41
6B001458	PLATE-34	6B002749PA	PLATE-32	6D000146R	PLATE-41
6B001462	PLATE-34	6B002749PB	PLATE-32	6D000227	PLATE-43
6B001486	PLATE-34	6B002749WR	PLATE-32	6D000232	PLATE-31
6B001495R	PLATE-32	6B002773BW	PLATE-32	6D000240	PLATE-31
6B001496R	PLATE-32	6B002773CB	PLATE-32	6D000251	PLATE-43
6B001586	PLATE-34	6B002773CO	PLATE-32	6D000253	PLATE-31
6B001643BW	PLATE-32	6B002773EG	PLATE-32	6D000257	PLATE-43
6B001643CB	PLATE-32	6B002773GY	PLATE-32	6D000258	PLATE-43
6B001643CO	PLATE-32	6B002773PA	PLATE-32	6D000265	PLATE-41
6B001643EG	PLATE-32	6B002773PB	PLATE-32	6D000268	PLATE-43
6B001643GY	PLATE-32	6B002773WR	PLATE-32	6D000305	PLATE-41
6B001643PA	PLATE-32	6C000016	PLATE-28	6D000311	PLATE-23
6B001643PB	PLATE-32	6C000041	PLATE-28	6D000478	PLATE-43
6B001643WR	PLATE-32	6C000060	PLATE-36	6D000479	PLATE-43
6B001921	PLATE-34	6C000124	PLATE-39	6D000480	PLATE-43
6B001946	PLATE-34	6C000190	PLATE-38	6D000481	PLATE-43
6B001947	PLATE-34	6C000191	PLATE-38	6D000482	PLATE-43
6B001978	PLATE-35	6C000265	PLATE-38	6D000483	PLATE-43
6B002008	PLATE-34	6C000273	PLATE-38	6D000484	PLATE-43
6B002075	PLATE-32	6C000275	PLATE-44	6D000499	PLATE-43
6B002165	PLATE-35	6C000275	PLATE-37	6D000500	PLATE-43
6B002701BW	PLATE-32	6C000277	PLATE-45	6D000508	PLATE-43
6B002701CB	PLATE-32	6C000277	PLATE-36	6D000667	PLATE-43
6B002701CO	PLATE-32	6C000279	PLATE-45	6D000671R	PLATE-38
6B002701EG	PLATE-32	6C000279	PLATE-36	6D000872	PLATE-43
6B002701GY	PLATE-32	6C000312R	PLATE-28	6D000873	PLATE-43
6B002701PA	PLATE-32	6C000372	PLATE-36	6D000874	PLATE-43
6B002701PB	PLATE-32	6C000373	PLATE-36	6D000877	PLATE-43
6B002701WR	PLATE-32	6C000383	PLATE-36	6D000930	PLATE-43
6B002707BW	PLATE-32	6C000427	PLATE-44	6D000931	PLATE-43
6B002707CB	PLATE-32	6C000427	PLATE-45	6D000932	PLATE-43
6B002707CO	PLATE-32	6C000443	PLATE-39	6D000948	PLATE-31

123

Print Date: 07-Apr-2022

PART NO	BLOCK	PART NO	BLOCK	PART NO	BLOCK
6D000952	PLATE-31	920084	PLATE-41	A01A090005	PLATE-8
6D001052	PLATE-43	925501	PLATE-44	A01A090006	PLATE-2
6D001063	PLATE-43	925501	PLATE-45	A01A090007	PLATE-8
6D001066	PLATE-43	925521	PLATE-44	A01A090009	PLATE-8
6D001161	PLATE-43	925571	PLATE-42	A01A090011	PLATE-9
7066R	PLATE-24	925573	PLATE-45	A01A090017	PLATE-8
7066R	PLATE-27	925574	PLATE-45	A01A100001	PLATE-15
72515	PLATE-31	925581	PLATE-41	A01A110001	PLATE-9
74414	PLATE-36	925581	PLATE-41	A01A120004	PLATE-13
74414	PLATE-37	925603	PLATE-41	A01A120005	PLATE-13
74521	PLATE-37	925888	PLATE-20	A01A140002	PLATE-17
75708	PLATE-37	940004	PLATE-44	A01A140002	PLATE-18
78307	PLATE-35	940004	PLATE-44	A01A210011	PLATE-17
808000826	PLATE-31	940005	PLATE-45	A01A210011	PLATE-18
808000826	PLATE-32	940005	PLATE-45	A01B010001	PLATE-5
8080	PLATE-41	940006	PLATE-45	A01B010002	PLATE-8
8080	PLATE-31	940006	PLATE-45	A01B010003	PLATE-8
811051525	PLATE-23	940038	PLATE-19	A01B010009	PLATE-2
811081025	PLATE-23	940118	PLATE-31	A01B020001	PLATE-2
822031942	PLATE-23	940211	PLATE-19	A01B040001	PLATE-10
822031942	PLATE-23	940212	PLATE-19	A01B060004	PLATE-6
822051647	PLATE-27	97756	PLATE-33	A01B110001	PLATE-9
825123207	PLATE-22	97756	PLATE-33	A01B120002	PLATE-5
841005207	PLATE-23	A01A010002	PLATE-3	A01B140001	PLATE-16
841005506	PLATE-24	A01A010003	PLATE-8	A01B140002	PLATE-9
841005506	PLATE-27	A01A010018	PLATE-3	A01B140004	PLATE-7
842001600	PLATE-22	A01A010020	PLATE-2	A01B140004	PLATE-7
842002501	PLATE-27	A01A010030	PLATE-2	A01B140004	PLATE-17
842003000	PLATE-24	A01A020001	PLATE-5	A01B140005	PLATE-8
842003000	PLATE-27	A01A020001	PLATE-5	A01B210001	PLATE-17
842004808	PLATE-26	A01A020006	PLATE-5	A01G030002	PLATE-8
843000500	PLATE-27	A01A030001	PLATE-11	A01G030002	PLATE-2
843000809	PLATE-39	A01A040001	PLATE-10	A01G050001	PLATE-8
843000809	PLATE-22	A01A040003	PLATE-10	A01G050002	PLATE-8
8451	PLATE-33	A01A050003	PLATE-3	A01G060008	PLATE-6
87067	PLATE-37	A01A050004	PLATE-3	A01G070006	PLATE-7
8771	PLATE-37	A01A060005	PLATE-14	A01G070009	PLATE-7
880305509R	PLATE-24	A01A060008	PLATE-6	A01G100001	PLATE-5
8808	PLATE-33	A01A060009	PLATE-6	A01G120001	PLATE-12
884222808	PLATE-23	A01A060010	PLATE-6	A01G120003	PLATE-5
8847	PLATE-33	A01A070001	PLATE-7	A01G120005	PLATE-12
89281	PLATE-33	A01A080001	PLATE-4	A01G120006	PLATE-12
920083	PLATE-41	A01A090004	PLATE-12	A01G120007	PLATE-20

124

Print Date: 07-Apr-2022

PART NO	BLOCK	PART NO	BLOCK	PART NO	BLOCK
A01G120009	PLATE-17	A01S020001	PLATE-5	B019220	PLATE-22
A01G120009	PLATE-20	A01S070001	PLATE-5	B024170	PLATE-20
A01G120010	PLATE-17	A01S070002	PLATE-7	B024373	PLATE-28
A01G120010	PLATE-20	A01S070004	PLATE-7	B024373	PLATE-36
A01G120013	PLATE-5	A01S070005	PLATE-7	B024537R	PLATE-41
A01G120014	PLATE-17	A01S070007	PLATE-7	B024614	PLATE-28
A01G120014	PLATE-18	A01S070011	PLATE-7	B024733	PLATE-33
A01G120014	PLATE-20	A01S090001	PLATE-8	B024734	PLATE-33
A01G120020	PLATE-17	A01S100001	PLATE-15	B024741	PLATE-41
A01G120021	PLATE-17	A01S110001	PLATE-9	B041653	PLATE-38
A01G140002	PLATE-16	A01S120001	PLATE-17	B042317	PLATE-39
A01G140003	PLATE-8	A01S120002	PLATE-17	B042317	PLATE-40
A01G140009	PLATE-16	A01S140001	PLATE-17	B042486	PLATE-23
A01G140010	PLATE-5	A01S140001	PLATE-18	B042486	PLATE-24
A01G140011	PLATE-9	A01T070001	PLATE-7	B042486	PLATE-27
A01G140013	PLATE-17	A01T070002	PLATE-7	B042505ED	PLATE-32
A01G140013	PLATE-18	A01T090005	PLATE-9	B042529ED	PLATE-32
A01G140021	PLATE-9	A01T090006	PLATE-9	B042612	PLATE-35
A01G140035	PLATE-17	A01T100004	PLATE-7	B042619	PLATE-35
A01G140035	PLATE-18	A01T100008	PLATE-7	B042656	PLATE-19
A01G140036	PLATE-17	A01T120001	PLATE-13	B042700 BS6	PLATE-33
A01G140036	PLATE-18	A01T120004	PLATE-13	B042794	PLATE-39
A01G140037	PLATE-17	A03A030012	PLATE-10	B042798	PLATE-24
A01G140037	PLATE-18	A03G120006	PLATE-8	B042798	PLATE-27
A01G140047	PLATE-9	B000744	PLATE-41	B042799	PLATE-25
A01G190004	PLATE-8	B001561	PLATE-37	B042814	PLATE-33
A01G190006	PLATE-41	B001844	PLATE-25	B073320R	PLATE-43
A01G190006	PLATE-17	B001954R	PLATE-33	B073366R	PLATE-38
A01G200001	PLATE-18	B002486	PLATE-18	B073478R	PLATE-31
A01G200002	PLATE-18	B002847	PLATE-33	B073479R	PLATE-31
A01M010008	PLATE-15	B002848	PLATE-33	B073481R	PLATE-31
A01M010009	PLATE-2	B003784	PLATE-44	B073715	PLATE-41
A01M030007	PLATE-11	B003784	PLATE-45	B073810	PLATE-31
A01M040002	PLATE-10	B003864	PLATE-33	B073811	PLATE-31
A01M070002	PLATE-5	B003865	PLATE-33	B073812	PLATE-31
A01M100003	PLATE-7	B003924	PLATE-26	B073813	PLATE-31
A01M100004	PLATE-7	B006806	PLATE-31	B073814	PLATE-31
A01M110002	PLATE-2	B016611	PLATE-29	B073817	PLATE-38
A01M110003	PLATE-9	B016956	PLATE-22	B073848	PLATE-38
A01M120002	PLATE-12	B018464	PLATE-26	B074033	PLATE-41
A01M140002	PLATE-16	B018678	PLATE-22	B074173	PLATE-33
A01R210001	PLATE-17	B018991	PLATE-23	B074262	PLATE-31
A01S010002	PLATE-3	B018991	PLATE-27	B074322	PLATE-41

125

Print Date: 07-Apr-2022

PART NO	BLOCK	PART NO	BLOCK	PART NO	BLOCK
B074323	PLATE-41	B078870	PLATE-35	E40020418	PLATE-5
B074327	PLATE-41	B078876	PLATE-35	E422973009	PLATE-2
B074491	PLATE-41	B079248	PLATE-38	E43500578	PLATE-8
B074539	PLATE-41	CM305001	PLATE-1	E43502817	PLATE-9
B074905	PLATE-31	CM305001	PLATE-23	E43502817	PLATE-9
B075002	PLATE-24	CM305004	PLATE-1	E47177007	PLATE-10
B075178R	PLATE-43	D9166140616	PLATE-20	E50000225	PLATE-17
B075855	PLATE-41	E04M090004	PLATE-8	E50000225	PLATE-5
B075974	PLATE-35	E07500508	PLATE-7	E50000421	PLATE-8
B075999	PLATE-41	E07500508	PLATE-5	E50000613	PLATE-7
B076000	PLATE-41	E07500508	PLATE-5	E50002805	PLATE-8
B076001	PLATE-35	E07500520	PLATE-2	E50002806	PLATE-7
B076007	PLATE-19	E07500520	PLATE-16	E50002806	PLATE-16
B076007	PLATE-20	E07500528	PLATE-5	E50006328	PLATE-8
B076098ED	PLATE-34	E07502801	PLATE-7	E500405518	PLATE-33
B076120	PLATE-35	E07502801	PLATE-7	E52200434	PLATE-10
B076165	PLATE-31	E07502801	PLATE-7	E60000227	PLATE-5
B076191	PLATE-41	E07502802	PLATE-8	E60009715	PLATE-8
B076205	PLATE-32	E07502802	PLATE-7	E60022258	PLATE-8
B076303	PLATE-42	E07502804	PLATE-15	E60022258	PLATE-2
B076304	PLATE-42	E07502809	PLATE-9	E87101059	PLATE-13
B076306	PLATE-40	E07502809	PLATE-11	E90303028	PLATE-8
B076307	PLATE-40	E07502810	PLATE-7	E91200082	PLATE-2
B076455	PLATE-39	E07502810	PLATE-16	E9121356	PLATE-8
B076455	PLATE-40	E07502810	PLATE-16	E9190056	PLATE-12
B076605	PLATE-41	E07502810	PLATE-7	E97626043	PLATE-10
B076606	PLATE-41	E07502811	PLATE-9	ED40208	PLATE-10
B076801	PLATE-35	E07502811	PLATE-12	ED40642	PLATE-12
B076802	PLATE-35	E07502811	PLATE-2	ESP650DBP005	PLATE-2
B076859	PLATE-37	E07502811	PLATE-5	ESP650DBP005	PLATE-3
B076880	PLATE-39	E07502811	PLATE-5	ESP650DBP006	PLATE-3
B077155	PLATE-39	E07506189	PLATE-8	ESP650DBP007	PLATE-3
B077156	PLATE-39	E07509640	PLATE-11	ESP650DCH004	PLATE-6
B077219	PLATE-41	E07520112	PLATE-8	ESP650DCH007	PLATE-5
B077219	PLATE-43	E1756507	PLATE-17	ESP650DCH011	PLATE-9
B077339	PLATE-31	E1756507	PLATE-5	ESP650DCH016	PLATE-6
B077883	PLATE-31	E200467003	PLATE-12	ESP650DCH017	PLATE-6
B077884	PLATE-31	E250467014	PLATE-8	ESP650DCH018	PLATE-6
B077885	PLATE-31	E260467001	PLATE-12	ESP650DCH019	PLATE-5
B078044	PLATE-34	E260467001	PLATE-2	ESP650DCH020	PLATE-6
B078272	PLATE-41	E260973027	PLATE-7	ESP650DCH021	PLATE-6
B078274	PLATE-41	E291228056	PLATE-10	ESP650DCH024	PLATE-6
B078286R	PLATE-41	E31M060003	PLATE-6	ESP650DCH025	PLATE-6

126