Parts Catalog

Commercial Vehicle

Ape Xtra Passenger DSL_BSII_BSIII

PIAGGIO VEHICLES PRIVATE LIMITED
Registered Office: Bund Garden Road ,Opp. Residency Club , Pune (India)

Print Date: 27-Mar-2022

PLATES INDEX

Sr No.	Plate Name	Plate No.	Page No.
1	CYLENDER, CRANKCASE, OIL PAN, PTO COVER AND CRANKSHAFT SUPPORT	1	1-4
2	CYLINDER HEAD ASSEMBLY & DECOMPRESSION LEVER	2	5-8
3	ROCKER ARM COVER	3	9-10
4	CRANKSHAFT, PISTON AND CON ROD ASSY	4	11-12
5	CAM SHAFT, PUSH ROD AND ROCKER ARMS	5	13-14
6	GOVERNOR, FUEL PUMP CONTROL LEVER, L.O. PUMP ASSY. AND SPIN-ON TYPE LUB OIL FILTER	6	15-18
7	REMOTE THROTTLE AND STOP CONTROL	7	19-20
8	FEED PUMP, FUEL FILTER AND FUEL PIPE LINES	8	21-24
9	FUEL INJECTION PUMP AND INJECTOR ASSY	9	25-28
10	ENGINE COWLING, AIR DUCT, EXHAUST SYSTEM	10	29-32
11	AIR SHROUD / FLYWHEEL / PULLEY / ELECTRIC START SYSTEM COMPONENTS	11	33-36
12	AIR FILTER ASSEMBLY	12	37-38
13	ENGINE SIDE COVER AND MAIN HOUSING	13	39-40
14	MAINSHAFT, SPEED GEARS AND CLUSTER GEAR	14	41-42
15	GEAR SHIFTER AND ITS CONTROL MECHANISM	15	43-44
16	DIFFERENTIAL UNIT, FARE METER HOUSING AND SPEEDO DRIVE	16	45-50
17	CLUTCH AND CLUTCH COVER	17	51-54
18	ENGINE SUPPORT	18	55-58
19	CHASSIS FRAME, FUEL TANK & SEAT	19	59-62
20	INNER PARTS OF CABIN	20	63-64
21	CHASSIS COMPONENTS	21	65-66
22	RUBBER MAT, REAR MUDGUARD	22	67-70
23	DOORS, TOOLS AND WHEELS	23	71-72
24	REAR SUSPENSION	24	73-76
25	STEERING COLUMN AND FRONT SUSPENSION	25	77-80
26	HANDLE BAR AND CONTROL	26	81-84
27	BRAKE - TANDEM MASTER CYLINDER, BRAKE PIPE AND HAND BRAKES	27	85-88
28	ELECTRICAL DEVICES	28	89-92
29	ELECTRICAL DEVICES	29	93-98
30	PASSENGER AUTO RICKSHAW BODY	30	99-104

Print Date: 27-Mar-2022

PLATES INDEX

Sr No.	Plate Name	Plate No.	Page No.
31	CABLE HARNESS	31	105-106
32	FRONT BRAKE ASSEMBLY SELF ADJUSTING (DIA 180 X 40 MM)	32	107-108
33	REAR BRAKE ASSEMBLY SELF ADJUSTING (DIA 180 X 40 MM)	33	109-110

Print Date: 27-Mar-2022

PICTORIAL PLATES INDEX

PLATE-1 **CYLENDER, CRANKCASE, OIL PAN, PTO COVER AND CRANKSHAFT SUPPORT**

Page No. :1-4

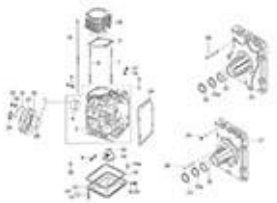

PLATE-2 **CYLINDER HEAD ASSEMBLY & DECOMPRESSION LEVER**

Page No. :5-8

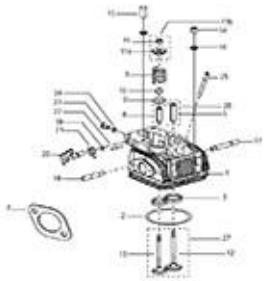

PLATE-3 **ROCKER ARM COVER**

Page No. :9-10

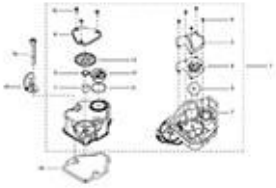

PLATE-4 **CRANKSHAFT, PISTON AND CON ROD ASSY**

Page No. :11-12

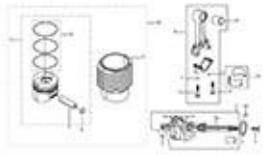

PLATE-5 **CAM SHAFT, PUSH ROD AND ROCKER ARMS**

Page No. :13-14

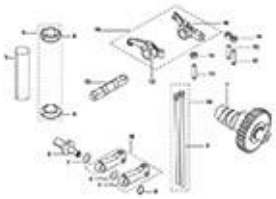

PLATE-6 **GOVERNOR, FUEL PUMP CONTROL LEVER, L.O. PUMP ASSY. AND SPIN-ON TYPE LUB OIL FILTER**

Page No. :15-18

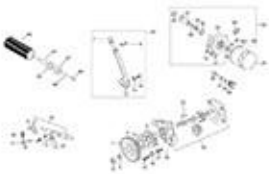

PLATE-7 **REMOTE THROTTLE AND STOP CONTROL**

Page No. :19-20

PLATE-8 **FEED PUMP, FUEL FILTER AND FUEL PIPE LINES**

Page No. :21-24

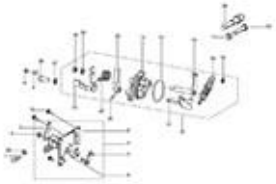

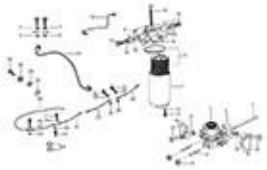

Print Date: 27-Mar-2022

PICTORIAL PLATES INDEX

PLATE-9 **FUEL INJECTION PUMP AND INJECTOR ASSY**
Page No. :25-28

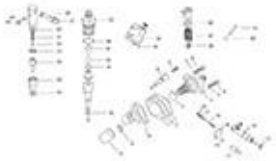

PLATE-10 **ENGINE COWLING, AIR DUCT, EXHAUST SYSTEM**
Page No. :29-32

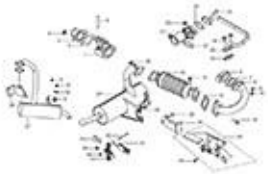

PLATE-11 **AIR SHROUD / FLYWHEEL / PULLEY / ELECTRIC START SYSTEM COMPONENTS**
Page No. :33-36

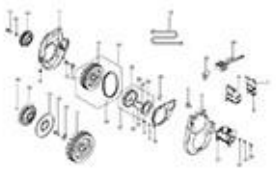

PLATE-12 **AIR FILTER ASSEMBLY**
Page No. :37-38

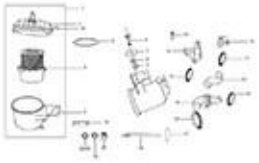

PLATE-13 **ENGINE SIDE COVER AND MAIN HOUSING**
Page No. :39-40

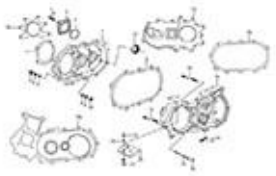

PLATE-14 **MAINSHAFT, SPEED GEARS AND CLUSTER GEAR**
Page No. :41-42

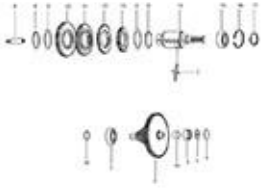

PLATE-15 **GEAR SHIFTER AND ITS CONTROL MECHANISM**
Page No. :43-44

PLATE-16 **DIFFERENTIAL UNIT, FARE METER HOUSING AND SPEEDO DRIVE**
Page No. :45-50

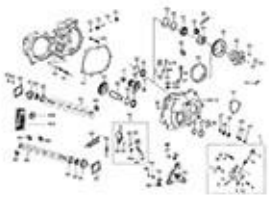

Print Date: 27-Mar-2022

PICTORIAL PLATES INDEX

PLATE-17 CLUTCH AND CLUTCH COVER

Page No. :51-54

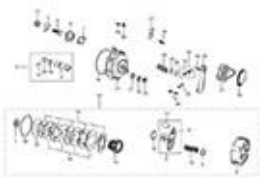

PLATE-18 ENGINE SUPPORT

Page No. :55-58

PLATE-19 CHASSIS FRAME, FUEL TANK & SEAT

Page No. :59-62

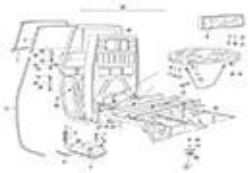

PLATE-20 INNER PARTS OF CABIN

Page No. :63-64

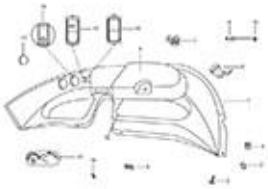

PLATE-21 CHASSIS COMPONENTS

Page No. :65-66

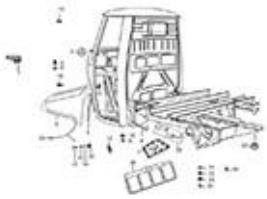

PLATE-22 RUBBER MAT, REAR MUDGUARD

Page No. :67-70

PLATE-23 DOORS, TOOLS AND WHEELS

Page No. :71-72

PLATE-24 REAR SUSPENSION

Page No. :73-76

Print Date: 27-Mar-2022

PICTORIAL PLATES INDEX

PLATE-25 **STEERING COLUMN AND FRONT SUSPENSION**
Page No. :77-80

PLATE-26 **HANDLE BAR AND CONTROL**
Page No. :81-84

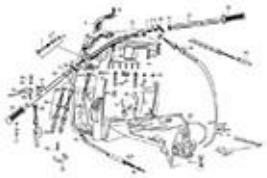

PLATE-27 **BRAKE - TANDEM MASTER CYLINDER, BRAKE PIPE AND HAND BRAKES**
Page No. :85-88

PLATE-28 **ELECTRICAL DEVICES**
Page No. :89-92

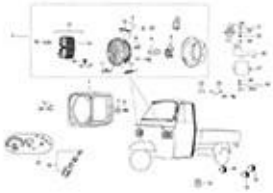

PLATE-29 **ELECTRICAL DEVICES**
Page No. :93-98

PLATE-30 **PASSENGER AUTO RICKSHAW BODY**
Page No. :99-104

PLATE-31 **CABLE HARNESS**
Page No. :105-106

PLATE-32 **FRONT BRAKE ASSEMBLY SELF ADJUSTING (DIA 180 X 40 MM)**
Page No. :107-108

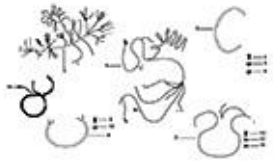

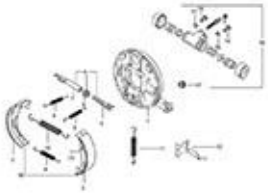

Print Date: 27-Mar-2022

PICTORIAL PLATES INDEX

PLATE-33 **REAR BRAKE ASSEMBLY SELF ADJUSTING (DIA 180 X 40 MM)**

Page No. :109-110

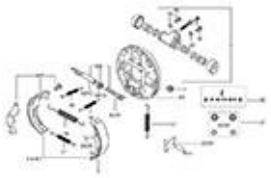

Print Date: 27-Mar-2022

PLATE-1

CYLENDER, CRANKCASE, OIL PAN, PTO COVER AND CRANKSHAFT SUPPORT

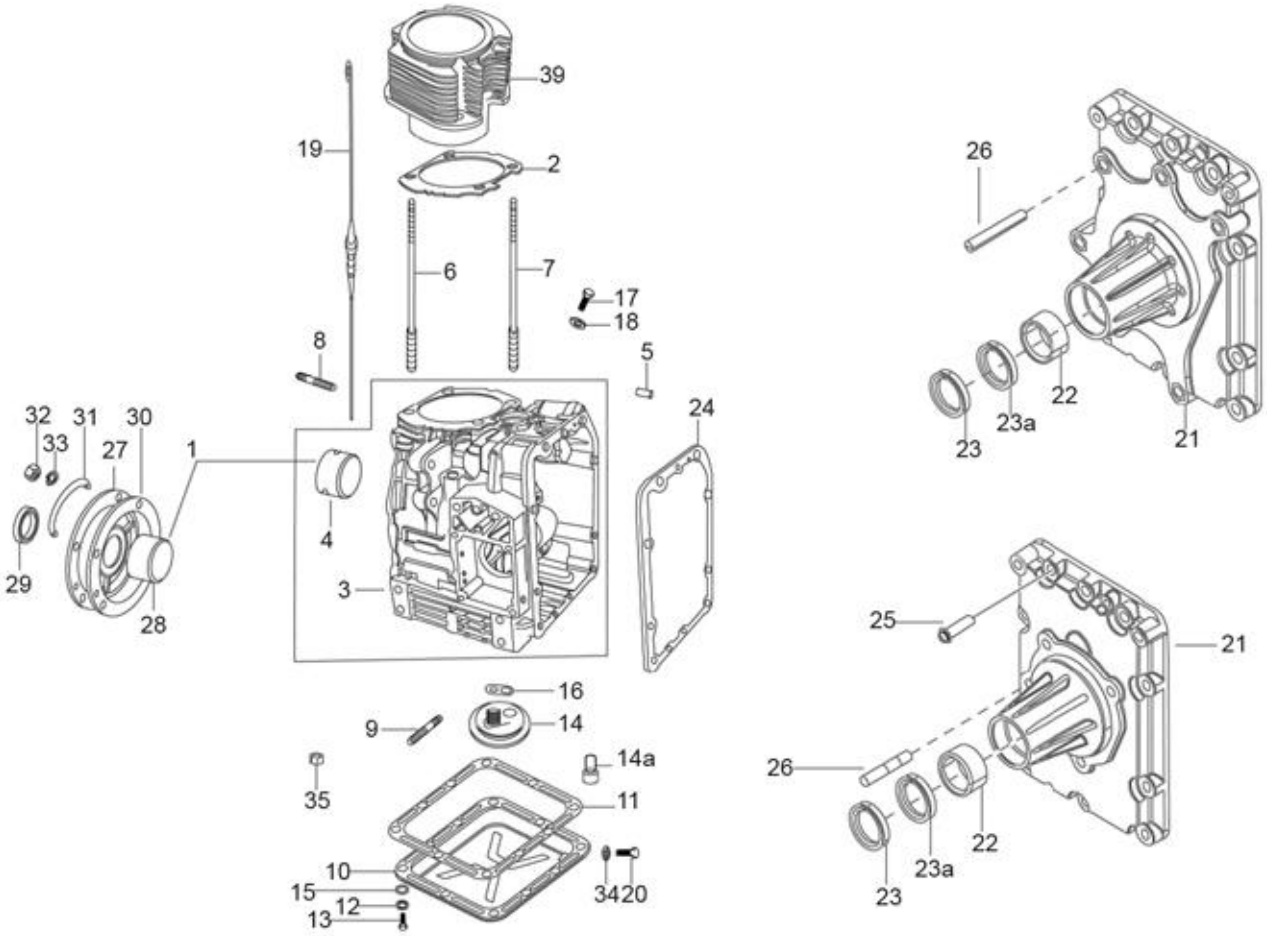
39
19
2
6
7
17
18
8
5
24
32
31
30
33
27
1
4
29
3
28
16
9
14
14a
35
11
10
15
12
13
34
20
26
23
23a
22
21
25
21
26
22
23a
23

1

Print Date: 27-Mar-2022

PLATE-1

CYLENDER, CRANKCASE, OIL PAN, PTO COVER AND CRANKSHAFT SUPPORT

Fig. No.	Part No.	Description	Qty	Remarks
1	E53002224	SET OF BUSHES STD. (CONSISTING OF SR. NO. 4&28) NI	1	BSIII
2	E53006166	JOINT	1	BSII
3	E40002560	CRANKCASE WITH BUSH AND PIN	1	BSII
3	E40002578	CRANKCASE ASSY WITH BUSH (BSII)	1	BSIII
4	E40002263	BUSH CRANKCASE STD	1	Common
4	E40002264	BUSH CRANKCASE 0.25 MM U/S	1	Common
4	E40002265	BUSH CRANKCASE 0.50 MM U/S	1	Common
5	E276846055	DOWEL -PIN	3	Common
6	E5406850108	STUD CYLINDER HEAD	2	BSII
6	E43500540	STUD CYLINDER HEAD ROCKER SHAFT	2	BSIII
7	E43500539	STUD CYLINDER HEAD	2	BSIII
7	E5406850108	STUD CYLINDER HEAD	2	BSII
8	E271678054	STUD FWE SIDE	5	Common
9	E50000506	STUD M8X1.25X34	2	Common
10	E50008099	OIL PAN	1	Common
11	E50006169	JOINT	1	Common
12	E250755507	SPRING WASHER FOR M8	10	Common
13	E406177005	SCREW M8X1.25X22	10	BSII
13	E50002805	COLLER BOLT M8 X 1.25 X 22	10	BSIII
14	E50008883	SUCTION BULB ASSY.	1	Common
14A	E99732047	SCREW FOR BULB	1	BSIII
15	E50000307A	PLAIN WASHER	10	Common
16	E40016141	JOINT SUCTION BULB	1	Common
17	E1177001	BOLT	2	BSII
17	E43502817	HEX BOLT FLANGE M8 X 1.25 X 12	2	BSIII
18	E200467003	JOINT	1	Common
19	E52008924	DIPSTICK	1	Common
20	E50000421	MAGNETIC DRAIN PLUG M12X1.5	1	Common
21	E53011748	COVER PTO	1	BSII
21	E43521745	COVER PTO (SIX STUD)	1	BSIII
22	E90303028	BEARING NEEDLE	1	Common
23	E50006328	OIL SEAL	1	BSII
23A	E9121356	OIL SEAL	1	BSIII
24	E50006101	JOINT 0.4 MM	1	BSII
24	E500460120	JOINT 0.2 MM	1	Common

2

Print Date: 27-Mar-2022

PLATE-1

CYLENDER, CRANKCASE, OIL PAN, PTO COVER AND CRANKSHAFT SUPPORT

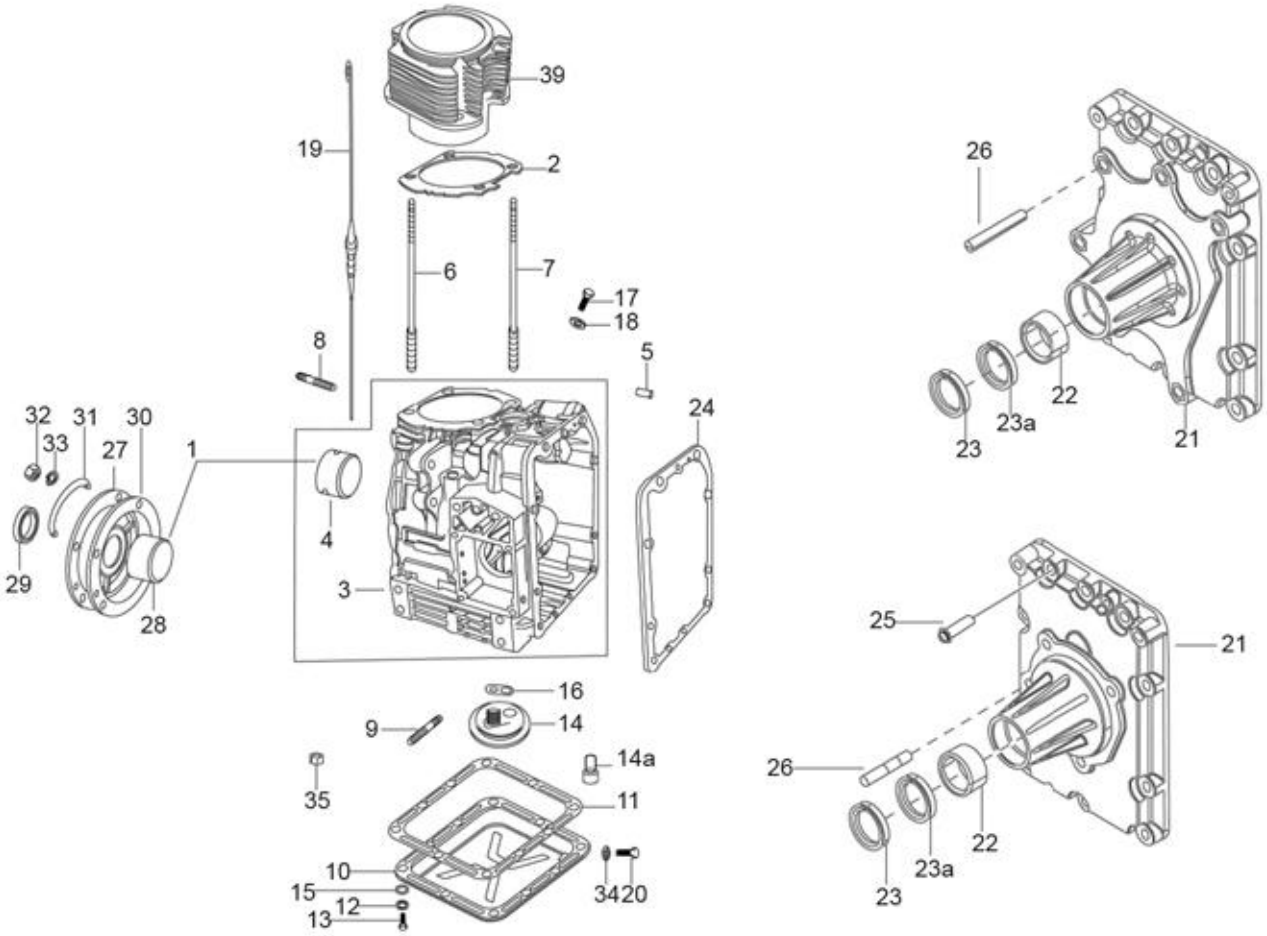
39
19
2
6
7
17
18
8
5
24
32
31
30
33
27
1
4
29
28
3
16
9
14
14a
35
11
10
15
12
13
34
20
26
23
23a
22
21
25
21
26
22
23a
23

3

Print Date: 27-Mar-2022

PLATE-1

CYLENDER, CRANKCASE, OIL PAN, PTO COVER AND CRANKSHAFT SUPPORT

Fig. No.	Part No.	Description	Qty	Remarks
24	E500460102	JOINT 0.3 MM	1	Common
25	E07502804	COLLER BOLT M8 X 1.25 X 30	10	Common
25	E422973030	CAP SCREW FOR M8X1.25 FOR FUEL PUMP (BSII)	2	BSIII
25A	E250755507	SPRING WASHER FOR M8	10	BSII
26	E50000506	STUD M8X1.25X34	4	BSII
26	ESK4336	STUD M8 X 1.25 X 57(PTO COVER)	6	BSIII
27	E40011772	CRANKSHAFT SUPPORT ASSY. GL400	1	Common
28	E53002206	BUSH,FWE STD.	1	BSIII
28	E53002205	BUSH FWE SIDE 1.00 MM U/S	1	BSII
28	E53002210	BUSH FWE SIDE 1.00 MM U/S	1	BSIII
28	E40002266	BUSH CRANKCASE 0.75 MM U/S	1	BSII
28	E53002209	BUSH FWE SIDE 0.75 MM U/S	1	BSIII
28	E40002264	BUSH CRANKCASE 0.25 MM U/S	1	BSII
28	E53002207	BUSH FWE SIDE 0.25 MM U/S	1	BSIII
28	E40002265	BUSH CRANKCASE 0.50 MM U/S	1	BSII
28	E53002208	BUSH FWE SIDE 0.50 MM U/S	1	BSIII
29	ED42548	OILSEAL 520/530/GL400	1	Common
30	E500470103	JOINT 0.2 MM	1	BSII
30	E500470094	JOINT 0.3 MM	1	BSII
31	ESK8832	RETAINER PLATE	3	Common
32	E9324018	NUT M8 X 1.25 X 6.5	5	Common
33	E50000613	MACHINED WASHER 16X8.1X2	5	BSII
33	E250755507	SPRING WASHER FOR M8	5	BSIII
34	E250467014	JOINT 12X19X1(JOINT DRAIN PLUG)	1	Common
35	E500197087	SLEEVE - OIL PAN IN CRANK CASE	2	BSIII
37	ED43340	GUIDING BOLT	1	BSII
38	ED40642	WASHER (BSII) (N.I.)	1	BSII
39	E43502770	CYLINDER GRADE B	1	BSIII
39	E5402380456	CYLINDER BARREL GRADE A	1	BSII
39	E43502705	CYLINDER GRADE A	1	BSIII
39	E5402380457	CYLINDER BARREL GRADE B	1	BSII
40	ESK5565	SET OF JOINTS (N.I.)	1	BSII
41	E43526175	SET OF JOINTS (N.I.)	1	BSIII

4

Print Date: 27-Mar-2022

PLATE-2

CYLINDER HEAD ASSEMBLY & DECOMPRESSION LEVER

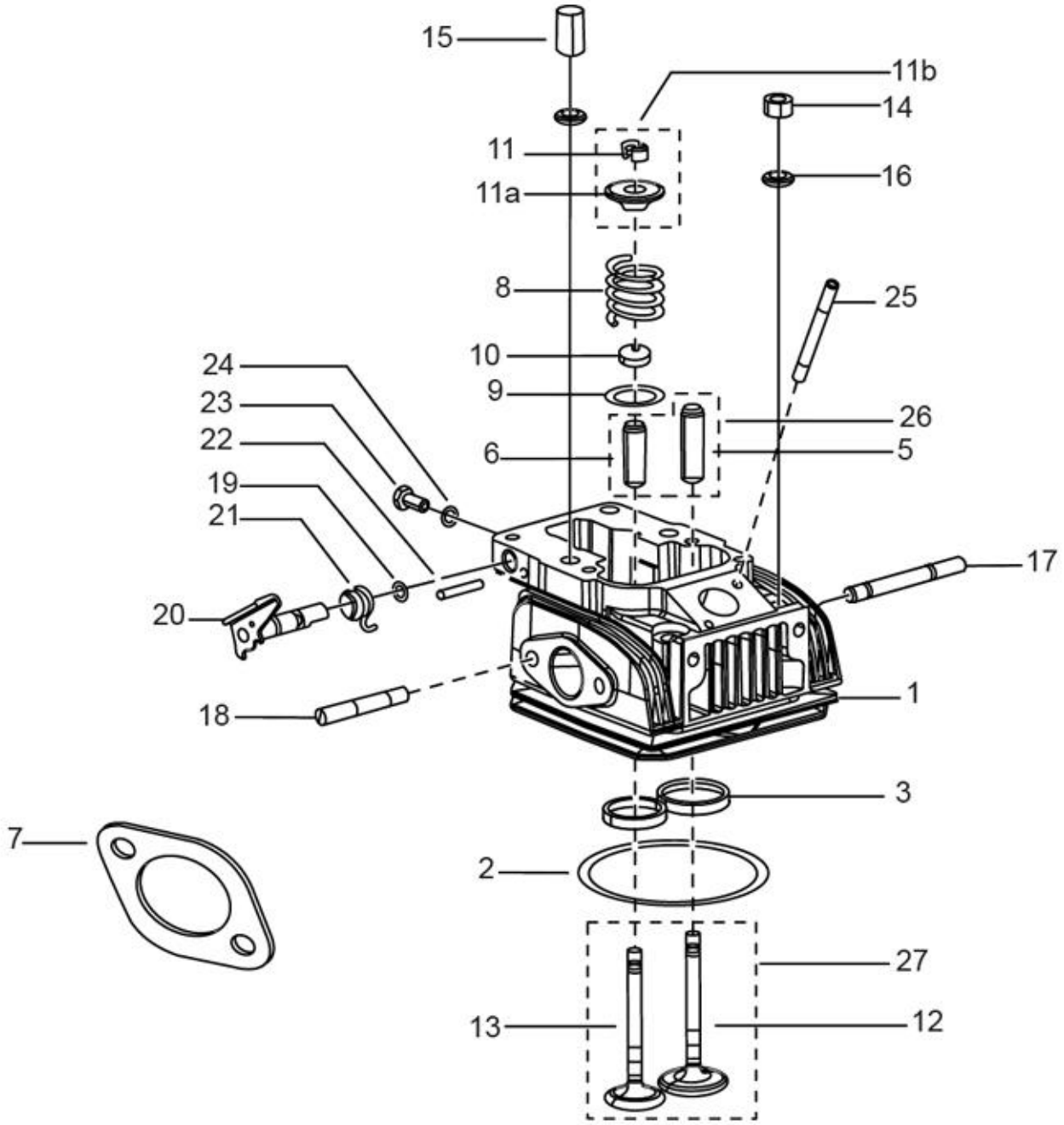
15
11b
14
11
16
11a
8
25
10
24
9
23
26
22
6
5
19
21
17
20
1
18
3
7
2
27
13
12

5

Print Date: 27-Mar-2022

PLATE-2

CYLINDER HEAD ASSEMBLY & DECOMPRESSION LEVER

Fig. No.	Part No.	Description	Qty	Remarks
0	E40010713	CYLINDER HEAD KIT (NI)	1	BSII
1	E43512268	CYLINDER HEAD WITH VALVE GUIDE AND SEAT	1	BSIII
1	E40018345	CYLINDER HEAD ASSY. WITH EXH. STEM	1	BSII
2	E43506182	JOINT CYLINDER HEAD 0.8 MM	1	Common
2	E43506183	JOINT CYLINDER HEAD 0.9 MM	1	Common
2	E40016143	JOINT CYLINDER HEAD 0.5 MM	1	Common
2	E43506181	JOINT CYLINDER HEAD 0.7 MM	1	Common
2	E40026134	JOINT CYL. HEAD (1.0 THK.)	1	Common
2	E43506180	JOINT CYLINDER HEAD 0.6 MM	1	Common
2	E40016144	JOINT CYLINDER HEAD 0.55 MM	1	Common
3	E5508000117	VALVE SEAT INLET	1	Common
4	E5508000118	VALVE SEAT EXHAUST	1	Common
5	E500022105	INT.VAL.GUIDE	1	Common
6	E40002255	EXHAUST VALVE GUIDE	1	BSII
7	E500450092	JOINT INTAKE FLANGE AIR INTAKE	1	Common
8	E500575545	VALVE SPRING	2	Common
9	E5003430070	DISC	2	Common
10	E500213572	CAP INLET VALVE	1	BSII
10	E50006342	VALVE STEM SEAL	1	BSIII
11	E500641036	COLLET ASSY.	2	BSII
11	E43522242	COLLET ASSY. COSISTING OF SR. NO.11A, 11B	2	BSIII
11A	E500640030	SPRING RETAINER TOP	2	Common
11B	E870022109	VALVE COLLETS (MULTY GROOVE)	4	BSIII
12	E43522238	SET OF VALVE CONSISTING OF SR. NO. 12 & 13	1	BSIII
13	ED33454	EXHAUST VALVE	1	BSIII
13	E40008380	EXHAUST VALVE (BSII)	1	BSII
14	E93240076	NUT	2	Common
15	ED40165	DOME NUT	2	Common
16	E97625065	PLAIN WASHER	4	Common
17	E43500573	STUD M8 X 1.25 - INTAKE SIDE	2	BSIII
17	E40000549	STUD AIR INTAKE	2	BSII
18	E50000506	STUD M8X1.25X34	2	BSII
18	ESK4336	STUD M8 X 1.25 X 57(PTO COVER)	2	BSIII
19	E268120034	O RING	1	Common
20	ED40580	DECOMPRESSION SHAFT ASSY.	1	Common

6

Print Date: 27-Mar-2022

PLATE-2

CYLINDER HEAD ASSEMBLY & DECOMPRESSION LEVER

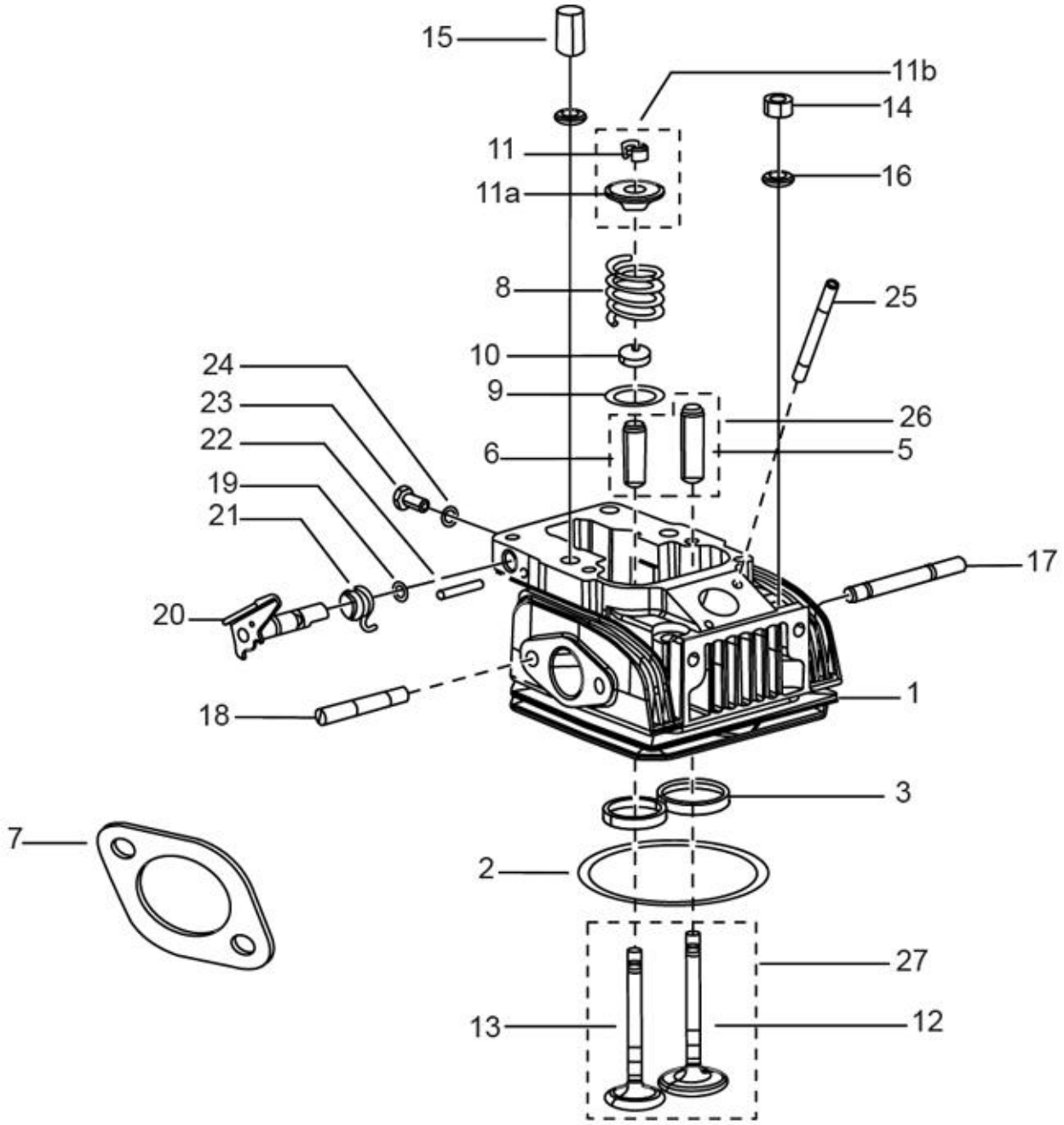
15
11b
14
11
16
11a
8
25
10
24
9
23
26
22
6
5
19
21
17
20
1
18
3
7
2
27
13
12

7

Print Date: 27-Mar-2022

PLATE-2

CYLINDER HEAD ASSEMBLY & DECOMPRESSION LEVER

Fig. No.	Part No.	Description	Qty	Remarks
21	E5005680046	RETURN SPRING	1	Common
22	E50000901	SPRING DOWEL	1	Common
23	E505193049	BOLT	1	Common
24	E260467001	JOINT	1	Common
25	E500676035	STUD M6X1X67	2	Common
26	E40012272	VALVE GUIDE SET	1	BSII
26	E43522234	SET OF VALVE GUIDE CONSISTING OF 5 & 6	1	BSIII
27	E40012271	VALVE SET MULTIGROOVE	1	BSII
27	E43522238	SET OF VALVE CONSISTING OF SR. NO. 12 & 13	1	BSIII
27	E400022104	SET OF VALVES (BSII)	1	BSII

8

Print Date: 27-Mar-2022

PLATE-3
ROCKER ARM COVER

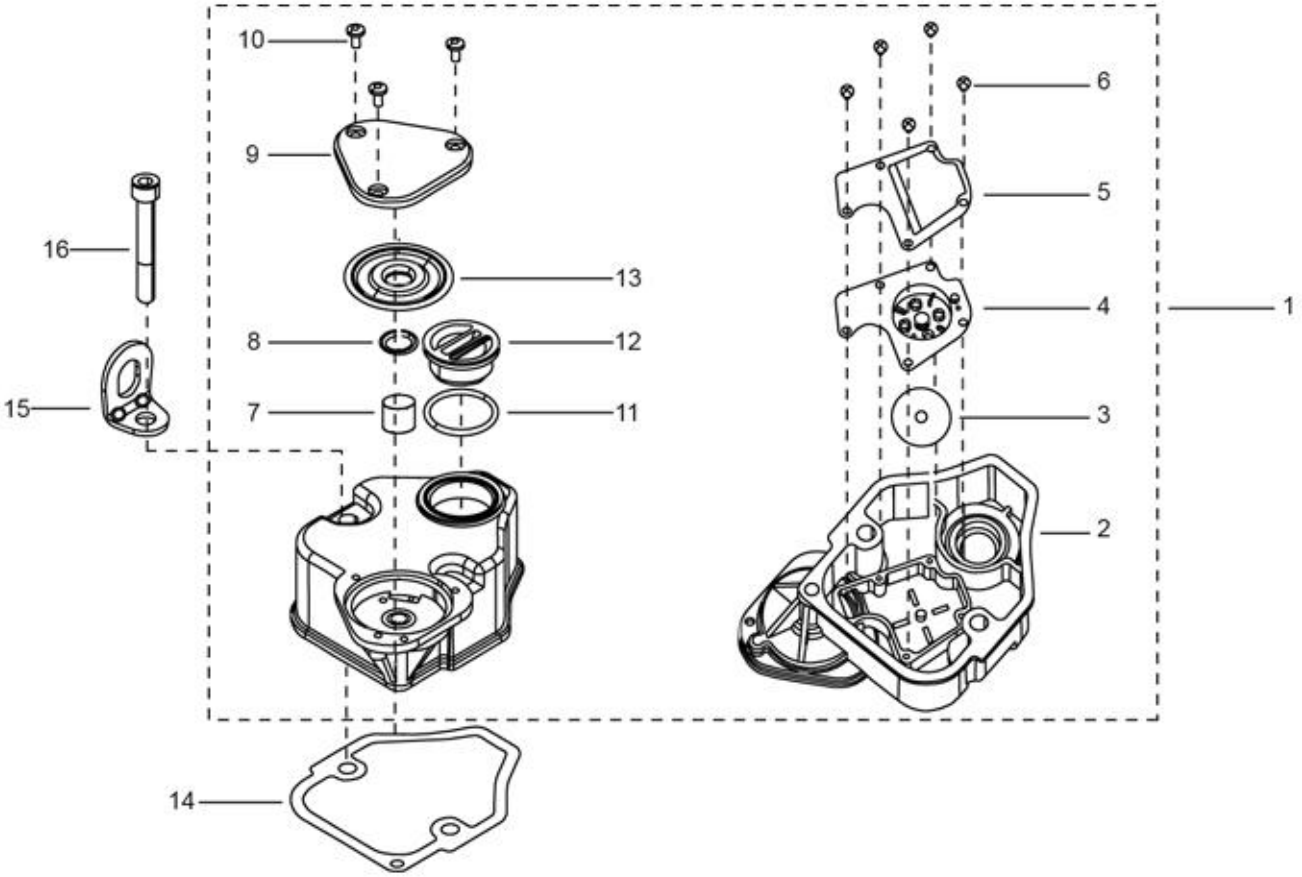
10
9
16
13
8
12
15
7
11
14
6
5
4
1
3
2

9

Print Date: 27-Mar-2022

PLATE-3

ROCKER ARM COVER

Fig. No.	Part No.	Description	Qty	Remarks
1	ED41789	ROCKER COVER ASSY. LM TYPE (N.I.)	1	BSII
1	E43506639	ROCKER COVER BOX ASSY.WITH OIL FILLING PLUG (SR. NO. 38, 42, 42A) (N.I.)	1	BSIII
2	E40006630	ROCKER COVER	1	BSII
3	E1969693007	SAFETY VALVE LM TYPE	1	BSII
3	ED43751	SAFETY VALVE	1	BSIII
4	E1967980064	CUP FOR FILTER	1	Common
5	E1965140021	SHEET STEEL	1	Common
6	E51981002	SCREW	1	Common
7	E1965755128	SPRING LM TYPE	1	Common
8	E1967625270	WASHER FOR SAFETY VALVE	1	Common
9	E40020417	BREATHER COVER NYLON	1	BSIII
9	E1962750311	TRIANGULAR BREATHER COVER (AI)	1	BSII
10	ESK8694	PHILLIPS HEAD SCREW	3	Common
11	E61200082	O RING	1	Common
12	ED42011	OIL FILLING PLUG	1	Common
13	ED43751	SAFETY VALVE	1	Common
14	E40016138	JOINT	1	Common
15	E904850603	LIFTING HOOK	1	Common
16	E50000114	BOLT (ALLEN)	2	Common
17	E43522257	BREATHER KIT (ED43751)	1	BSIII (NI)
17	ED43405	BREATHER KIT	1	BSII(NI)

10

Print Date: 27-Mar-2022

PLATE-4

CRANKSHAFT, PISTON AND CON ROD ASSY

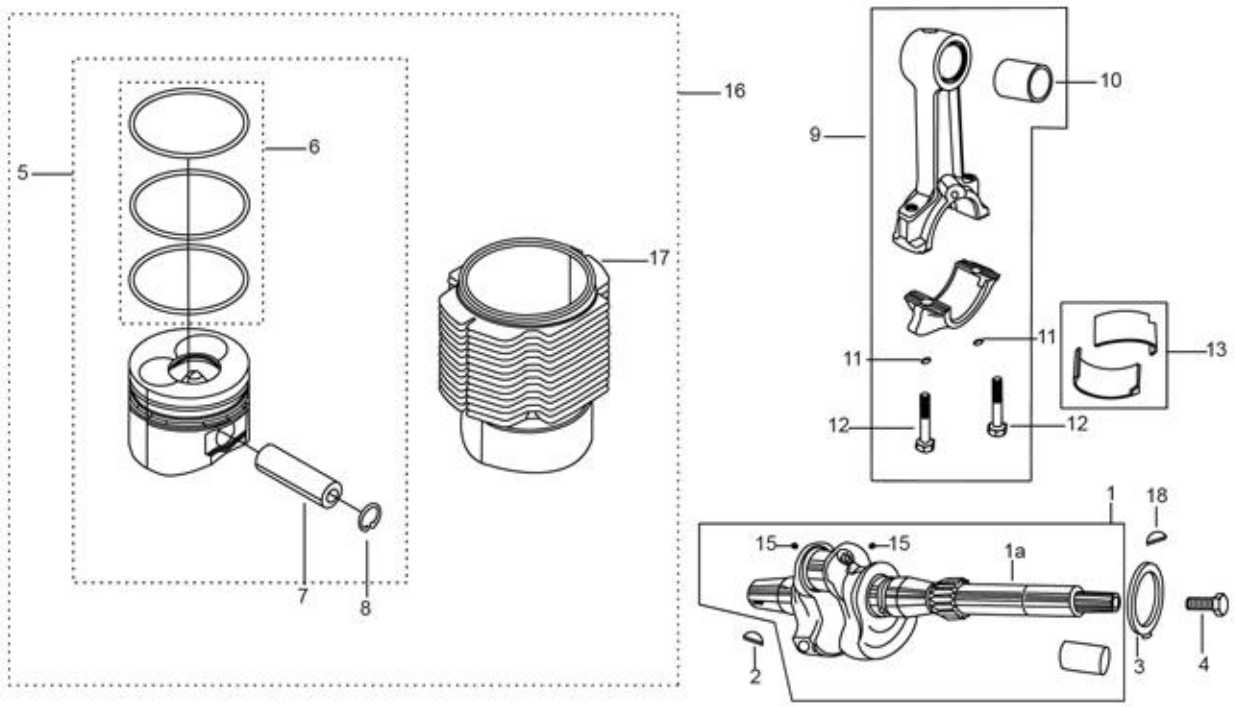
16
10
9
6
5
17
11
11
13
12
12
1
18
15
15
1a
7
8
2
3
4

11

Print Date: 27-Mar-2022

PLATE-4

CRANKSHAFT, PISTON AND CON ROD ASSY

Fig. No.	Part No.	Description	Qty	Remarks
1	E43510715	CRANKSHAFT WITH KEY CONSIST OF 8 & 12.	1	BSIII
1	E50006060	CRANKSHAFT	1	BSII
2	E500228048	KEY - F.W.E.	1	Common
3	E500125708A	THRUST WASHER	1	Common
4	E47177007	SCREW M8X1.25X30	1	Common
5	E43520572A	PISTON ASSY GRADE B	1	BSIII
5	E40020509	PISTON ASSLY. A MOD BS-II	1	BSII
5	E43520571	PISTON ASSY. GRADE A	1	BSIII
5	E40010597	PISTON ASSY. STD (GRADE A)	1	BSII
5	E40020510	PISTON ASSLY. B MOD BS-II	1	BSII
6	E43511440PA	KIT OF PISTON RING SET STD-BS-III	1	BSIII
6	E40011420PA	KIT OF PISTON RING MOD BS-II	1	BSII
7	E5408480091A	GUGEON PIN	1	Common
8	E3124017	CIRCLIP 500 SR	2	Common
9	E50009023	CONNECTING ROD ASSY.	1	BSII
9	E43509046	CONNECTING ROD ASSY - FRACTURED	1	BSIII
10	E50009205	BUSH SMALL END CON ROD	1	Common
11	E50000307A	PLAIN WASHER	2	BSIII
12	E50000160A	BOLT M8X1X45 (CON. ROD)	2	Common
13	E50002296A	LARGE END BEARING(SET OF 2)	1	BSII
13	ED40718	LARGE END BEARING 0.25 MM U/S KOEL	1	Common
13	ED40719	LARGE END BEARING 0.50 MM U/S KOEL	1	Common
14	ED42396	CON ROD BOLT KIT	1	BSII
14	E43510791	FRACTURED CON ROD BOLT KIT	1	BSIII
15	E500900038	PLUG OIL HOLE	2	BSIII
16	E40020513A	BP KIT MOD BS-II	1	BSII
16	E43510714A	CYLINDER AND PISTON ASSY KIT-BSIII	1	BSIII
17	E5402380456	CYLINDER BARREL GRADE A	1	BSII
17	E43502705	CYLINDER GRADE A	1	BSIII
17	E5402380457	CYLINDER BARREL GRADE B	1	BSII
17	E43502770	CYLINDER GRADE B	1	BSIII
18	E70228047	KEY PTO	1	Common

12

Print Date: 27-Mar-2022

PLATE-5

CAM SHAFT, PUSH ROD AND ROCKER ARMS

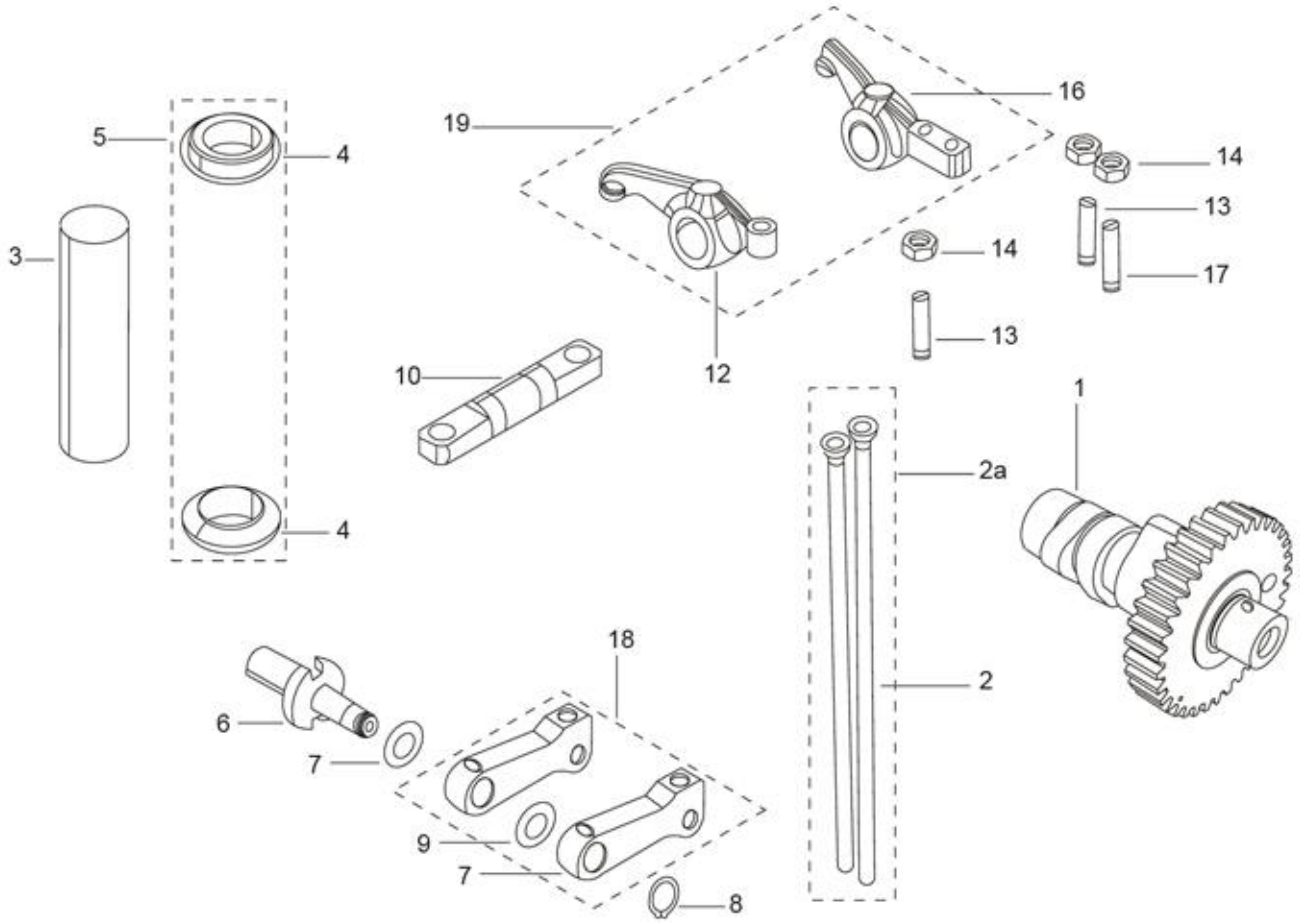
5
4
3
4
19
16
14
13
14
17
13
12
10
1
2a
2
18
6
7
9
7
8

13

Print Date: 27-Mar-2022

PLATE-5

CAM SHAFT, PUSH ROD AND ROCKER ARMS

Fig. No.	Part No.	Description	Qty	Remarks
1	E400060112	CAM SHAFT (BSII)	1	Common for BSII & BSIII
2	E500141016	PUSH ROD	2	BSII
2	E43507331	PUSH ROD 500 SR.	2	BSIII
2A	E50007334	SET OF PUSHES	1	BSII
2A	E43507359	SET OF PUSHRODS	1	BSIII
3	E5009520029	PUSH ROD TUBE	1	BSII
3	E43507330	PUSH ROD TUBE	1	BSIII
4	E500474018	SLEEVE-PUSH ROD TUBE	1	BSII
4	E40006428	JOINT PUSH ROD SLEEVE (G400AG)	1	BSIII
5	E43526174	SLEEVE SET CONSISTING OF 4 & 5	1	BSIII
5	E50016170	SET OF RUBBER SLEEVES	1	BSII
6	ED30956	PIN LH THREAD	1	Common
7	E500755006	DISTANCE PIECE	2	Common
8	E47124004	CIRCLIP	1	Common
9	E5005271054	CAM FOLLOWER LEVER	2	Common
10	E5406045038	ROCKER FULCRUM	1	Common
11	E53005167	INLET ROCKER LEVER ASSY. CONSISTING OF SR.NO. 12;13;14 (N.I.)	1	NS , Service on Individual Part No.
12	E50005136	ROCKER LEVER INLET	1	Common
13	E500985048	ADJUSTING SCREW	2	Common
14	E105324008	NUT HEX -OIL SEPARATOR MOUNTING	3	Common
15	E53005168	EXHAUST ROCKER LEVER ASSY. CONSISTING OF SR.NO. 13;14;16;17 (N.I.)	1	NS , Service on Individual Part No.
16	E50005137	ROCKER LEVER EXHAUST	1	Common
17	E505985052	DECOMPRESSOR OPERATING SCREW	1	Common
18	ED43409	CAM FOLLOWER KIT	1	Common
19	E53005170	SET OF ROCKER LEVERS	1	Common

14

Print Date: 27-Mar-2022

PLATE-6

GOVERNOR, FUEL PUMP CONTROL LEVER, L.O. PUMP ASSY. AND SPIN-ON TYPE LUB OIL FILTER

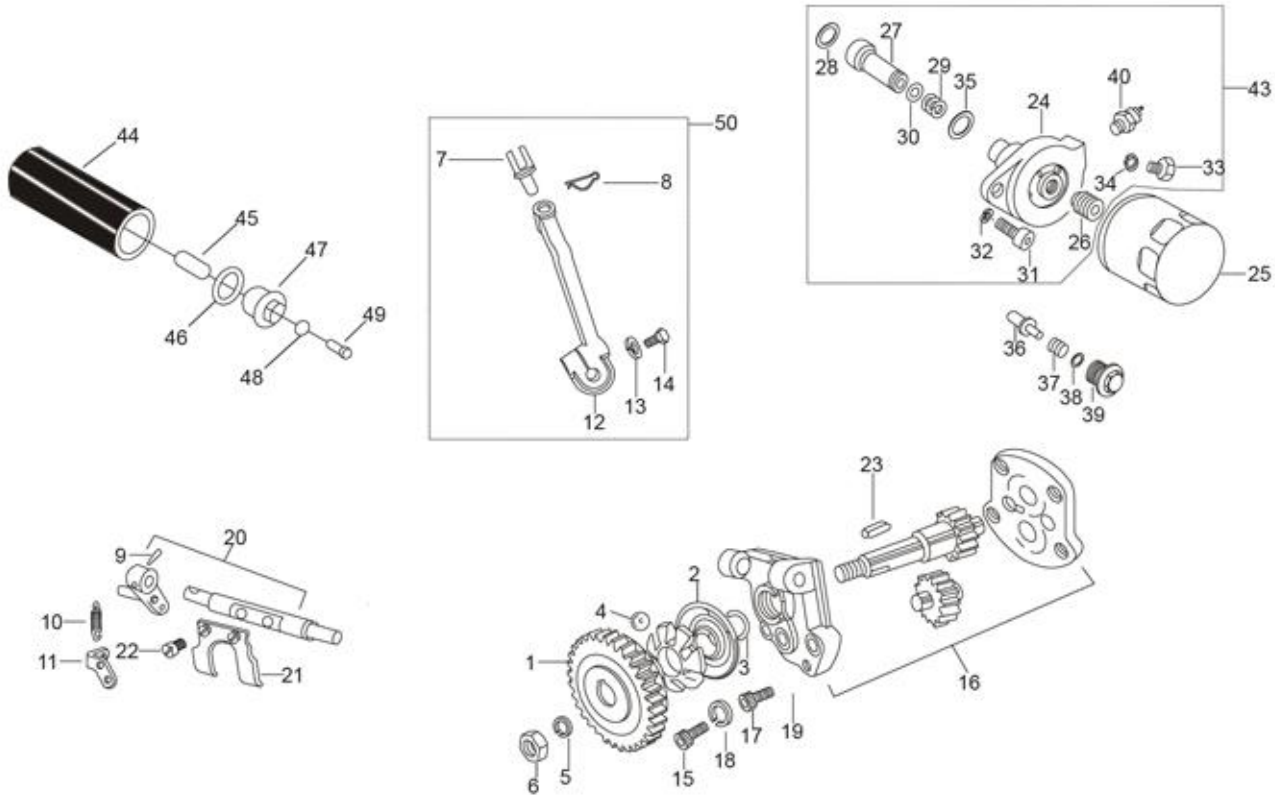
44
45
46
47
48
49
50
7
8
12
13
14
43
27
28
29
35
30
24
40
33
34
32
31
26
25
36
37
38
39
23
20
9
10
11
22
21
2
4
1
3
16
17
19
18
15
6
5

15

Print Date: 27-Mar-2022

PLATE-6

GOVERNOR, FUEL PUMP CONTROL LEVER, L.O. PUMP ASSY. AND SPIN-ON TYPE LUB OIL FILTER

Fig. No.	Part No.	Description	Qty	Remarks
1	E50010157	GOVERNOR GEAR	1	Common
2	E500208572	GOVERNOR BELL (STEEL)	1	Common
3	E500116011	CIRCLIP	1	Common
4	E3824509	BALL	6	Common
5	E202756511	SPRING WASHER FOR M10	1	Common
6	E500324066	NUT	1	Common
7	E5406140483	PIN - FDC LEVER	1	Common
8	E7102800049	SPLIT PIN	1	BSIII
9	E276843023	TAPER PIN	1	BSII
10	E5205801462	SPRING EXCESS FUEL	1	Common
11	E5006371045	ANCHOR PLATE	1	Common
12	E400051135	FUEL PUMP R C LEVER ASSY (BSII)	1	BSIII
13	E250755504	SPRING WASHER FOR M6	1	Common
14	E276176034	BOLT M6X1X25	1	Common
15	E264973008	CAP SCREW	1	Common
16	E52006709	LUB OIL PUMP ASSY.	1	Common
17	E50000437	HEX SOCKET HEAD SCREW	4	Common
18	E1756504	SPRING WASHER M6- OIL SEPARATOR 2	2	Common
19	E250755504	SPRING WASHER FOR M6	3	Common
20	ED43350	GOVERNOR LEVER ASSY.(ALTERNATIVE)	1	Common
21	E500520134	GOVERNOR LEVER (INLET)	1	Common
22	E51981002	SCREW	2	Common
23	E500220013	KEY	1	Common
24	ED21235	FLANGE	1	Common
25	ED42244	SPIN ON LUB OIL FILTER	1	Common
26	ED41208	STUD	1	Common
27	E50006495029	PISTON	1	Common
28	E50001213143	O RING LUB OIL FILTER	1	Common
29	E50005625006	SPRING	1	Common
30	E904120213	O RING	1	Common
31	E260973027	CAP SCREW M8X 1.25	2	Common
32	E1756507	SPRING WASHER M8	1	BSII
32	E50000613	MACHINED WASHER 16X8.1X2	1	BSIII
33	E1177001	BOLT	1	Common
34	E200467003	JOINT	1	Common

16

Print Date: 27-Mar-2022

PLATE-6

GOVERNOR, FUEL PUMP CONTROL LEVER, L.O. PUMP ASSY. AND SPIN-ON TYPE LUB OIL FILTER

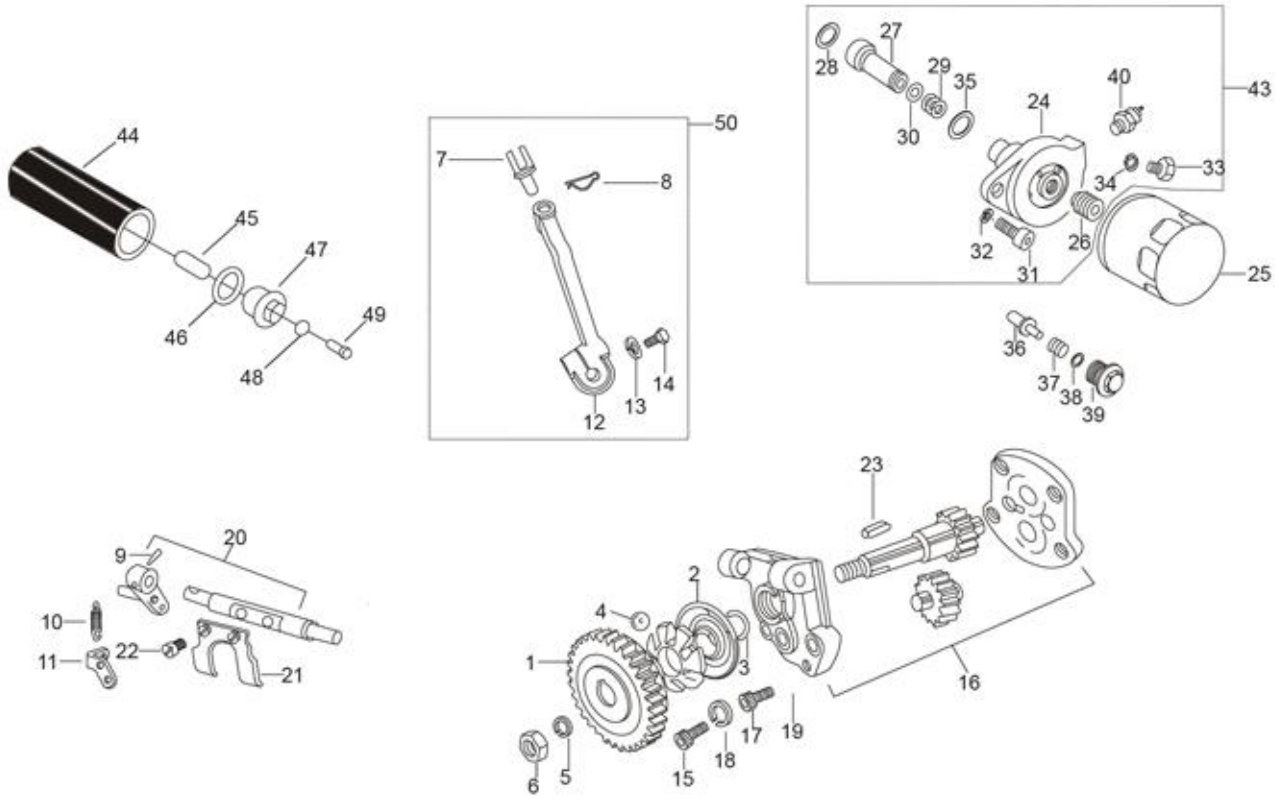
44
45
46
47
48
49
50
7
8
12
13
14
27
28
29
35
30
24
40
43
33
34
32
31
26
25
36
37
38
39
23
9
20
10
11
22
21
2
4
1
3
16
17
19
6
5
15
18

17

Print Date: 27-Mar-2022

PLATE-6

GOVERNOR, FUEL PUMP CONTROL LEVER, L.O. PUMP ASSY. AND SPIN-ON TYPE LUB OIL FILTER

Fig. No.	Part No.	Description	Qty	Remarks
35	E260120016	O RING	1	Common
36	E5609680013	RELIEF VALVE BODY	1	Common
37	E500575549	SPRING	1	Common
38	E200467021	JOINT	1	Common
39	E50000475	PLUG RELIEF VALVE	1	Common
40	ED41447	OIL PRESSURE SWITCH - PARALLEL THREAD	1	Common
41	E1762507	PLAIN WASHER FOR M6 FOR FDC LEVER (BSII) (N.I.)	1	BSII
42	E105324008	NUT HEX -OIL SEPARATOR MOUNTING	1	BSII
43	E40001816	FLANGE ASSY. L O FILTER	1	Common
44	E500217519	FILTER ELEMENT	1	Common
45	E5000572536	SPRING	1	Common
46	E260120016	O RING	1	Common
47	E5009060011	PLUG ON OIL FILTER	1	Common
48	E260467001	JOINT	1	Common
49	E9176003	HEX BOLT	1	Common
50	E400051135	FUEL PUMP R C LEVER ASSY (BSII)	1	Common

18

Print Date: 27-Mar-2022

PLATE-7

REMOTE THROTTLE AND STOP CONTROL

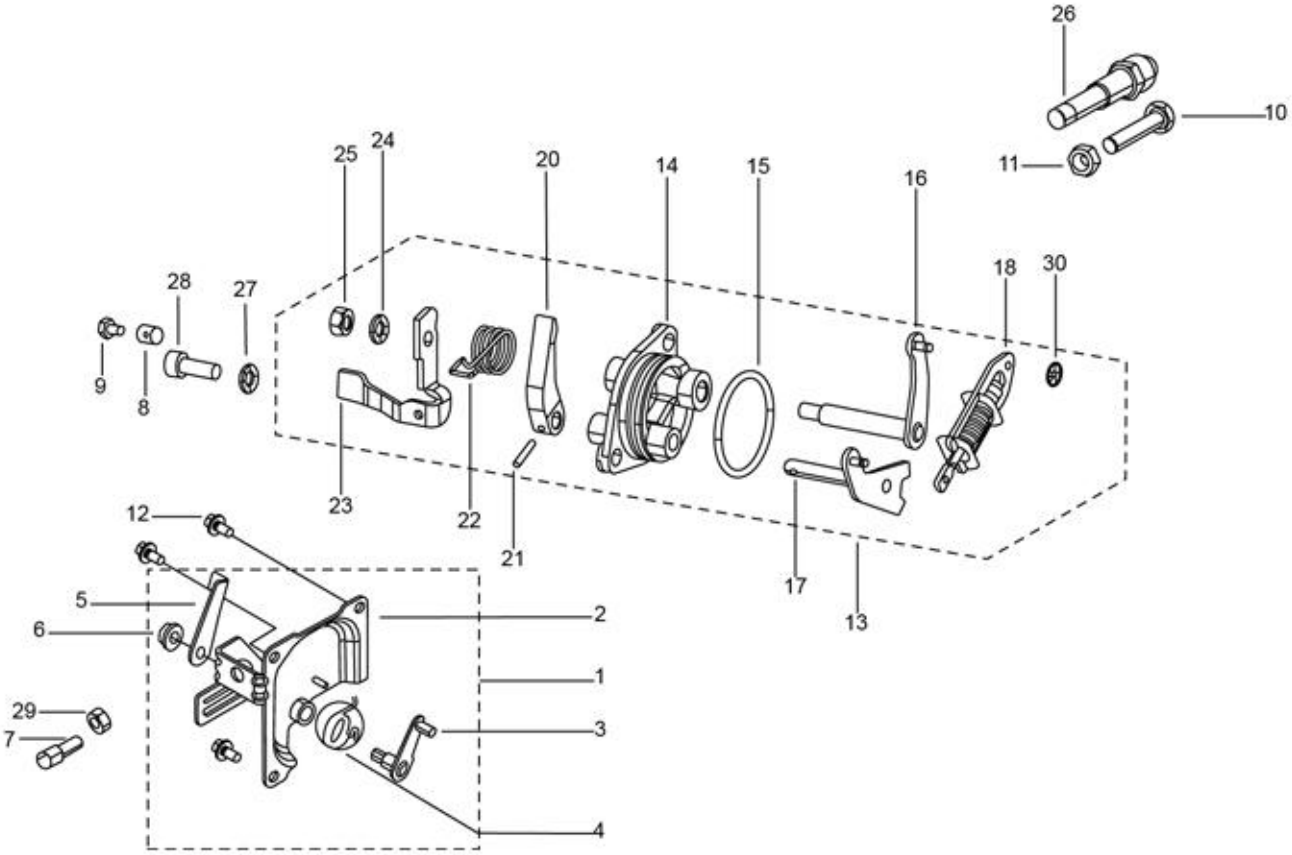
26
10
11
25
24
20
14
15
16
18
30
28
27
9
8
23
22
21
17
13
12
5
6
2
1
29
7
3
4

19

Print Date: 27-Mar-2022

PLATE-7

REMOTE THROTTLE AND STOP CONTROL

Fig. No.	Part No.	Description	Qty	Remarks
1	E50010174	COVER REMOTE THROTTLE STOP CONTROL (CONSISTING OF SR.NO. 2 TO 6; 12 & 13) (N.I.)	1	BSII
1	E43501847	REMOTE THROTTLE & STOP CONTROL FOR REAR MTG. ENGINE (2,3,5,6,12 & 13)	1	BSIII
2	E50010174	COVER REMOTE THROTTLE STOP CONTROL (CONSISTING OF SR.NO. 2 TO 6; 12 & 13) (N.I.)	1	BSII
3	E500520260	STOP LEVER INTERNAL	1	Common
4	E500568044	SPRING STOP LEVER RETURN	1	Common
5	E500520214	EXTERNAL STOP LEVER	1	Common
6	E07502811	COLLAR NUT M6 X 1	1	Common
7	E50000452	TERMINAL	2	Common
8	E90600031	CABLE ANCHOR	1	Common
9	ED41228	SCREW	1	Common
10	E07500428	MAX SPEED SETTING SCREW	1	Common
10	E91760028	BOLT	1	Common
11	E105324008	NUT HEX -OIL SEPARATOR MOUNTING	2	Common
12	E07502813	COLLOR BOLT M6 X 12	2	BSIII
13	E40015173	GOVERNOR SUPPORT ASSY. (CONSISTING OF SR.NO. 4;6;11;22 TO 30)	1	BSII
13	E43515174	GOVERNOR SUPPORT ASSEMBLY (INCLUDES 30 TO 38)	1	BSIII
14	E40009644	SUPPORT GOVERNOR LEVER	1	Common
15	E52006205	O RING	1	Common
16	E5205200777	UPPER LEVER WITH PIN	1	Common
17	E40015173	GOVERNOR SUPPORT ASSY. (CONSISTING OF SR.NO. 4;6;11;22 TO 30)	1	Common
18	E40009645	GOVERNOR SPRING ASSEMBLY	1	Common
19	E5201160056	CIRCLIP	2	Common
20	E43515174	GOVERNOR SUPPORT ASSEMBLY (INCLUDES 30 TO 38)	1	Common
21	E98420002	TAPER PIN	1	Common
22	E500568043	SPRING	1	Common
23	E5005200293	THROTTLE LEVER	1	BSII
24	E1756504	SPRING WASHER M6- OIL SEPARATOR 2	1	Common
25	E105324008	NUT HEX -OIL SEPARATOR MOUNTING	1	Common
26	E400101102	EXCESSFUEL DEVICE ASSY (BSII)	1	Common
27	E1756504	SPRING WASHER M6- OIL SEPARATOR 2	1	Common
28	E270973010	CAP SCREW (TUBE OIL ADAPTER)	2	Common
29	E105324008	NUT HEX -OIL SEPARATOR MOUNTING	2	Common
30	E27762505	MACHINED WASHER	2	Common

20

Print Date: 27-Mar-2022

PLATE-8

FEED PUMP, FUEL FILTER AND FUEL PIPE LINES

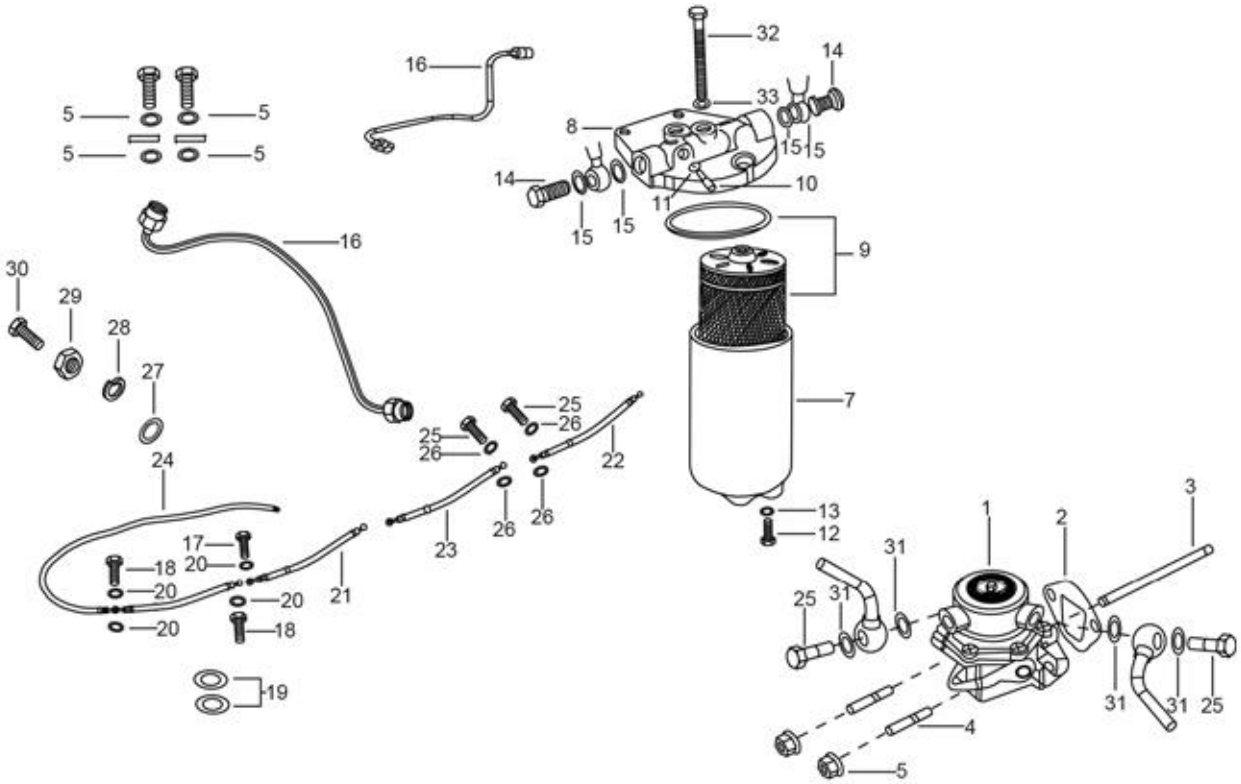
32
14
16
33
5
5
8
15
15
5
5
14
10
11
15
15
16
9
30
29
28
27
7
25
26
25
26
22
24
3
1
2
13
12
26
26
23
17
20
31
18
20
25
31
21
20
20
18
19
31
31
25
4
5

21

Print Date: 27-Mar-2022

PLATE-8

FEED PUMP, FUEL FILTER AND FUEL PIPE LINES

Fig. No.	Part No.	Description	Qty	Remarks
1	E40006819	FEED PUMP (AUTO LEC) NEW	1	Common
2	E5604580049	JOINT 0.5 MM	1	BSII
2	E50016133	JOINT 0.2MM (FEED PUMP)	1	BSIII
2	E5604580170	JOINT 0.8 MM	1	Common
2	E5604580169	JOINT 0.4 MM	1	Common
3	ED41931	PIN FOR FEED PUMP (BSII)	1	Common
4	E50000506	STUD M8X1.25X34	2	Common
5	E9324018	NUT M8 X 1.25 X 6.5	2	Common
5	E07502810	COLLAR NUT M8 X 1.25	2	Common
6	F002H20108	FILTER ASSY.	1	Common
7	F002H20340	BOTTOM BOWL	1	Common
8	F002H20333	FILTER TOP COVER	1	Common
9	F002H24593	DIESEL FILTER	1	Common
10	9411033412	HEXAGON SCREW	1	Common
11	2916710602	FLAT SEAL RING	2	Common
12	9411033412	HEXAGON SCREW	1	Common
13	1413453025	SEALING WASHER	1	Common
14	E07500819	BANJO BOLT	1	Common
15	E07506189	JOINT 14X20X1.5 THICK	4	Common
16	E43501049	HIGH PRESSURE PIPE	1	BSIII
16	E40001008	HIGH PRESSURE PIPE (BSII)	1	BSII
17	E7101901012	BANJO BOLT PUMP INLET	1	Common
18	E1441570056	BANJO BOLT OVERFLOW	2	BSII
19	E40000687	JOINT	2	BSII
19	E904467015	JOINT	2	BSIII
20	E200467003	JOINT	4	BSII
21	E40017130	PIPE FEED PUMP TO FILTER	1	BSII
21	E43527185	FUEL PIPE (FEED PUMP TO FILTER)	1	BSIII
22	E40017131	FUEL PIPE (TANK TO FEED PUMP)	1	Common
23	ED41150	PIPE FILTER TO FUEL PUMP	1	BSII
23	E43527184	FUEL PIPE (FILTER TO FUEL PUMP)	2	BSIII
24	ED31570	PIPE OVERFLOW	1	BSII
24	E43527167	OVERFLOW & BLEEDING PIPE ASSY.	1	BSIII
24	E40027131	OVERFLOW & BLEEDING PIPE ASSY.	1	BSII
25	E91901030	BANJO BOLT - FEED PUMP	2	BSII

22

Print Date: 27-Mar-2022

PLATE-8

FEED PUMP, FUEL FILTER AND FUEL PIPE LINES

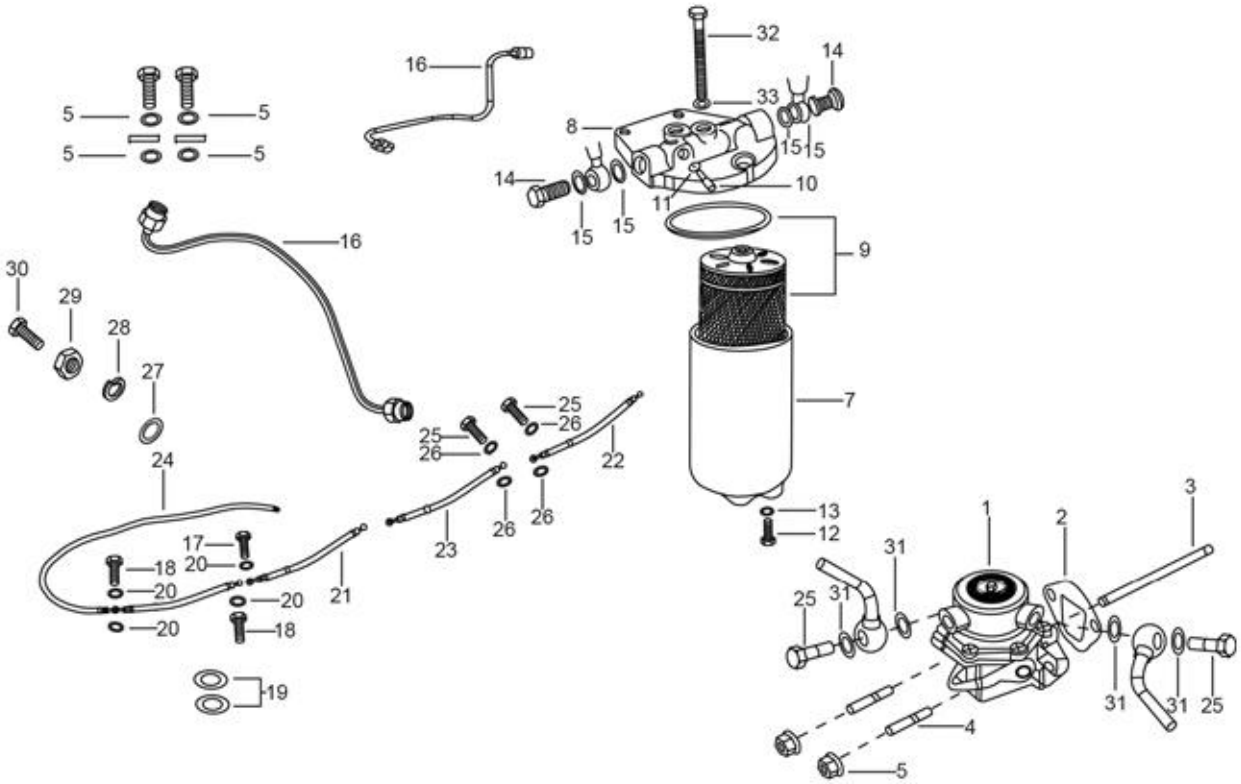
32
14
16
33
5
5
8
15
15
5
5
14
10
11
15
15
16
9
30
29
28
27
7
25
26
25
26
22
24
3
1
2
13
12
26
26
23
17
20
31
18
20
21
25
31
20
20
18
19
31
31
25
4
5

23

Print Date: 27-Mar-2022

PLATE-8

FEED PUMP, FUEL FILTER AND FUEL PIPE LINES

Fig. No.	Part No.	Description	Qty	Remarks
26	E94670059	JOINT - BANJO BOLT	4	BSII
27	13861	PLAIN WASHER 20X8.2X2.5	2	Common
28	016408	SPRING WASHER	2	Common
29	20108	HEX NUT M8	2	Common
30	30072	HEX HEAD BOLT M8 X 35	2	Common
31	E283467036	JOINT	4	BSIII
32	2911161261	SCREW	1	Common
33	2916710603	FLAT SEAL RING	1	Common

24

Print Date: 27-Mar-2022

PLATE-9

FUEL INJECTION PUMP AND INJECTOR ASSY

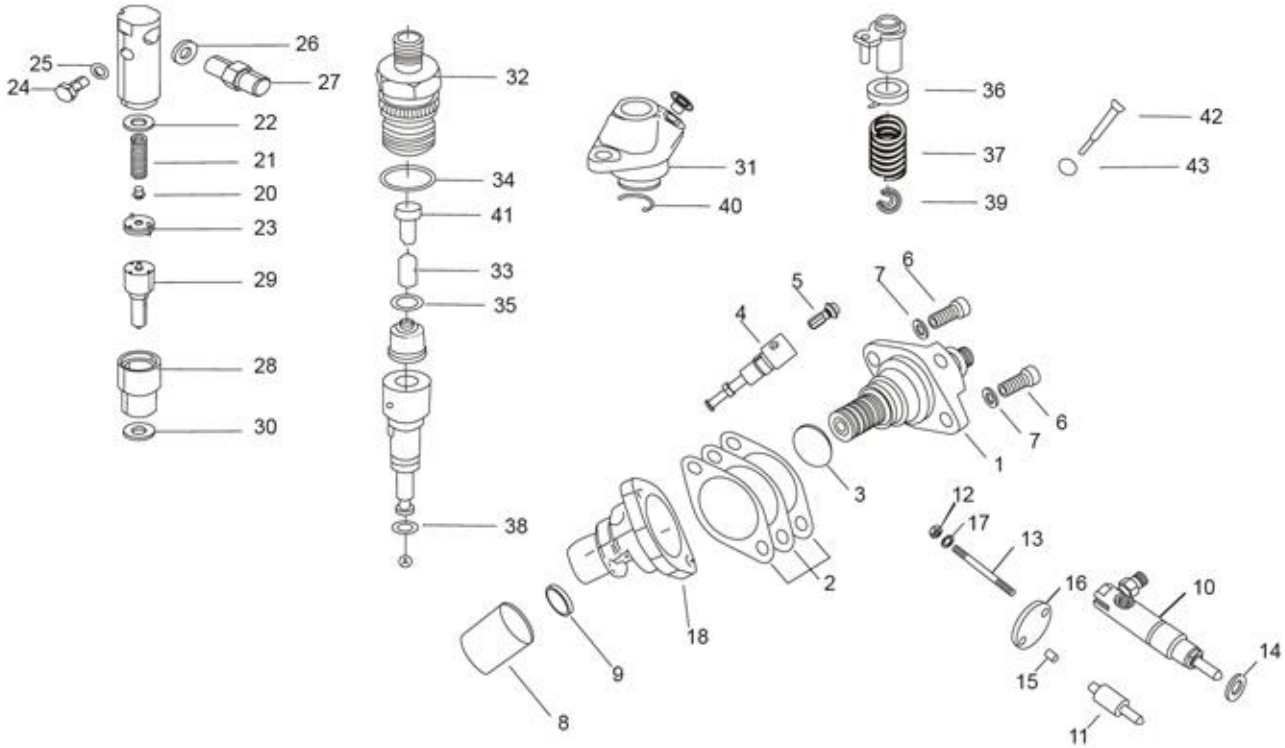
25
24
26
27
22
21
20
23
29
28
30
32
34
41
33
35
38
31
40
36
37
39
42
43
5
7
6
4
7
6
1
3
12
17
13
2
16
10
18
9
15
14
8
11

25

Print Date: 27-Mar-2022

PLATE-9

FUEL INJECTION PUMP AND INJECTOR ASSY

Fig. No.	Part No.	Description	Qty	Remarks
1	F002F50006	FUEL INJECTION PUMP GL 400 BS-II	1	BSIII
2	E500458024	SHIM 0.5MM	1	BSII
2	E5004580057	SHIM 0.05MM FOR FUEL PUMP	1	BSIII
2	E500458023	SHIM 0.3MM	1	BSII
2	E500458029	SHIM 0.1MM	1	Common
2	ED42723	JOINT FOR FIP CASING (0.5MM THICK)	1	BSIII
3	E91200087	O RING	1	BSII
4	F002B10538	ELEMENT MICO	1	BSII
4	F002B10645	ELEMENT (D-43343)	1	BSIII
5	F002B70057	DELIVERY VALVE BS-2	1	BSII
6	E422973030	CAP SCREW FOR M8X1.25 FOR FUEL PUMP (BSII)	1	Common
7	E50000613	MACHINED WASHER 16X8.1X2	2	BSII
7	E1756507	SPRING WASHER M8	2	BSIII
8	3418700004	ROLLER TAPPET	1	BSIII
9	E500600036	SPACER	1	BSII
10	F002C7Z112	INJECTOR ASSY - EURO II	1	Common
11	F002C40521	NOZZLE MICO	1	BSII
11	F002C40562	NOZZLE	1	BSIII
12	E105324008	NUT HEX -OIL SEPARATOR MOUNTING	2	BSII
12	E07502811	COLLAR NUT M6 X 1	2	BSIII
13	E500676035	STUD M6X1X67	2	BSII
14	ED41236	JOINT 0.5MM	1	BSII
14	ED40893	JOINT 2MM	1	BSII
14	ED41237	JOINT 1MM	1	BSII
15	E500843036	DOWEL PIN	1	Common
16	E50025503	FLANGE (INJECTOR)	1	Common
17	E1756504	SPRING WASHER M6- OIL SEPARATOR 2	2	BSII
18	ED31943	FIP CASING (BSII) (N.I.)	1	Common
19	ED42723	JOINT FOR FIP CASING (0.5MM THICK)	1	BSII
20	2433124388	PRESSURE BOLT	1	BSIII
21	2434614030	SPRING	1	BSIII
22	2430136166	DISTANCE PIECE	1	BSIII
23	2430136166	DISTANCE PIECE	1	BSIII
24	2911232700	BANJO BOLT	1	BSIII
25	2916710603	FLAT SEAL RING	2	BSIII

26

Print Date: 27-Mar-2022

PLATE-9

FUEL INJECTION PUMP AND INJECTOR ASSY

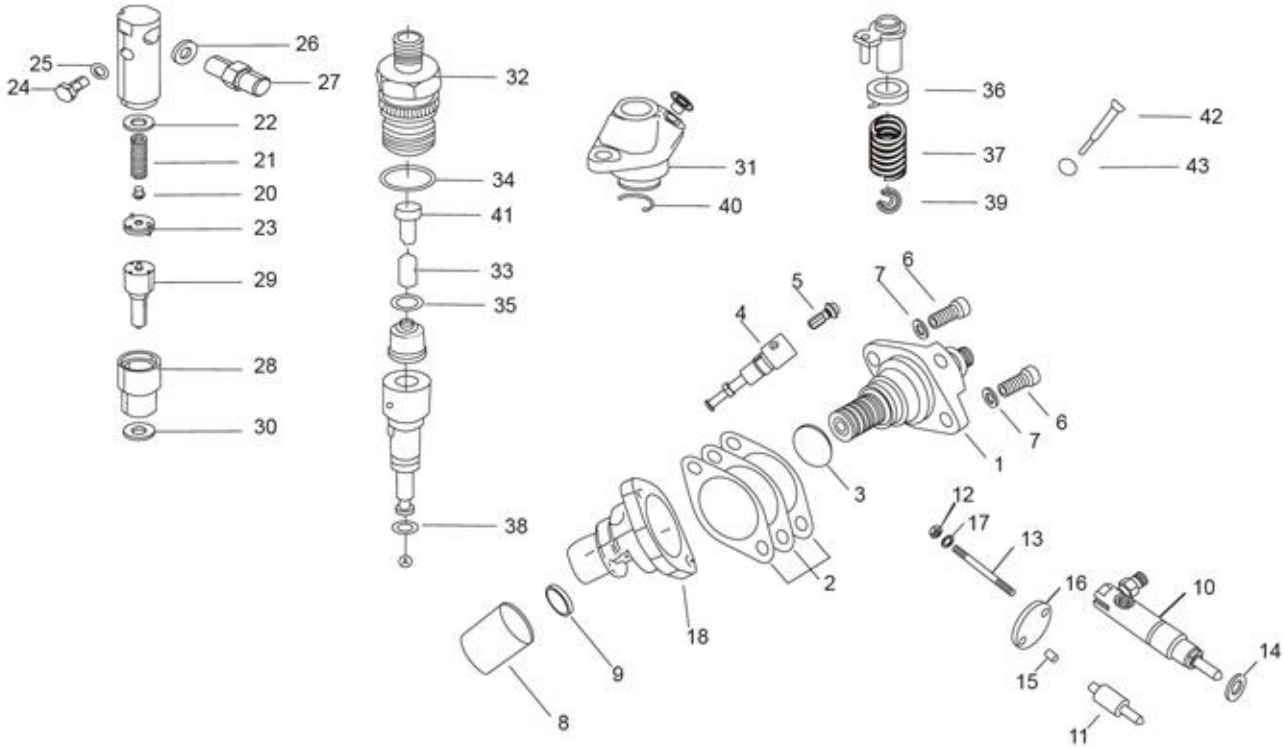
25
24
26
27
22
21
20
23
29
28
30
32
34
41
33
35
38
31
40
36
37
39
42
43
5
7
6
4
7
6
1
3
12
17
13
2
16
10
18
9
15
14
8
11

27

Print Date: 27-Mar-2022

PLATE-9

FUEL INJECTION PUMP AND INJECTOR ASSY

Fig. No.	Part No.	Description	Qty	Remarks
26	E9432030100	WASHER	1	BSIII
27	E9431033395	INLET CONNECTION STUD	1	BSIII
28	E2433314053	NOZZLE CAP NUT	1	BSIII
29	F0020C40562	NOZZLE DSLA154P1306	1	BSII
30	E9431030172	SEALING WASHER	1	BSIII
31	F002F21098	PUMP HOUSING	1	BSIII
32	E9411033342	DELIVERY VALVE HOLDER	1	BSIII
33	E9411034635	COMPRESSION SPRING	1	BSIII
34	E1410210017	O RING	1	BSIII
35	E1410501001	GASKET	1	BSIII
36	E141050100	SPRING PLATE-UPPER	1	BSIII
37	E3414619005	COMPRESSION SPRING	1	BSIII
38	E2916600006	RETAINER	1	BSIII
39	E2410122016	SPRING PLATE – LOWER	1	BSIII
40	E2414601001	RETAINER	1	BSIII
41	F002F5108	FILLER PIECE	1	BSIII
42	ED43340	GUIDING BOLT	1	BSIII
43	ED40642	WASHER (BSII) (N.I.)	1	BSIII

28

Print Date: 27-Mar-2022

PLATE-10

ENGINE COWLING, AIR DUCT, EXHAUST SYSTEM

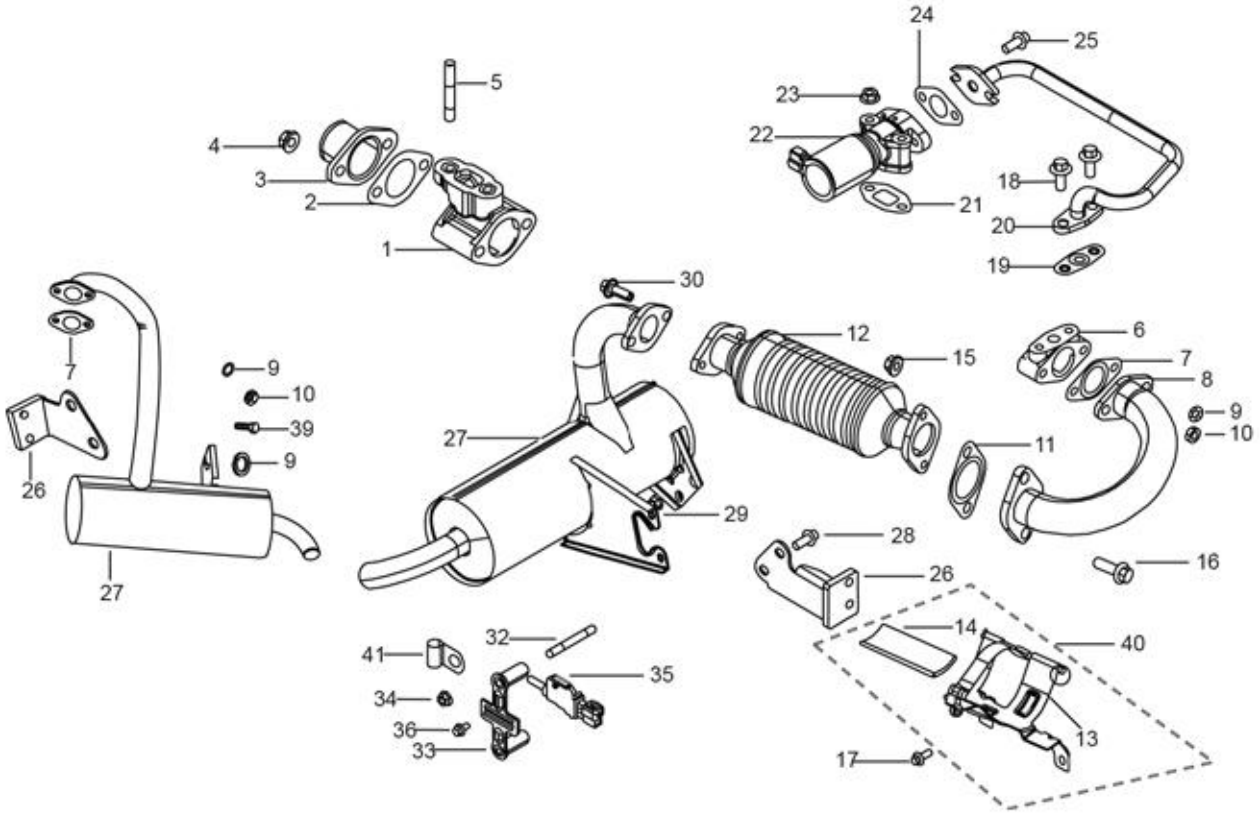
24
25
5
23
22
4
3
2
1
18
21
20
19
30
12
15
6
7
8
9
10
11
7
9
10
39
9
26
27
27
29
28
26
16
14
40
41
32
35
34
36
33
13
17

29

Print Date: 27-Mar-2022

PLATE-10

ENGINE COWLING, AIR DUCT, EXHAUST SYSTEM

Fig. No.	Part No.	Description	Qty	Remarks
1	E43508876	FLANGE INTAKE MACHINED	1	BSIII
2	E500450092	JOINT INTAKE FLANGE AIR INTAKE	2	Common
3	E50018633	FLANGE AIR CLEANER	1	BSIII
4	E07502810	COLLAR NUT M8 X 1.25	2	BSIII
5	E43500578	STUD-M8	2	BSIII
6	E43508875	FLANGE EXHAUST MACHINED	1	BSIII
7	E500450091	JOINT	1	BSII
7	E43526147	JOINT-EXHAUST FLANGE	2	BSIII
8	E43510825	PIPE-EXHAUST(EXHAUST FLANGE TO OXYCAT)	1	BSIII
9	E1756507	SPRING WASHER M8	2	BSIII
10	E50000225	NUT SS	2	BSIII
11	E87026113	GASKET EXHAUST	2	BSIII
12	E43517706	OXYCAT METALIC ASSY. DIA 80 MM	1	BSIII
13	E43518074	BRACKET-OXYCAT ASSEMBLY	1	BSIII
14	E43526171	THERMAL INSULATION 120X50X8	1	BSIII
15	E07502812	COLLAR NUT M10X1.5	4	BSIII
16	E43502821	HEX HEAD FLANGE BOLT M10X1.5X30	2	BSIII
17	E50002805	COLLER BOLT M8 X 1.25 X 22	2	BSIII
18	E07500509	STUD M8X1.25	2	BSIII
19	E43526150	GASKET(EXHAUST MANIFOLD-EGR PIPE)	1	BSIII
20	E43507357	PIPE - EGR (ON-OFF)	1	BSIII
21	E43526149	GASKET INTAKE FLANGE	1	BSIII
22	E43521744	SOLENOID VALVE	1	BSIII
23	E07502810	COLLAR NUT M8 X 1.25	2	BSIII
24	E43526151	GASKET(EGR VALVE-EGR PIPE)	1	BSIII
25	E50002805	COLLER BOLT M8 X 1.25 X 22	2	BSIII
26	ED41100	BRACKET EXHAUST MUFFLER	1	BSII
26	E43520672	BRACKET-MUFFLER (ENGINE SIDE)	1	BSIII
27	E50007715	EXHAUST MUFFLER	1	BSII
27	E43507784	ASSEMBLY MUFFLER	1	BSIII
28	E50002805	COLLER BOLT M8 X 1.25 X 22	2	BSIII
29	E07502810	COLLAR NUT M8 X 1.25	2	BSIII
30	E43502821	HEX HEAD FLANGE BOLT M10X1.5X30	2	BSIII
31	E40018626	AIR FILTER ASSY.	1	BSIII
32	E43521732	STUD M6X1 FOR EGR SWITCH	2	BSIII

30

Print Date: 27-Mar-2022

PLATE-10

ENGINE COWLING, AIR DUCT, EXHAUST SYSTEM

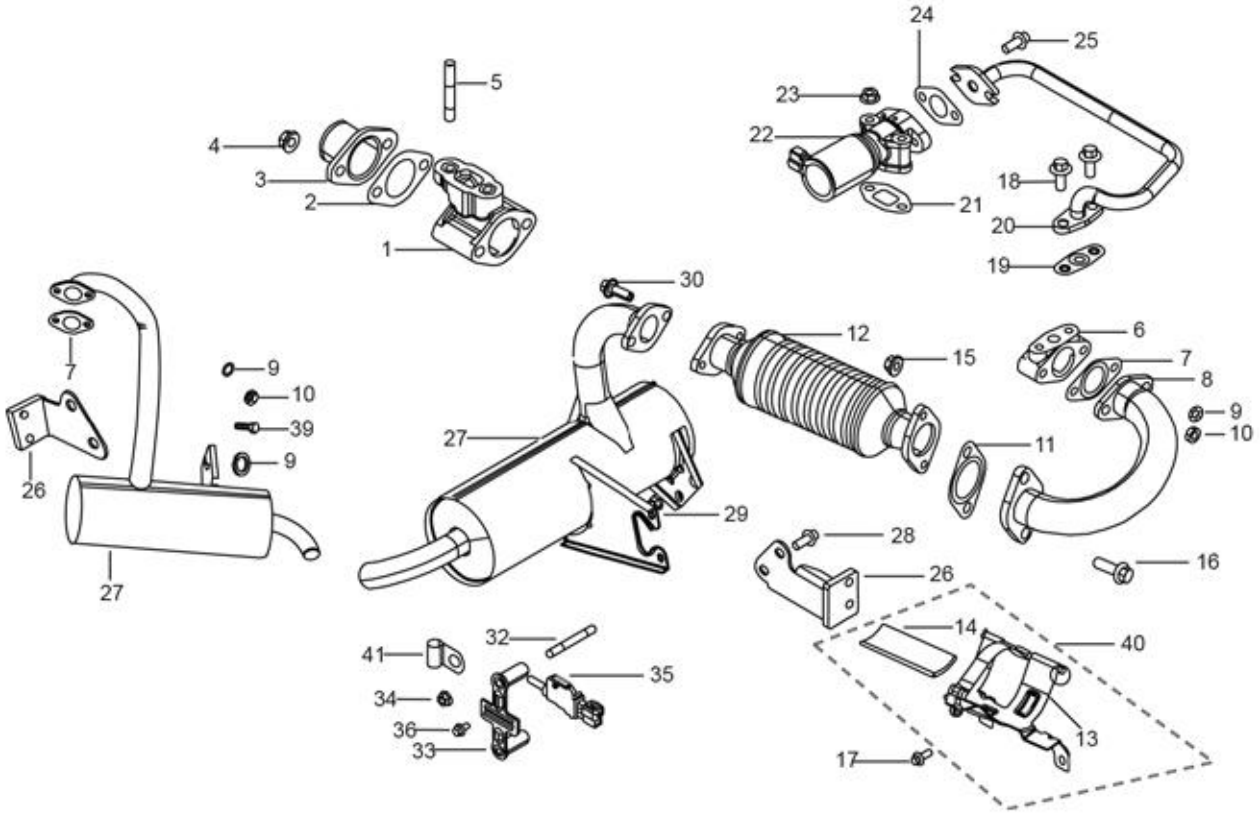
24
25
5
23
22
4
3
2
1
18
21
20
19
30
12
15
6
7
8
9
10
11
7
9
10
39
9
26
27
27
29
28
26
16
14
40
41
32
35
34
36
33
13
17

31

Print Date: 27-Mar-2022

PLATE-10

ENGINE COWLING, AIR DUCT, EXHAUST SYSTEM

Fig. No.	Part No.	Description	Qty	Remarks
33	E43521729	BRACKET ASSY FOR EGR SWITCH	1	BSIII
34	E07502811	COLLAR NUT M6 X 1	2	BSIII
35	E43521753	EGR SWITCH	1	BSIII
36	E43502822	HEX HEAD FLANGE BOLT M5X0.8X10	1	BSIII
37	E43518076	WIRING HARNESS(EGR GREAVES)	1	BSIII
38	E43521778	EGR SWITCH WITH WIRE HARNESS	1	BSIII
39	E11770004	HEX. BOLT M8X1.25X20	2	BSII
40	E43518074	BRACKET-OXYCAT ASSEMBLY	1	BSIII
41	E6193361721	CLAMP	1	BSIII

32

Print Date: 27-Mar-2022

PLATE-11

AIR SHROUD / FLYWHEEL / PULLEY / ELECTRIC START SYSTEM COMPONENTS

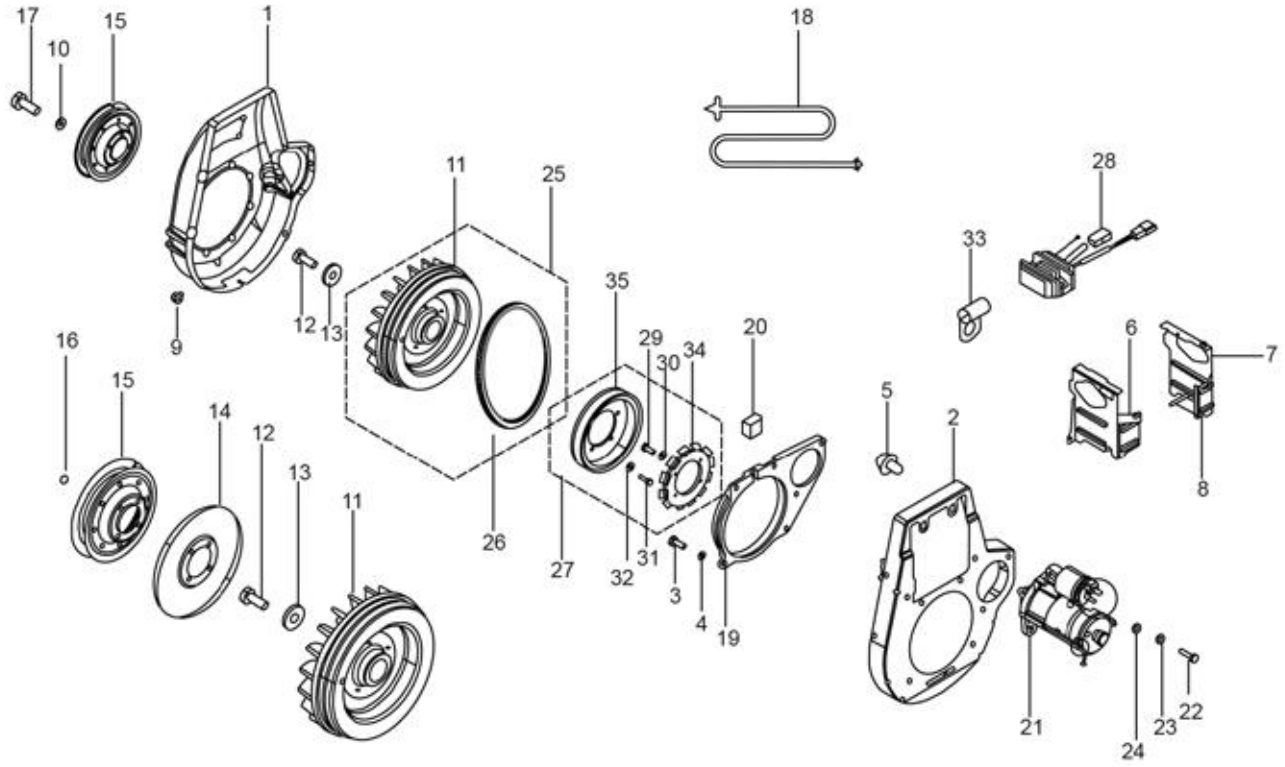
17
10
15
1
18
11
25
28
33
35
12
13
9
29
30
34
20
6
7
16
15
14
12
13
11
5
2
8
26
27
32
31
3
4
19
21
24
23
22

33

Print Date: 27-Mar-2022

PLATE-11

AIR SHROUD / FLYWHEEL / PULLEY / ELECTRIC START SYSTEM COMPONENTS

Fig. No.	Part No.	Description	Qty	Remarks
1	E43531743	AIR SHROUD (BLUE)	1	BSIII
1	E40001765	AIR COWL 0.7 KW	1	BSII
2	E43531725	BACK PLATE	1	BSIII
2	E40001763	BACK PLATE 0.7 KW	1	BSII
3	E9177006	BOLT M8X1.25X25	4	BSIII
3	E202177002	SCREW FOR STARTER PLATE	4	BSII
3	E40000477	SCREW STATOR MOUNTING	4	Common
4	E1756507	SPRING WASHER M8	2	Common
5	E11770004	HEX. BOLT M8X1.25X20	2	BSII
5	E43502817	HEX BOLT FLANGE M8 X 1.25 X 12	2	BSIII
6	E40031733	AIR BAFFLE INTAKE SIDE	1	BSII
6	E40031733	AIR BAFFLE INTAKE SIDE	1	BSIII
7	E40031732	AIR BAFFLE EXHAUST SIDE(BLACK PAINTED) GL-400 II A	1	BSIII
7	E40031732	AIR BAFFLE EXHAUST SIDE(BLACK PAINTED) GL-400 II A	1	BSII
8	E5405725043	SPRING AIR BAFFLE	1	Common
9	E90979037	PHILIPS SCREW	3	Common
10	E40000704	WASHER SPRING	4	Common
11	E40009567	FLYWHEEL WITH RING GEAR 0.7 KW (INEL FMA) DUST PROTECTOR	1	BSII
11	E43509593	FLY WHEEL WITH RING GEAR (CONSISTING OF 5 & 10)	1	BSIII
12	E52200434	SCREW HEX. HEAD M14X1.5X35 LH THREAD FLYWHEEL FIXING	1	Common
13	E97626043	PLAIN WASHER FLYWHEEL	1	Common
14	ED32131	GUARD PLATE	1	BSIII
15	E50007626	STARTING PULLEY (SHEET METAL)	1	Common
16	E260756505	SPRING WASHER (FOR SHEET METAL PULLEY)	4	Common
17	E50000164	BOLT	4	Common
18	E500405518	STARTING ROPE	1	Common
19	E40001773	PLATE STARTER	1	BSIII
20	E40005592	BUSH FOR FMA CABLE	1	BSIII
21	F002G20318	STARTER MOTOR	1	BSII
21	F000CD0301	CDS STARTER MOTOR	1	For BSII-Export & All BSIII Model
22	E47177007	SCREW M8X1.25X30	2	BSIII
23	E1756507	SPRING WASHER M8	2	BSIII
24	E45762512	PLAIN WASHER	2	BSIII
26	E40009648	RING GEAR STARTER 0.7 KW (INEL FMA)	1	Common
27	E40005489	FMA ASSEMBLY	1	BSIII

34

Print Date: 27-Mar-2022

PLATE-11

AIR SHROUD / FLYWHEEL / PULLEY / ELECTRIC START SYSTEM COMPONENTS

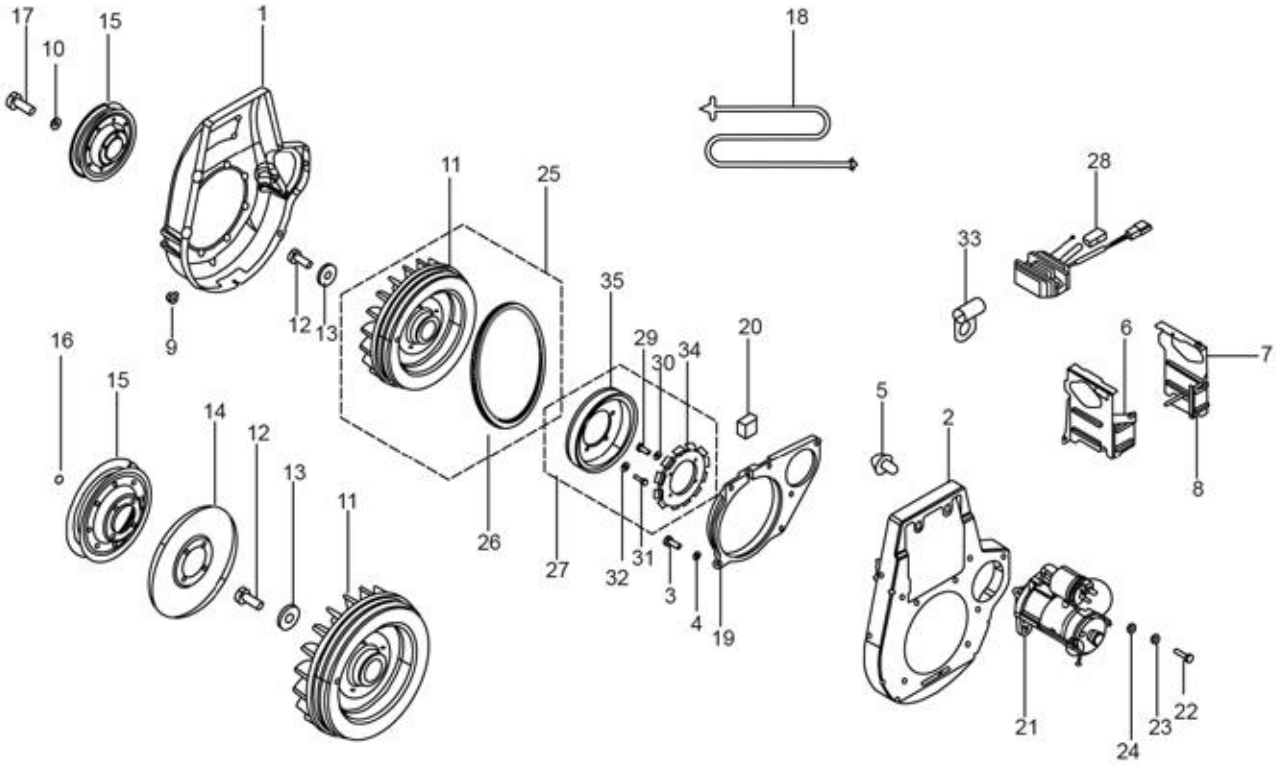
17
10
15
1
18
11
25
28
33
35
12
13
9
29
30
34
20
6
7
16
15
14
12
13
11
5
2
8
26
27
32
31
3
4
19
21
24
23
22

35

Print Date: 27-Mar-2022

PLATE-11

AIR SHROUD / FLYWHEEL / PULLEY / ELECTRIC START SYSTEM COMPONENTS

Fig. No.	Part No.	Description	Qty	Remarks
27	ED11989	FLYWHEEL MOUNTED ALTERNATOR INEL	1	BSII
28	ED33204	REGULATOR	1	BSIII
28	ED22158	REGULATOR GL400	1	BSII
29	E50020128	HEX HEAD SCREW M5X0.8	4	Common
30	E26756503	SPRING WASHER	4	BSII
31	E245176006	BOLT M6X1X20	5	BSIII
31	E270973015	HEX SOCKET HEAD SCREW	5	BSII
32	E1756504	SPRING WASHER M6- OIL SEPARATOR 2	5	BSIII
32	E250755504	SPRING WASHER FOR M6	5	BSII
33	E6193361721	CLAMP	3	Common
34	ED42188	STATOR INEL FMA	1	BSII
35	ED42189	ROTAR INEL FMA	1	BSII
36	587671R	4 ST RELAY SOLENOID	1	Common
37	E2922833073	SPACER	1	BSII
37	ED42246	SPACER FR PULLEY	1	BSIII
38	E50000405	SCREW	1	BSII
39	E40000565	STUD FOR PULLEY	4	BSIII
40	E1324010	NUT	4	BSII

36

Print Date: 27-Mar-2022

PLATE-12
AIR FILTER ASSEMBLY

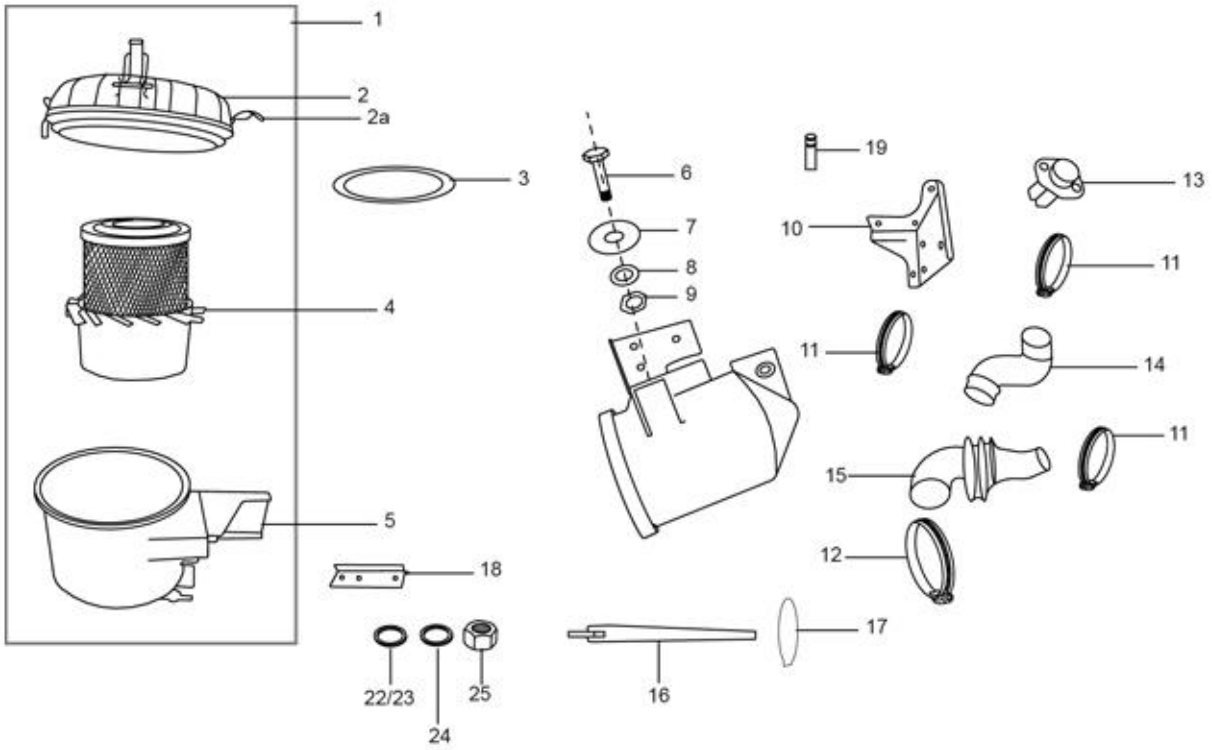
1
2
2a
3
4
5
6
7
8
9
10
11
11
11
12
13
14
15
16
17
18
19
22/23
24
25

37

Print Date: 27-Mar-2022

PLATE-12

AIR FILTER ASSEMBLY

Fig. No.	Part No.	Description	Qty	Remarks
1	E40018625	AIR FILTER ASSYPLASTIC MODIFIED SEALING	1	Common
1	E40018626	AIR FILTER ASSY.	1	Common
2	632425	COVER ENGINETECH AIR FILTER	1	BSII
2	920086	FILTER COVER	1	BSIII
2A	920088	CLAMP	1	Common
3	632427	O RING	1	BSII
3	920105	SPONGE GASKET O RING)	1	BSIII
4	632428	FILTER ELEMENT ASSLY (ENGINETECH AIR FI	1	BSII
4	920102	ELEMENT FOR AIR CLEANER	1	BSIII
5	920085	FILTER HOUSING	1	BSIII
6	031090	HEXAGONAL SCREW	3	BSIII
7	604973	PLAIN WASHER M6	3	Common
8	016406	SPRING WASHER	3	Common
9	20106	HEX NUT M6	3	Common
10	604750	BRACKET FOR ENGINETECH FILTER	1	Common
11	604553	WORM CLIP	3	Common
12	604756	HOSE CLIP	1	BSIII
13	611621	PLASTIC FLANGE ENGINETECH (N.I.)	1	BSIII
14	611620	HOSE FOR FLANGE ENGINETECH	1	Common
15	B006581	HOSE ENGINE	1	Common
16	B009290	STRAP ASSY.	1	Common
16	B009290	STRAP ASSY.	1	BSIII
17	632413	RUBBER PACKING (N.I.)	1	Common
18	632412	BKT. STRAP HOLDING	1	BSIII
19	632426	DUST VALVE (ENGINETECH)	1	BSII
19	920087	DUST VALUE	1	BSIII
20	230560	SPACER	3	Common
21	569041	KNOB ASSLY (ENGINETECH AIR FILTER)	1	BSII
22	3056	PLAIN WASHER M6 OD12	2	Common
23	013880	PLAIN WASHER	2	Common
24	016406	SPRING WASHER	4	Common
25	20106	HEX NUT M6	4	Common
26	79375	RUBBER BUMPER	3	Common

38

Print Date: 27-Mar-2022

PLATE-13

ENGINE SIDE COVER AND MAIN HOUSING

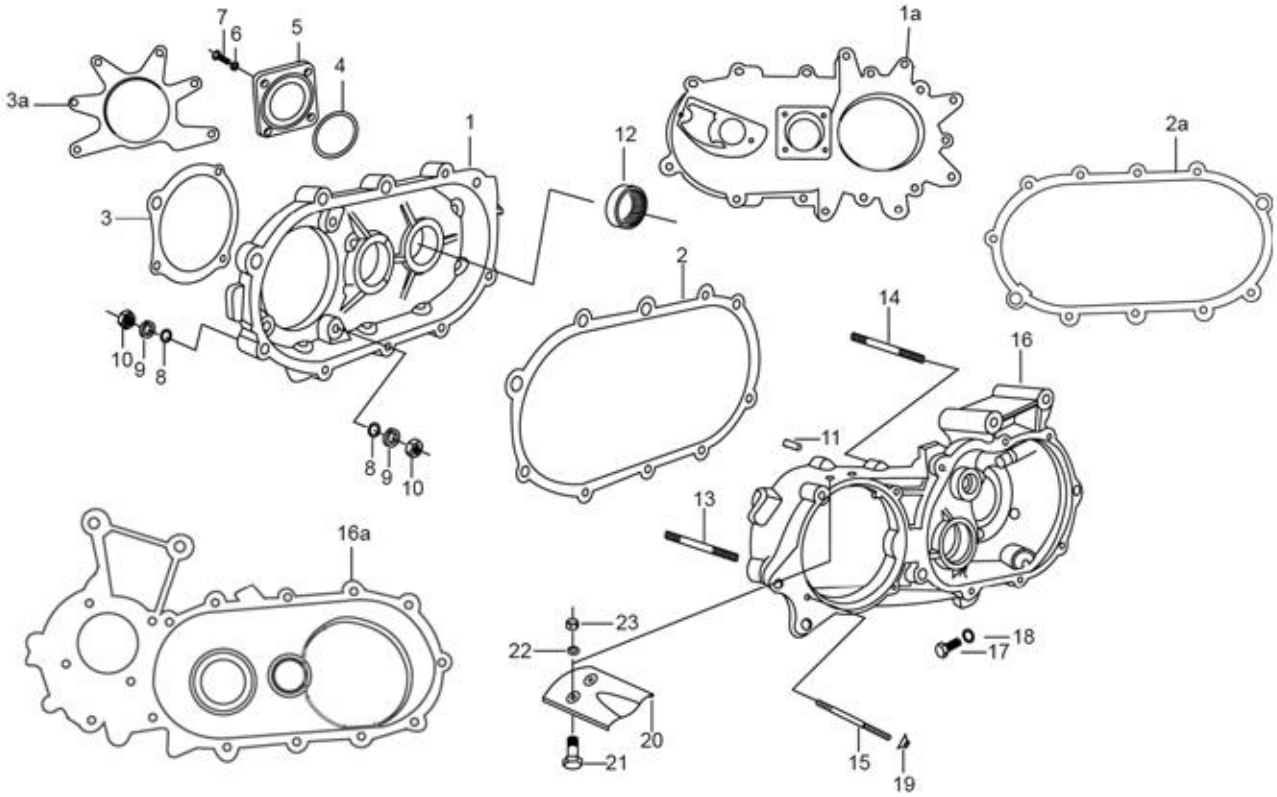
7
6
5
4
3a
1
1a
12
2a
3
2
14
16
10
9
8
11
8
9
10
13
16a
23
22
18
17
20
21
15
19

39

Print Date: 27-Mar-2022

PLATE-13

ENGINE SIDE COVER AND MAIN HOUSING

Fig. No.	Part No.	Description	Qty	Remarks
1	127171011	ENGINE SIDE COVER (INT.MTG.)	1	
1A	127171310	ENGINE SIDE COVER (EXT.MTG)	1	
2	128071012	GASKET ENGINE SIDE COVER (10 STUD)	1	
2A	B001844	GASKET ENGINE SIDE COVER	1	
3	129001014	GASKET ENGINE PTO FACE (4 STUD)	1	
3A	B001501	GASKET PTO COVER & ENGINE SIDE COVER	1	
4	825420215	O RING - COVER PLATE	1	
5	520221019R	COVER PLATE (E/SIDE COVER)	1	
6	807000647	CONICAL LOCK WASHER M6	4	Not Applicable
7	812061656	CSK PHILIPS HEAD SCREW M6 X 16	4	
8	808000826	PLAIN WASHER M8	11	
8	808000826	PLAIN WASHER M8	10	
9	016408	SPRING WASHER	11	
9	016408	SPRING WASHER	10	
10	15335	HEX HD NUT M8	11	
10	15335	HEX HD NUT M8	10	
11	127102010	HOLLOW DOWEL (G. BOX ESC)	2	
12	120212012	NEEDLE BUSH	1	
13	B042798	FLANGED HEXAGONAL HEAD SCREW M8X45	8	
14	B042799	FLANGED HEXAGONAL HEAD SCREW M8X40	8	
15	815064025	STUD M6 X 40	4	
16	127101016	MAIN HSG.	1	
16	127109018	MAIN HOUSING	1	
16A	1A010094	MAIN HOUSING	1	Old
16A	1A016604	MAIN HOUSING	1	New aluminiun clutch
17	811081025	HEX HEAD SCREW M8 X 10 (DRAIN PLUG)	1	
18	120271018	FIBER WASHER DRAIN PLUG	1	
19	659842	NUT WITH CONICAL WASHER M8 X 1.25P	6	
20	127911019	OIL DEFLECTOR CLUTCH	1	
21	567741	HEX HEAD SCREW M5 X 18 (811051824)	2	
22	127912013	FIBER WASHER OIL DEFLECTOR	2	
23	12136	NUT / NYLOCK NUT M5	2	
24	B002320	GEAR BOX EXT(W/O CLUTCH ASSLY) PASSENGER	1	NI

40

Print Date: 27-Mar-2022

PLATE-14

MAINSHAFT, SPEED GEARS AND CLUSTER GEAR

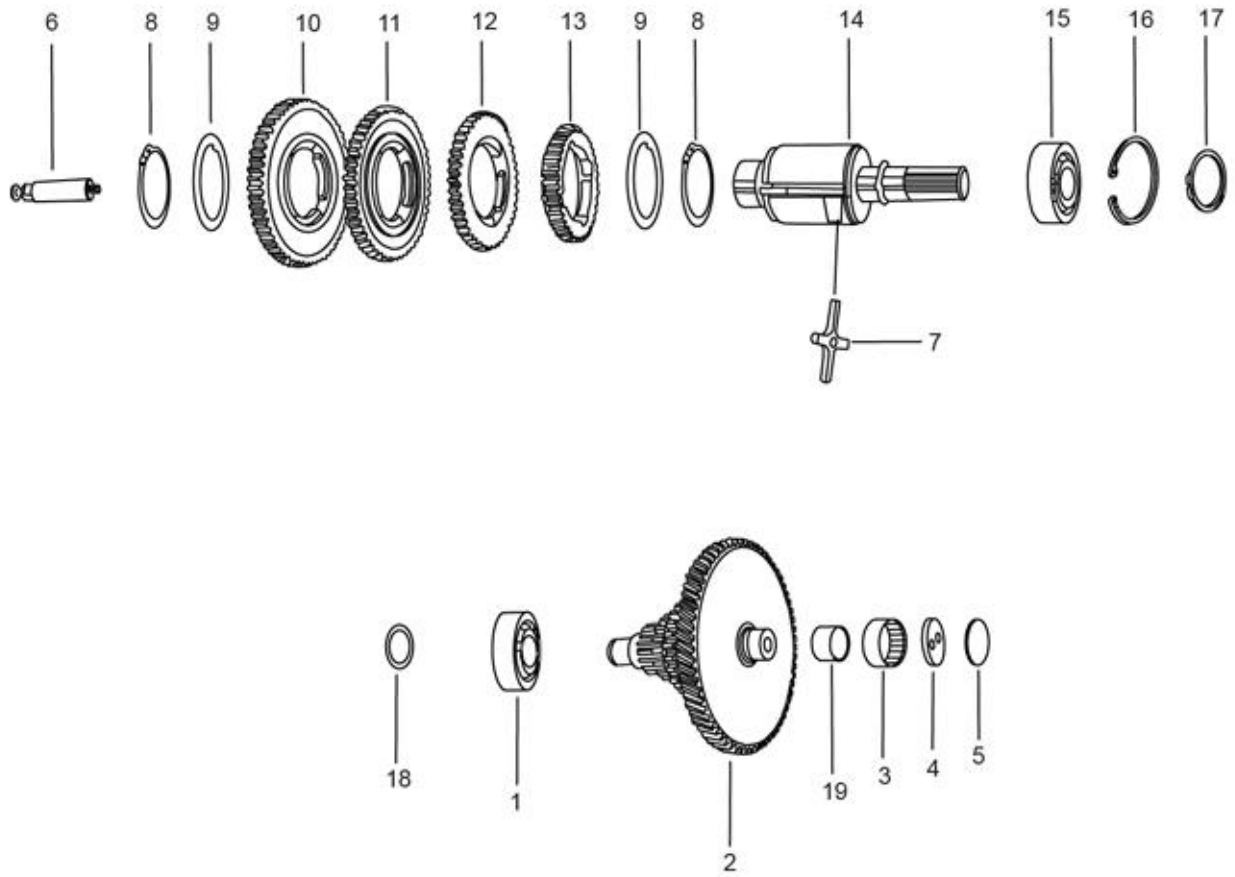
6
8
9
10
11
12
13
9
8
14
15
16
17
7
18
1
2
19
3
4
5

41

Print Date: 27-Mar-2022

PLATE-14

MAINSHAFT, SPEED GEARS AND CLUSTER GEAR

Fig. No.	Part No.	Description	Qty	Remarks
1	30209R	BALL BEARING FRONT WHEEL HUB	1	
2	127203010R	CLUSTER GEAR	1	
3	884222808	NEEDLE BUSH 22X28X12	1	
4	120204015R	WASHER (ALT)	1	
5	120205019	SHIM HARD BUSH	1	
6	523021018	STEM GEAR OPERATING	1	
7	B003924	CROSS	1	
8	842004808	CIRCLIP DIA.48 (EXT)	2	
9	523011013R	SHOULDER RING	1	AR
9	523012017	SHOULDER RING 1.7 MM THK	1	AR
9	523014015	SHOULDER RING 2.0MM THK	1	AR
10	127309515R	SPEED GEAR 1ST	1	
11	127302517R	SPEED GEAR 2ND	1	
12	127303016R	SPEED GEAR 3RD	1	
13	127306513R	SPEED GEAR 4TH	1	
14	127451019R	MAIN SHAFT	1	
15	880255211R	DEEP GROOVE BALL BEARING 25X52X15	1	
16	841005207	CIRCLIP DIA 52 (INT)	1	
17	842002501	CIRCLIP DIA 25 (EXT)	1	
18	842001507	CIRCLIP DIA 15 (EXT)	1	
19	122032014	INNER RING - CLUSTER GEAR	1	

42

Print Date: 27-Mar-2022

PLATE-15

GEAR SHIFTER AND ITS CONTROL MECHANISM

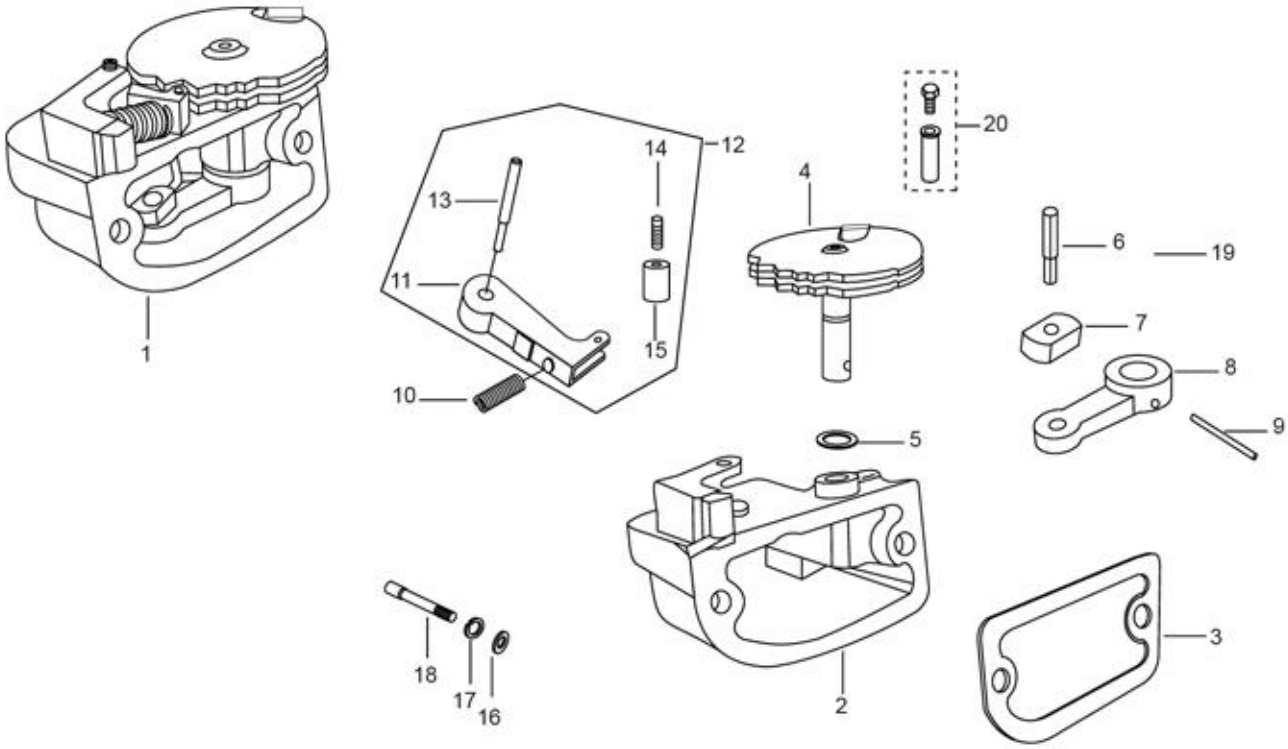
1
2
3
4
5
6
7
8
9
10
11
12
13
14
15
16
17
18
19
20

43

Print Date: 27-Mar-2022

PLATE-15

GEAR SHIFTER AND ITS CONTROL MECHANISM

Fig. No.	Part No.	Description	Qty	Remarks
1	127640012	COMPLETE GEAR SHIFTER HSG ASSLY	1	
2	127641016	GEAR SHIFTER HOUSING	1	
3	128081017	GASKET HOUSING GEAR SHIFTER HOUSING	1	
4	SPB042620	SECTOR AND CONNECTOR PLATE AND LEVER ASSLY.	1	
5	825080209	O - RING - (SECTOR PLATE ASSY.)	1	
6	126022017	PIN FOR SLIDER BLOCK	1	
7	126021013	SLIDER BLOCK	1	
8	SPB042620	SECTOR AND CONNECTOR PLATE AND LEVER ASSLY.	1	
9	126004015	TAPER PIN (FOR LEVER)	1	
10	126003011	SPRING GEAR SHIFTER ASSY.	1	
11	126060019	BRACKET ASSY.	1	
12	SP126050014	BKT. WITH ROLLER ASSLY - SPD	1	
13	126054010	SCREW FOR BRACKET	1	
14	126053016	PIN FOR ROLLER	1	
15	126052012	ROLLER	1	
16	3056	PLAIN WASHER M6 OD12	2	
17	016406	SPRING WASHER	2	
18	B016611	FLANGED HEX. HEAD SCREW M6X45 CL10	2	
19	SPB042620	SECTOR AND CONNECTOR PLATE AND LEVER ASSLY.	1	
20	604560	SCREW TERMINAL ASSY. - GEAR CONTROL	2	

44

Print Date: 27-Mar-2022

PLATE-16

DIFFERENTIAL UNIT, FARE METER HOUSING AND SPEEDO DRIVE

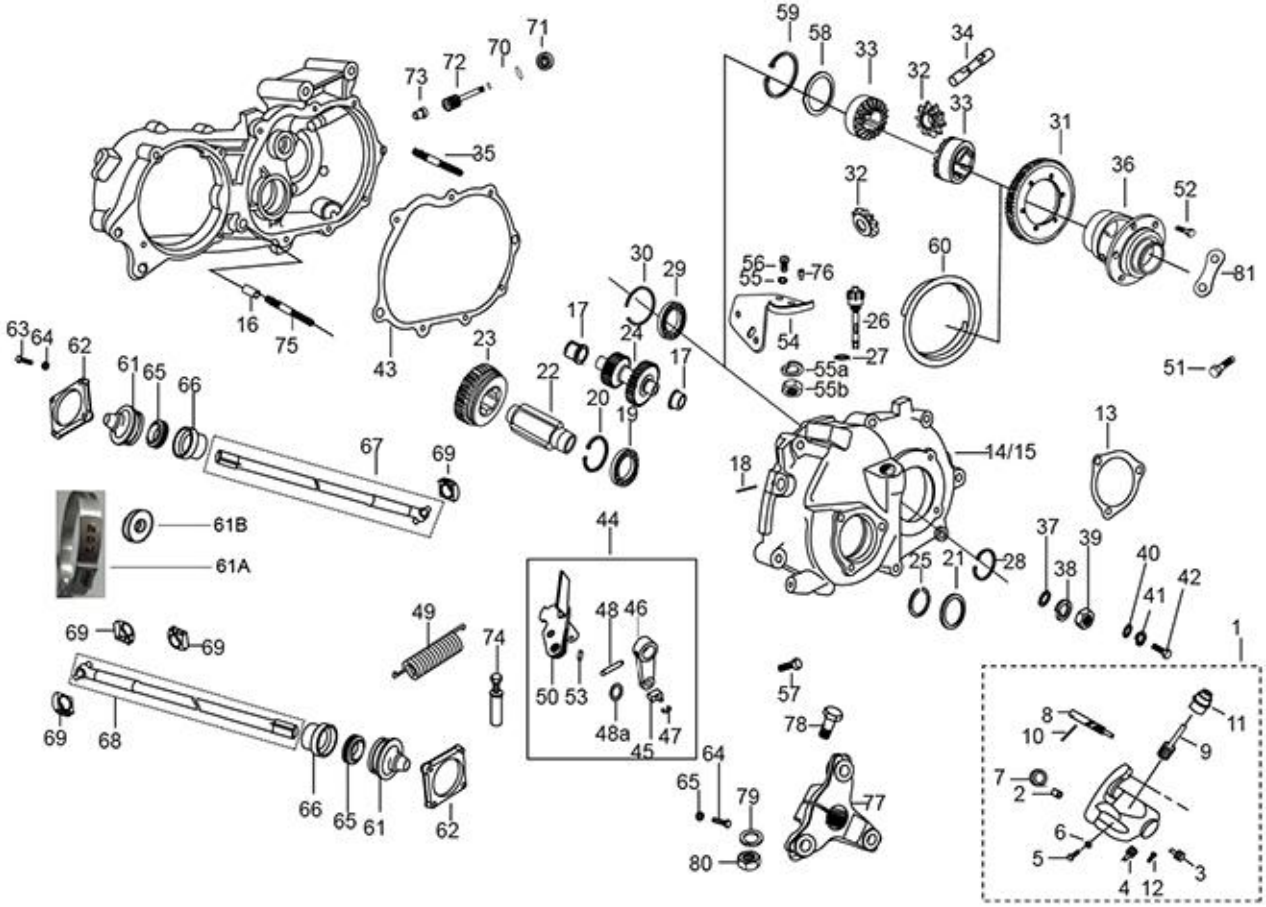
59
58
33
34
32
33
31
36
52
81
71
70
72
73
35
32
60
30
29
56
55
76
26
27
54
55a
55b
51
16
75
43
23
22
17
24
17
20
19
63
64
62
61
65
66
67
69
14/15
13
18
61B
61A
44
37
39
40
42
41
38
25
21
28
49
74
48
46
50
53
48a
47
45
69
69
69
68
57
78
1
8
10
11
9
7
2
6
5
4
12
3
66
65
61
62
64
65
79
77
80

45

Print Date: 27-Mar-2022

PLATE-16

DIFFERENTIAL UNIT, FARE METER HOUSING AND SPEEDO DRIVE

Fig. No.	Part No.	Description	Qty	Remarks
1	1A000817	FAREMETER	1	
2	124112014	BUSH(10951)	1	
3	125012015	PLUG F.M.HOUSING (40734)	1	
4	165121014	PIN	1	
5	811051525	SCREW (HEX HEAD M5 X 15)	1	
6	20105	PLAIN NUT M5	1	
7	B018991	PLUG FOR FAREMETER	1	
8	124121015	FARE METER PINION	1	
9	124102019	FARE METER GEAR	1	
10	822031942	SPRING PIN 3 X 19	1	
11	124141015R	ADOPTER NYLON (VE)	1	
12	124113018	GREASE NIPPLE (M6)	1	
13	1A000826	GASKET	1	
14	127121016	GEAR BOX COVER	1	
15	BS4 1A010093	GEAR BOX COVER_BS4	1	
16	120203011	HOLLOW DOWEL - GEAR BOX COVER	2	
17	B042486	BUSH	2	
18	822051647	SPRING PIN 5X16	1	
19	880305509R	DEEP GROOVE BALL BEARING 30X55X13	1	
20	841005207	CIRCLIP DIA 52 (INT)	1	
20	841005506	CIRCLIP DIA. 55 (INT)	1	
21	888472578	OIL SEAL GEAR BOX	1	
21	1A000236	OIL SEAL	1	
22	127501010	SHAFT PINION	1	
22	1A009926	REVERSE SHAFT	1	
23	127404016R	GEAR R.C.	1	
24	127571015R	IDLER GEAR (PAS)	1	
25	842002501	CIRCLIP DIA 25 (EXT)	1	
25	842003000	CIRCLIP DIA. 30 (EXT.)	1	
26	112898	OIL LEVEL ARM WITH PLUG	1	Old
26	1A014592	OIL DIPSTICK	1	New aluminiun clutch
27	127016015	DIPSTICK SEALING WASHER	1	
28	6450	EXT CIRCLIP DIA 48	1	
29	7066R	RADIAL BALL BEARING	1	
30	111353	CIRCLIP	1	

46

Print Date: 27-Mar-2022

PLATE-16

DIFFERENTIAL UNIT, FARE METER HOUSING AND SPEEDO DRIVE

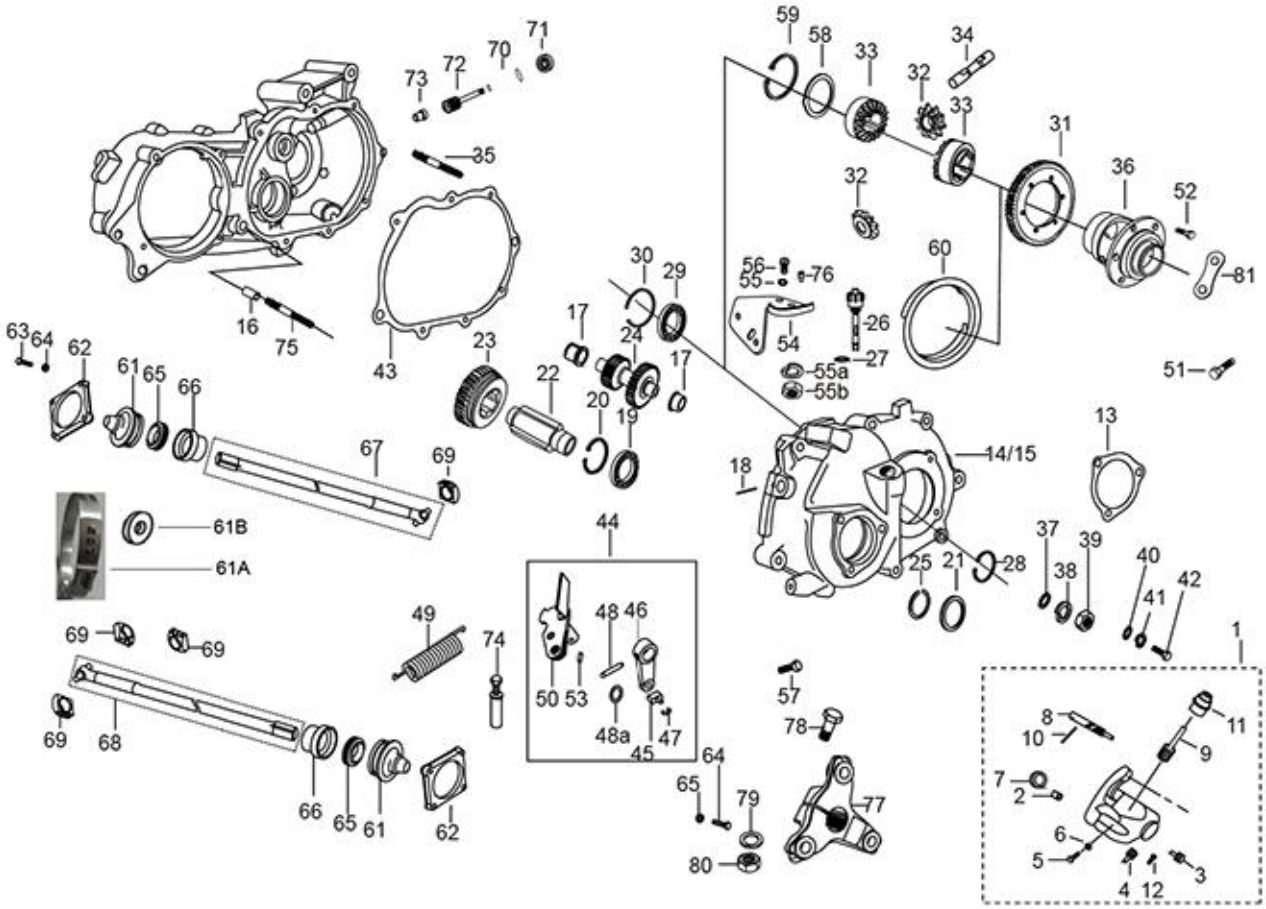
59
58
33
34
32
33
31
36
52
81
71
70
72
73
35
32
60
30
29
56
55
76
26
27
54
55a
55b
51
16
75
43
23
22
17
24
17
20
19
63
64
62
61
65
66
67
69
18
14/15
13
61B
61A
44
37
39
40
42
41
38
25
21
28
49
74
48
46
50
53
48a
47
45
69
69
69
68
57
78
8
10
11
9
7
2
6
5
4
12
3
1
66
65
61
62
64
65
79
77
80

47

Print Date: 27-Mar-2022

PLATE-16

DIFFERENTIAL UNIT, FARE METER HOUSING AND SPEEDO DRIVE

Fig. No.	Part No.	Description	Qty	Remarks
31	127555016	GEAR FINAL DRIVE (PASS)	1	
31	1A011810	DIFFERENTIAL CROWN (PASS.)	1	Applicable 15th Mar-19 onwards
32	NS-	NOT SERVICEABLE PART	2	Serviceable as Kit - 940028
33	NS-	NOT SERVICEABLE PART	2	Serviceable as Kit - 940028
34	132129	PIN	1	
35	B042798	FLANGED HEXAGONAL HEAD SCREW M8X45	8	
36	288730	DIFFERENTIAL CAGE	1	
37	808000826	PLAIN WASHER M8	8	
37	808000826	PLAIN WASHER M8	10	
38	016408	SPRING WASHER	8	
38	016408	SPRING WASHER	10	
39	20108	HEX NUT M8	8	
39	15335	HEX HD NUT M8	10	
39	20108	HEX NUT M8	8	
40	3056	PLAIN WASHER M6 OD12	3	
41	016406	SPRING WASHER	3	
42	31088	HEX HD SCREW M6 X 16 CL 8.8 (811061623)	3	
43	127141016	GASKET G. B. COVER	1	
44	SP1A0101404	INVERTER LEVER SECTOR ASSY PASS -SPD	1	
45	120321019	SLIDER BLOCK R.C. GEAR	1	
46	SP1A0101404	INVERTER LEVER SECTOR ASSY PASS -SPD	1	
47	843000500	CIRCLIP DIA.5 (EXT) TYPE C	1	
47	843000500	CIRCLIP DIA.5 (EXT) TYPE C	1	
48	17702	SPRING PIN	1	
48A	1A005176	O- RING	1	
49	127111011	REVERSE GEAR SPRING	1	
50	1A010139	SECTOR PLATE ASSLY COMP	1	For Old Gear Box Cover
51	1A004807	SCREW	3	
52	1A004807	SCREW	6	
53	825080209	O - RING - (SECTOR PLATE ASSY.)	1	
54	128306015	STOPPER PLATE R.C. LEVER	1	
55	016404	SPRING WASHER M4	2	
55A	003054	PLAIN WASHER	2	
55B	20104	HEX NUT M4	2	
56	31088	HEX HD SCREW M6 X 16 CL 8.8 (811061623)	2	

48

Print Date: 27-Mar-2022

PLATE-16

DIFFERENTIAL UNIT, FARE METER HOUSING AND SPEEDO DRIVE

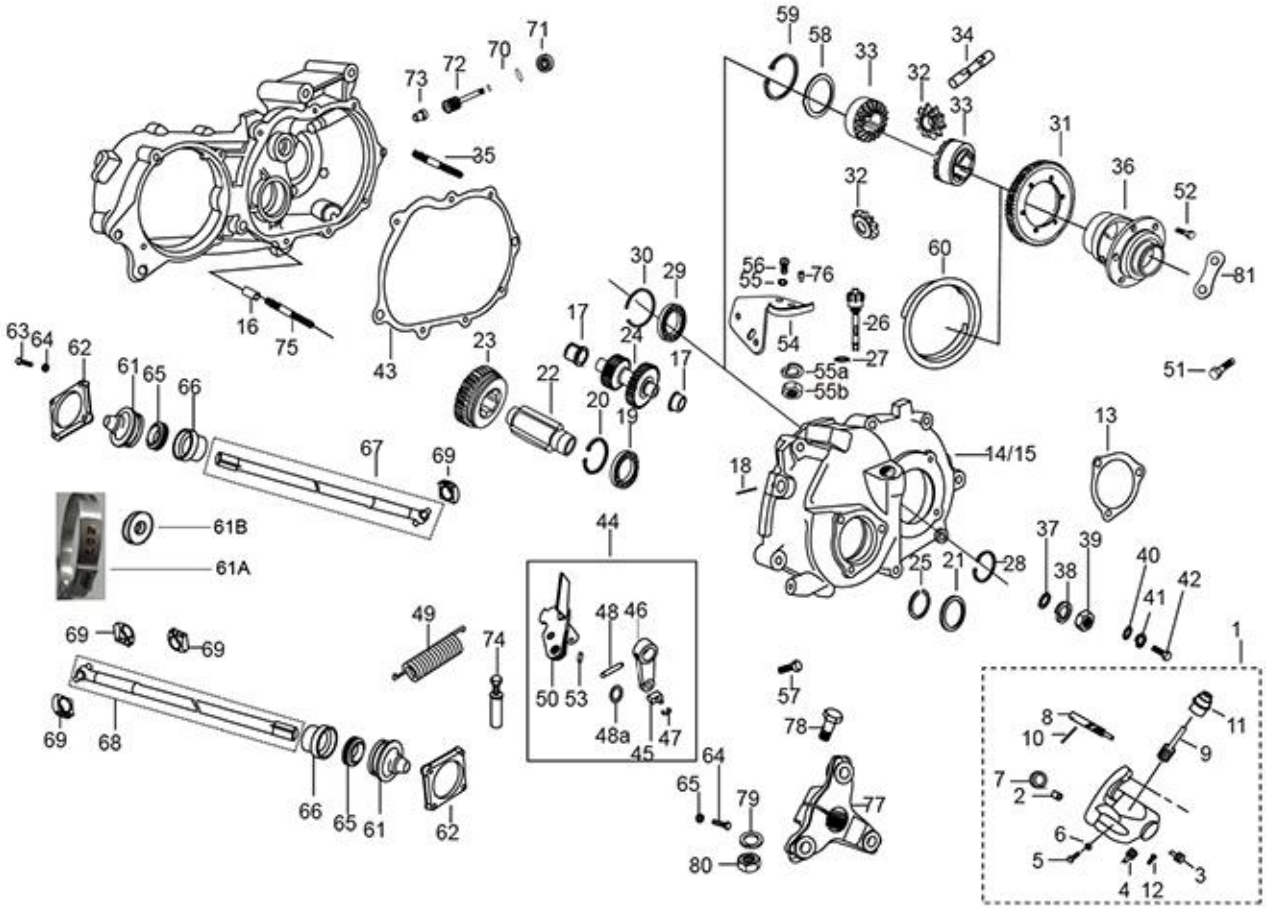
59
58
33
34
32
33
31
36
52
81
71
70
72
73
35
32
60
30
29
56
55
76
26
27
54
55a
55b
51
16
75
43
23
22
17
24
17
20
19
63
64
62
61
65
66
67
69
14/15
13
18
61B
61A
44
37
39
40
42
41
38
25
21
28
49
74
48
46
50
53
48a
47
45
69
69
69
68
57
78
1
8
10
11
9
7
2
6
5
4
12
3
66
65
61
62
64
65
79
77
80

49

Print Date: 27-Mar-2022

PLATE-16

DIFFERENTIAL UNIT, FARE METER HOUSING AND SPEEDO DRIVE

Fig. No.	Part No.	Description	Qty	Remarks
57	128307019	BOLT R.C. SPRING RETAINING	1	
58	220575	WASHER 65X3	1	
59	132134	CIRCLIP	1	
60	132244	STOPPER THK=1.0	1	
61	6C000016	BELLOW	2	Chassis cut off MBX0003BFXE848267
60	1A011778	SATELLITE PIN RETAINER	1	Applicable 15th Mar-19 onwards
60A	1A000612	RETAINER SCREW - PRE COATED	2	Applicable 15th Mar-19 onwards
61A	6C000041	OTIKAR CLAMP FOR BELLOW	2	Chassis cut off MBX0003BFXE848267
61B	3056	PLAIN WASHER M6 OD12	6	Chassis cut off MBX0003BFXE848267
62	111356	COVER	2	
63	31092	HEX. HD SCREW M6X25	8	
64	016406	SPRING WASHER	8	
65	6C000312R	SEAL RING	2	Chassis cut off MBX0003BFXE848267
66	113278	BRACKET RETAINER RING (41736)	2	
67	587687	PROP. SHAFT SUB ASSY. LT (WITH PIN)	1	
68	587685	PROP. SHAFT SUB ASSY. RT (WITH PIN)	1	
69	112867R	SLIDER BLOCK PROP. SHAFT	4	
70	117401	BUSH	1	
71	117402	OIL SEAL	1	
72	117404	SPEEDOMETER GEAR	1	
73	165121014	PIN	1	
74	604560	SCREW TERMINAL ASSY. - GEAR CONTROL	1	
75	127103014	M8 STUD - MAIN HOUSING	2	
76	119278	TERMINAL	1	
77	111498	ELASTIC HUB	1	
78	B024614	HEX HEAD BOLT M10X45 CL 10.9	2	
79	16410	SPRING WASHER	2	
80	231370	SELF BREAKING NUT M10	2	
81	B003155	LOCK PLATE	3	

50

Print Date: 27-Mar-2022

PLATE-17
CLUTCH AND CLUTCH COVER

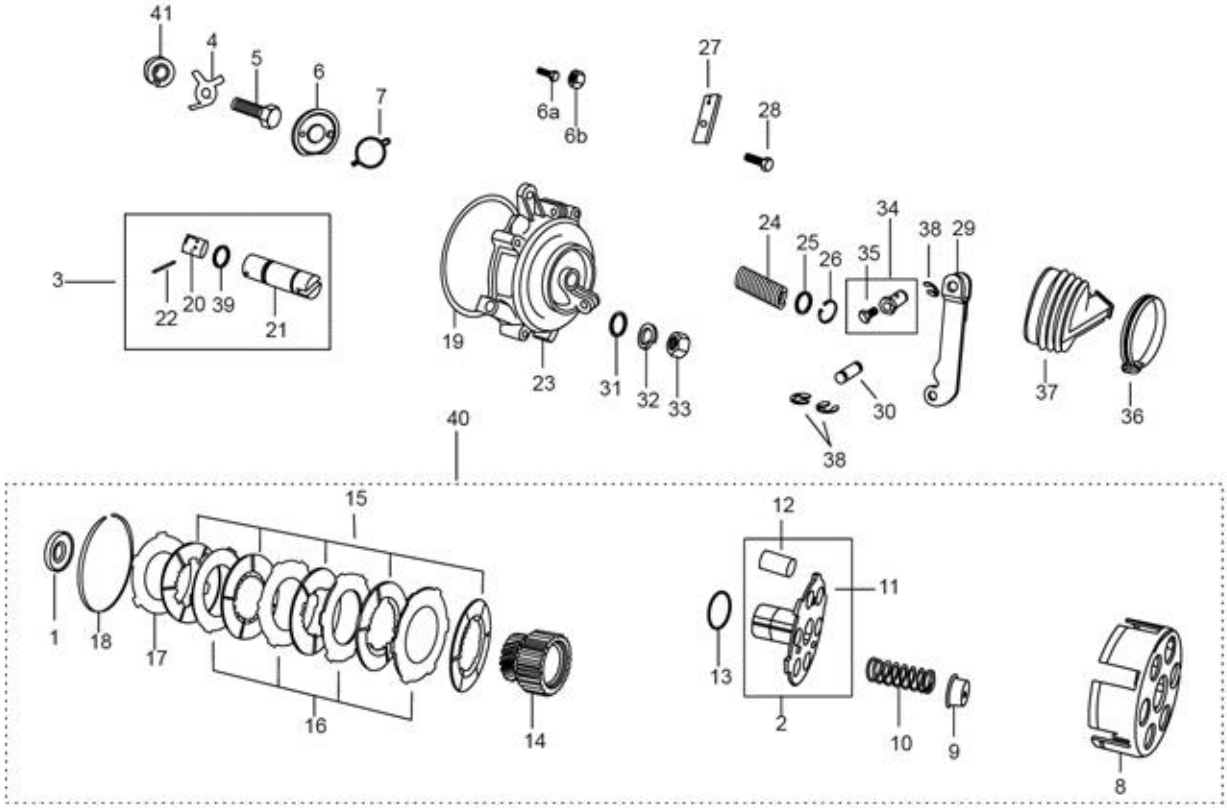
41
4
5
6
7
6a
6b
27
28
3
22
20
39
21
19
23
31
32
33
24
25
26
35
34
38
29
30
38
37
36
40
15
1
18
17
16
14
12
11
13
2
10
9
8

51

Print Date: 27-Mar-2022

PLATE-17

CLUTCH AND CLUTCH COVER

Fig. No.	Part No.	Description	Qty	Remarks
1	652124	SPACER WASHER-CLUTCH	1	
2	127740018	CLUTCH SHAFT ASSLY (IMPROVED)	1	
3	127290013	PLUNGER SHAFT ASSY.	1	
4	129012013	TAB WASHER	1	
5	E47177007	SCREW M8X1.25X30	1	
6	129019011R	THRUST PLATE(SINTERED)	1	
6A	567741	HEX HEAD SCREW M5 X 18 (811051824)	4	
6B	20106	HEX NUT M6	4	
7	129015015	SPRING CLIP	1	
8	127753015	CLUTCH BOX	1	
8	127691011	CLUTCH BOX	1	
9	127757011	CUP - CLUTCH SPRING	6	
10	127755013	SPRING CLUTCH	6	
11	652112	CLUTCH SHAFT -	1	
12	127741012	BUSH SINTERED -	1	
13	127758015	SHIM	1	
14	127759019R	ENGINE GEAR	1	
15	127530011	DRIVEN PLATE ASLY	5	
16	127692015	DRIVING PLATE THK. 2.0 MM	4	
17	127693019	PRESSURE PLATE OUTER (VE)	1	
18	127754019	CIRCLIP - CLUTCH BOX	1	
19	825123207	O - RING CLUTCH COVER	1	
20	120159014	PLUNGER	1	
21	127182010	PLUNGER SHAFT -	1	
22	822031942	SPRING PIN 3 X 19	1	
23	1A011662	CLUTCH COVER	1	
24	127185012	SPRING - CLUTCH COVER	1	
25	120164019	RETAINING PLATE	1	
26	842001600	CIRCLIP DIA.16(EXT)	1	
27	127471019	BRACKET CLUTCH CABLE GUIDE	1	
28	31092	HEX. HD SCREW M6X25	1	
29	127460010	LINK ASSLY - CLUTCH (IMPROVED)	1	
30	127013013	PIN CLUTCH	1	
31	3056	PLAIN WASHER M6 OD12	4	
32	016406	SPRING WASHER	4	

52

Print Date: 27-Mar-2022

PLATE-17
CLUTCH AND CLUTCH COVER

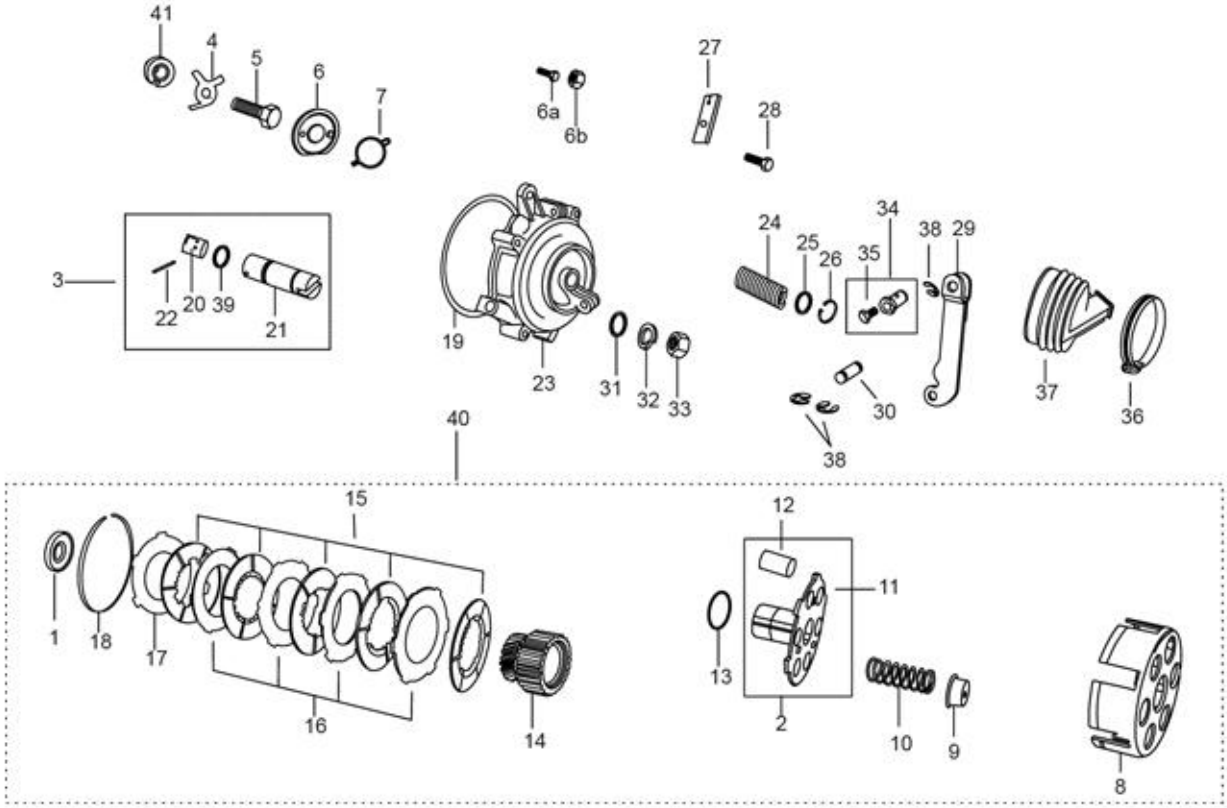
41
4
5
6
7
6a
6b
27
28
3
22
20
39
21
19
23
31
32
33
24
25
26
35
34
38
29
30
38
37
36
40
15
1
18
17
16
14
12
11
13
2
10
9
8

53

Print Date: 27-Mar-2022

PLATE-17

CLUTCH AND CLUTCH COVER

Fig. No.	Part No.	Description	Qty	Remarks
33	20106	HEX NUT M6	4	
34	B024379	SCREW TERMINAL ASSLY-ENGINE STOP,D.C.	1	
35	120238016	BOLT FOR SCREW TERMINAL	1	
36	120170018	HOSE CLIP - CLUTCH COVER BELOW	1	
37	127012019	BELLOW CLUTCH ACTUATING	1	
38	843000809	CIRCLIP DIA.8(EXT) TYPE C	3	
39	B019220	O- RING (PLUNGER SHAFT)	1	
40	127730013SP	CLUTCH ASSLY COMP.(IMPROVED)	1	
41	129011019	WASHER FOR CLUTCH ASSY.	1	

54

Print Date: 27-Mar-2022

PLATE-18
ENGINE SUPPORT

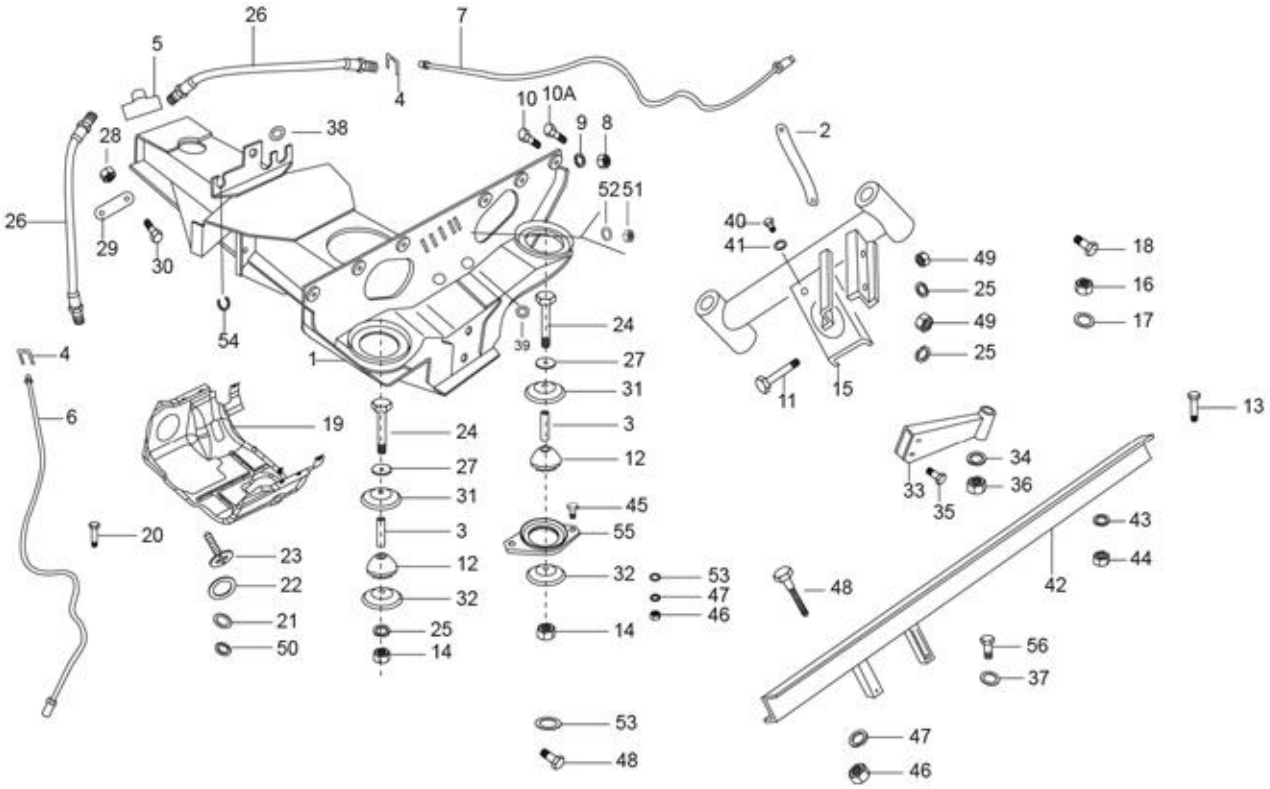
26
7
5
4
10
10A
9
8
38
2
28
52
51
26
29
30
40
41
49
25
49
25
18
16
17
54
39
24
27
31
3
12
45
55
32
53
47
46
14
1
4
6
19
24
27
31
3
12
32
25
14
11
15
13
34
36
33
35
43
44
42
20
23
22
21
50
48
56
37
53
48
47
46

55

Print Date: 27-Mar-2022

PLATE-18
ENGINE SUPPORT

Fig. No.	Part No.	Description	Qty	Remarks
1	6C000382	FRAME ASSLY SUS.& ENGINE SUPPORT	1	
2	644839R	EARTHING CABLE	1	
3	267065	SPACER FRONT	3	
4	136916	PLATE FOR RETAINING THE BRAKE FLEX. PIPE	3	
5	643692	THREE WAY UNION	1	
6	644813	BRAKE PUMP TUBE OF LEFT REAR WHEEL	1	
7	644812	BRAKE PUMP TUBE OF RIGHT REAR WHEEL	1	
8	20108	HEX NUT M8	6	
9	016408	SPRING WASHER	6	
10	31119	HEX HD SCREW M8 X 25	6	
10A	632247	HEX HDD SCREW M10X30 CC8.8	2	
11	604948	HEX.HDD BOLT M8 X 110 WITH POINTING	2	
12	265091	DUMPER ENGINE MTG.	3	
13	272178	HEX. HDD BOLT M8 X 122 CL 10.9	1	
14	15335	HEX HD NUT M8	3	
15	643711R	FRT CROSS MEMBER ASSY. ENG. MTG.	1	
16	231370	SELF BREAKING NUT M10	2	
17	286328	PLAIN WASHER 20X10.2X2	2	
18	568689	HEX HEAD BOLT M10X100	2	
19	569182	ENGINE COVER	1	
20	604606	HEX HD. SCREW M5X20 CL8.8	2	
21	3055	PLAIN WASHER M5	3	
22	6078	PLAIN WASHER 12 X 5.2 X 1	3	
23	15911	PAN SELF TAP SCREW 8SG X 16 AB	6	
24	272178	HEX. HDD BOLT M8 X 122 CL 10.9	2	
25	016408	SPRING WASHER	3	
26	644814R	FLEXIBLE BRAKE HOSE	2	
27	2383	PLAIN WASHER M20X8.5X2	4	
28	231370	SELF BREAKING NUT M10	2	
29	632299	PLATE	2	
30	31159	HEX HD SCREW M10 X 35 CC 8.8	2	
31	569377	PLATE	2	
32	569244	PLATE	2	
33	587533	SUPPORT ARM ENGINE RR SUB-ASSLY WITH IP	1	
34	16410	SPRING WASHER	2	

56

Print Date: 27-Mar-2022

PLATE-18
ENGINE SUPPORT

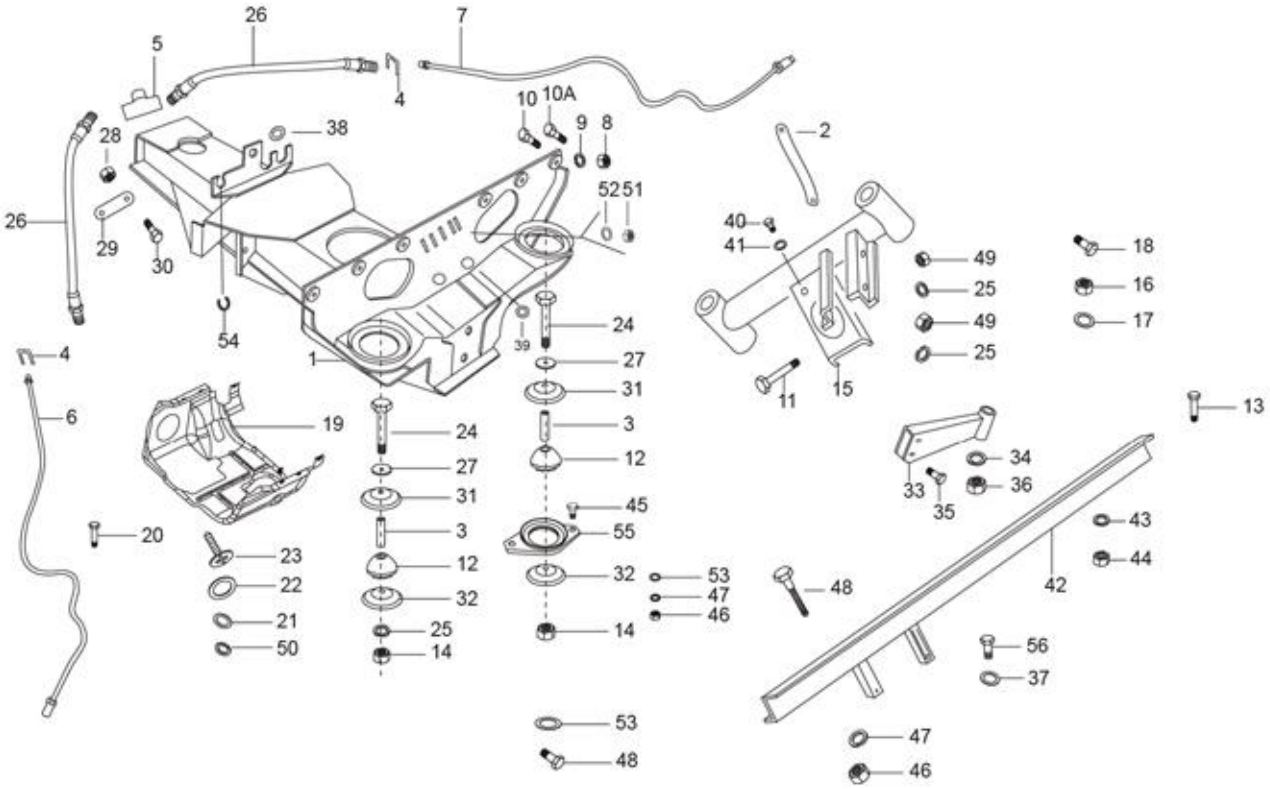
26
7
5
4
10
10A
9
8
38
2
28
52
51
26
29
30
40
41
49
25
49
25
18
16
17
54
39
24
27
31
3
12
45
55
32
53
47
46
14
1
4
6
19
24
27
31
3
12
32
25
14
11
15
13
34
36
33
35
43
44
42
20
23
22
21
50
48
56
37
53
48
47
46

57

Print Date: 27-Mar-2022

PLATE-18

ENGINE SUPPORT

Fig. No.	Part No.	Description	Qty	Remarks
35	B024614	HEX HEAD BOLT M10X45 CL 10.9	2	
36	20110	HEX NUT M10	2	
37	286328	PLAIN WASHER 20X10.2X2	6	
38	178610	GROMMET	1	
39	15478	GROMMET4	2	
40	31116	HEX HD. SCREW M8X16	3	
41	3058	PLAIN WASHER 15X8.4X1.5	1	
42	B001648	CROSS MEMBER ENGINE SUPPORT REAR SUB - ASSLY WITH I.P	1	
43	016408	SPRING WASHER	2	
44	20108	HEX NUT M8	2	
45	31118	SCREW M8X20	2	
46	20108	HEX NUT M8	4	
47	16410	SPRING WASHER	6	
48	568260	HEX HD BOLT M8X160 CL 8.8	2	
49	20110	HEX NUT M10	4	
50	16405	SPRING WASHER M5	2	
51	20105	PLAIN NUT M5	2	
52	3055	PLAIN WASHER M5	2	
52	6078	PLAIN WASHER 12 X 5.2 X 1	2	
53	286328	PLAIN WASHER 20X10.2X2	2	
54	568140	GROMMET	1	
55	567524	REAR RUBBER BUMPER SUPPORT	2	
56	31154	HEX HDD SCREW M10X22 CL 8.8	2	

58

Print Date: 27-Mar-2022

PLATE-19

CHASSIS FRAME, FUEL TANK & SEAT

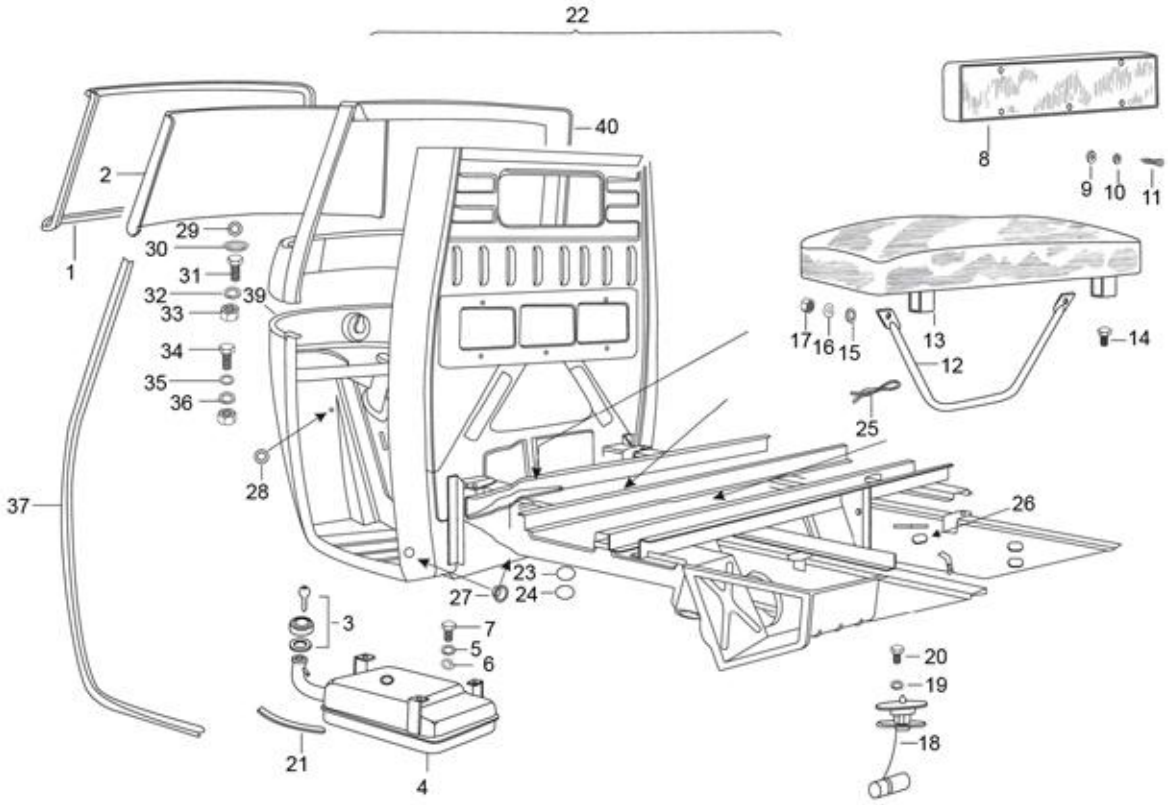
22
40
8
9
10
11
2
1
29
30
31
32
39
33
34
35
36
37
28
17
16
15
13
12
14
25
26
23
27
24
3
7
5
6
20
19
18
21
4

59

Print Date: 27-Mar-2022

PLATE-19

CHASSIS FRAME, FUEL TANK & SEAT

Fig. No.	Part No.	Description	Qty	Remarks
1	109012	WIND SHIELD PACKING	1	
2	587963	LAMINATED WINSHIELD GLASS	1	E - Marked (Export)
3	B024170	DIESEL TANK CAP WITH KEY	1	
4	643776	FUEL TANK ASSLY WITH TANK UNIT (VE)	1	
5	013880	PLAIN WASHER	4	
6	016406	SPRING WASHER	4	
7	31088	HEX HD SCREW M6 X 16 CL 8.8 (811061623)	4	
10	661627	DRIVER BACK REST (PASS.) (VE)	1	
10	661627	DRIVER BACK REST (PASS.) (VE)	1	
11	16405	SPRING WASHER M5	4	
12	16603	PLAIN WASHER (METALLIC)	4	
13	604606	HEX HD. SCREW M5X20 CL8.8	4	
14	567562	SEAT SUPPORT PIPE (COMM)	1	
14	587849	DRIVER SEAT SUPPORT PIPE (PASSENGER)	1	
15	B076023	PASS DRIVER SEAT ASSY-501 BSIV	1	
15	632997	COMM. DRIVER SEAT ASSY.	1	
16	31119	HEX HD SCREW M8 X 25	2	
17	3058	PLAIN WASHER 15X8.4X1.5	2	
18	016408	SPRING WASHER	2	
19	20108	HEX NUT M8	2	
20	567878R	TANK UNIT	1	
21	16405	SPRING WASHER M5	6	
22	B001912BL	MAIN FRAME ASSLY PASS CHA (GL435) BLACK	1	
22	B001912BW	MAIN FRAME ASSLY PASS CHA (GL435) BW	1	
22	B001912CB	MAIN FRAME ASSLY PASS CHA (GL435) CB	1	
22	B001912GY	MAIN FRAME ASSLY PASS CHA (GL435) GY	1	
22	B001912WR	MAIN FRAME ASSLY PASS CHA (GL435) WR	1	
23	587763	BREATHER PIPE	1	
24	31054	HEX HD. SCREW M5X10 CL8.8	6	
25	B002551	WINDSCREEN FRAME UPGRADE	1	
26	128009	CAPSULE	1	
27	128010	CAP	1	
28	568682	FASTENER	2	
29	190255	GROMMET (LONG MEMBER)	5	
30	190255	GROMMET (LONG MEMBER)	4	

60

Print Date: 27-Mar-2022

PLATE-19

CHASSIS FRAME, FUEL TANK & SEAT

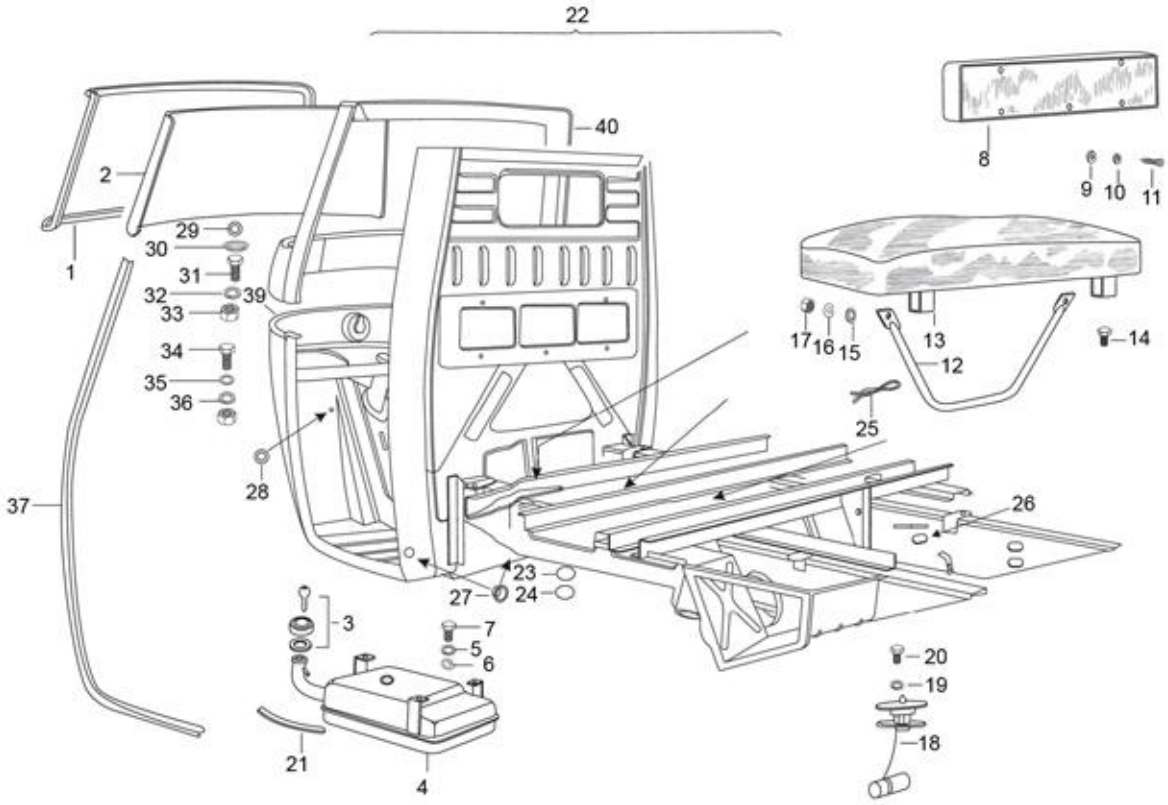
22
40
8
9
10
11
2
1
29
30
31
32
39
33
34
35
36
37
28
17
16
15
13
12
14
25
26
23
27
24
3
7
5
6
20
19
18
21
4

61

Print Date: 27-Mar-2022

PLATE-19

CHASSIS FRAME, FUEL TANK & SEAT

Fig. No.	Part No.	Description	Qty	Remarks
31	125998	PLUG	5	
32	125998	PLUG	2	
33	568131	PLUG DOME DIA. 21 MM - CAB BEHIND HL	4	
35	105392	GROMMET	1	
36	568154	CUT GROMMET FOR HORN	1	
37	B001386	HEX HEAD SCREW M5X20	9	
38	16405	SPRING WASHER M5	9	
39	20105	PLAIN NUT M5	9	
40	30072	HEX HEAD BOLT M8 X 35	2	
41	13861	PLAIN WASHER 20X8.2X2.5	2	
42	016408	SPRING WASHER	2	
43	118447	FRONT PACKING	2	
44	925888	RUBBER GASKET FOR TANK UNIT	1	

62

Print Date: 27-Mar-2022

PLATE-20
INNER PARTS OF CABIN

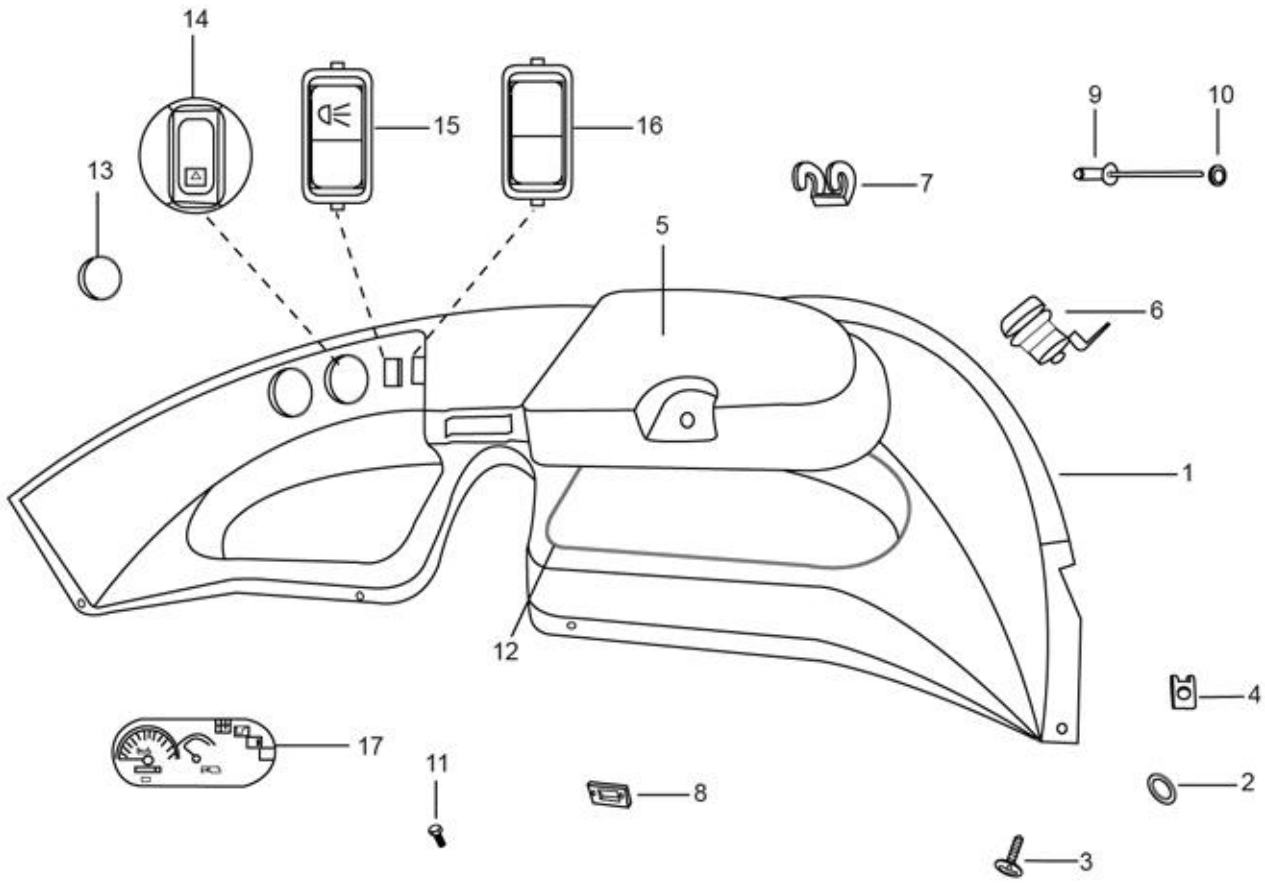
14
15
16
9
10
13
7
5
6
1
12
4
17
11
8
2
3

63

Print Date: 27-Mar-2022

PLATE-20

INNER PARTS OF CABIN

Fig. No.	Part No.	Description	Qty	Remarks
1	B041524	DASHBOARD S/A WITH GLOVE BOX COVER	1	
1	B041522	DASHBOARD (NS)	1	
2	16670	PLAIN WASHER 12X4.5X1	4	
3	15911	PAN SELF TAP SCREW 8SG X 16 AB	4	
4	8080	SPRING PLATE	4	
5	B041535	COVER; GLOVE BOX (NS)	1	
6	B024169	GLOVE BOX LOCK WITH KEY	1	
7	605389	HINGE	1	
8	643691	BOLT LOCK PLATE	1	
9	567893	POP RIVET 4 X 9.5	4	
10	003054	PLAIN WASHER	8	
11	660168	PAN SELF TP. SCREW 10 SGX13AB	4	
12	568671	GASKET - GLOW BOX COVER (N.I.)	4	
13	604984	CAP DASH BOARD	2	
14	587670R	SWITCH 3 POSITION	1	
15	660826R	HAZARD WARNING SWITCH WITH CROWN CAP (12V)(VE)	1	
16	587974R	WIPER MOTOR SWITCH/ SWITCH WIPER MOTOR	1	
17	661510R	INSTRUMENT CLUSTER WITH SHIFTED SPEEDOMETER - (INDICATION)	1	

64

Print Date: 27-Mar-2022

PLATE-21
CHASSIS COMPONENTS

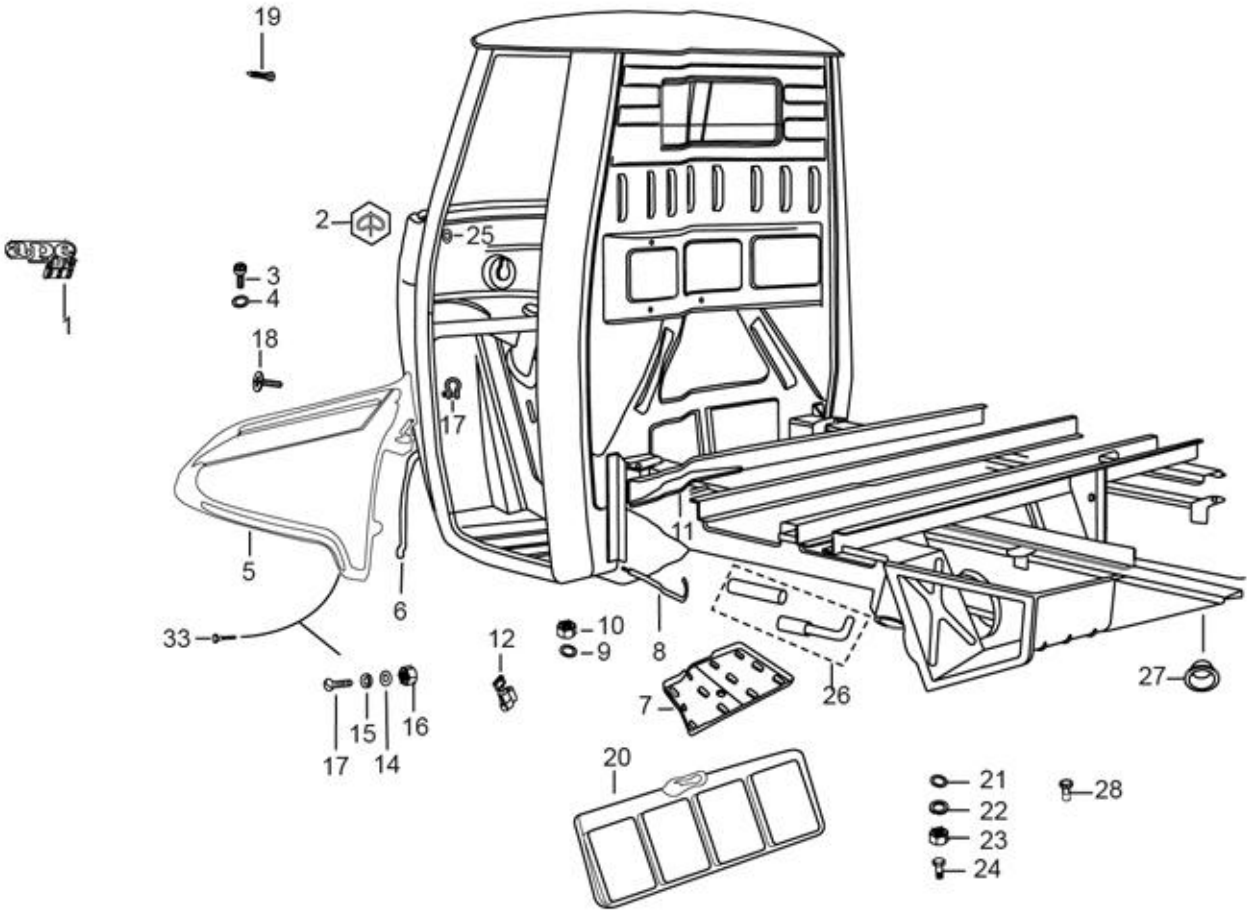
19
2
25
3
4
1
18
17
11
5
6
33
12
10
9
8
26
27
7
15
16
17
14
20
21
22
23
24
28

65

Print Date: 27-Mar-2022

PLATE-21
CHASSIS COMPONENTS

Fig. No.	Part No.	Description	Qty	Remarks
1	587969	NAME PLATE APE AUTO 3 D S	1	
2	B073088	HEX EMBLEM	1	
3	15727	PAN SELF TAPPING SCREW	2	
4	B008167	PL WASHER 12X3.2X1	2	
5	183138R	FRONT MUDGUARD VE	1	
5	B042611	FRONT MUD GUARD APE CLASSIC NEW	1	
6	568702	GASKET-FRT MUDGUARD TOP	2	
6	568703	GASKET FOR FRONT MUDGUARD	2	
7	567520	BATTERY TRAY	1	
8	604954	TENSION ROD	1	
9	3058	PLAIN WASHER 15X8.4X1.5	1	
10	20108	HEX NUT M8	1	
11	604691	ANGLE BAR ASSLY	1	
12	B024179	SPARE WHEEL LOCK WITH KEY	1	
13	31092	HEX. HD SCREW M6X25	2	
14	013880	PLAIN WASHER	12	
15	78307	BENT SPRING WASHER M6	6	
16	20106	HEX NUT M6	6	
17	157716	SCREW ANCHORE	3	
18	18630	PAN SELF TAP SCREW 6SG X 25AB	3	
19	8265	SELF TAPPING SCREW	2	
20	116103	MUD FLAP FRONT	1	
21	013880	PLAIN WASHER	4	
22	016406	SPRING WASHER	4	
23	20106	HEX NUT M6	4	
24	31088	HEX HD SCREW M6 X 16 CL 8.8 (811061623)	4	
25	003054	PLAIN WASHER	2	
26	632508	TENSION ROD ASSY. (BATTERY MOUNTING.)	1	
27	568131	PLUG DOME DIA. 21 MM - CAB BEHIND HL	2	
28	31089	HEX HEAD SCREW M6X18 CL 8.8	4	

66

Print Date: 27-Mar-2022

PLATE-22

RUBBER MAT, REAR MUDGUARD

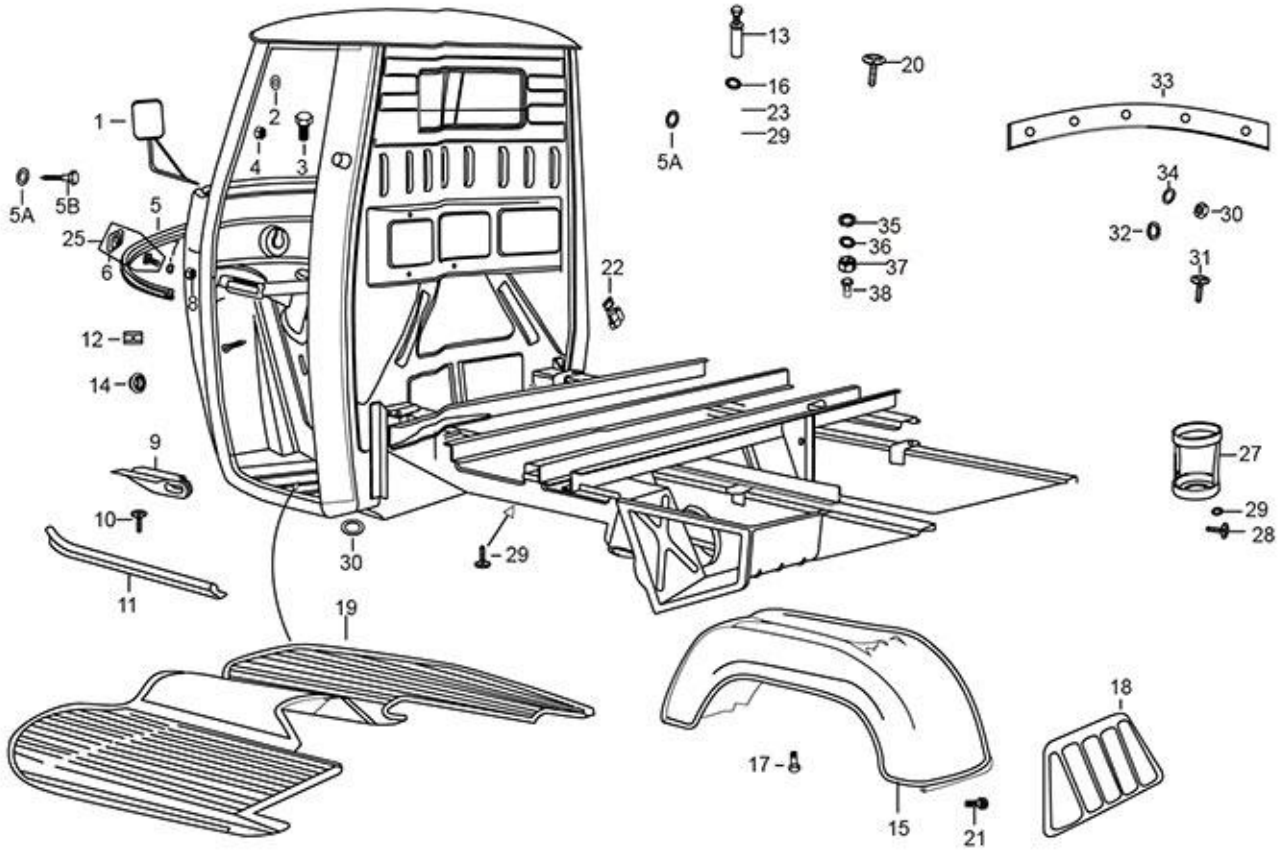
1
2
3
4
5
5A
5B
6
7
8
9
10
11
12
13
14
15
16
17
18
19
20
21
22
23
25
27
28
29
30
31
32
33
34
35
36
37
38

67

Print Date: 27-Mar-2022

PLATE-22

RUBBER MAT, REAR MUDGUARD

Fig. No.	Part No.	Description	Qty	Remarks
1	643685R	OUTER REAR VIEW MIRROR LH ASSY.	1	
1	643684R	OUTER REAR VIEW MIRROR RH ASSY.	1	
2	016408	SPRING WASHER	2	
2	12540	SPRING WASHER M8	2	
3	30072	HEX HEAD BOLT M8 X 35	2	
4	20108	HEX NUT M8	2	
5	190393	RIM COVERAGE JOINT	1	
5	B024645	RIM COVERAGE JOINT	1	
5A	14034	'O' RING	1	
5B	15911	PAN SELF TAP SCREW 8SG X 16 AB	2	
6	190462	PLATE ASSY.	5	
7	003054	PLAIN WASHER	5	
8	20104	HEX NUT M4	5	
10	8432	SCREW	6	
11	661634	PROTECTION GUIDE (LH) -VE	1	
11	661635	PROTECTION GUIDE (RH) -VE	1	
12	190465	TERMINAL	2	
12	B024855	TERMINAL	2	
13	15911	PAN SELF TAP SCREW 8SG X 16 AB	2	
14	76227	GROMMET	1	
15	B042612	REAR MUDGUARD RH/LH	1	
16	16603	PLAIN WASHER (METALLIC)	8	
17	604603	RIVET	8	
18	142424	MUDFLAP FOR RR MUDGUARD	1	
19	587662	CARPET	1	
20	414948	KNOB CARPET	4	
21	142425	BUTTON	4	
22	B024179	SPARE WHEEL LOCK WITH KEY	1	
23	568741	LOCK WASHER	3	
24	B002199	PACKING SOUND DAMPNER	12	
25	190462	PLATE ASSY.	5	
25 A	190479	JACK ASSY. COMPONENT	5	
26	3055	PLAIN WASHER M5	1	
26 A	6078	PLAIN WASHER 12 X 5.2 X 1	2	
27	645141	BOTTLE CARRIER STAND	1	

68

Print Date: 27-Mar-2022

PLATE-22

RUBBER MAT, REAR MUDGUARD

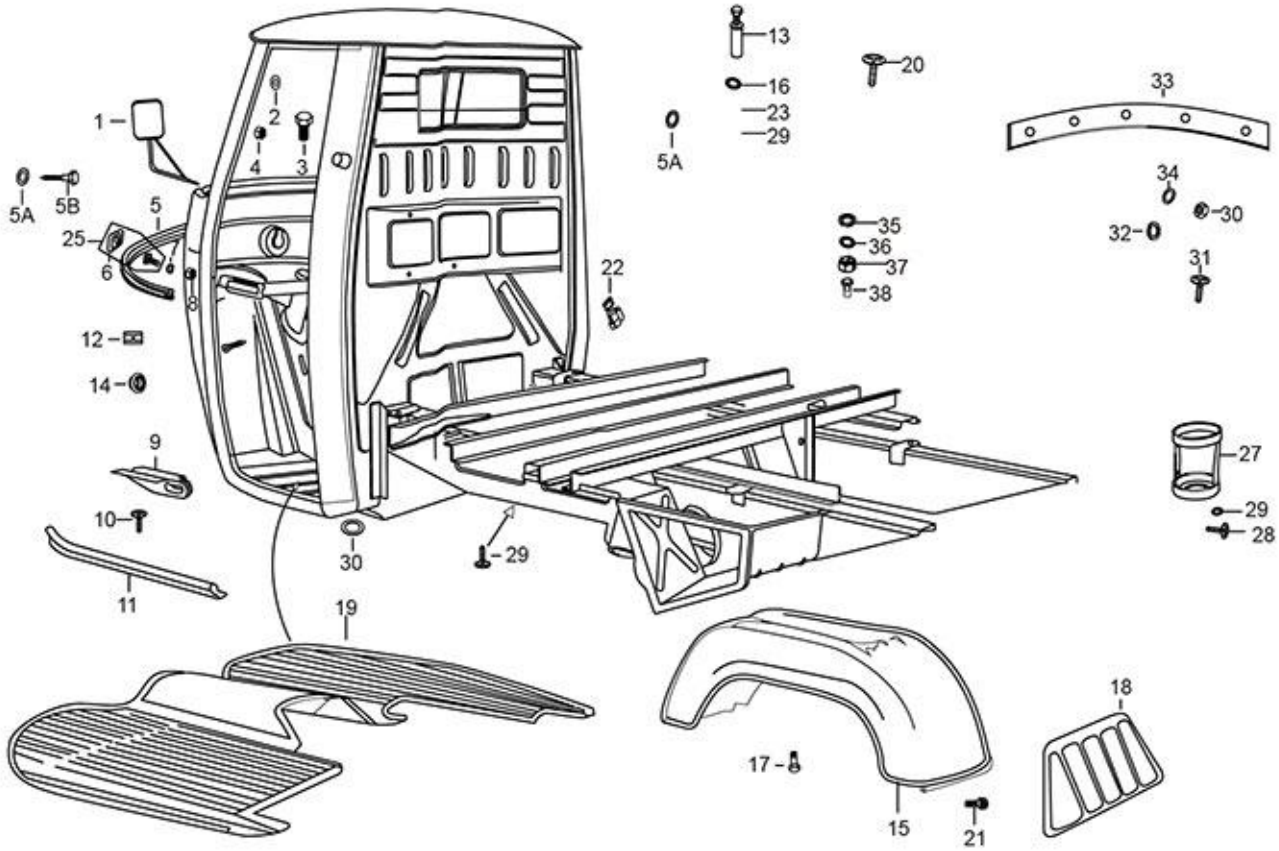
1
2
3
4
5
5A
5B
6
7
8
9
10
11
12
13
14
15
16
17
18
19
20
21
22
23
25
27
28
29
30
31
32
33
34
35
36
37
38

69

Print Date: 27-Mar-2022

PLATE-22

RUBBER MAT, REAR MUDGUARD

Fig. No.	Part No.	Description	Qty	Remarks
28	31058	HEX HEAD SCREW M5 X 16 CC8.8	2	
29	16405	SPRING WASHER M5	4	
30	20105	PLAIN NUT M5	7	
31	14628	CSK SELF TP.SCREW 6SG X 16 AB	10	
32	3055	PLAIN WASHER M5	7	
32	568135	WASHER(NI PLATED)	10	
33	587961	PROFILE SECTION SHORT FOR CARPET	1	
33	587962	PROFILE	1	
34	16405	SPRING WASHER M5	7	
35	12540	SPRING WASHER M8	2	
36	13861	PLAIN WASHER 20X8.2X2.5	2	
37	20108	HEX NUT M8	2	
38	30072	HEX HEAD BOLT M8 X 35	2	

70

Print Date: 27-Mar-2022

PLATE-23
DOORS, TOOLS AND WHEELS

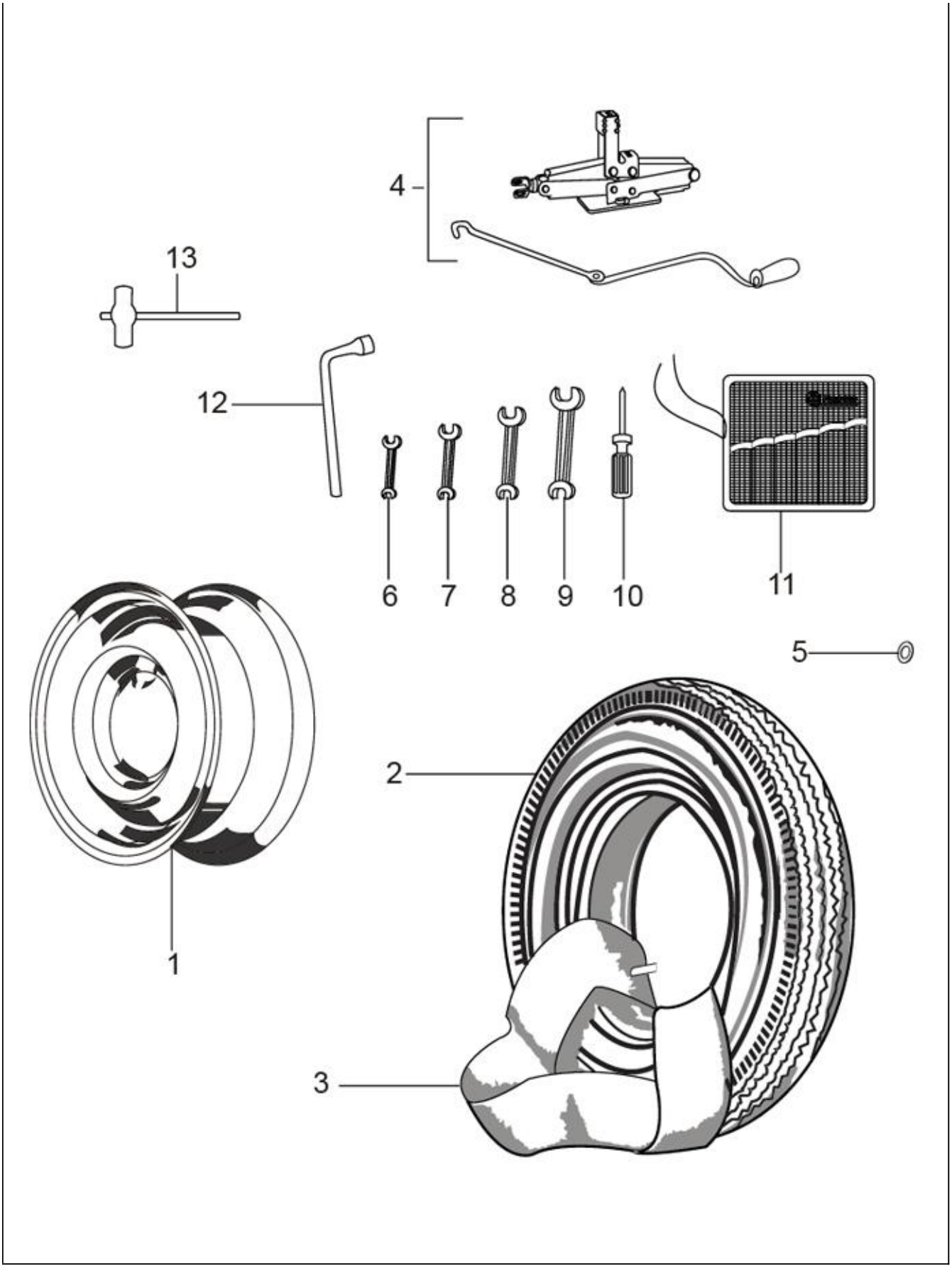
4
13
12
6
7
8
9
10
11
5
2
1
3

71

Print Date: 27-Mar-2022

PLATE-23

DOORS, TOOLS AND WHEELS

Fig. No.	Part No.	Description	Qty	Remarks
1	644973R	WHEEL RIM ASSY.	1	
2	587971	TYRE 4.50 X 10 8 PR	1	
3	151924	INNER TUBE TYRE 4.5 X 10 INCH	4	
4	B001954R	JACK ASSEMBLY COMPONENT	1	
5	6018	PL. WASHER	2	
6	567454	DOUBLE END SPANNER7/8	1	
7	567455	DE SPANNER 10X13 IS:2018(ZN PLATING)	1	
8	567456	DOUBLE END SPANNER 12/14	1	
9	567457	DE SPANNER 17/19	1	
10	567458	SCREW DRIVER (-)&(+) 80	1	
11	604707	TOOL BAG	1	
12	567459	L TYPE WHEEL SPANNER (A/F19)	1	
13	E500405518	STARTING ROPE	1	
13	192020017	STARTING ROPE	1	

72

Print Date: 27-Mar-2022

PLATE-24
REAR SUSPENSION

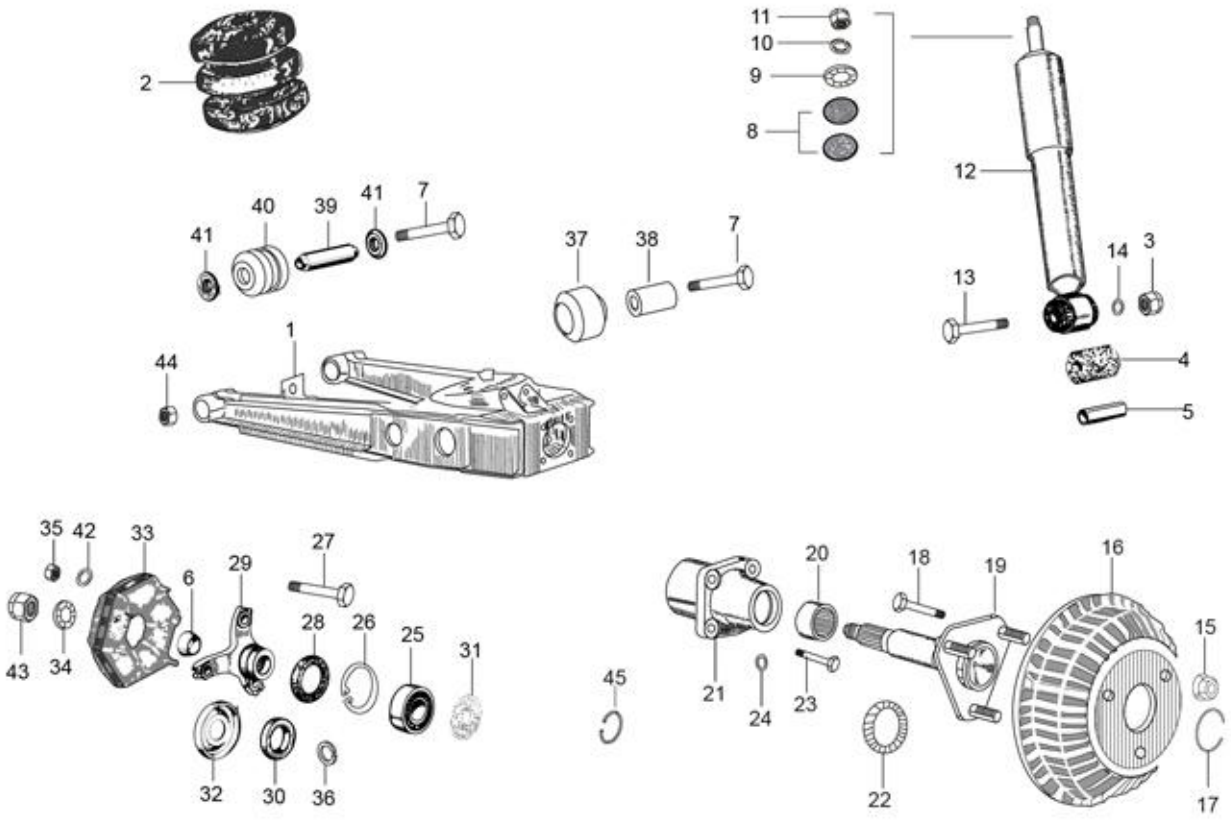
2
11
10
9
8
12
41
40
39
41
7
37
38
7
14
3
13
1
44
4
5
35
42
33
27
6
29
28
26
25
31
43
34
32
30
36
45
20
18
19
16
15
21
24
23
22
17

73

Print Date: 27-Mar-2022

PLATE-24

REAR SUSPENSION

Fig. No.	Part No.	Description	Qty	Remarks
1	6C000363	ARM ASSLY RH RR SUSP. WITH BUSH-REG	1	Communized with BS6
1	6C000362	ARM ASSLY LH RR SUSP. WITH BUSH-REG	1	Communized with BS6
2	568289	RUBBER BUMPER	2	
3	231370	SELF BREAKING NUT M10	2	
4	157103	BUSH - SHOCK ABSORBER	2	
5	107827	SPACER	1	
6	128633	CONE	2	
7	643741	HEX HDD BOLT M10 X 80 CL 12.9	4	
8	74414	RUBBER BUSH/BUFFER FOR COUPLING SHOCK ABSORBE	4	
9	6066	PL WASHER 10.5X38X9	2	
10	16410	SPRING WASHER	2	
11	20110	HEX NUT M10	2	
12	136451R	SHOCK ABSORBER REAR	2	
13	267068	HEX HEAD BOLT M10 X 60 CC 10.9	2	
14	286328	PLAIN WASHER 20X10.2X2	2	
15	660931	WHEEL NUT (M12 X 1.5)	3	
16	152580	BRAKE DRUM APE - 501	2	
17	107870	ELASTIC RING	2	
18	108215	BOLT FOR AXLE M12 X 40	3	
18	652520	BOLT FOR AXLE M12 X 40 (VE WHEEL RIM)	3	
19	6C000060	WHEEL AXLE	2	
20	661282	NEEDLE ROLLER BEARING	2	
21	6C000662	REAR WHEEL HUB	2	
22	20359	SEAL RING	2	
23	31159	HEX HD SCREW M10 X 35 CC 8.8	8	
24	16410	SPRING WASHER	8	
25	243303R	DEEP GROVE BALL BRG-RR WH AXLE	2	
26	6650	CIRCLIP DIA 50 (INT)	2	
27	15594	HEX HDD BOLT M10 X 35	6	
27.1	B024373	ALLEN BOLT M10X65 CL 10.9	6	
28	196302	OIL SEAL	2	
29	587617	ELASTIC JOINT CONNECTION HUB (WHL - SIDE)	2	
30	661267	RING	2	
31	602120	LEFT BRAKE JAW HOLDING CABLE PLATE	1	
31	602123	RIGHT BRAKE JAW HOLDING CABLE PLATE	1	

74

Print Date: 27-Mar-2022

PLATE-24
REAR SUSPENSION

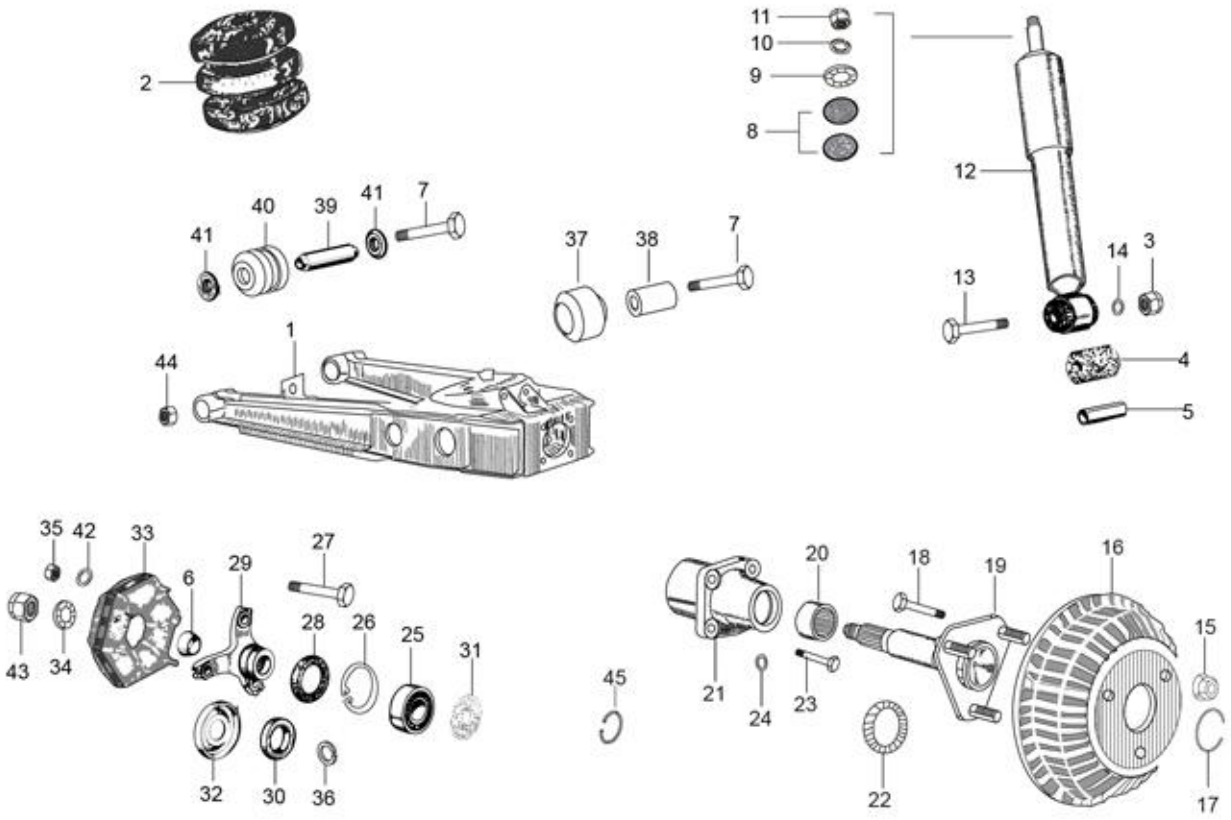
2
11
10
9
8
12
41
40
39
41
7
37
38
7
14
3
13
1
44
4
5
35
42
33
27
6
29
28
26
25
31
43
34
32
30
36
45
20
18
19
16
15
21
24
23
22
17

75

Print Date: 27-Mar-2022

PLATE-24
REAR SUSPENSION

Fig. No.	Part No.	Description	Qty	Remarks
32	109892	PROTECTION CUP RR HUB	2	
33	604535	FLEXIBLE COUPLING	1	
34	3068	PLAIN WASHER	2	
35	231370	SELF BREAKING NUT M10	12	
36	137026	SPRING RING	2	
37	226662	RING FOR ELASTIC SUPPORT	2	
38	226661	INTERNAL BUSH	2	
39	267065	SPACER FRONT	2	
40	226596	BUSH FRONT RING FOR ELASTIC SUPPORT	2	
41	267064	SHOULDER WASHER	4	
42	237246	SHIM WASHER 20X10.2X1	12	
43	136426	NUT WITH COLLAR	2	
44	231370	SELF BREAKING NUT M10	4	
45	137026	SPRING RING	2	

76

Print Date: 27-Mar-2022

PLATE-25

STEERING COLUMN AND FRONT SUSPENSION

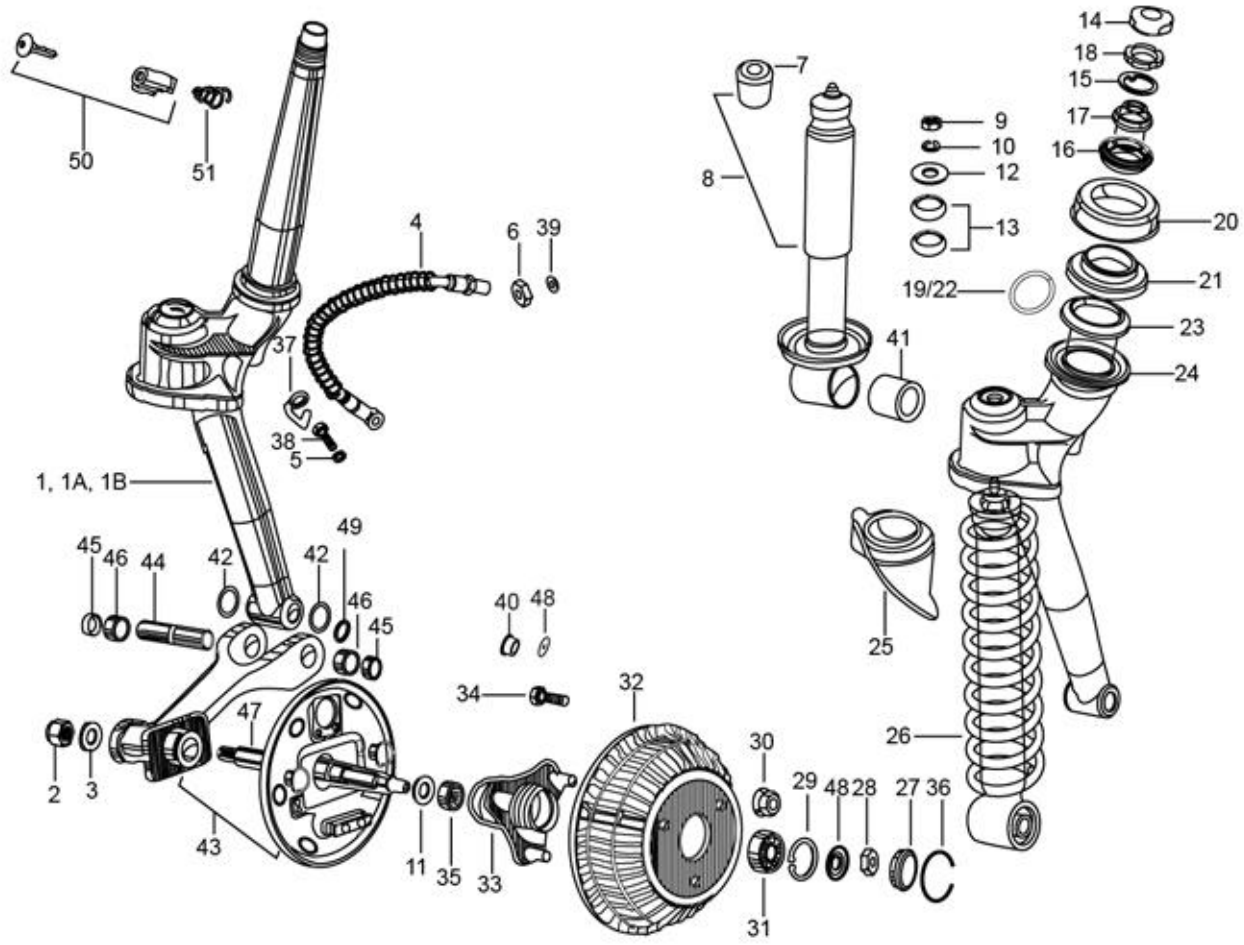
50
51
4
6
39
37
38
5
1, 1A, 1B
45
46
44
42
42
49
46
45
47
2
3
43
11
35
33
40
48
34
32
30
29
48
28
27
36
31
26
25
7
8
9
10
12
13
19/22
41
14
18
15
17
16
20
21
23
24

77

Print Date: 27-Mar-2022

PLATE-25

STEERING COLUMN AND FRONT SUSPENSION

Fig. No.	Part No.	Description	Qty	Remarks
1	660153	STEERING COLUM WITH I.P.	1	
1A	660498SP	STEERING COLUMN ASSLY (NRB) -501 REG SPD-PASS	1	
1B	660499SP	STEERING COLUMN ASSLY (NRB) -501 REG SPD	1	
2	568095	NYLOCK NUT	1	
3	87067	PLAIN WASHER 30.5X14.3X2	1	
4	644814R	FLEXIBLE BRAKE HOSE	1	
5	127927R	PACKING	2	
6	21216	HEX NUT M16 X 1.5	4	
7	75708	SILENT BLOCK	1	
8	569246R	FRONT SHOCK ABSORBER	1	
9	20110	HEX NUT M10	1	
10	16410	SPRING WASHER	1	
11	136434	OIL SEAL	1	
12	6066	PL WASHER 10.5X38X9	1	
13	74414	RUBBER BUSH/BUFFER FOR COUPLING SHOCK ABSORBE	2	
14	604758	PROTECTION	1	
15	108873	STOP WASHER FOR HOLDING	1	
16	567990	BEARING RACE UPPER BOTTOM	1	
17	567991	BEARING RACE UPPER TOP	1	
18	108874	SECURING RING NUT	1	
19	6C000190	UPPER BALL CAGE (VE)	1	
20	109064	DUST COVER	1	
21	567992	BEARING RACE LOWER TOP	1	
22	6C000191	LOWER BALL CAGE (VE)	1	
23	567993	BEARING RACE LOWER BOTTOM	1	
24	109066	WASHER WITH PROTECTION FOR BEARING	1	
25	109265	SPLASH GUARD DUST COVER	1	
26	569255	FRONT SUSPENSION SPRING	1	
27	107871	CAP	1	
28	74521	NUT M14 X 1.5	1	
29	567473	CIRCLIP DIA. 42 INT. (841004203)	1	
30	660931	WHEEL NUT (M12 X 1.5)	3	
31	30209R	BALL BEARING FRONT WHEEL HUB	1	
32	152580	BRAKE DRUM APE - 501	1	
33	652521	FR. WHEEL HUB ASSY.	1	

78

Print Date: 27-Mar-2022

PLATE-25

STEERING COLUMN AND FRONT SUSPENSION

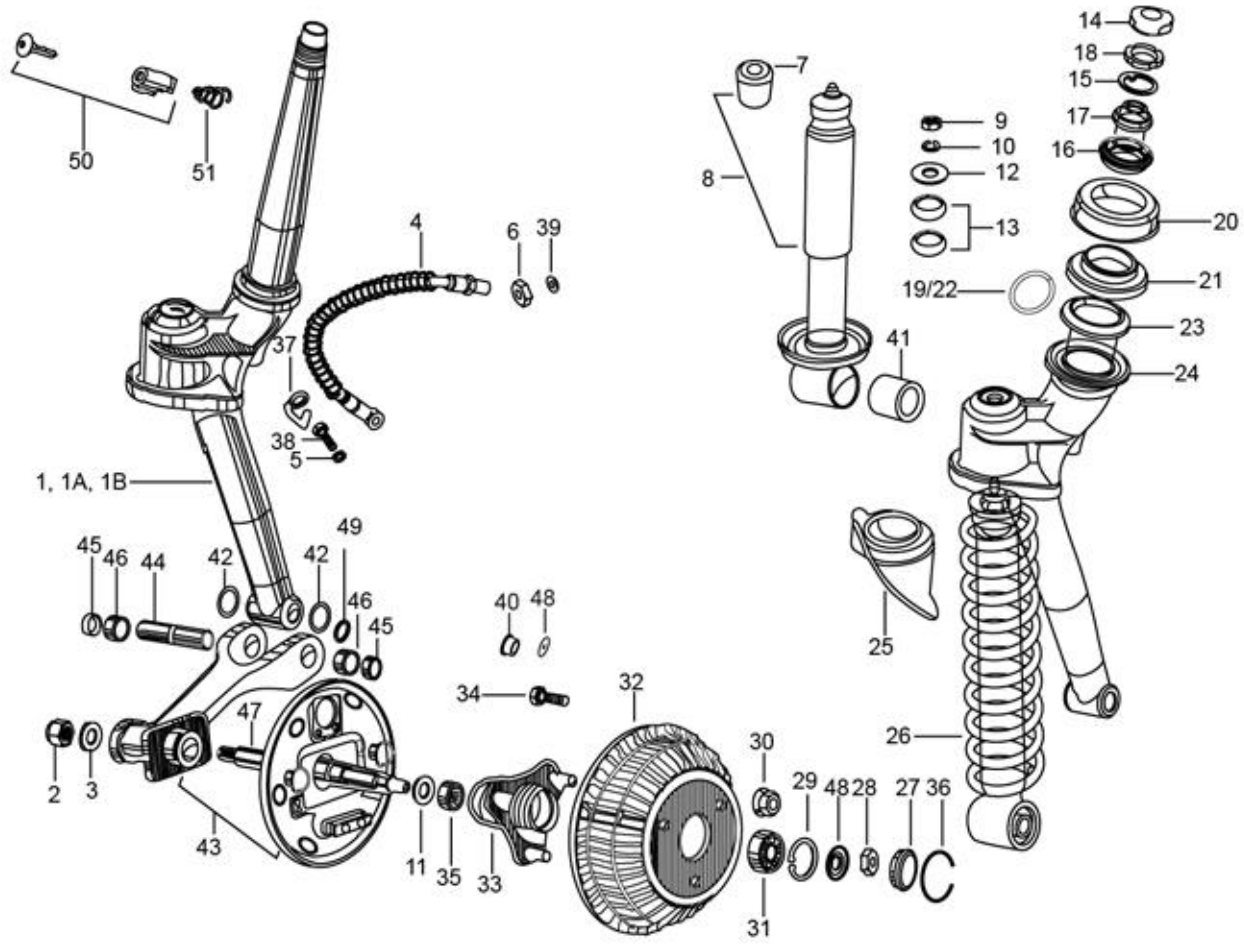
50
51
4
6
39
37
38
5
1, 1A, 1B
45
46
44
42
42
49
46
45
40
48
34
32
47
2
3
43
11
35
33
30
29
48
28
27
36
31
26
25
7
8
9
10
12
13
19/22
41
14
18
15
17
16
20
21
23
24

79

Print Date: 27-Mar-2022

PLATE-25

STEERING COLUMN AND FRONT SUSPENSION

Fig. No.	Part No.	Description	Qty	Remarks
34	652520	BOLT FOR AXLE M12 X 40 (VE WHEEL RIM)	1	
34	108215	BOLT FOR AXLE M12 X 40	1	
35	125289	NEEDLE BEARING, CRANKASE, FRONT WHEEL	1	
36	107870	ELASTIC RING	2	
37	B003228	LOCK PLATE FRONT BRAKE HOSE	1	
38	587829	BENJO BOLT	1	
39	48197	PL WASHER 24X16X1.5	3	
40	107732	BUSH FOR SILENT BLOCK	1	
41	109117	RUBBER BUSH (FRT SHOCK ABSORBER) / RING	1	
41	566545	RUBBER BUSH (FRT SHOCK ABSORBER) - MODIFIED	1	
42	6733	O RING	2	
43	616541	BRACKET WHEEL CARRIER WITH PI	1	
44	137235	STEERING PIN	1	
45	8771	OIL SEAL (18-24-4)	2	
46	107718	ROLLER BUSH	2	
47	643772R	FRONT WHEEL AXLE	1	
48	180431	COIN WASHER	1	
49	150579	RING FOR HOLDING TYPE J F101 17A	2	
50	B024732	STG LOCK ASSLY WITH KEY	1	
51	569150	SPRING; STEERING LOCK (MODIFIED)	1	
52	661231	CIRCLIP STEERING LOCK DIA 16 (INT)	1	
53	604759	RUBBER CAP STEERING COLUMN (N.I.)	1	
54	604758	PROTECTION	1	
55	KIT940003R	STEERING PIN KIT WITH O RING	1	
56	KIT 95021	STEERING CONE SET UPPER CONSISTINMG OF SR NOS 16 & 17 (N.I.)	1	
57	KIT 95022	STEERING CONE SET UPPER CONSISTINMG OF SR NOS 21 & 23 (N.I.)	1	
58	KIT96033R	MODIFIED BALL KIT FOR 3WH (WHITE)	1	

80

Print Date: 27-Mar-2022

PLATE-26
HANDLE BAR AND CONTROL

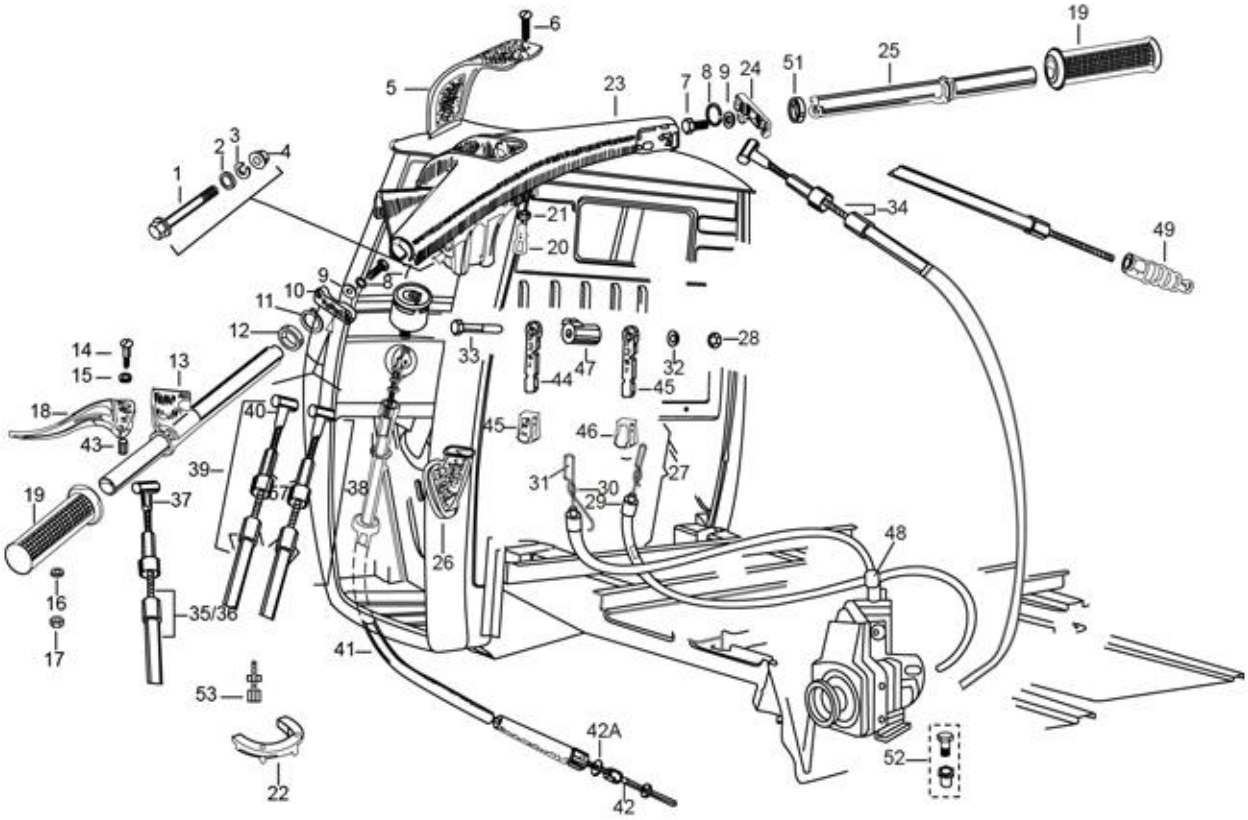
6
19
5
23
7
8
9
24
51
25
2
3
4
1
21
20
34
49
9
8
10
11
12
33
44
47
32
28
14
15
13
45
18
40
45
46
43
39
31
30
27
19
37
38
29
26
48
16
35/36
17
41
53
42A
52
22
42

81

Print Date: 27-Mar-2022

PLATE-26

HANDLE BAR AND CONTROL

Fig. No.	Part No.	Description	Qty	Remarks
1	30103	HANDLE SECURING BOLT M10 X 70 CL 8.8	1	
2	16626	PLAIN WASHER (18X10.5X2)	2	
3	16410	SPRING WASHER	1	
4	20110	HEX NUT M10	1	
5	B041600	HANDLE BAR COVER	1	
5	B041600	HANDLE BAR COVER	1	
6	632158	CSK HEAD SCREW	1	
7	31089	HEX HEAD SCREW M6X18 CL 8.8	2	
8	016406	SPRING WASHER	2	
9	6125	PLAIN WASHER (14X6.4X1.5)	2	
10	109775	GEAR CONTROL LEVER S/A	1	
11	60565	SPRING WASHER	1	
12	109404	WASHER OF RABBET(41737)	1	
13	127451	TUBE WITH TERMINAL S/A	1	
14	B075313	SCREW FOR CLUTCH LEVER (NEW)	1	
15	16319	BENT SPRING WASHER	1	
16	16620	PLAIN WASHER	1	
17	12138	NYLOCK NUT M6	1	
18	164906	CLUTCH CONTROL LEVER	1	
19	141925	HANDLE	2	
20	197071	ADJUSTER SCREW M6	2	
21	20106	HEX NUT M6	2	
22	126902	PROTECTION COLLAR CABLE	1	
23	B002823	HANDLE (‘T’ TYPE)	1	
24	109635	THROTTLE CONTROL LEVER WITH IP	1	
25	587902	ACCELERATOR TUBE ASSY.	1	
26	109227	PROTECTION GROMMET	1	
27	604515	ENGINE STOP CONTROL TRANSMISSION ASSLY	1	
28	2438	HEX SELF LOCKING NUT	1	
29	604509	ENGINE STOP CONTROL CABLE INNER	1	
30	B001505	DECOMPRESSION TRANSMISSION ASSLY FOR ST	1	
30	660351	DECOMPRESSOR CONTROL CABLE	1	
31	604508	DECOMPRESSOR CONTROL CABLE INNER	1	
32	7608	WASHER	1	
33	30077	HEX HEAD SCREW	1	

82

Print Date: 27-Mar-2022

PLATE-26
HANDLE BAR AND CONTROL

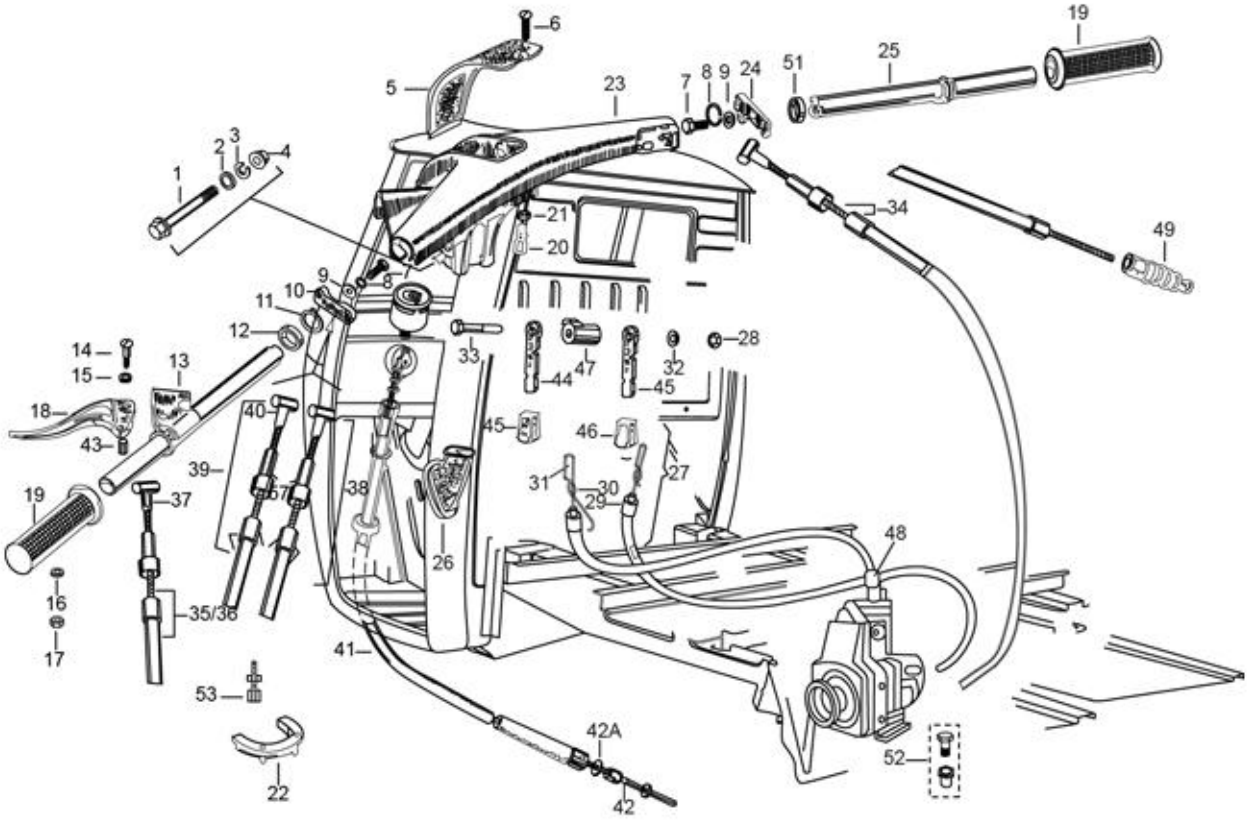
6
19
5
23
7
8
9
24
51
25
2
3
4
1
21
20
34
49
9
8
10
11
12
14
15
13
33
44
47
32
28
45
18
40
43
45
46
39
31
30
27
19
37
38
29
26
48
16
35/36
17
41
53
42A
52
22
42

83

Print Date: 27-Mar-2022

PLATE-26

HANDLE BAR AND CONTROL

Fig. No.	Part No.	Description	Qty	Remarks
34	587631	GASOLINE CONTROL TRANSMISSION ASSY.	1	
34	587802	GASOLINE CONTROL CABLE WITH TERMINAL	1	
35	604779	CLUTCH CONTROL TRANSMISSION ASSLY.	1	
35	6A001046R	CLUTCH CONTROL TRANSMISSION ASSLY.	1	For Aluminium Clutch PASS./PU
35	B076807R	CLUTCH CONTROL TRANS. ASSY 501 PASS	1	For OLD Clutch PASS./PU
36	660141	CLUTCH CONTROL CABLE WITH TERMINAL	1	
37	587806	CLUTCH CONTROL CABLE WITH TERMINAL	1	
38	587628	CABLE GEAR CONTROL ASSY. (DARK GREY)	1	
39	587919	CABLE GEAR CONTROL ASSY. NO. 2 (LIGHT GREY)	1	
40	587803	WIRE, GEAR CONTROL WITH TERMINAL	2	
40A	20105	PLAIN NUT M5	2	
41	645124	SPEEDO CABLE	1	
42	587812	TRANSMISSION CABLE (INNER) FOR ODOMETER	1	
42A	97756	METALLIC PLAIN WASHER	4	
43	125181	SPACER	1	
44	119928	LEVER	2	
45	604716	KNOB FOR ENGINE STOP	1	
46	604715	KNOB FOR DECOMPRESSION	1	
47	119181	SPACER	1	
48	119278	TERMINAL	1	
49	118806	PROTECTION BELLOW	2	
50	15478	GROMMET4	2	
51	587904	SINTERED WASHER HANDLE BAR (41769)	1	
52	B024379	SCREW TERMINAL ASSLY-ENGINE STOP,D.C.	1	
53	197071	ADJUSTER SCREW M6	2	

84

Print Date: 27-Mar-2022

PLATE-27

BRAKE - TANDEM MASTER CYLINDER, BRAKE PIPE AND HAND BRAKES

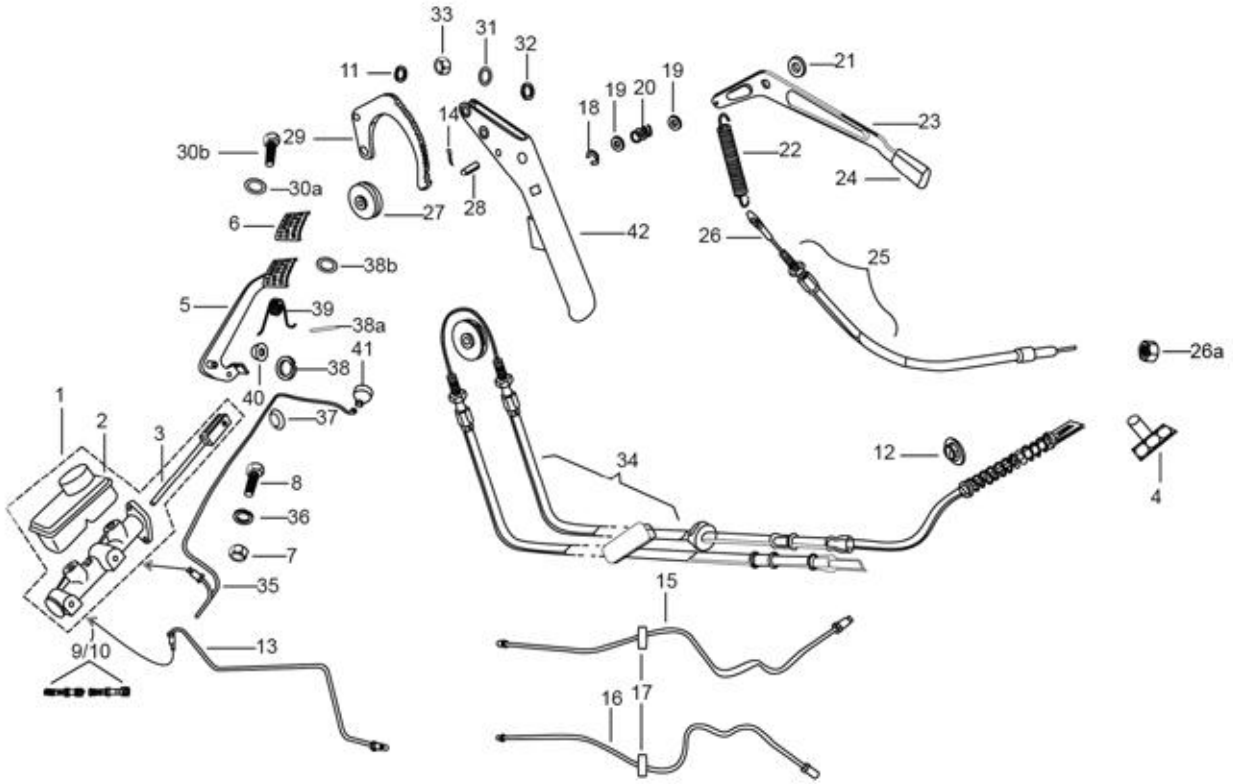
33
31
32
11
21
19
19
20
18
14
23
30b
29
22
24
30a
27
28
6
42
26
25
38b
5
39
38a
26a
41
38
40
1
37
2
3
12
34
4
8
36
7
35
15
9/10
13
16
17

85

Print Date: 27-Mar-2022

PLATE-27

BRAKE - TANDEM MASTER CYLINDER, BRAKE PIPE AND HAND BRAKES

Fig. No.	Part No.	Description	Qty	Remarks
1	604615	TANDEM MASTER CYLINDER ASSLY	1	
2	587773	BRAKE OIL TANK	1	
3	587702	PUSH ROD	1	
4	119278	TERMINAL	1	
5	604760	BRAKE PEDAL WITH FOOT REST ASSLY	1	
6	567461	RUBBER PROTECTION FOR PEDAL	1	
7	20108	HEX NUT M8	2	
8	31122	HEX HD. SCREW M8X30 CL 8.8	2	
8	016408	SPRING WASHER	2	
9	925508	MAJOR KIT TMC (KBX 1008)	1	
10	925509	MINOR KIT TMC (KBX 1009)	1	
11	016408	SPRING WASHER	1	
12	604502	CUP RETAINING SPRING (41733)	2	
13	B075852	BRAKE TUBE FOR REAR WHEEL	1	
14	12761	SPLIT PIN	1	
15	644813	BRAKE PUMP TUBE OF LEFT REAR WHEEL	1	
16	644812	BRAKE PUMP TUBE OF RIGHT REAR WHEEL	1	
18	5969	CIRCLIP DIA 9 E TYPE	1	
19	6173	METALLIC PLAIN WASHER (808001026)	1	
20	108785	SPRING	1	
21	B042317	SPACER-RC LEVER	1	
22	567690	REVERSE GEAR COUPLING SPRING	1	
23	125411	BACKING COMMAND LEVER	1	
24	604717	KNOB FOR R.C.	1	
25	587633	CABLE, REVERSE GEAR CONTROL ASSY.	1	
26	587822	CABLE, REVERSE GEAR WITH TERMINALS.	1	
26A	20105	PLAIN NUT M5	2	
27	567898	PULLEY FOR HAND BRAKE	1	
28	567899	CLEVIS PIN	1	
29	B042794	RATCHET , HAND BRAKE CONTROL	1	
30A	140728	PLAIN WASHER 8.5 X 24 X 3	6	
30B	31118	SCREW M8X20	1	
31	6173	METALLIC PLAIN WASHER (808001026)	1	
31	13812	METALLIC PLAIN WASHER	1	
32	6411	EXT CIRCLIP DIA 11	1	

86

Print Date: 27-Mar-2022

PLATE-27

BRAKE - TANDEM MASTER CYLINDER, BRAKE PIPE AND HAND BRAKES

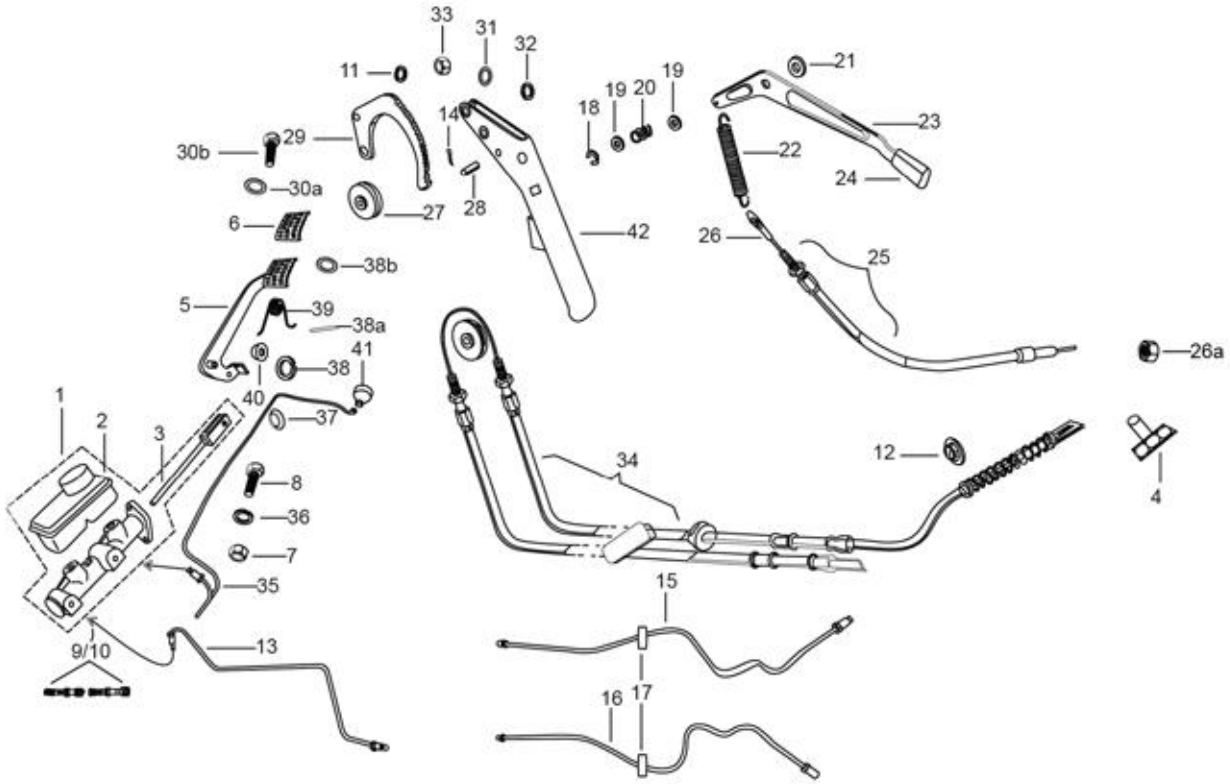
33
31
32
11
21
19
19
20
18
14
23
30b
29
22
24
30a
27
28
6
42
26
25
38b
5
39
38a
26a
41
38
40
1
37
2
3
12
34
4
8
36
7
35
15
9/10
13
16
17

87

Print Date: 27-Mar-2022

PLATE-27

BRAKE - TANDEM MASTER CYLINDER, BRAKE PIPE AND HAND BRAKES

Fig. No.	Part No.	Description	Qty	Remarks
33	20108	HEX NUT M8	1	
34	567719	CABLE,HAND BRAKE CONTROL ASSLY	1	
35	568161	TUBE BETWEEN TMC & FRT WHEEL	1	
36	016408	SPRING WASHER	2	
37	6414	CIRCLIP DIA. 14 (EXT)	1	
38	843000809	CIRCLIP DIA.8(EXT) TYPE C	1	
38A	567920	SPLIT PIN	1	
38A	568737	SPLIT PIN 4 X 25 (821 0425 2 2)	1	
38B	3058	PLAIN WASHER 15X8.4X1.5	1	
39	587928	FOOT BRAKE PEDAL SPRING	1	
40	229524	WASHER 21X14.3X2	1	
41	138237	CAP	1	
42	567746G1	HAND BRAKE LEVER (WITH POWDER COATING)	1	

88

Print Date: 27-Mar-2022

PLATE-28
ELECTRICAL DEVICES

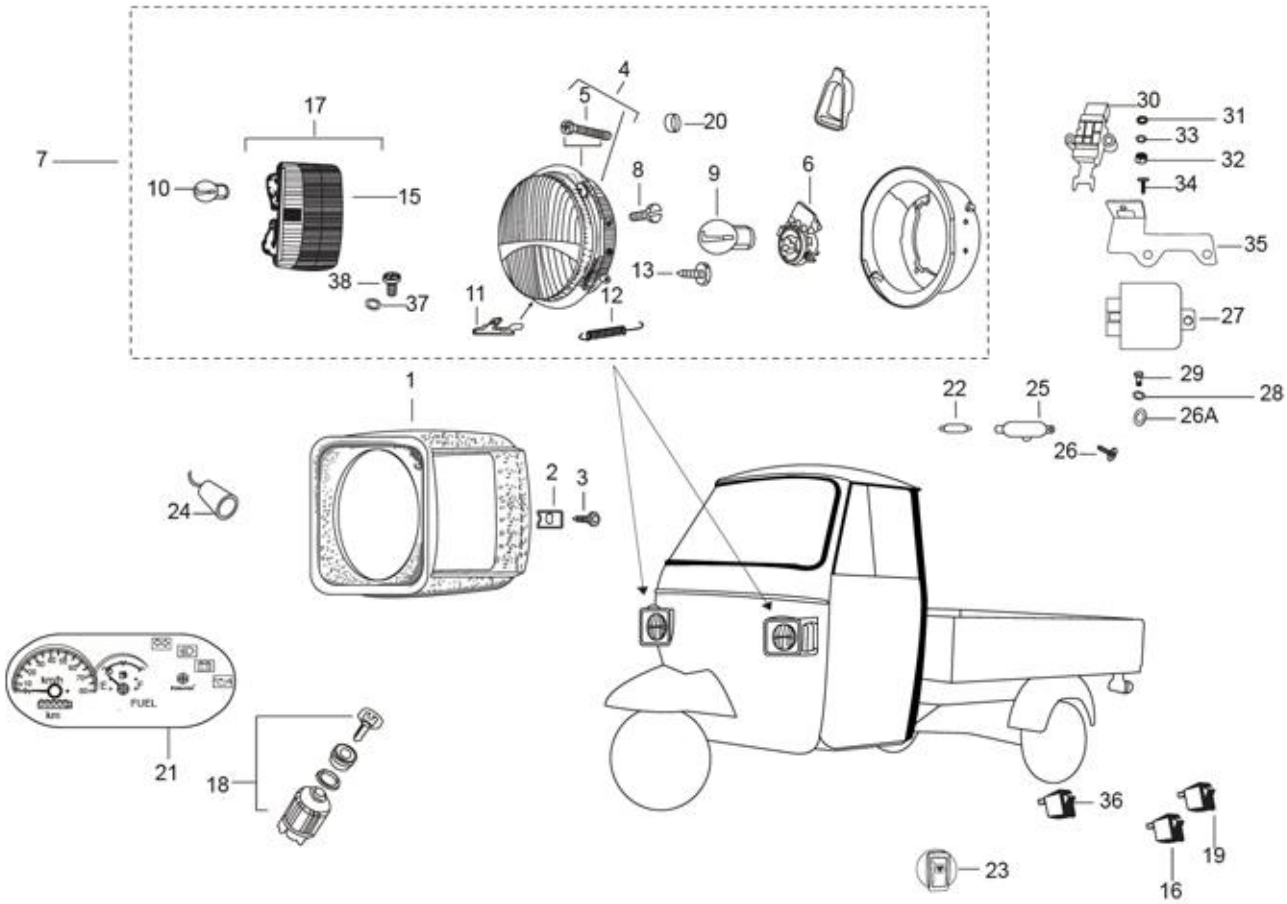
7
10
17
15
38
37
4
5
20
8
9
6
13
11
12
30
31
33
32
34
35
27
29
28
26A
22
25
26
1
2
3
24
21
18
36
19
16
23

89

Print Date: 27-Mar-2022

PLATE-28

ELECTRICAL DEVICES

Fig. No.	Part No.	Description	Qty	Remarks
1	B025600	SEAT OF LAMP RIGHT	1	
1	B025601	SEAT OF LAMP LEFT	1	
2	8080	SPRING PLATE	2	
3	15900	HEAD LAMP SECURING SCREW/PAN SELF TAP SCREW	2	
4	925590	HEAD LAMP SEAL BEAM WITH HOLE	4	
5	15641	HEAD LAMP ADJUSTING SCREW	4	
6	114121	BULB HOLDER / HOLDER FRONT LAMP	2	
7	632478R	ASSY. HEAD LAMP WITH LATERAL LAMP LH	1	
7	632477R	ASSY. HEAD LAMP WITH LATERAL LAMP RH	1	
8	8432	SCREW	2	
8	15900	HEAD LAMP SECURING SCREW/PAN SELF TAP SCREW	3	
9	219528	BULB 12V 35/35W	2	
10	925581	INDICATOR LIGHT BULB 12V 21W AMBER COLOUR	2	
11	119735	PROTECTION SECURING SPRING/SPR. FOR PROTECTION	4	
12	127179	SPRING FOR HEAD LAMP / SPRING	2	
13	15900	HEAD LAMP SECURING SCREW/PAN SELF TAP SCREW	6	
14	567593	BULB 12V 5W / LAMP 4W	2	
15	925579	H.L. LATERAL LAMP LENSE RH - NEOLITE	1	
15	925580	H.L. LATERAL LAMP LENSE LH - NEOLITE	1	
15	925578	H.L. LATERAL LAMP LENSE LH - LUMAX	1	
15	925577	H.L. LATERAL LAMP LENSE RH - LUMAX	1	
16	587670R	SWITCH 3 POSITION	1	
17	925587	LATERAL LAMP ASSY. RH (NEOLITE)	1	
17	925597	LATERAL LAMP ASSY. LH (NEOLITE)	1	
17	925588	LATERAL LAMP ASSY. RH (LUMAX)	1	
17	925598	LATERAL LAMP ASSY. L H (LUMAX)	1	
18	643502	LOCK SET WITH KEYS (PASS) (COMMON KEY)	1	
18	B024740	STARTER/IGN SWITCH ASSLY WITH KEYCNG/LPG	1	
19	587974R	WIPER MOTOR SWITCH/ SWITCH WIPER MOTOR	1	
20	119975	GROMMET	2	
21	661510R	INSTRUMENT CLUSTER WITH SHIFTED SPEEDOMETER - (INDICATION)	1	
22	71633	STOP AND PARKING BULB 12V 10/5 W	1	
23	660826R	HAZARD WARNING SWITCH WITH CROWN CAP (12V)(VE)	1	
24	645153R	MOBILE CHARGER SOCKET	1	
25	150041R	CABIN LIGHT ASSY. (W/O BULB)	1	

90

Print Date: 27-Mar-2022

PLATE-28
ELECTRICAL DEVICES

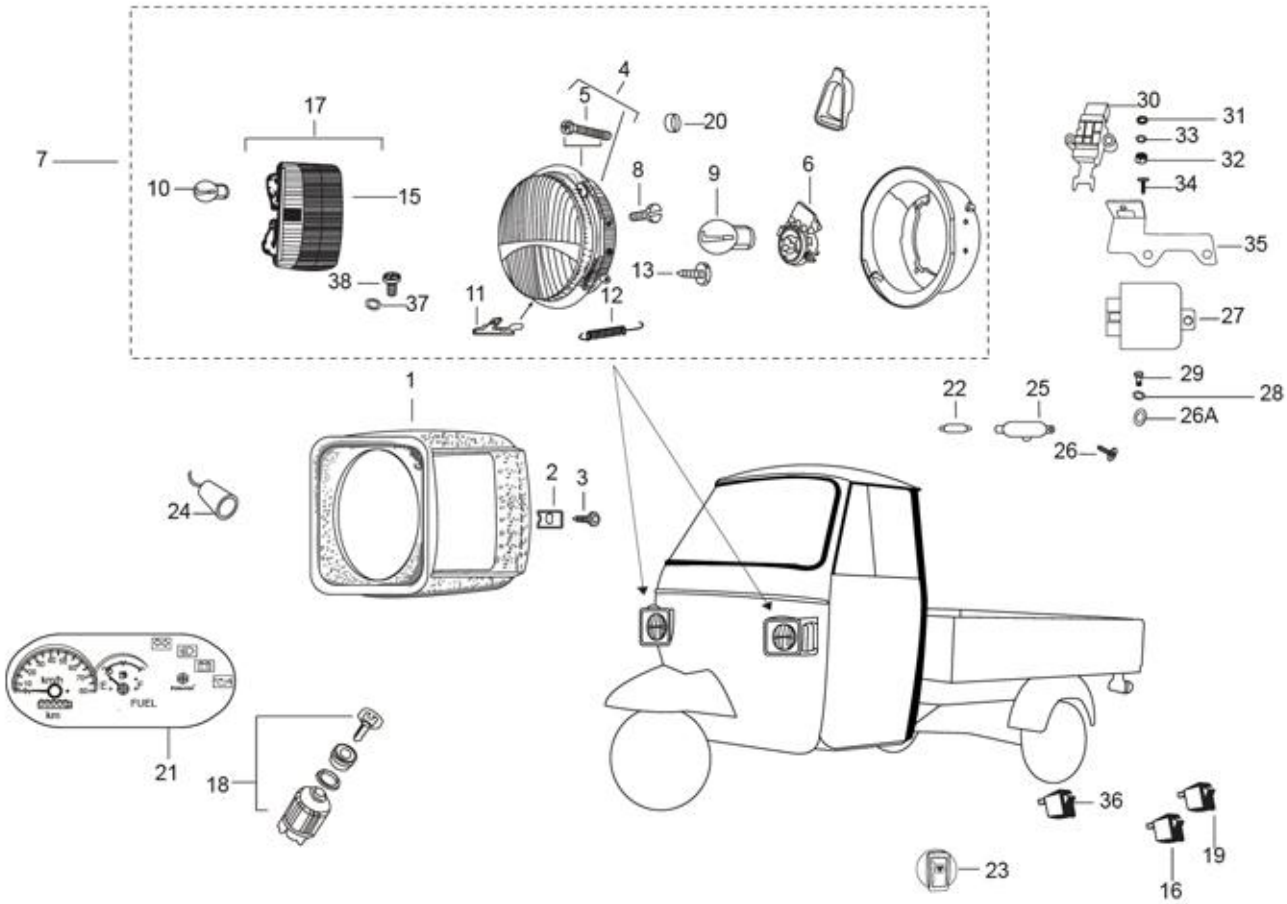
7
10
17
15
38
37
4
5
20
8
9
6
13
11
12
30
31
33
32
34
35
27
29
28
26A
26
22
25
1
2
3
24
21
18
36
19
16
23

91

Print Date: 27-Mar-2022

PLATE-28
ELECTRICAL DEVICES

Fig. No.	Part No.	Description	Qty	Remarks
26	15727	PAN SELF TAPPING SCREW	4	
26A	003054	PLAIN WASHER	4	
27	B023726R	REMOTE CONTROL SWITCH	1	
28	3056	PLAIN WASHER M6 OD12	1	
29	31088	HEX HD SCREW M6 X 16 CL 8.8 (811061623)	1	
30	B002101	STARTER SAFETY SWITCH ASSLY.	1	
31	016404	SPRING WASHER M4	2	
32	20104	HEX NUT M4	2	
33	003054	PLAIN WASHER	4	
34	B001503	PHILP RD HD SCREW (M4 X 20)	2	
35	B002101	STARTER SAFETY SWITCH ASSLY.	1	
36	B023727R	CONTACTOR	1	
37	3055	PLAIN WASHER M5	2	
38	661925	PHILIP PAN HEAD SCREW (M5 X 0.8 X 1.6)	4	

92

Print Date: 27-Mar-2022

PLATE-29
ELECTRICAL DEVICES

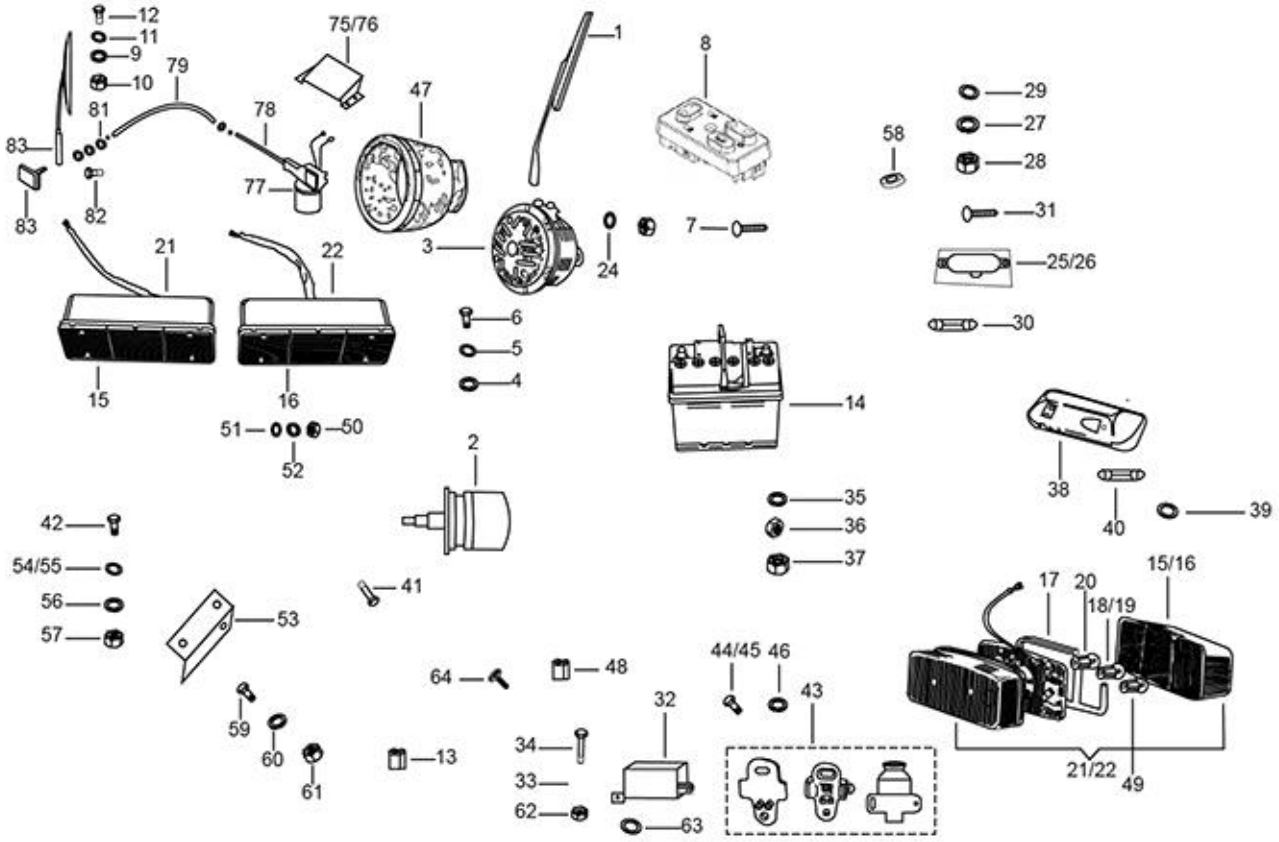
12
11
9
10
79
81
83
83
82
75/76
78
77
47
1
8
29
27
28
58
31
7
3
24
25/26
21
22
6
5
4
30
15
16
14
51
50
52
2
38
40
39
35
36
37
42
54/55
56
57
41
53
17
20
18/19
15/16
64
48
44/45
46
43
32
59
60
61
13
34
33
62
63
21/22
49

93

Print Date: 27-Mar-2022

PLATE-29

ELECTRICAL DEVICES

Fig. No.	Part No.	Description	Qty	Remarks
1	632292	WIPER ARM & BLADE ASSY	1	
2	632995	WIPER MOTOR ASSY. WITH MTG. BKT.	1	
3	B04100R	HORN 3 WH _ E MARK	1	
4	016408	SPRING WASHER	1	
5	3058	PLAIN WASHER 15X8.4X1.5	1	
6	31116	HEX HD. SCREW M8X16	1	
7	15640	SCREW SECURING SWITCH	1	
8	B073850R	HBS (ST. BUTTON) - CITY UPGRADE (NEW) _ALL NUOVO MODEL	1	FOR PUSH BUTTON_HBS
9	016406	SPRING WASHER	6	
10	20106	HEX NUT M6	6	
11	3056	PLAIN WASHER M6 OD12	6	
12	31088	HEX HD SCREW M6 X 16 CL 8.8 (811061623)	6	
13	604557	FUSE (10A)	6	
14	587650R	BATTERIES FOR 3WH (50AH)	1	Domestic
14	B006806	BATTERY(EXIDE _ EK 50 L)_ EXPORT (501)	1	Export
15	920083	TAIL LAMP LENSE LH WITH HARDWARE & GASKET	13	
16	920084	TAIL LAMP LENSE RH WITH HARDWARE & GASKET	1	
17	925212	PACKING	1	
18	181746	INDICATOR BULB 12V 10W	2	
19	925581	INDICATOR LIGHT BULB 12V 21W AMBER COLOUR	2	
20	567700	BULB 10/5W (STOP LIGHT)	2	
21	643704R	TAIL LAMP ASSY. LH	1	E - Marked (Export)
22	643705R	TAIL LAMP ASSY. RH	1	E - Marked (Export)
23	925571	CABLE RACK (033200/PGO)	1	
24	016408	SPRING WASHER	1	
26	643616	CABIN LAMP (N.I.)	1	
27	016406	SPRING WASHER	2	
28	20106	HEX NUT M6	2	
29	3056	PLAIN WASHER M6 OD12	2	
30	71633	STOP AND PARKING BULB 12V 10/5 W	1	
31	15727	PAN SELF TAPPING SCREW	2	
32	B023727R	CONTACTOR	1	
33	12546	PLAIN WASHER / MULTI TOOTH LOCK WASHER M5	2	
34	31057	HEX HEAD SCREW M5 X 14 CL 8.8	2	
35	3055	PLAIN WASHER M5	2	

94

Print Date: 27-Mar-2022

PLATE-29
ELECTRICAL DEVICES

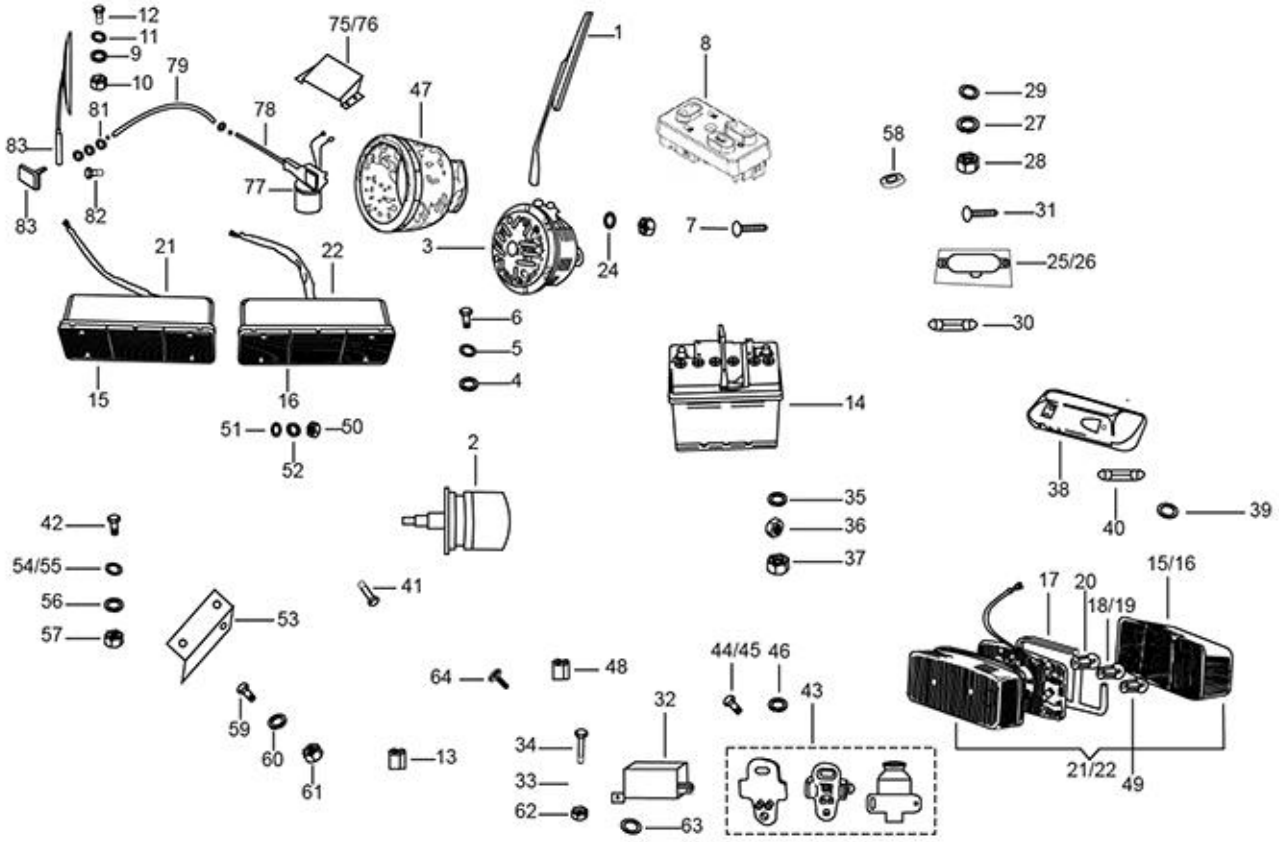
12
11
9
10
79
81
83
83
82
78
77
75/76
47
1
8
29
27
28
58
31
25/26
30
7
3
24
21
22
6
5
4
15
16
14
51
50
52
2
38
40
39
35
36
37
42
54/55
56
57
41
53
17
20
18/19
15/16
64
48
44/45
46
43
32
59
60
61
13
34
33
62
63
21/22
49

95

Print Date: 27-Mar-2022

PLATE-29

ELECTRICAL DEVICES

Fig. No.	Part No.	Description	Qty	Remarks
36	20105	PLAIN NUT M5	2	
37	20108	HEX NUT M8	1	
38	150915R	REGISTRATION PLATE LAMP ASSY	1	E - Marked (Export)
39	12536	SPRING WASHER	1	
40	71633	STOP AND PARKING BULB 12V 10/5 W	1	
41	8451	PAN SELF TP SCREW 6 SGX13 AB	2	
42	31058	HEX HEAD SCREW M5 X 16 CC8.8	2	
43	567498R	BRAKE/REVERSE LIGHT SW (INTEGRAL CAP)-PAV	1	
44	568750	PLAIN RDHD SCREW M4 X 16	2	
45	15996	PHIL RD HD SCREW M4X12	2	
46	003054	PLAIN WASHER	2	
47	645041	HORN PROTECTION	1	
48	567706	FUSE 30 A	1	
49	181747	REVERSE LAMP BULB 12V 5W	2	
50	12136	NUT / NYLOCK NUT M5	2	
51	6078	PLAIN WASHER 12 X 5.2 X 1	2	
52	16405	SPRING WASHER M5	2	
53	660109	FUSE BOX BKT	1	
54	3055	PLAIN WASHER M5	4	
55	6078	PLAIN WASHER 12 X 5.2 X 1	4	
56	6965	SPRING WASHER DIA 5	2	
57	20105	PLAIN NUT M5	2	
58	77055	RING	1	
59	31056	HEX HEAD SCREW M5 X 12 CL. 8.8	2	
60	6965	SPRING WASHER DIA 5	2	
61	20105	PLAIN NUT M5	1	
62	20105	PLAIN NUT M5	1	
63	3055	PLAIN WASHER M5	1	
64	15911	PAN SELF TAP SCREW 8SG X 16 AB	1	
65	925567	GEAR PLATE ASSLY (034500/4)	1	
66	569165	DOME NUT	1	
67	B009290	STRAP ASSY.	1	
68	568714	BATTERY COVER	1	
69	661231	CIRCLIP STEERING LOCK DIA 16 (INT)	1	
70	925584	BULB 12 V 21W CLEAR (PARKING AND INDICATOR)	1	

96

Print Date: 27-Mar-2022

PLATE-29
ELECTRICAL DEVICES

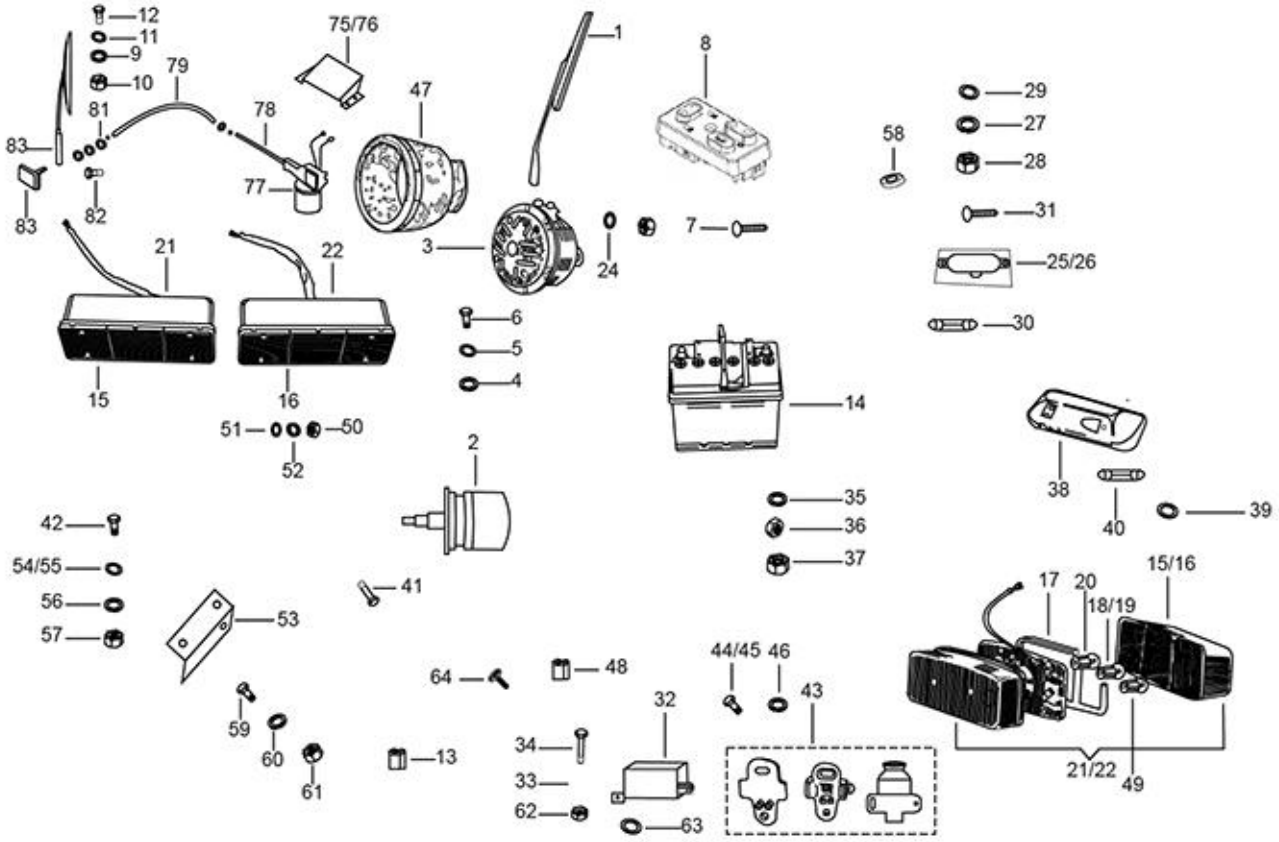
12
11
9
10
79
81
83
83
82
78
77
75/76
47
1
8
29
27
28
58
31
25/26
30
7
3
24
21
22
6
5
4
15
16
14
51
50
52
2
38
40
39
35
36
37
42
54/55
56
57
41
53
17
20
18/19
15/16
64
48
44/45
46
43
32
59
60
61
13
34
33
62
63
21/22
49

97

Print Date: 27-Mar-2022

PLATE-29

ELECTRICAL DEVICES

Fig. No.	Part No.	Description	Qty	Remarks
71	925585	LENS MOUNTING SCREW FOR LATERAL LAMP - NEOLITE MAKE	1	
72	925589	LENSE MOUNTING SCREW (N.I.)	1	
73	925605	TAIL LAMP GLASS - RH (LUMAX)	1	
74	925604	TAIL LAMP GLASS - LH (LUMAX)	1	
75	569166	WIPER MOTOR MOUNTING BRACKET	1	
76	632995	WIPER MOTOR ASSY. WITH MTG. BKT.	1	
77	604506	BUNDY TUBE OUTER	1	
78	632285	BUNDY TUBE (MOTOR TO WHEEL BOX)	1	
79	604506	BUNDY TUBE OUTER	1	
80	569197	WHEEL BOX ASSY. (MOD.)	1	
81	003054	PLAIN WASHER	2	
82	661925	PHILIP PAN HEAD SCREW (M5 X 0.8 X 1.6)	4	
83	925572	BRUSH CARD ASSLY (033300/PGO)	1	

98

Print Date: 27-Mar-2022

PLATE-30
PASSENGER AUTO RICKSHAW BODY

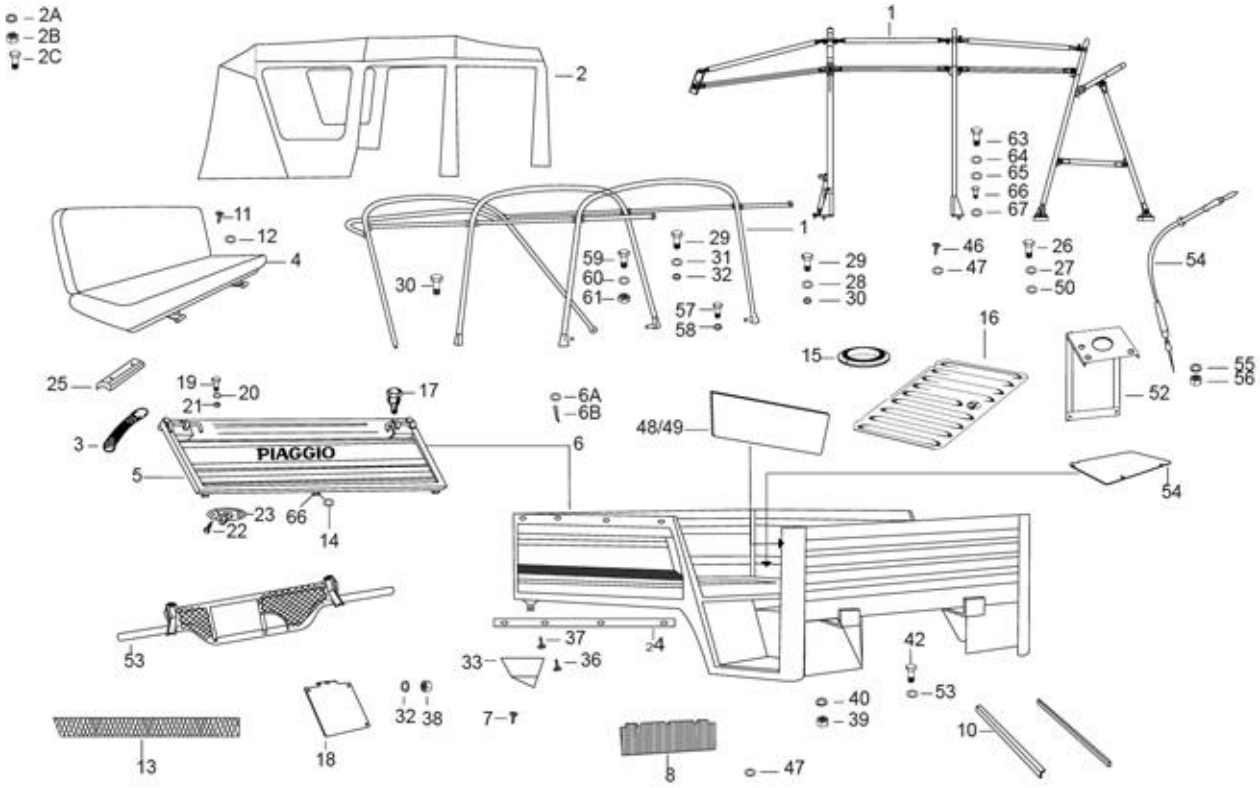
2A
2B
2C
1
2
63
64
65
66
67
11
12
4
1
29
31
32
59
60
61
30
29
28
30
46
47
26
27
50
54
57
58
16
15
25
19
20
21
17
6A
6B
48/49
52
55
56
3
PIAGGIO
6
5
54
23
22
66
14
53
37
24
33
36
42
53
40
39
32
38
7
10
13
18
8
47

99

Print Date: 27-Mar-2022

PLATE-30

PASSENGER AUTO RICKSHAW BODY

Fig. No.	Part No.	Description	Qty	Remarks
1	KIT95058R	HOOD FRAME ASSY. WITH PROFILE 501 BSIII	1	
2	587940	CANVAS (SOFT TOP ASSLY)	1	
2	B075220R	SOFT TOP ASSLY 501	1	BLK 501 REG VA/VE
2	B006789	SOFT TOP ASSLY BLK 501 REG (MAH)	1	
2	B009952	SOFT TOP ASSY. WHITE (MH)	1	
2A	016408	SPRING WASHER	8	
2B	20108	HEX NUT M8	4	
2C	31116	HEX HD. SCREW M8X16	4	
3	587907	BELT,PASSENGER SEAT RETAINER	2	
4	B075444	PASS. SEAT ASSLY (WIRE MESH)	1	
5	B042726ED	REAR HATCH WITH LATCH BOLT PASS DTL-CED	1	
6	B042731BL	PASS BODY WITH TAIL GATE BSIII BLACK DTL	1	
6	B042731GY	PASS BODY WITH TAIL GATE BSIII G YLW DTL	1	
6	B042731WR	PASS BODY WITH TAIL GATE BSIII W RED DTL	1	
6	B042731BW	PASS BODY WITH TAIL GATE BSIII WHITE DTL	1	
6	B042731EG	PASS BODY WITH TAIL GATE BSIII E GRN DTL	1	
6	B0423731GY	PASS BODY WITH TAIL GATE BSIII G YLW DTL	1	
6A	3057	PL. WASHER 13 X 7 X 1	1	
7	9000	SELF TAP SCREW 4 SG X 13 AB3	6	
8	661493	PASSENGER COMPARTMENT CARPET (UPGRADE)	1	
9	013880	PLAIN WASHER	4	
10	587962	PROFILE	2	
11	15996	PHIL RD HD SCREW M4X12	8	
12	003054	PLAIN WASHER	16	
13	661262	YELLOW REFLECTIVE TAPE	1	
14	12138	NYLOCK NUT M6	4	
15	B024501	PLASTIC COVER PLUG-CARGO	1	
16	B076022ED	ENGINE INSPECTION DOOR 3W BSIV- CED	1	
17	567732	BUFFER	2	
18	643661	LICENSE PLATE MTG. BKT.	1	
19	31119	HEX HD SCREW M8 X 25	2	
20	3058	PLAIN WASHER 15X8.4X1.5	2	
21	016408	SPRING WASHER	2	
22	8432	SCREW	14	
23	587948	BKT. FOR HANDLE (N.I.)	7	

100

Print Date: 27-Mar-2022

PLATE-30
PASSENGER AUTO RICKSHAW BODY

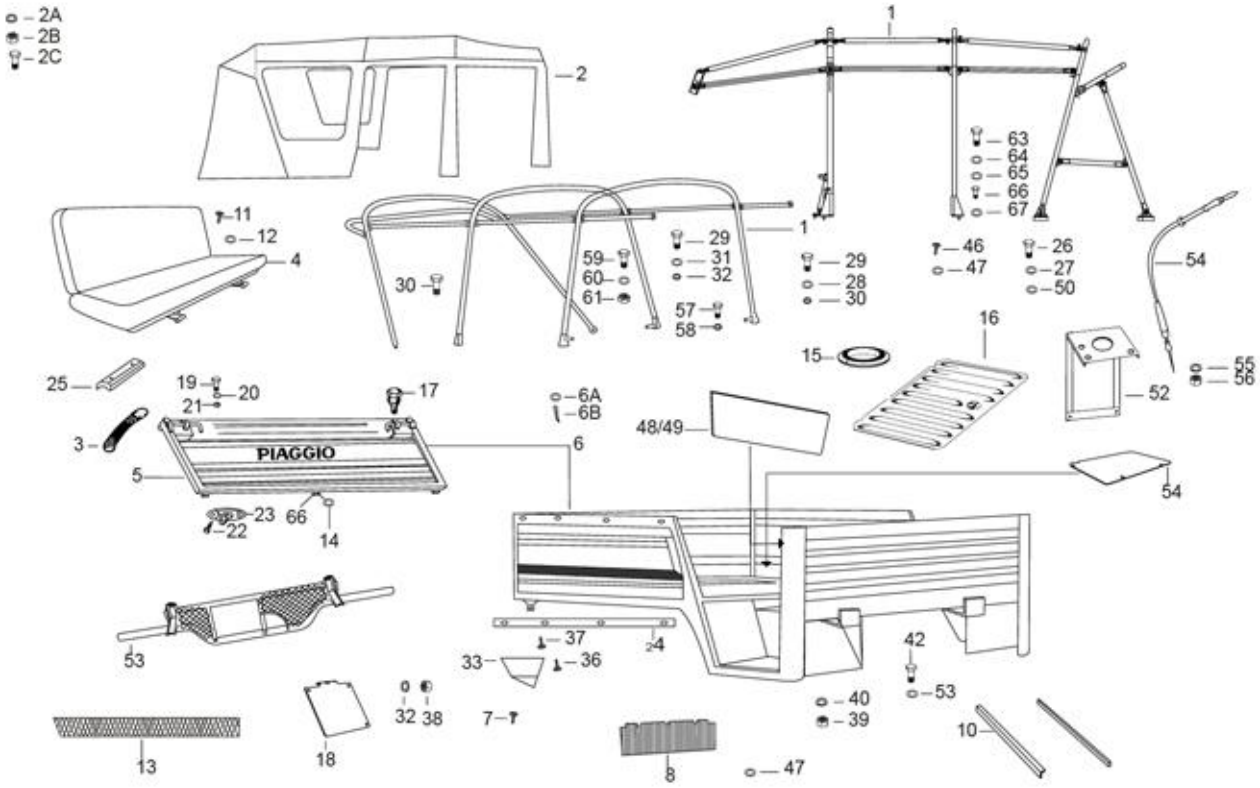
2A
2B
2C
1
2
63
64
65
66
67
11
12
4
1
29
31
32
59
60
61
30
29
28
30
46
47
26
27
50
54
57
58
16
15
25
19
20
21
17
6A
6B
48/49
52
55
56
3
PIAGGIO
6
5
54
23
22
66
14
53
37
24
33
36
42
53
40
39
32
38
7
10
13
18
8
47

101

Print Date: 27-Mar-2022

PLATE-30

PASSENGER AUTO RICKSHAW BODY

Fig. No.	Part No.	Description	Qty	Remarks
24	643752	LATERAL PROFILE FOR COVER	1	
25	568275	RUBBER STOP	4	
26	31118	SCREW M8X20	4	
27	3058	PLAIN WASHER 15X8.4X1.5	4	
28	016408	SPRING WASHER	4	
29	31088	HEX HD SCREW M6 X 16 CL 8.8 (811061623)	14	
30	031090	HEXAGONAL SCREW	2	
31	3056	PLAIN WASHER M6 OD12	32	
32	016406	SPRING WASHER	18	
33	B073274	REAR PANEL RH (PLASTIC)	1	
34	20106	HEX NUT M6	1	
35	B073275	REAR PANEL LH (PLASTIC)	1	
36	15911	PAN SELF TAP SCREW 8SG X 16 AB	12	
37	14628	CSK SELF TP.SCREW 6SG X 16 AB	28	
38	20106	HEX NUT M6	2	
39	20104	HEX NUT M4	8	
40	016404	SPRING WASHER M4	8	
41	643502	LOCK SET WITH KEYS (PASS) (COMMON KEY)	1	
42	15900	HEAD LAMP SECURING SCREW/PAN SELF TAP SCREW	8	
43	3056	PLAIN WASHER M6 OD12	4	
44	31092	HEX. HD SCREW M6X25	4	
45	20108	HEX NUT M8	2	
46	15911	PAN SELF TAP SCREW 8SG X 16 AB	8	
47	16670	PLAIN WASHER 12X4.5X1	8	
48	567534	RIGHT FABRIC PROTECTION	1	
49	567535	LEFT FABRIC PROTECTION	1	
50	16670	PLAIN WASHER 12X4.5X1	8	
51	B009701	PASS. SPACE REAR CARPET (V.E)	1	
52	568325	SUPPORT PLATE S/A FAREMETER	1	
53	643670	REAR VISUAL BARRIER ASSLY (VE)	1	
54	568107	FAREMETER CABLE ASSY (N.I.)	1	
55	016408	SPRING WASHER	2	
56	20108	HEX NUT M8	4	
57	30074	HEX HEAD BOLT M8 X 40 CL 8.8	2	
58	016408	SPRING WASHER	2	

102

Print Date: 27-Mar-2022

PLATE-30
PASSENGER AUTO RICKSHAW BODY

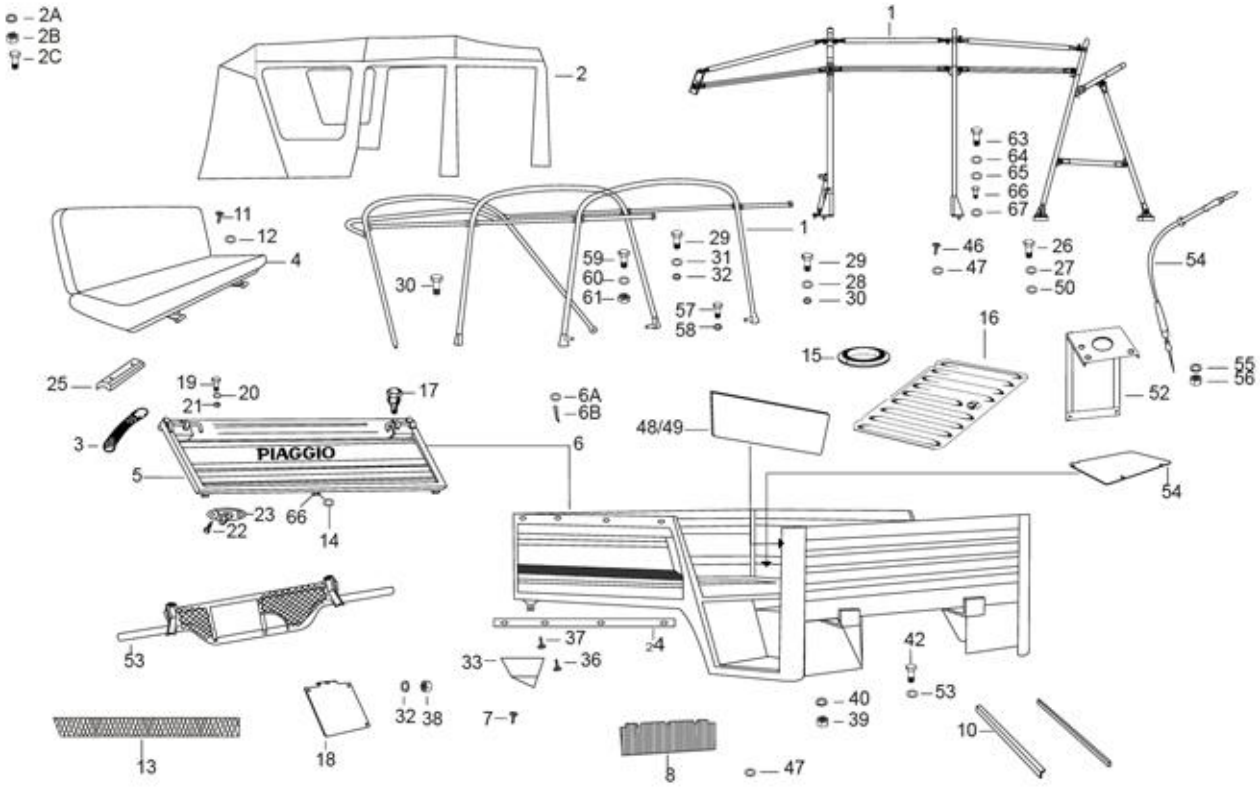
2A
2B
2C
1
2
63
64
65
66
67
11
12
4
1
29
31
32
59
60
61
30
29
28
30
46
47
26
27
50
54
57
58
16
15
25
19
20
21
17
6A
6B
48/49
52
55
56
3
PIAGGIO
6
5
54
23
22
66
14
53
37
24
33
36
42
53
40
39
32
38
7
10
13
18
8
47

103

Print Date: 27-Mar-2022

PLATE-30

PASSENGER AUTO RICKSHAW BODY

Fig. No.	Part No.	Description	Qty	Remarks
59	31116	HEX HD. SCREW M8X16	2	
60	016408	SPRING WASHER	2	
61	20108	HEX NUT M8	2	
62	30074	HEX HEAD BOLT M8 X 40 CL 8.8	2	
63	14628	CSK SELF TP.SCREW 6SG X 16 AB	28	
64	3058	PLAIN WASHER 15X8.4X1.5	2	
65	568135	WASHER(NI PLATED)	10	
66	8432	SCREW	49	
67	97756	METALLIC PLAIN WASHER	39	
68	31089	HEX HEAD SCREW M6X18 CL 8.8	2	

104

Print Date: 27-Mar-2022

PLATE-31
CABLE HARNESS

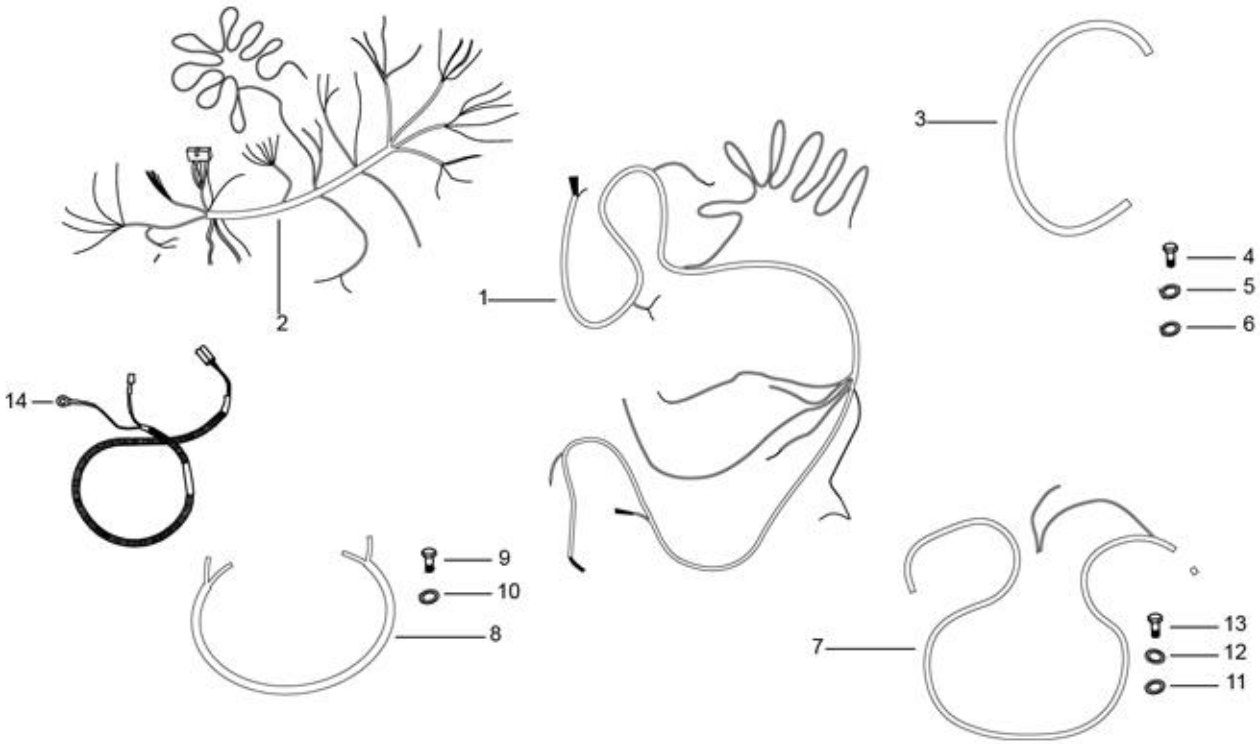
1
2
3
4
5
6
7
8
9
10
11
12
13
14

105

Print Date: 27-Mar-2022

PLATE-31

CABLE HARNESS

Fig. No.	Part No.	Description	Qty	Remarks
1	661482	WIRING HARNESS FRAME (FOR S.S.SW)	1	
1	6D000246	WIRING HARNESS, MAIN	1	FOR PUSH BUTTON_HBS
2	B002510R	WHS INST PANEL(IG SW WITH COUPLER)-VISON	1	
3	644838R	BATTERY CABLE -VE	1	
4	31088	HEX HD SCREW M6 X 16 CL 8.8 (811061623)	1	
5	3056	PLAIN WASHER M6 OD12	1	
6	016406	SPRING WASHER	1	
7	644837R	BATTERY CABLE +VE	1	
8	567484	STARTER CABLE GROUP	1	
9	31116	HEX HD. SCREW M8X16	1	
10	3058	PLAIN WASHER 15X8.4X1.5	1	
11	016406	SPRING WASHER	1	
12	3056	PLAIN WASHER M6 OD12	1	
13	31088	HEX HD SCREW M6 X 16 CL 8.8 (811061623)	1	
14	B073320R	PIG TAIL- CABIN LAMP (NEW)-PASSENGER	1	

106

Print Date: 27-Mar-2022

PLATE-32

FRONT BRAKE ASSEMBLY SELF ADJUSTING (DIA 180 X 40 MM)

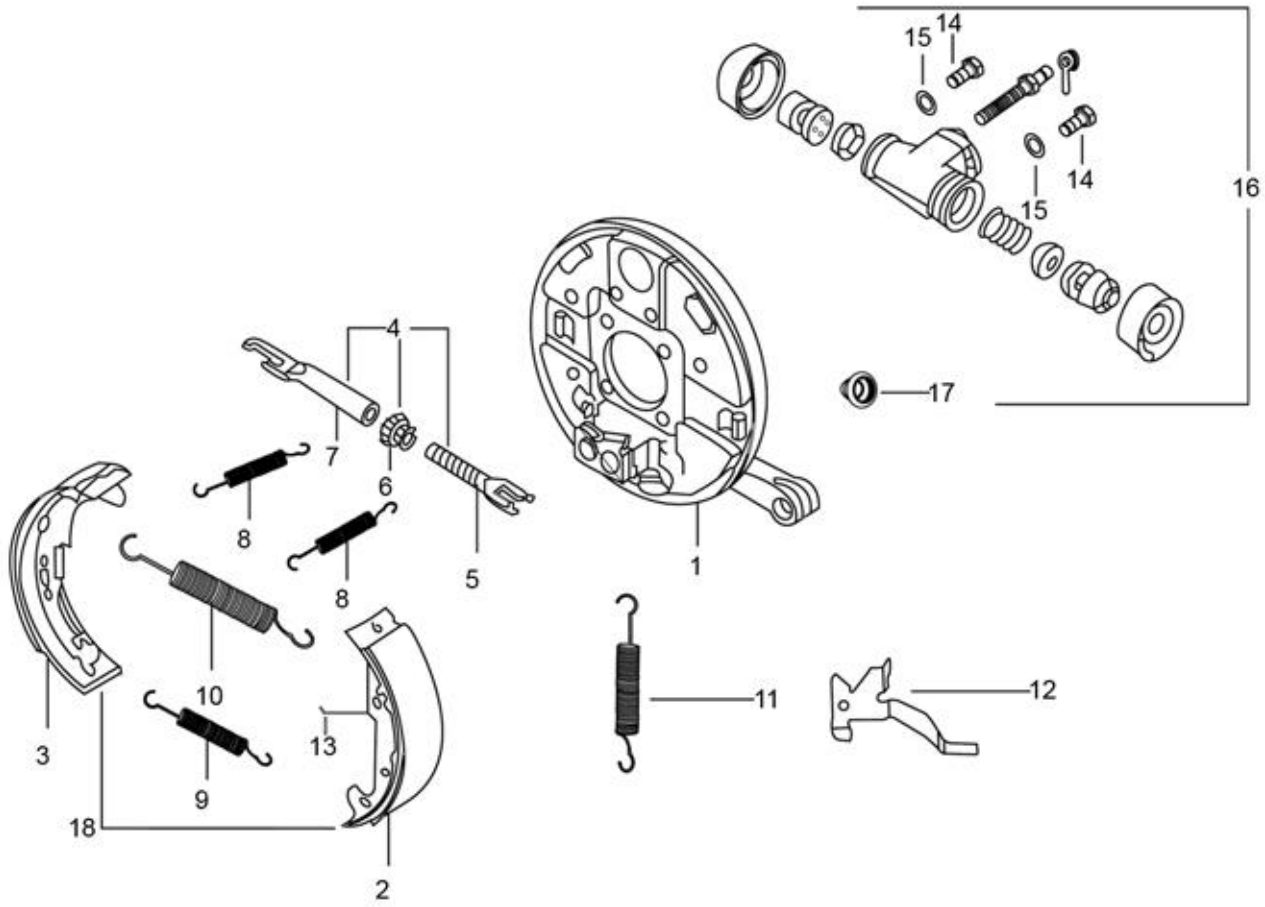
15
14
14
15
16
4
17
7
6
8
8
5
1
10
11
12
3
13
9
18
2

107

Print Date: 27-Mar-2022

PLATE-32

FRONT BRAKE ASSEMBLY SELF ADJUSTING (DIA 180 X 40 MM)

Fig. No.	Part No.	Description	Qty	Remarks
1	616541	BRACKET WHEEL CARRIER WITH PI	1	
2	B003784	LEADING SHOE COMP WITH PIN LH ANL 1643	1	
3	940004	FRONT BRAKE SHOE KIT COMPRISING OF 2 & 3	1	
4	179056	FORK ASSY LH	1	
5	178804	FORK FOR LH WHEEL	1	
6	178805	LH - GEAR	1	
7	178806	LH STRUT	1	
8	602497	JAWS STOP SPRINGS	2	
9	116088	SPRING SUPPORTING JAWS	1	
10	245038	SHOE RETURN SPRING	1	
11	178808	SPRING LEVER RETURN	1	
12	178807	LEVER LH	1	
13	178823	JUMPER LH	1	
13	178824	JUMPER	1	
14	63440	BOLT M6X12	2	
15	12536	SPRING WASHER	2	
16	587616	BRAKE CYLINDER FR ASSLY (DIA. 22.225)	1	
17	925501	CAP (KBX P 6450225)	1	
18	940004	FRONT BRAKE SHOE KIT COMPRISING OF 2 & 3	1	
19	925521	MINOR KIT WHEEL CYL. FRT (KBX 1007)	1	

108

Print Date: 27-Mar-2022

PLATE-33

REAR BRAKE ASSEMBLY SELF ADJUSTING (DIA 180 X 40 MM)

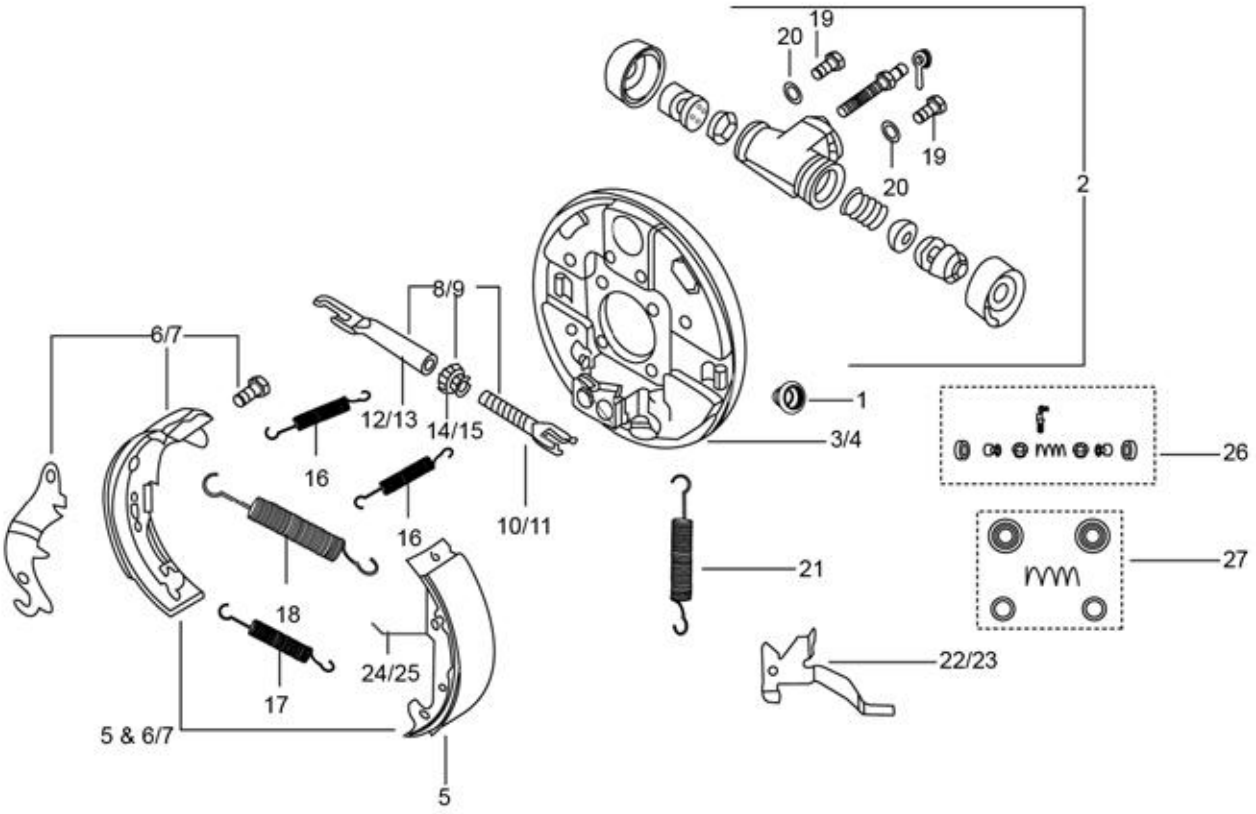
19
20
19
20
2
8/9
6/7
1
12/13
14/15
3/4
26
16
16
10/11
21
27
18
24/25
22/23
17
5 & 6/7
5

109

Print Date: 27-Mar-2022

PLATE-33

REAR BRAKE ASSEMBLY SELF ADJUSTING (DIA 180 X 40 MM)

Fig. No.	Part No.	Description	Qty	Remarks
1	925501	CAP (KBX P 6450225)	1	
2	632148	WHEEL CYLINDER ASSY. FRONT DIA. (25.4 MM)	1	
2	632148	WHEEL CYLINDER ASSY. FRONT DIA. (25.4 MM)	1	
3	602120	LEFT BRAKE JAW HOLDING CABLE PLATE	1	
4	602123	RIGHT BRAKE JAW HOLDING CABLE PLATE	1	
5	B003784	LEADING SHOE COMP WITH PIN LH ANL 1643	1	
6	940005	REAR BRAKE SHOE SET L/H COMPRISING OF 5 & 7	1	
7	940006	REAR BRAKE SHOE SET R/H. COMPRISING OF 5 & 8	1	
8	179056	FORK ASSY LH	1	
9	179057	FORK ASSY. RH	1	
10	178804	FORK FOR LH WHEEL	1	
11	178818	RH FORK	1	
12	178806	LH STRUT	1	
13	178820	RH STRUT	1	
14	178805	LH - GEAR	1	
15	178819	RH GEAR	1	
16	602497	JAWS STOP SPRINGS	2	
17	116088	SPRING SUPPORTING JAWS	1	
18	245038	SHOE RETURN SPRING	1	
19	63440	BOLT M6X12	2	
20	12536	SPRING WASHER	2	
21	178808	SPRING LEVER RETURN	1	
22	178807	LEVER LH	1	
23	178821	LEVER RH	1	
24	178823	JUMPER LH	1	
25	178824	JUMPER	1	
26	925573	MAJOR KIT	1	
27	925574	MINOR KIT WHL CYL. RR	1	
28	940005	REAR BRAKE SHOE SET L/H COMPRISING OF 5 & 7	1	
29	940006	REAR BRAKE SHOE SET R/H. COMPRISING OF 5 & 8	1	

110

Print Date: 27-Mar-2022

PARTS INDEX

Ape Xtra Passenger DSL_BSII_BSIII

111

Print Date: 27-Mar-2022

PART NO	BLOCK	PART NO	BLOCK	PART NO	BLOCK
003054	PLATE-28	016408	PLATE-13	116103	PLATE-21
003054	PLATE-28	016408	PLATE-13	117401	PLATE-16
003054	PLATE-29	016408	PLATE-16	117402	PLATE-16
003054	PLATE-29	016408	PLATE-16	117404	PLATE-16
003054	PLATE-30	016408	PLATE-18	118447	PLATE-19
003054	PLATE-16	016408	PLATE-18	118806	PLATE-26
003054	PLATE-20	016408	PLATE-18	119181	PLATE-26
003054	PLATE-21	016408	PLATE-19	119278	PLATE-26
003054	PLATE-22	016408	PLATE-19	119278	PLATE-27
013880	PLATE-30	016408	PLATE-22	119278	PLATE-16
013880	PLATE-12	031090	PLATE-30	119735	PLATE-28
013880	PLATE-19	031090	PLATE-12	119928	PLATE-26
013880	PLATE-21	105392	PLATE-19	119975	PLATE-28
013880	PLATE-21	107718	PLATE-25	120159014	PLATE-17
016404	PLATE-28	107732	PLATE-25	120164019	PLATE-17
016404	PLATE-30	107827	PLATE-24	120170018	PLATE-17
016404	PLATE-16	107870	PLATE-24	120203011	PLATE-16
016406	PLATE-26	107870	PLATE-25	120204015R	PLATE-14
016406	PLATE-29	107871	PLATE-25	120205019	PLATE-14
016406	PLATE-29	108215	PLATE-24	120212012	PLATE-13
016406	PLATE-30	108215	PLATE-25	120238016	PLATE-17
016406	PLATE-31	108785	PLATE-27	120271018	PLATE-13
016406	PLATE-31	108873	PLATE-25	120321019	PLATE-16
016406	PLATE-12	108874	PLATE-25	12136	PLATE-29
016406	PLATE-12	109012	PLATE-19	12136	PLATE-13
016406	PLATE-15	109064	PLATE-25	12138	PLATE-26
016406	PLATE-16	109066	PLATE-25	12138	PLATE-30
016406	PLATE-16	109117	PLATE-25	122032014	PLATE-14
016406	PLATE-17	109227	PLATE-26	124102019	PLATE-16
016406	PLATE-19	109265	PLATE-25	124112014	PLATE-16
016406	PLATE-21	109404	PLATE-26	124113018	PLATE-16
016408	PLATE-27	109635	PLATE-26	124121015	PLATE-16
016408	PLATE-27	109775	PLATE-26	124141015R	PLATE-16
016408	PLATE-27	109892	PLATE-24	125012015	PLATE-16
016408	PLATE-29	111353	PLATE-16	125181	PLATE-26
016408	PLATE-29	111356	PLATE-16	125289	PLATE-25
016408	PLATE-30	111498	PLATE-16	12536	PLATE-29
016408	PLATE-30	112867R	PLATE-16	12536	PLATE-32
016408	PLATE-30	112898	PLATE-16	12536	PLATE-33
016408	PLATE-30	113278	PLATE-16	12540	PLATE-22
016408	PLATE-30	114121	PLATE-28	12540	PLATE-22
016408	PLATE-30	116088	PLATE-32	125411	PLATE-27
016408	PLATE-8	116088	PLATE-33	12546	PLATE-29

112

Print Date: 27-Mar-2022

PART NO	BLOCK	PART NO	BLOCK	PART NO	BLOCK
125998	PLATE-19	127641016	PLATE-15	14034	PLATE-22
125998	PLATE-19	127691011	PLATE-17	140728	PLATE-27
126003011	PLATE-15	127692015	PLATE-17	1413453025	PLATE-8
126004015	PLATE-15	127693019	PLATE-17	141925	PLATE-26
126021013	PLATE-15	127730013SP	PLATE-17	142424	PLATE-22
126022017	PLATE-15	127740018	PLATE-17	142425	PLATE-22
126052012	PLATE-15	127741012	PLATE-17	14628	PLATE-30
126053016	PLATE-15	127753015	PLATE-17	14628	PLATE-30
126054010	PLATE-15	127754019	PLATE-17	14628	PLATE-22
126060019	PLATE-15	127755013	PLATE-17	150041R	PLATE-28
126902	PLATE-26	127757011	PLATE-17	150579	PLATE-25
127012019	PLATE-17	127758015	PLATE-17	150915R	PLATE-29
127013013	PLATE-17	127759019R	PLATE-17	151924	PLATE-23
127016015	PLATE-16	127911019	PLATE-13	152580	PLATE-24
127101016	PLATE-13	127912013	PLATE-13	152580	PLATE-25
127102010	PLATE-13	127927R	PLATE-25	15335	PLATE-13
127103014	PLATE-16	128009	PLATE-19	15335	PLATE-13
127109018	PLATE-13	128010	PLATE-19	15335	PLATE-16
127111011	PLATE-16	128071012	PLATE-13	15335	PLATE-18
127121016	PLATE-16	128081017	PLATE-15	15478	PLATE-26
127141016	PLATE-16	128306015	PLATE-16	15478	PLATE-18
127171011	PLATE-13	128307019	PLATE-16	15594	PLATE-24
127171310	PLATE-13	128633	PLATE-24	15640	PLATE-29
127179	PLATE-28	129001014	PLATE-13	15641	PLATE-28
127182010	PLATE-17	129011019	PLATE-17	157103	PLATE-24
127185012	PLATE-17	129012013	PLATE-17	15727	PLATE-28
127203010R	PLATE-14	129015015	PLATE-17	15727	PLATE-29
127290013	PLATE-17	129019011R	PLATE-17	15727	PLATE-21
127302517R	PLATE-14	132129	PLATE-16	157716	PLATE-21
127303016R	PLATE-14	132134	PLATE-16	15900	PLATE-28
127306513R	PLATE-14	132244	PLATE-16	15900	PLATE-28
127309515R	PLATE-14	136426	PLATE-24	15900	PLATE-28
127404016R	PLATE-16	136434	PLATE-25	15900	PLATE-30
127451019R	PLATE-14	136451R	PLATE-24	15911	PLATE-29
127451	PLATE-26	136916	PLATE-18	15911	PLATE-30
127460010	PLATE-17	137026	PLATE-24	15911	PLATE-30
127471019	PLATE-17	137026	PLATE-24	15911	PLATE-18
127501010	PLATE-16	137235	PLATE-25	15911	PLATE-20
127530011	PLATE-17	13812	PLATE-27	15911	PLATE-22
127555016	PLATE-16	138237	PLATE-27	15911	PLATE-22
127571015R	PLATE-16	13861	PLATE-8	15996	PLATE-29
12761	PLATE-27	13861	PLATE-19	15996	PLATE-30
127640012	PLATE-15	13861	PLATE-22	16319	PLATE-26

113

Print Date: 27-Mar-2022

PART NO	BLOCK	PART NO	BLOCK	PART NO	BLOCK
16405	PLATE-29	178824	PLATE-33	20105	PLATE-29
16405	PLATE-18	179056	PLATE-32	20105	PLATE-29
16405	PLATE-19	179056	PLATE-33	20105	PLATE-16
16405	PLATE-19	179057	PLATE-33	20105	PLATE-18
16405	PLATE-19	180431	PLATE-25	20105	PLATE-19
16405	PLATE-22	181746	PLATE-29	20105	PLATE-22
16405	PLATE-22	181747	PLATE-29	20106	PLATE-26
16410	PLATE-25	183138R	PLATE-21	20106	PLATE-29
16410	PLATE-26	18630	PLATE-21	20106	PLATE-29
16410	PLATE-16	190255	PLATE-19	20106	PLATE-30
16410	PLATE-18	190255	PLATE-19	20106	PLATE-30
16410	PLATE-18	190393	PLATE-22	20106	PLATE-12
16410	PLATE-24	190462	PLATE-22	20106	PLATE-12
16410	PLATE-24	190462	PLATE-22	20106	PLATE-17
164906	PLATE-26	190465	PLATE-22	20106	PLATE-17
165121014	PLATE-16	190479	PLATE-22	20106	PLATE-21
165121014	PLATE-16	192020017	PLATE-23	20106	PLATE-21
16603	PLATE-19	196302	PLATE-24	20108	PLATE-27
16603	PLATE-22	197071	PLATE-26	20108	PLATE-27
16620	PLATE-26	197071	PLATE-26	20108	PLATE-29
16626	PLATE-26	1A000236	PLATE-16	20108	PLATE-30
16670	PLATE-30	1A000612	PLATE-16	20108	PLATE-30
16670	PLATE-30	1A000817	PLATE-16	20108	PLATE-30
16670	PLATE-20	1A000826	PLATE-16	20108	PLATE-30
17702	PLATE-16	1A004807	PLATE-16	20108	PLATE-8
178610	PLATE-18	1A004807	PLATE-16	20108	PLATE-16
178804	PLATE-32	1A005176	PLATE-16	20108	PLATE-16
178804	PLATE-33	1A009926	PLATE-16	20108	PLATE-18
178805	PLATE-32	1A010094	PLATE-13	20108	PLATE-18
178805	PLATE-33	1A010139	PLATE-16	20108	PLATE-18
178806	PLATE-32	1A011662	PLATE-17	20108	PLATE-19
178806	PLATE-33	1A011778	PLATE-16	20108	PLATE-21
178807	PLATE-32	1A011810	PLATE-16	20108	PLATE-22
178807	PLATE-33	1A014592	PLATE-16	20108	PLATE-22
178808	PLATE-32	1A016604	PLATE-13	20110	PLATE-25
178808	PLATE-33	20104	PLATE-28	20110	PLATE-26
178818	PLATE-33	20104	PLATE-30	20110	PLATE-18
178819	PLATE-33	20104	PLATE-16	20110	PLATE-18
178820	PLATE-33	20104	PLATE-22	20110	PLATE-24
178821	PLATE-33	20105	PLATE-26	20359	PLATE-24
178823	PLATE-32	20105	PLATE-27	21216	PLATE-25
178823	PLATE-33	20105	PLATE-29	219528	PLATE-28
178824	PLATE-32	20105	PLATE-29	220575	PLATE-16

114

Print Date: 27-Mar-2022

PART NO	BLOCK	PART NO	BLOCK	PART NO	BLOCK
226596	PLATE-24	30074	PLATE-30	31088	PLATE-30
226661	PLATE-24	30077	PLATE-26	31088	PLATE-31
226662	PLATE-24	30103	PLATE-26	31088	PLATE-31
229524	PLATE-27	30209R	PLATE-14	31088	PLATE-16
230560	PLATE-12	30209R	PLATE-25	31088	PLATE-16
231370	PLATE-16	3055	PLATE-28	31088	PLATE-19
231370	PLATE-18	3055	PLATE-29	31088	PLATE-21
231370	PLATE-18	3055	PLATE-29	31089	PLATE-26
231370	PLATE-24	3055	PLATE-29	31089	PLATE-30
231370	PLATE-24	3055	PLATE-18	31089	PLATE-21
231370	PLATE-24	3055	PLATE-18	31092	PLATE-30
237246	PLATE-24	3055	PLATE-22	31092	PLATE-16
2383	PLATE-18	3055	PLATE-22	31092	PLATE-17
2430136166	PLATE-9	3056	PLATE-28	31092	PLATE-21
2430136166	PLATE-9	3056	PLATE-29	31116	PLATE-29
243303R	PLATE-24	3056	PLATE-29	31116	PLATE-30
2433124388	PLATE-9	3056	PLATE-30	31116	PLATE-30
2434614030	PLATE-9	3056	PLATE-30	31116	PLATE-31
2438	PLATE-26	3056	PLATE-31	31116	PLATE-18
245038	PLATE-32	3056	PLATE-31	31118	PLATE-27
245038	PLATE-33	3056	PLATE-12	31118	PLATE-30
265091	PLATE-18	3056	PLATE-15	31118	PLATE-18
267064	PLATE-24	3056	PLATE-16	31119	PLATE-30
267065	PLATE-18	3056	PLATE-16	31119	PLATE-18
267065	PLATE-24	3056	PLATE-17	31119	PLATE-19
267068	PLATE-24	3057	PLATE-30	31122	PLATE-27
272178	PLATE-18	3058	PLATE-27	31154	PLATE-18
272178	PLATE-18	3058	PLATE-29	31159	PLATE-18
286328	PLATE-18	3058	PLATE-30	31159	PLATE-24
286328	PLATE-18	3058	PLATE-30	3418700004	PLATE-9
286328	PLATE-18	3058	PLATE-30	414948	PLATE-22
286328	PLATE-24	3058	PLATE-31	48197	PLATE-25
288730	PLATE-16	3058	PLATE-18	520221019R	PLATE-13
2911161261	PLATE-8	3058	PLATE-19	523011013R	PLATE-14
2911232700	PLATE-9	3058	PLATE-21	523012017	PLATE-14
2916710602	PLATE-8	3068	PLATE-24	523014015	PLATE-14
2916710603	PLATE-8	31054	PLATE-19	523021018	PLATE-14
2916710603	PLATE-9	31056	PLATE-29	566545	PLATE-25
30072	PLATE-8	31057	PLATE-29	567454	PLATE-23
30072	PLATE-19	31058	PLATE-29	567455	PLATE-23
30072	PLATE-22	31058	PLATE-22	567456	PLATE-23
30072	PLATE-22	31088	PLATE-28	567457	PLATE-23
30074	PLATE-30	31088	PLATE-29	567458	PLATE-23

115

Print Date: 27-Mar-2022

PART NO	BLOCK	PART NO	BLOCK	PART NO	BLOCK
567459	PLATE-23	568689	PLATE-18	587919	PLATE-26
567461	PLATE-27	568702	PLATE-21	587928	PLATE-27
567473	PLATE-25	568703	PLATE-21	587940	PLATE-30
567484	PLATE-31	568714	PLATE-29	587948	PLATE-30
567498R	PLATE-29	568737	PLATE-27	587961	PLATE-22
567520	PLATE-21	568741	PLATE-22	587962	PLATE-30
567524	PLATE-18	568750	PLATE-29	587962	PLATE-22
567534	PLATE-30	569041	PLATE-12	587963	PLATE-19
567535	PLATE-30	569150	PLATE-25	587969	PLATE-21
567562	PLATE-19	569165	PLATE-29	587971	PLATE-23
567593	PLATE-28	569166	PLATE-29	587974R	PLATE-28
567690	PLATE-27	569182	PLATE-18	587974R	PLATE-20
567700	PLATE-29	569197	PLATE-29	5969	PLATE-27
567706	PLATE-29	569244	PLATE-18	6018	PLATE-23
567719	PLATE-27	569246R	PLATE-25	602120	PLATE-33
567732	PLATE-30	569255	PLATE-25	602120	PLATE-24
567741	PLATE-13	569377	PLATE-18	602123	PLATE-33
567741	PLATE-17	587533	PLATE-18	602123	PLATE-24
567746G1	PLATE-27	587616	PLATE-32	602497	PLATE-32
567878R	PLATE-19	587617	PLATE-24	602497	PLATE-33
567893	PLATE-20	587628	PLATE-26	604502	PLATE-27
567898	PLATE-27	587631	PLATE-26	604506	PLATE-29
567899	PLATE-27	587633	PLATE-27	604506	PLATE-29
567920	PLATE-27	587650R	PLATE-29	604508	PLATE-26
567990	PLATE-25	587662	PLATE-22	604509	PLATE-26
567991	PLATE-25	587670R	PLATE-28	604515	PLATE-26
567992	PLATE-25	587670R	PLATE-20	604535	PLATE-24
567993	PLATE-25	587671R	PLATE-11	604553	PLATE-12
568095	PLATE-25	587685	PLATE-16	604557	PLATE-29
568107	PLATE-30	587687	PLATE-16	604560	PLATE-15
568131	PLATE-19	587702	PLATE-27	604560	PLATE-16
568131	PLATE-21	587763	PLATE-19	604603	PLATE-22
568135	PLATE-30	587773	PLATE-27	604606	PLATE-18
568135	PLATE-22	587802	PLATE-26	604606	PLATE-19
568140	PLATE-18	587803	PLATE-26	604615	PLATE-27
568154	PLATE-19	587806	PLATE-26	604691	PLATE-21
568161	PLATE-27	587812	PLATE-26	604707	PLATE-23
568260	PLATE-18	587822	PLATE-27	604715	PLATE-26
568275	PLATE-30	587829	PLATE-25	604716	PLATE-26
568289	PLATE-24	587849	PLATE-19	604717	PLATE-27
568325	PLATE-30	587902	PLATE-26	604750	PLATE-12
568671	PLATE-20	587904	PLATE-26	604756	PLATE-12
568682	PLATE-19	587907	PLATE-30	604758	PLATE-25

116

Print Date: 27-Mar-2022

PART NO	BLOCK	PART NO	BLOCK	PART NO	BLOCK
604758	PLATE-25	63440	PLATE-32	660153	PLATE-25
604759	PLATE-25	63440	PLATE-33	660168	PLATE-20
604760	PLATE-27	6411	PLATE-27	660351	PLATE-26
604779	PLATE-26	6414	PLATE-27	660498SP	PLATE-25
604948	PLATE-18	643502	PLATE-28	660499SP	PLATE-25
604954	PLATE-21	643502	PLATE-30	660826R	PLATE-28
604973	PLATE-12	643616	PLATE-29	660826R	PLATE-20
604984	PLATE-20	643661	PLATE-30	660931	PLATE-24
605389	PLATE-20	643670	PLATE-30	660931	PLATE-25
60565	PLATE-26	643684R	PLATE-22	661231	PLATE-25
6066	PLATE-25	643685R	PLATE-22	661231	PLATE-29
6066	PLATE-24	643691	PLATE-20	661262	PLATE-30
6078	PLATE-29	643692	PLATE-18	661267	PLATE-24
6078	PLATE-29	643704R	PLATE-29	661282	PLATE-24
6078	PLATE-18	643705R	PLATE-29	661482	PLATE-31
6078	PLATE-18	643711R	PLATE-18	661493	PLATE-30
6078	PLATE-22	643741	PLATE-24	661510R	PLATE-28
611620	PLATE-12	643752	PLATE-30	661510R	PLATE-20
611621	PLATE-12	643772R	PLATE-25	661627	PLATE-19
6125	PLATE-26	643776	PLATE-19	661627	PLATE-19
616541	PLATE-25	644812	PLATE-27	661634	PLATE-22
616541	PLATE-32	644812	PLATE-18	661635	PLATE-22
6173	PLATE-27	644813	PLATE-27	661925	PLATE-28
6173	PLATE-27	644813	PLATE-18	661925	PLATE-29
632148	PLATE-33	644814R	PLATE-25	6650	PLATE-24
632148	PLATE-33	644814R	PLATE-18	6733	PLATE-25
632158	PLATE-26	644837R	PLATE-31	6965	PLATE-29
632247	PLATE-18	644838R	PLATE-31	6965	PLATE-29
632285	PLATE-29	644839R	PLATE-18	6A001046R	PLATE-26
632292	PLATE-29	644973R	PLATE-23	6C000016	PLATE-16
632299	PLATE-18	645041	PLATE-29	6C000041	PLATE-16
632412	PLATE-12	6450	PLATE-16	6C000060	PLATE-24
632413	PLATE-12	645124	PLATE-26	6C000190	PLATE-25
632425	PLATE-12	645141	PLATE-22	6C000191	PLATE-25
632426	PLATE-12	645153R	PLATE-28	6C000312R	PLATE-16
632427	PLATE-12	652112	PLATE-17	6C000362	PLATE-24
632428	PLATE-12	652124	PLATE-17	6C000363	PLATE-24
632477R	PLATE-28	652520	PLATE-24	6C000382	PLATE-18
632478R	PLATE-28	652520	PLATE-25	6C000662	PLATE-24
632508	PLATE-21	652521	PLATE-25	6D000246	PLATE-31
632995	PLATE-29	659842	PLATE-13	7066R	PLATE-16
632995	PLATE-29	660109	PLATE-29	71633	PLATE-28
632997	PLATE-19	660141	PLATE-26	71633	PLATE-29

117

Print Date: 27-Mar-2022

PART NO	BLOCK	PART NO	BLOCK	PART NO	BLOCK
71633	PLATE-29	8432	PLATE-30	925598	PLATE-28
74414	PLATE-25	8432	PLATE-30	925604	PLATE-29
74414	PLATE-24	8432	PLATE-22	925605	PLATE-29
74521	PLATE-25	8451	PLATE-29	925888	PLATE-19
75708	PLATE-25	87067	PLATE-25	940004	PLATE-32
7608	PLATE-26	8771	PLATE-25	940004	PLATE-32
76227	PLATE-22	880255211R	PLATE-14	940005	PLATE-33
77055	PLATE-29	880305509R	PLATE-16	940005	PLATE-33
78307	PLATE-21	884222808	PLATE-14	940006	PLATE-33
79375	PLATE-12	888472578	PLATE-16	940006	PLATE-33
807000647	PLATE-13	9000	PLATE-30	9411033412	PLATE-8
808000826	PLATE-13	920083	PLATE-29	9411033412	PLATE-8
808000826	PLATE-13	920084	PLATE-29	97756	PLATE-26
808000826	PLATE-16	920085	PLATE-12	97756	PLATE-30
808000826	PLATE-16	920086	PLATE-12	B001386	PLATE-19
8080	PLATE-28	920087	PLATE-12	B001501	PLATE-13
8080	PLATE-20	920088	PLATE-12	B001503	PLATE-28
811051525	PLATE-16	920102	PLATE-12	B001505	PLATE-26
811081025	PLATE-13	920105	PLATE-12	B001648	PLATE-18
812061656	PLATE-13	925212	PLATE-29	B001844	PLATE-13
815064025	PLATE-13	925501	PLATE-32	B001912BL	PLATE-19
822031942	PLATE-16	925501	PLATE-33	B001912BW	PLATE-19
822031942	PLATE-17	925508	PLATE-27	B001912CB	PLATE-19
822051647	PLATE-16	925509	PLATE-27	B001912GY	PLATE-19
825080209	PLATE-15	925521	PLATE-32	B001912WR	PLATE-19
825080209	PLATE-16	925567	PLATE-29	B001954R	PLATE-23
825123207	PLATE-17	925571	PLATE-29	B002101	PLATE-28
825420215	PLATE-13	925572	PLATE-29	B002101	PLATE-28
8265	PLATE-21	925573	PLATE-33	B002199	PLATE-22
841005207	PLATE-14	925574	PLATE-33	B002320	PLATE-13
841005207	PLATE-16	925577	PLATE-28	B002510R	PLATE-31
841005506	PLATE-16	925578	PLATE-28	B002551	PLATE-19
842001507	PLATE-14	925579	PLATE-28	B002823	PLATE-26
842001600	PLATE-17	925580	PLATE-28	B003155	PLATE-16
842002501	PLATE-14	925581	PLATE-28	B003228	PLATE-25
842002501	PLATE-16	925581	PLATE-29	B003784	PLATE-32
842003000	PLATE-16	925584	PLATE-29	B003784	PLATE-33
842004808	PLATE-14	925585	PLATE-29	B003924	PLATE-14
843000500	PLATE-16	925587	PLATE-28	B006581	PLATE-12
843000500	PLATE-16	925588	PLATE-28	B006789	PLATE-30
843000809	PLATE-27	925589	PLATE-29	B006806	PLATE-29
843000809	PLATE-17	925590	PLATE-28	B008167	PLATE-21
8432	PLATE-28	925597	PLATE-28	B009290	PLATE-29

118

Print Date: 27-Mar-2022

PART NO	BLOCK	PART NO	BLOCK	PART NO	BLOCK
B009290	PLATE-12	B042794	PLATE-27	E1410501001	PLATE-9
B009290	PLATE-12	B042798	PLATE-13	E141050100	PLATE-9
B009701	PLATE-30	B042798	PLATE-16	E1441570056	PLATE-8
B009952	PLATE-30	B042799	PLATE-13	E1756504	PLATE-6
B016611	PLATE-15	B073088	PLATE-21	E1756504	PLATE-7
B018991	PLATE-16	B073274	PLATE-30	E1756504	PLATE-7
B019220	PLATE-17	B073275	PLATE-30	E1756504	PLATE-9
B023726R	PLATE-28	B073320R	PLATE-31	E1756504	PLATE-11
B023727R	PLATE-28	B073850R	PLATE-29	E1756507	PLATE-6
B023727R	PLATE-29	B075220R	PLATE-30	E1756507	PLATE-9
B024169	PLATE-20	B075313	PLATE-26	E1756507	PLATE-10
B024170	PLATE-19	B075444	PLATE-30	E1756507	PLATE-11
B024179	PLATE-21	B075852	PLATE-27	E1756507	PLATE-11
B024179	PLATE-22	B076022ED	PLATE-30	E1762507	PLATE-6
B024373	PLATE-24	B076023	PLATE-19	E1962750311	PLATE-3
B024379	PLATE-26	B076807R	PLATE-26	E1965140021	PLATE-3
B024379	PLATE-17	BS4 1A010093	PLATE-16	E1965755128	PLATE-3
B024501	PLATE-30	E07500428	PLATE-7	E1967625270	PLATE-3
B024614	PLATE-16	E07500509	PLATE-10	E1967980064	PLATE-3
B024614	PLATE-18	E07500819	PLATE-8	E1969693007	PLATE-3
B024645	PLATE-22	E07502804	PLATE-1	E200467003	PLATE-6
B024732	PLATE-25	E07502810	PLATE-8	E200467003	PLATE-1
B024740	PLATE-28	E07502810	PLATE-10	E200467003	PLATE-8
B024855	PLATE-22	E07502810	PLATE-10	E200467021	PLATE-6
B025600	PLATE-28	E07502810	PLATE-10	E202177002	PLATE-11
B025601	PLATE-28	E07502811	PLATE-7	E202756511	PLATE-6
B04100R	PLATE-29	E07502811	PLATE-9	E2410122016	PLATE-9
B041522	PLATE-20	E07502811	PLATE-10	E2414601001	PLATE-9
B041524	PLATE-20	E07502812	PLATE-10	E2433314053	PLATE-9
B041535	PLATE-20	E07502813	PLATE-7	E245176006	PLATE-11
B041600	PLATE-26	E07506189	PLATE-8	E250467014	PLATE-1
B041600	PLATE-26	E105324008	PLATE-5	E250755504	PLATE-6
B042317	PLATE-27	E105324008	PLATE-6	E250755504	PLATE-6
B0423731GY	PLATE-30	E105324008	PLATE-7	E250755504	PLATE-11
B042486	PLATE-16	E105324008	PLATE-7	E250755507	PLATE-1
B042611	PLATE-21	E105324008	PLATE-7	E250755507	PLATE-1
B042612	PLATE-22	E105324008	PLATE-9	E250755507	PLATE-1
B042726ED	PLATE-30	E11770004	PLATE-10	E260120016	PLATE-6
B042731BL	PLATE-30	E11770004	PLATE-11	E260120016	PLATE-6
B042731BW	PLATE-30	E1177001	PLATE-6	E260467001	PLATE-2
B042731EG	PLATE-30	E1177001	PLATE-1	E260467001	PLATE-6
B042731GY	PLATE-30	E1324010	PLATE-11	E260756505	PLATE-11
B042731WR	PLATE-30	E1410210017	PLATE-9	E260973027	PLATE-6

119

Print Date: 27-Mar-2022

PART NO	BLOCK	PART NO	BLOCK	PART NO	BLOCK
E264973008	PLATE-6	E40006819	PLATE-8	E43501847	PLATE-7
E26756503	PLATE-11	E40008380	PLATE-2	E43502705	PLATE-4
E268120034	PLATE-2	E40009567	PLATE-11	E43502705	PLATE-1
E270973010	PLATE-7	E40009644	PLATE-7	E43502770	PLATE-4
E270973015	PLATE-11	E40009645	PLATE-7	E43502770	PLATE-1
E271678054	PLATE-1	E40009648	PLATE-11	E43502817	PLATE-1
E276176034	PLATE-6	E400101102	PLATE-7	E43502817	PLATE-11
E276843023	PLATE-6	E40010597	PLATE-4	E43502821	PLATE-10
E276846055	PLATE-1	E40010713	PLATE-2	E43502821	PLATE-10
E27762505	PLATE-7	E40011420PA	PLATE-4	E43502822	PLATE-10
E283467036	PLATE-8	E40011772	PLATE-1	E43506180	PLATE-2
E2916600006	PLATE-9	E40012271	PLATE-2	E43506181	PLATE-2
E2922833073	PLATE-11	E40012272	PLATE-2	E43506182	PLATE-2
E3124017	PLATE-4	E40015173	PLATE-7	E43506183	PLATE-2
E3414619005	PLATE-9	E40015173	PLATE-7	E43506639	PLATE-3
E3824509	PLATE-6	E40016138	PLATE-3	E43507330	PLATE-5
E40000477	PLATE-11	E40016141	PLATE-1	E43507331	PLATE-5
E40000549	PLATE-2	E40016143	PLATE-2	E43507357	PLATE-10
E40000565	PLATE-11	E40016144	PLATE-2	E43507359	PLATE-5
E40000687	PLATE-8	E40017130	PLATE-8	E43507784	PLATE-10
E40000704	PLATE-11	E40017131	PLATE-8	E43508875	PLATE-10
E40001008	PLATE-8	E40018345	PLATE-2	E43508876	PLATE-10
E40001763	PLATE-11	E40018625	PLATE-12	E43509046	PLATE-4
E40001765	PLATE-11	E40018626	PLATE-10	E43509593	PLATE-11
E40001773	PLATE-11	E40018626	PLATE-12	E43510714A	PLATE-4
E40001816	PLATE-6	E40020417	PLATE-3	E43510715	PLATE-4
E400022104	PLATE-2	E40020509	PLATE-4	E43510791	PLATE-4
E40002255	PLATE-2	E40020510	PLATE-4	E43510825	PLATE-10
E40002263	PLATE-1	E40020513A	PLATE-4	E43511440PA	PLATE-4
E40002264	PLATE-1	E40026134	PLATE-2	E43512268	PLATE-2
E40002264	PLATE-1	E40027131	PLATE-8	E43515174	PLATE-7
E40002265	PLATE-1	E40031732	PLATE-11	E43515174	PLATE-7
E40002265	PLATE-1	E40031732	PLATE-11	E43517706	PLATE-10
E40002266	PLATE-1	E40031733	PLATE-11	E43518074	PLATE-10
E40002560	PLATE-1	E40031733	PLATE-11	E43518074	PLATE-10
E40002578	PLATE-1	E406177005	PLATE-1	E43518076	PLATE-10
E400051135	PLATE-6	E422973030	PLATE-9	E43520571	PLATE-4
E400051135	PLATE-6	E422973030	PLATE-1	E43520572A	PLATE-4
E40005489	PLATE-11	E43500539	PLATE-1	E43520672	PLATE-10
E40005592	PLATE-11	E43500540	PLATE-1	E43521729	PLATE-10
E400060112	PLATE-5	E43500573	PLATE-2	E43521732	PLATE-10
E40006428	PLATE-5	E43500578	PLATE-10	E43521744	PLATE-10
E40006630	PLATE-3	E43501049	PLATE-8	E43521745	PLATE-1

120

Print Date: 27-Mar-2022

PART NO	BLOCK	PART NO	BLOCK	PART NO	BLOCK
E43521753	PLATE-10	E50001213143	PLATE-6	E500405518	PLATE-11
E43521778	PLATE-10	E500022105	PLATE-2	E500405518	PLATE-23
E43522234	PLATE-2	E50002296A	PLATE-4	E500450091	PLATE-10
E43522238	PLATE-2	E50002805	PLATE-1	E500450092	PLATE-10
E43522238	PLATE-2	E50002805	PLATE-10	E500450092	PLATE-2
E43522242	PLATE-2	E50002805	PLATE-10	E5004580057	PLATE-9
E43522257	PLATE-3	E50002805	PLATE-10	E500458023	PLATE-9
E43526147	PLATE-10	E50005136	PLATE-5	E500458024	PLATE-9
E43526149	PLATE-10	E50005137	PLATE-5	E500458029	PLATE-9
E43526150	PLATE-10	E50005625006	PLATE-6	E500460102	PLATE-1
E43526151	PLATE-10	E5000572536	PLATE-6	E500460120	PLATE-1
E43526171	PLATE-10	E50006060	PLATE-4	E500470094	PLATE-1
E43526174	PLATE-5	E50006101	PLATE-1	E500470103	PLATE-1
E43526175	PLATE-1	E50006169	PLATE-1	E500474018	PLATE-5
E43527167	PLATE-8	E50006328	PLATE-1	E5005200293	PLATE-7
E43527184	PLATE-8	E50006342	PLATE-2	E500520134	PLATE-6
E43527185	PLATE-8	E50006495029	PLATE-6	E500520214	PLATE-7
E43531725	PLATE-11	E50007334	PLATE-5	E500520260	PLATE-7
E43531743	PLATE-11	E50007626	PLATE-11	E5005271054	PLATE-5
E45762512	PLATE-11	E50007715	PLATE-10	E5005680046	PLATE-2
E47124004	PLATE-5	E50008099	PLATE-1	E500568043	PLATE-7
E47177007	PLATE-4	E50008883	PLATE-1	E500568044	PLATE-7
E47177007	PLATE-11	E50009023	PLATE-4	E500575545	PLATE-2
E47177007	PLATE-17	E50009205	PLATE-4	E500575549	PLATE-6
E50000114	PLATE-3	E50010157	PLATE-6	E500600036	PLATE-9
E50000160A	PLATE-4	E50010174	PLATE-7	E5006371045	PLATE-6
E50000164	PLATE-11	E50010174	PLATE-7	E500640030	PLATE-2
E50000225	PLATE-10	E500116011	PLATE-6	E500641036	PLATE-2
E50000307A	PLATE-4	E500125708A	PLATE-4	E500676035	PLATE-2
E50000307A	PLATE-1	E500141016	PLATE-5	E500676035	PLATE-9
E50000405	PLATE-11	E50016133	PLATE-8	E500755006	PLATE-5
E50000421	PLATE-1	E50016170	PLATE-5	E500843036	PLATE-9
E50000437	PLATE-6	E50018633	PLATE-10	E500900038	PLATE-4
E50000452	PLATE-7	E500197087	PLATE-1	E5009060011	PLATE-6
E50000475	PLATE-6	E50020128	PLATE-11	E5009520029	PLATE-5
E50000506	PLATE-2	E500208572	PLATE-6	E500985048	PLATE-5
E50000506	PLATE-1	E500213572	PLATE-2	E505193049	PLATE-2
E50000506	PLATE-8	E500217519	PLATE-6	E505985052	PLATE-5
E50000506	PLATE-1	E500220013	PLATE-6	E51981002	PLATE-3
E50000613	PLATE-6	E500228048	PLATE-4	E51981002	PLATE-6
E50000613	PLATE-9	E50025503	PLATE-9	E52006205	PLATE-7
E50000613	PLATE-1	E500324066	PLATE-6	E52006709	PLATE-6
E50000901	PLATE-2	E5003430070	PLATE-2	E52008924	PLATE-1

121

Print Date: 27-Mar-2022

PART NO	BLOCK	PART NO	BLOCK	PART NO	BLOCK
E5201160056	PLATE-7	E904850603	PLATE-3	ED41237	PLATE-9
E5205200777	PLATE-7	E90600031	PLATE-7	ED41447	PLATE-6
E5205801462	PLATE-6	E90979037	PLATE-11	ED41789	PLATE-3
E52200434	PLATE-11	E91200087	PLATE-9	ED41931	PLATE-8
E53002205	PLATE-1	E9121356	PLATE-1	ED42011	PLATE-3
E53002206	PLATE-1	E91760028	PLATE-7	ED42188	PLATE-11
E53002207	PLATE-1	E9176003	PLATE-6	ED42189	PLATE-11
E53002208	PLATE-1	E9177006	PLATE-11	ED42244	PLATE-6
E53002209	PLATE-1	E91901030	PLATE-8	ED42246	PLATE-11
E53002210	PLATE-1	E93240076	PLATE-2	ED42396	PLATE-4
E53002224	PLATE-1	E9324018	PLATE-8	ED42548	PLATE-1
E53005167	PLATE-5	E9324018	PLATE-1	ED42723	PLATE-9
E53005168	PLATE-5	E9411033342	PLATE-9	ED42723	PLATE-9
E53005170	PLATE-5	E9411034635	PLATE-9	ED43340	PLATE-9
E53006166	PLATE-1	E9431030172	PLATE-9	ED43340	PLATE-1
E53011748	PLATE-1	E9431033395	PLATE-9	ED43350	PLATE-6
E5402380456	PLATE-4	E9432030100	PLATE-9	ED43405	PLATE-3
E5402380456	PLATE-1	E94670059	PLATE-8	ED43409	PLATE-5
E5402380457	PLATE-4	E97625065	PLATE-2	ED43751	PLATE-3
E5402380457	PLATE-1	E97626043	PLATE-11	ED43751	PLATE-3
E5405725043	PLATE-11	E98420002	PLATE-7	ESK4336	PLATE-2
E5406045038	PLATE-5	E99732047	PLATE-1	ESK4336	PLATE-1
E5406140483	PLATE-6	ED11989	PLATE-11	ESK5565	PLATE-1
E5406850108	PLATE-1	ED21235	PLATE-6	ESK8694	PLATE-3
E5406850108	PLATE-1	ED22158	PLATE-11	ESK8832	PLATE-1
E5408480091A	PLATE-4	ED30956	PLATE-5	F000CD0301	PLATE-11
E5508000117	PLATE-2	ED31570	PLATE-8	F0020C40562	PLATE-9
E5508000118	PLATE-2	ED31943	PLATE-9	F002B10538	PLATE-9
E5604580049	PLATE-8	ED32131	PLATE-11	F002B10645	PLATE-9
E5604580169	PLATE-8	ED33204	PLATE-11	F002B70057	PLATE-9
E5604580170	PLATE-8	ED33454	PLATE-2	F002C40521	PLATE-9
E5609680013	PLATE-6	ED40165	PLATE-2	F002C40562	PLATE-9
E61200082	PLATE-3	ED40580	PLATE-2	F002C7Z112	PLATE-9
E6193361721	PLATE-10	ED40642	PLATE-9	F002F21098	PLATE-9
E6193361721	PLATE-11	ED40642	PLATE-1	F002F50006	PLATE-9
E70228047	PLATE-4	ED40718	PLATE-4	F002F5108	PLATE-9
E7101901012	PLATE-8	ED40719	PLATE-4	F002G20318	PLATE-11
E7102800049	PLATE-6	ED40893	PLATE-9	F002H20108	PLATE-8
E870022109	PLATE-2	ED41100	PLATE-10	F002H20333	PLATE-8
E87026113	PLATE-10	ED41150	PLATE-8	F002H20340	PLATE-8
E90303028	PLATE-1	ED41208	PLATE-6	F002H24593	PLATE-8
E904120213	PLATE-6	ED41228	PLATE-7	KIT 95021	PLATE-25
E904467015	PLATE-8	ED41236	PLATE-9	KIT 95022	PLATE-25

122