Parts Catalog

Commercial Vehicle

ApeCity_Xrta_230CC_E4_PTL_EXPORT

PIAGGIO VEHICLES PRIVATE LIMITED
Registered Office: Bund Garden Road ,Opp. Residency Club , Pune (India)

Print Date: 07-Apr-2022

PLATES INDEX

Sr No.	Plate Name	Plate No.	Page No.
1	ENGINE	1	1-2
2	COUPLED CRANKCASE	2	3-6
3	CRANKSHAFT	3	7-8
4	Cylinder Piston Group	4	9-10
5	CYLINDER HEAD UNIT - VALVE	5	11-12
6	ROCKER LEVERS SUPPORT UNIT	6	13-14
7	CYLINDER HEAD COVER	7	15-16
8	OIL PUMP	8	17-18
9	STARTER - ELECTRIC STARTER	9	19-20
10	FLYWHEEL_A.C GENERATOR ASSY.	10	21-22
11	FAN COVER & SHROUD ASSY.	11	23-24
12	GEAR-BOX COMPONENTS & GEAR SHIFTER	12	25-26
13	CLUTCH ASSY & CLUTCH COVER	13	27-28
14	DIFFERENTIAL	14	29-30
15	AIR FILTER ASSEMBLY	15	31-32
16	THROTTLE BODY - INJECTOR - INDUCTION JOINT - PETROL	16	33-34
17	ENGINE MOUNTING	17	35-36
18	SILENCER	18	37-38
19	COMPLETE H.T. COIL	19	39-40
20	Main frameÂ Assly & Cargo Body & Mirror	20	41-44
21	DOORS, TOOLS AND WHEELS	21	45-50
22	TOOLS AND WHEELS	22	51-52
23	HEAD LAMP & FRONT FACIA	23	53-56
24	Windshield /Glass/ Seats/ Carpets/Mirrors &Engine Door.	24	57-58
25	MUDGUARD & STICKER	25	59-60
26	FUEL TANK & FUEL LINE_PETROL	26	61-62
27	DASHBOARD ASSLY COMPLETE & LOCK SET	27	63-64
28	HANDLEBARS	28	65-66
29	WINDSCREEN WIPER	29	67-68
30	SELECTORS - SWITCHES - BUTTONS	30	69-70

Print Date: 07-Apr-2022

PLATES INDEX

Sr No.	Plate Name	Plate No.	Page No.
31	ELECTRICAL DEVICES / HEAD LAMP & TAIL LAMP ASSLY.	31	71-74
32	FORK/STEERING TUBE - STEERING BEARING UNIT	32	75-78
33	REAR SUSPENSION - SHOCK ABSORBER/S & ENGINE SUPPORT	33	79-82
34	DRIVE SHAFT & BELLOW	34	83-84
35	CABLES	35	85-86
36	BRAKE - TANDEM MASTER CYLINDER, BRAKE PIPE AND HAND BRAKES	36	87-90
37	CONTROL PEDALS - LEVERS	37	91-92
38	WIRING HARNESS	38	93-94
39	ELECTRICAL DEVICES & BATTERY MOUNTING	39	95-98
40	BRAKE ASSEMBLY FRONT & REAR	40	99-100

Print Date: 07-Apr-2022

PICTORIAL PLATES INDEX

PLATE-1 ENGINE

Page No. :1-2

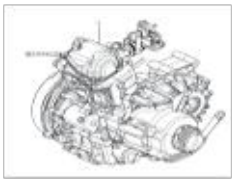

PLATE-2 COUPLED CRANKCASE

Page No. :3-6

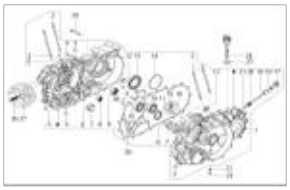

PLATE-3 CRANKSHAFT

Page No. :7-8

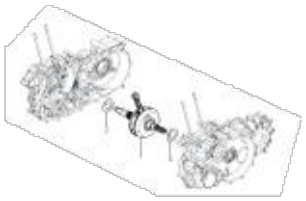

PLATE-4 Cylinder Piston Group

Page No. :9-10

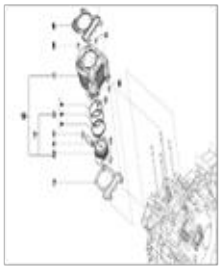

PLATE-5 CYLINDER HEAD UNIT - VALVE

Page No. :11-12

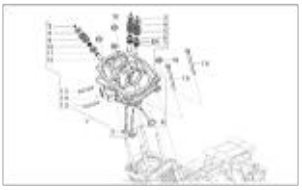

PLATE-6 ROCKER LEVERS SUPPORT UNIT

Page No. :13-14

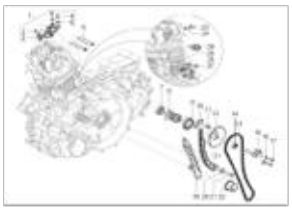

PLATE-7 CYLINDER HEAD COVER

Page No. :15-16

PLATE-8 OIL PUMP

Page No. :17-18

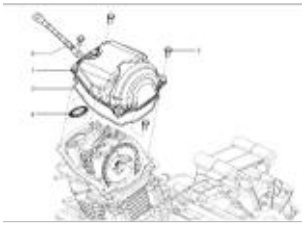

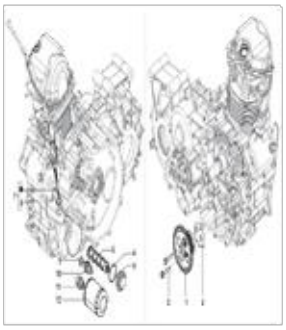

Print Date: 07-Apr-2022

PICTORIAL PLATES INDEX

PLATE-9 **STARTER - ELECTRIC STARTER**

Page No. :19-20

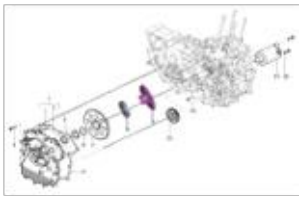

PLATE-10 **FLYWHEEL_A.C GENERATOR ASSY.**

Page No. :21-22

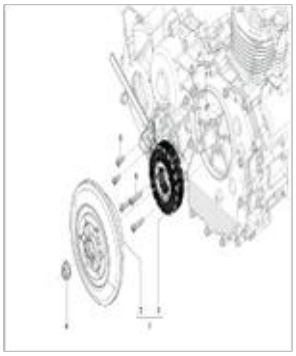

PLATE-11 **FAN COVER & SHROUD ASSY.**

Page No. :23-24

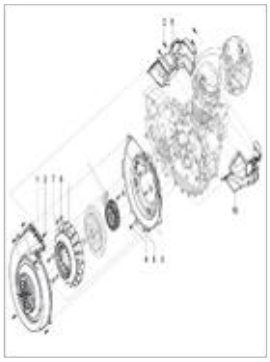

PLATE-12 **GEAR-BOX COMPONENTS & GEAR SHIFTER**

Page No. :25-26

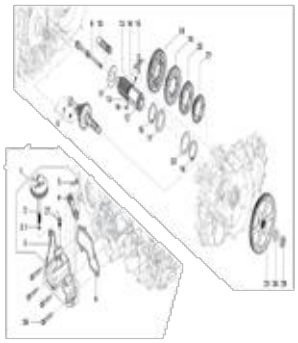

PLATE-13 **CLUTCH ASSY & CLUTCH COVER**

Page No. :27-28

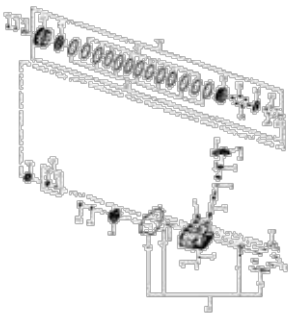

PLATE-14 **DIFFERENTIAL**

Page No. :29-30

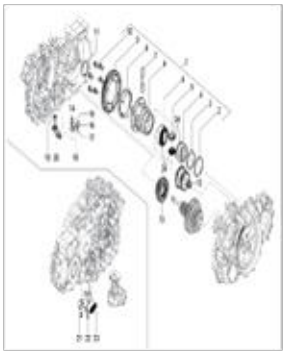

PLATE-15 **AIR FILTER ASSEMBLY**

Page No. :31-32

PLATE-16 **THROTTLE BODY - INJECTOR - INDUCTION JOINT - PETROL**

Page No. :33-34

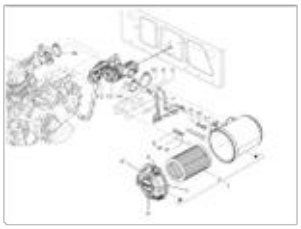

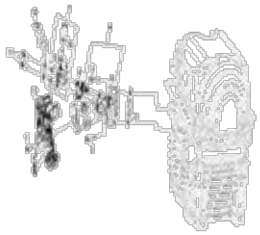

Print Date: 07-Apr-2022

PICTORIAL PLATES INDEX

PLATE-17 ENGINE MOUNTING

Page No. :35-36

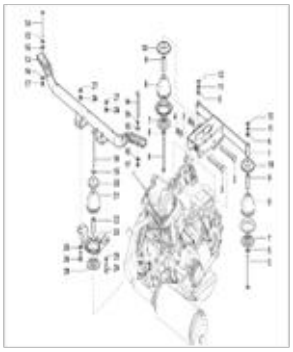

PLATE-18 SILENCER

Page No. :37-38

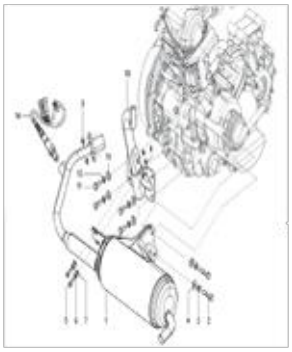

PLATE-19 COMPLETE H.T. COIL

Page No. :39-40

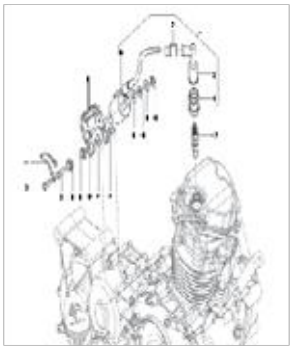

PLATE-20 Main frameÂ Assly & Cargo Body & Mirror

Page No. :41-44

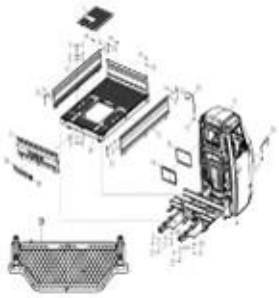

PLATE-21 DOORS, TOOLS AND WHEELS

Page No. :45-50

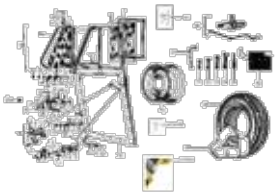

PLATE-22 TOOLS AND WHEELS

Page No. :51-52

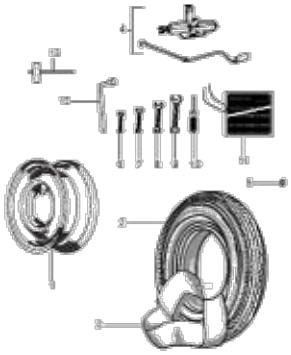

PLATE-23 HEAD LAMP & FRONT FACIA

Page No. :53-56

PLATE-24 Windshield /Glass/ Seats/ Carpets/Mirrors &Engine Door.

Page No. :57-58

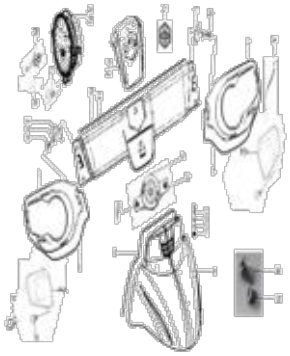

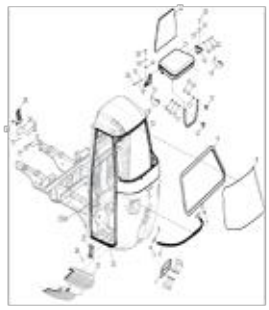

Print Date: 07-Apr-2022

PICTORIAL PLATES INDEX

PLATE-25 MUDGUARD & STICKER

Page No. :59-60

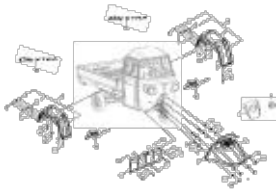

PLATE-26 FUEL TANK & FUEL LINE_PETROL

Page No. :61-62

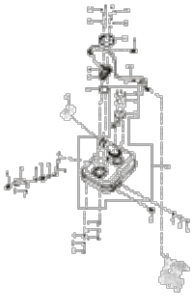

PLATE-27 DASHBOARD ASSLY COMPLETE & LOCK SET

Page No. :63-64

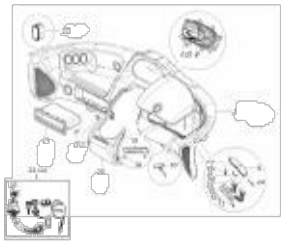

PLATE-28 HANDLEBARS

Page No. :65-66

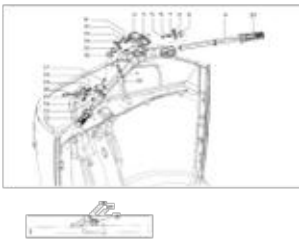

PLATE-29 WINDSCREEN WIPER

Page No. :67-68

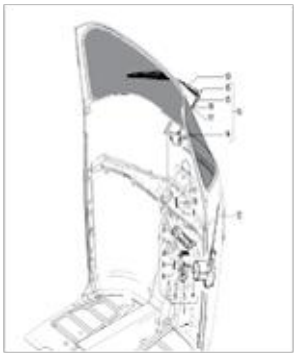

PLATE-30 SELECTORS - SWITCHES - BUTTONS

Page No. :69-70

PLATE-31 ELECTRICAL DEVICES / HEAD LAMP & TAIL LAMP ASSLY.

Page No. :71-74

PLATE-32 FORK/STEERING TUBE - STEERING BEARING UNIT

Page No. :75-78

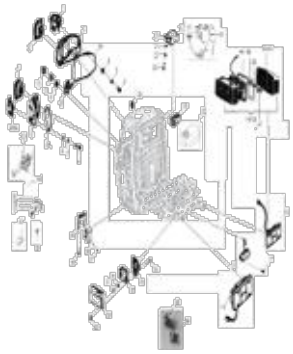

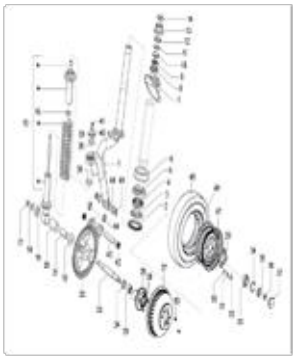

Print Date: 07-Apr-2022

PICTORIAL PLATES INDEX

PLATE-33 **REAR SUSPENSION - SHOCK ABSORBER/S & ENGINE SUPPORT**

Page No. :79-82

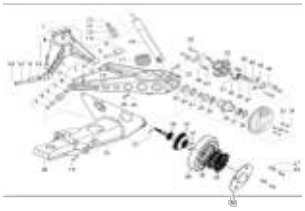

PLATE-34 **DRIVE SHAFT & BELLOW**

Page No. :83-84

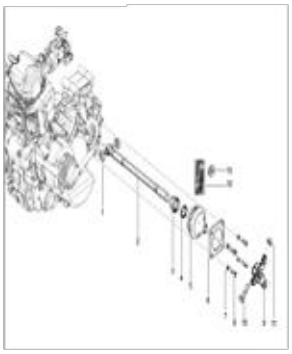

PLATE-35 **CABLES**

Page No. :85-86

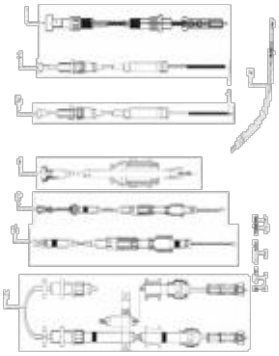

PLATE-36 **BRAKE - TANDEM MASTER CYLINDER, BRAKE PIPE AND HAND BRAKES**

Page No. :87-90

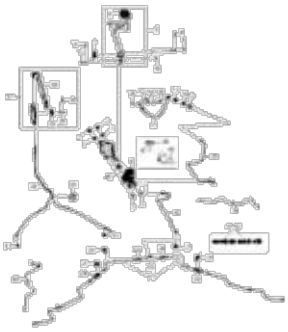

PLATE-37 **CONTROL PEDALS - LEVERS**

Page No. :91-92

PLATE-38 **WIRING HARNESS**

Page No. :93-94

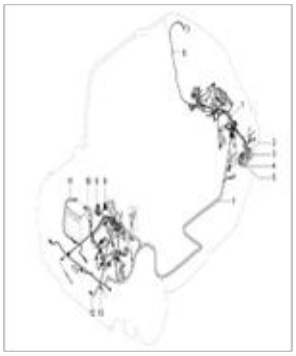

PLATE-39 **ELECTRICAL DEVICES & BATTERY MOUNTING**

Page No. :95-98

PLATE-40 **BRAKE ASSEMBLY FRONT & REAR**

Page No. :99-100

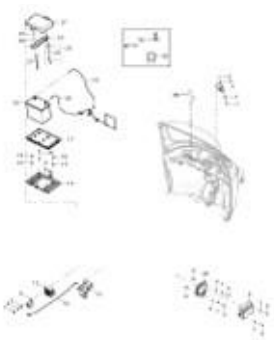

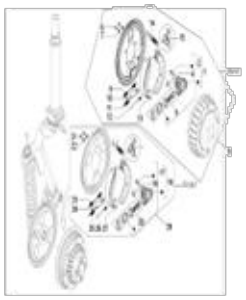

Print Date: 07-Apr-2022

PLATE-1
ENGINE

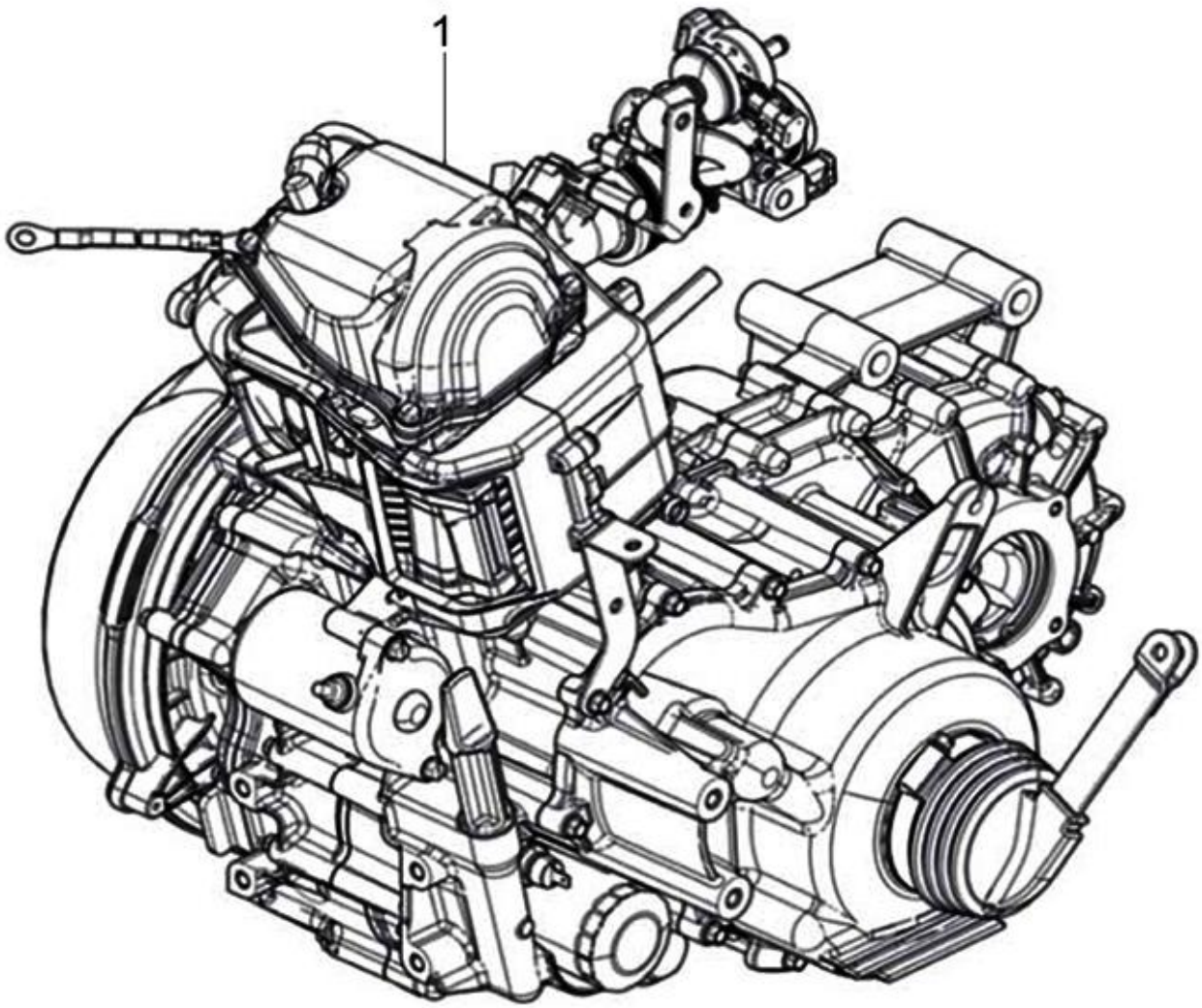
1

1

Print Date: 07-Apr-2022

PLATE-1
ENGINE

Fig. No.	Part No.	Description	Qty	Remarks
1	CM293932	ENG. 230 E4 APE CITY EXTRA PETROL	1	PTL

2

Print Date: 07-Apr-2022

PLATE-2
COUPLED CRANKCASE

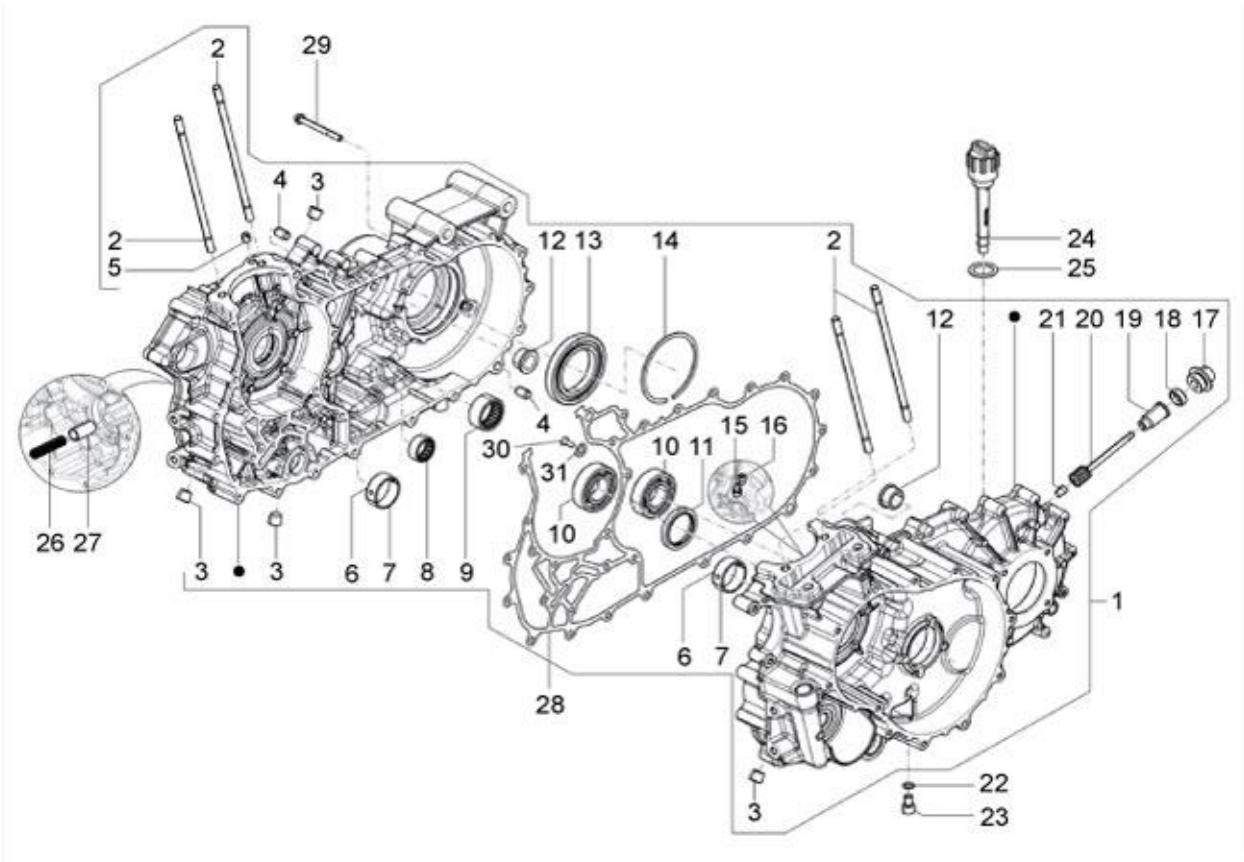
2
29
4
3
2
5
12 13
14
2
24
25
12
21 20 19 18 17
4
30
31
10 11
15 16
10
26 27
3
3
6 7 8 9
1
6 7
28
22
23
3

3

Print Date: 07-Apr-2022

PLATE-2
COUPLED CRANKCASE

Fig. No.	Part No.	Description	Qty	Remarks
1	SP1A007046	COMPLETE CRANKCASE- SPD	1	
2	B014755	STUD SCREW	4	
3	1A011246	TAPER THREAD PLUG	4	
4	B015592	REFERENCE DOWEL (D.9,5 H=15)	2	
5	1A007774	DOWEL	1	
6	1A007663R	CRANKSHAFT STUB UPPER HALF BEARING	1	Service on colorwise set KIT95007R/7Y/7B
7	1A007664R	CRANKSHAFT STUB LOWER HALF BEARING	1	Service on colorwise set KIT95007R/7Y/7B
8	884222808	NEEDLE BUSH 22X28X12	1	
9	1A007028	ROLLER BEARING	1	
10	1A007026	BALL BEARING	2	
11	1A002685	SEAL RING 35X47X6	1	
12	B042486	BUSH	2	
13	7066R	RADIAL BALL BEARING	1	
14	111353	CIRCLIP	1	
15	1A008823	PISTON COOLING JET	1	
16	1A000612	RETAINER SCREW - PRE COATED	1	
17	1A008559	BUSH (SPEEDOMETER GEAR)	1	
18	117402	OIL SEAL	1	
19	117401	BUSH	1	
20	1A010720	SPEEDOMETER GEAR	1	
21	165121014	PIN	1	
22	485703	WASHER	1	
23	269755	SOCKET HEAD SCREW (M8X12)	1	
24	112898	OIL LEVEL ARM WITH PLUG	1	
25	127016015	DIPSTICK SEALING WASHER	1	
26	485655	SPRING FOR OIL PRESSURE VALVE	1	
27	829661	OIL PRES.VALVE	1	
28	1A006856	HALF-CRANKCASES GASKET	1	
29	432142	HEXAGONAL RANGE HEAD SCREW (M6X35)	30	
30	1A016964	CSK PHILIPS HEAD SCREW	1	
31	1A011217	WASHER	1	
32	KIT95007R	CRANKSHAFT BEARING SET_RED COLOUR	1	Red color bearing set(consist Of sr no 6,7)
33	KIT95007Y	CRANKSHAFT BEARING SET_YELLOW COLOUR	1	Yellow color bearing set(consist Of sr no 6,7)
34	KIT95007B	CRANKSHAFT BEARING SET_BLUE COLOUR	1	Blue color bearing set(consist Of sr no 6,7)
35	KIT96028R	ENGINE GASKET SET APECITY BS3/4 STEP-2	1	NI

4

Print Date: 07-Apr-2022

PLATE-2
COUPLED CRANKCASE

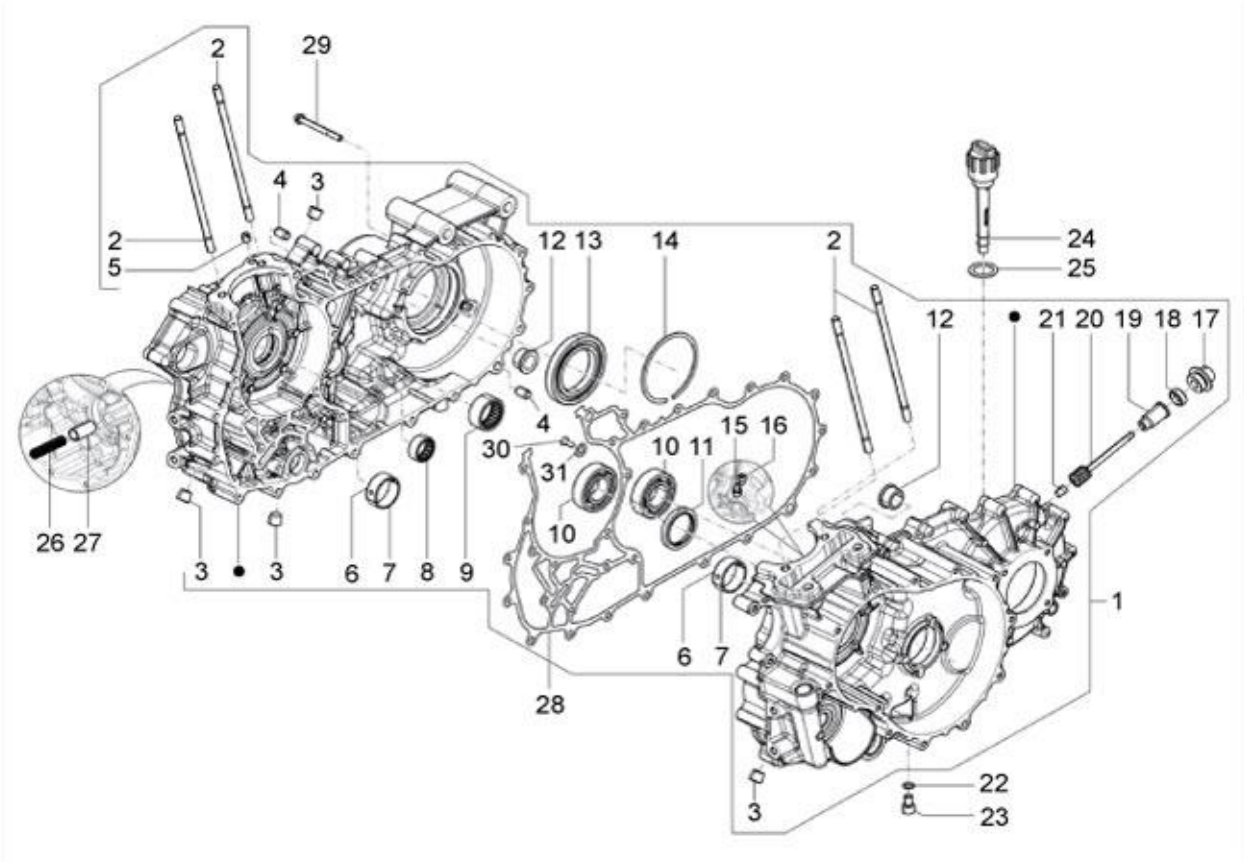
2
29
4
3
2
5
12 13
14
2
24
25
12
21 20 19 18 17
4
30
31
10 11
15 16
10
26 27
3
3
6 7 8 9
1
6 7
28
22
23
3

5

Print Date: 07-Apr-2022

PLATE-2
COUPLED CRANKCASE

Fig. No.	Part No.	Description	Qty	Remarks
36	KIT95105R	ENG.OIL SEAL SET APECITY-STEP-2 AND 230CC AF	1	NI

6

Print Date: 07-Apr-2022

PLATE-3
CRANKSHAFT

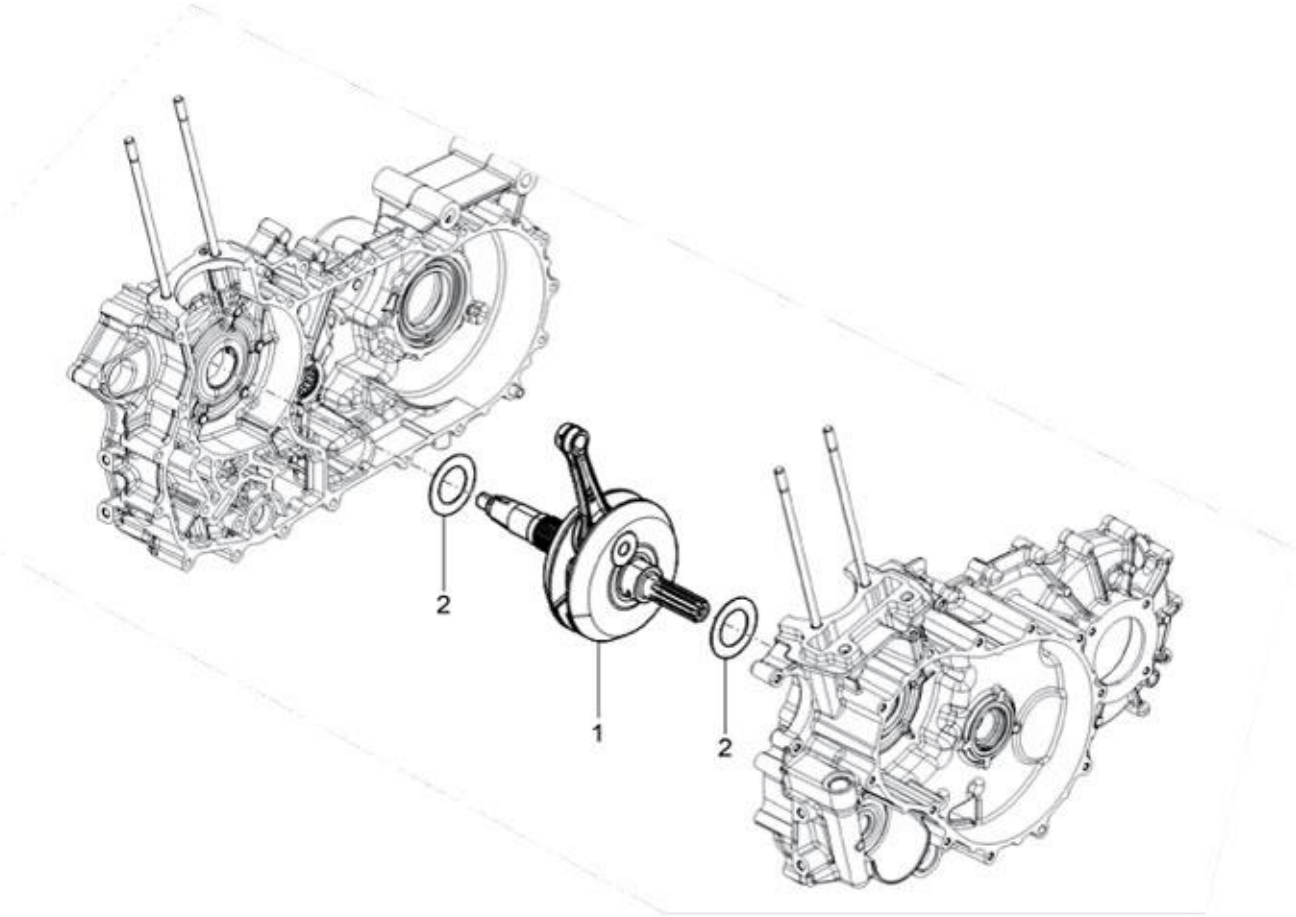
2
1
2

7

Print Date: 07-Apr-2022

PLATE-3
CRANKSHAFT

Fig. No.	Part No.	Description	Qty	Remarks
1	1A011066	CRANKSHAFT ASSEMBLY	1	
2	B016144	WASHER	2	

8

Print Date: 07-Apr-2022

PLATE-4

Cylinder Piston Group

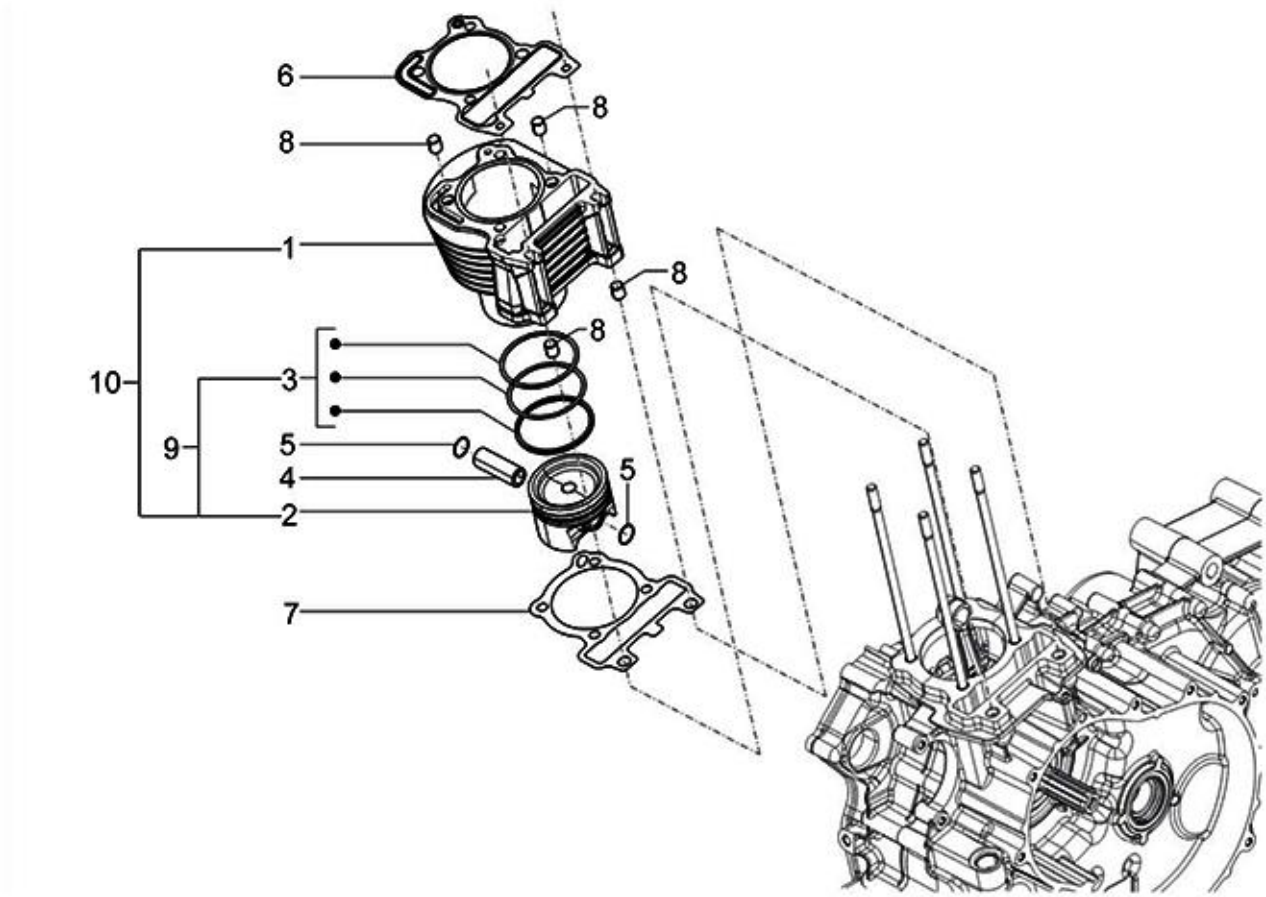
6
8
8
1
8
8
10
3
9
5
4
5
2
7

9

Print Date: 07-Apr-2022

PLATE-4

Cylinder Piston Group

Fig. No.	Part No.	Description	Qty	Remarks
1	SP1A005855	CYLINDER APE PAX SPD	1	
2	1A018094	PISTON DIA62.6	1	
3	1A009621R	PISTON RING GROUP	1	
4	482335	PISTON PIN	1	
5	963486	CIRCLIP FOR PISTON WRIST	2	
6	B014555	HEAD CYLINDER GASKET	1	
7	CM284002	CRANKCASE/CYLINDER GASKET (0.6)	1	
7	CM284003	CRANKCASE/CYLINDER GASKET (0.8)	1	
7	CM284001	CRANKCASE/CYLINDER GASKET (0.4)	1	
8	435571	REFERENCE DOWEL	4	
9	KIT96055R	PISTON ASSY.APE CITY AND APE CITYPLUS_ (PTL BS6)	1	NS- Service under BP Kit
10	KIT96054R	BP KIT APE CITY AND APE CITYPLUS_(PTL BS6)	1	Carry over from Ape city+ BSVI

10

Print Date: 07-Apr-2022

PLATE-5

CYLINDER HEAD UNIT - VALVE

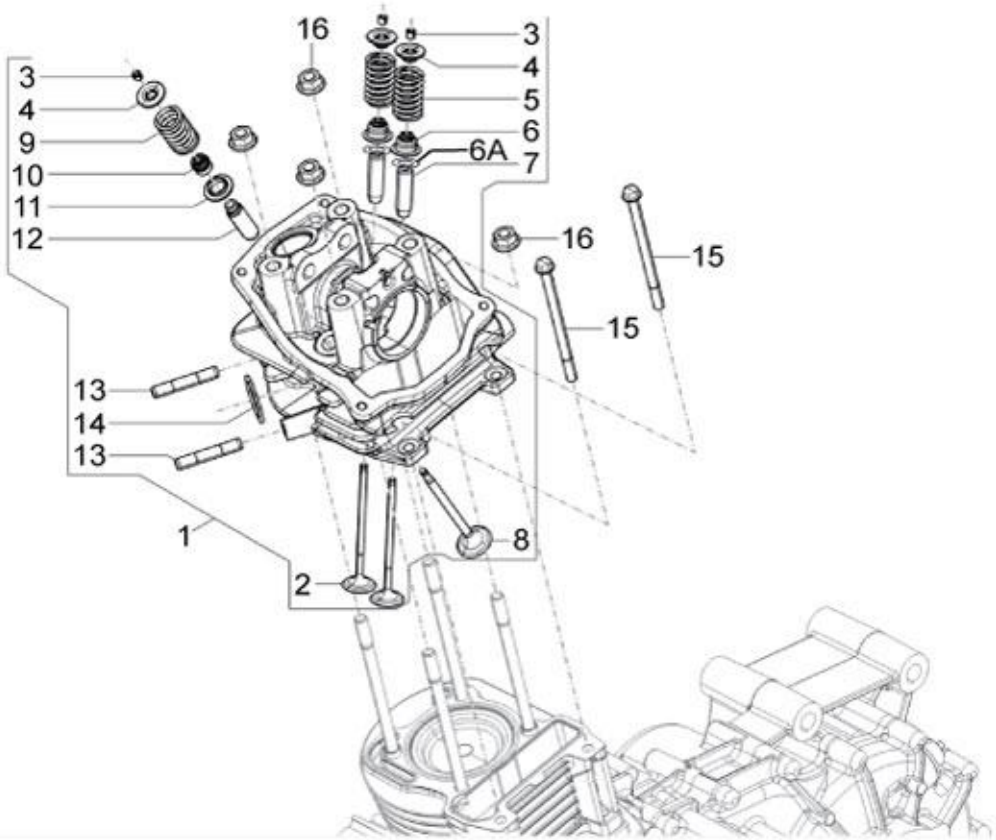
16
3
4
5
6
6A
7
3
4
9
10
11
12
16
15
15
13
14
13
1
8
2

11

Print Date: 07-Apr-2022

PLATE-5

CYLINDER HEAD UNIT - VALVE

Fig. No.	Part No.	Description	Qty	Remarks
1	SP1A017573	CYLINDER HEAD ASSY_SPD	1	
2	B014684	INTAKE VALVE Ø20	2	
3	B015288	HALF-CONE	6	
4	B017456	UPPER CUP	3	
5	B014706	VALVE SPRING (INTAKE)	1	
6	843307	VALVE SEAL RING	2	
6A	1A012925	SLIDING WASHER	2	
7	NS	NOT SERVICEABLE	2	
8	B017438	EXHAUST VALVE Ø22	1	
9	B014705	VALVE SPRING (EXHAUST)	1	
10	83054R	VALVE SEAL RING	1	
11	483711	LOWER CUP	1	
12	NS	NOT SERVICEABLE	1	
13	B016368	SPECIAL STUD	2	
14	434716	CYLINDER HEAD/MUFFLER GASKET	1	
15	B018854	HEXAGONAL HEAD FLANGED SCREW M6X90	2	
16	B016939	FLANGED NUT M8X1.25	4	
17	KIT1U000020	SET OF VALVES	1	NI (Consists Of Sr.NO.-2&8)
18	KIT95011R	VALVE SEAL RING SET	1	NI (Consists Of Sr.NO.-10&16)

12

Print Date: 07-Apr-2022

PLATE-6

ROCKER LEVERS SUPPORT UNIT

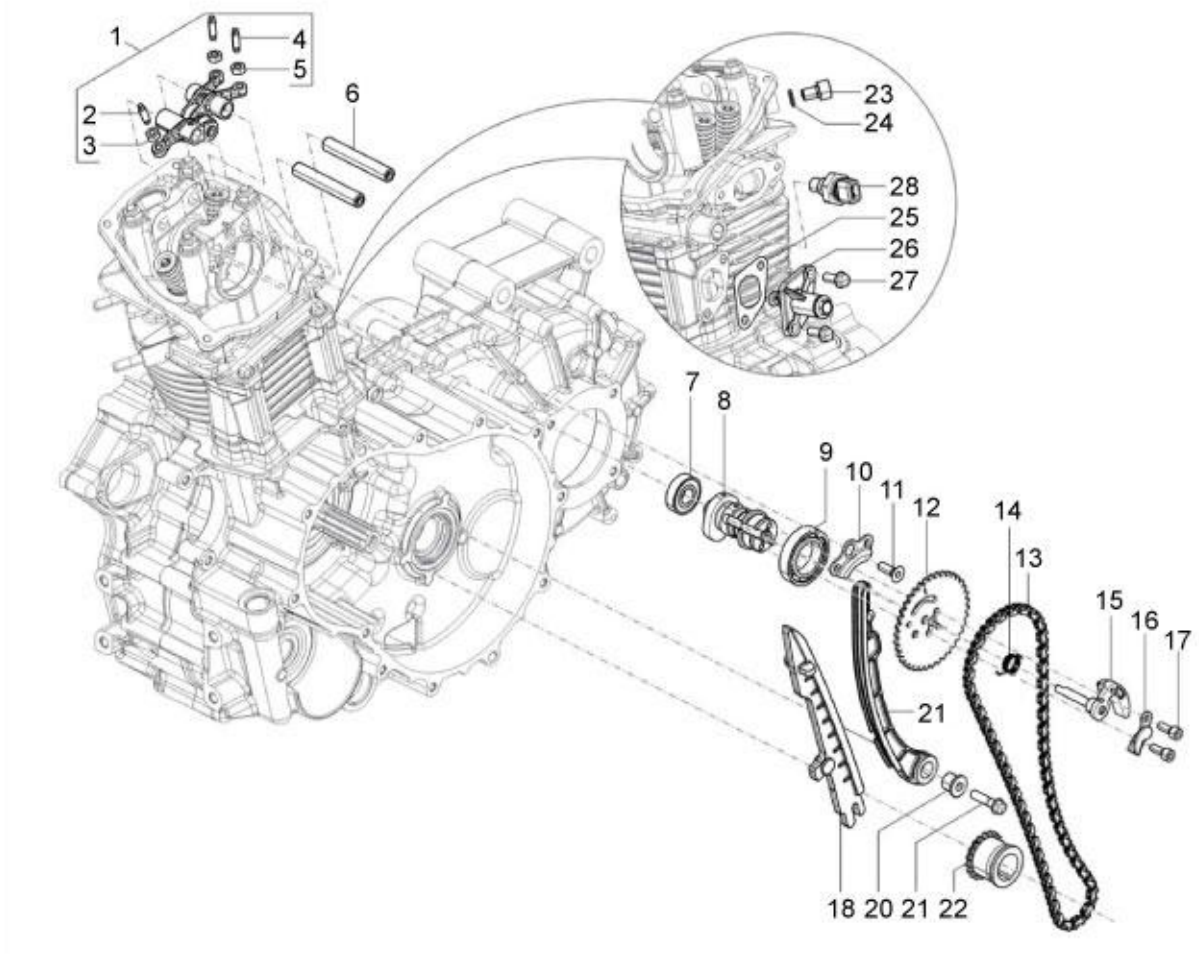
1
2
3
4
5
6
7
8
9
10
11
12
13
14
15
16
17
18
20
21
22
23
24
25
26
27
28

13

Print Date: 07-Apr-2022

PLATE-6

ROCKER LEVERS SUPPORT UNIT

Fig. No.	Part No.	Description	Qty	Remarks
1	1A013013	ROCKER ARM GROUP	1	
2	B017323	VALVE ADJUSTMENT SCREW	1	
3	B017431	ROCKER ARM NUT	1	
4	B017323	VALVE ADJUSTMENT SCREW	2	
5	B017431	ROCKER ARM NUT	2	
6	B017113	ROCKER ARM SHAFT	2	
7	83040R	DEEP GROOVE BALL BEARING	1	
8	B017746	CAMSHAFT WITH I.P.	1	
9	83041R	DEEP GROOVE BALL BEARING	1	
10	B014760	CAMSHAFT CONTAINMENT SHEET-STEEL	1	
11	B018946	COUNTERSUNK SCREW M6X18	1	
12	1A002358	TIMING CROWN	1	
13	1A015692	TIMING CHAIN SOUNDLESS TYPE	1	
14	B015483	DECOMPRESSION SPRING	1	
15	SP1A006405	CENTRIFUGAL MASS WITH I.P.	1	
16	1A008397	CENTRIFUGAL MASS CONTAINMENT SHEET	1	
17	B018718	EXAG. SOCKET CYLIND.HEAD SCREW M5X14	2	
18	1A006899	FIXED PAD	1	
19	1A006901	CHAIN TIGHTENING ROD	1	
20	485868	SPACER FOR CHAIN TIGHTNING ROD	1	
21	B016774	FLANGED HEXAGONAL SCREW M6X25	1	
22	1A007565	TIMING PINION	1	
23	269755	SOCKET HEAD SCREW (M8X12)	1	
24	485703	WASHER	1	
25	847928	CHAIN SUPPORT GASKET	1	
26	B017165	CHAIN TENSIONER DEVICE	1	
27	434541	SCREW	2	
28	58273R	THERMIC SENSOR	1	

14

Print Date: 07-Apr-2022

PLATE-7
CYLINDER HEAD COVER

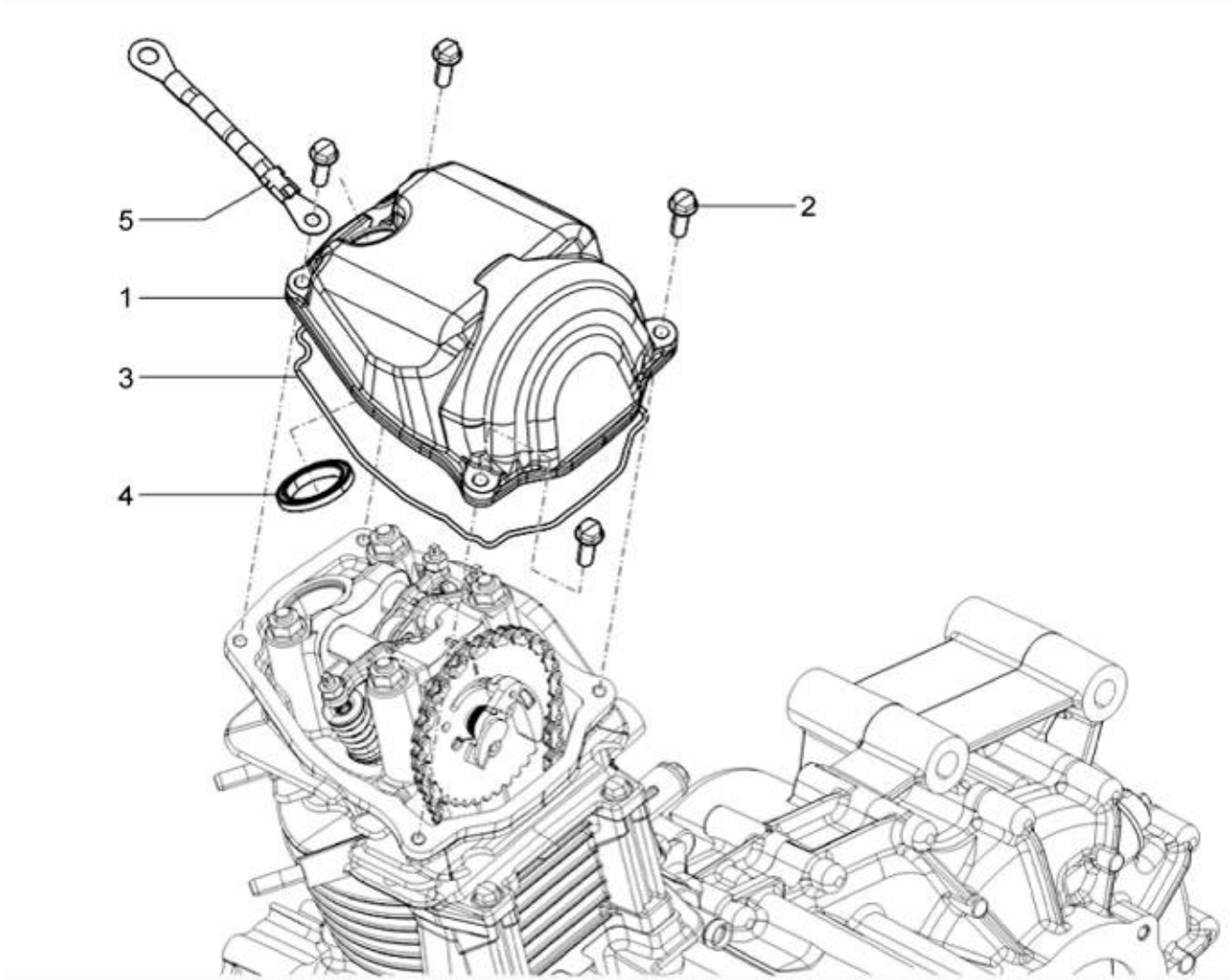
5
1
3
4
2

15

Print Date: 07-Apr-2022

PLATE-7
CYLINDER HEAD COVER

Fig. No.	Part No.	Description	Qty	Remarks
1	1A006545	HEAD COVER	1	
2	018639	SCREW M6X20	4	
3	B018533	CYLINDER HEAD COVER GASKET	1	
4	B014732	SPARK PLUG HOLE GASKET	1	
5	1D001894	GROUND WIRE	1	

16

Print Date: 07-Apr-2022

PLATE-8
OIL PUMP

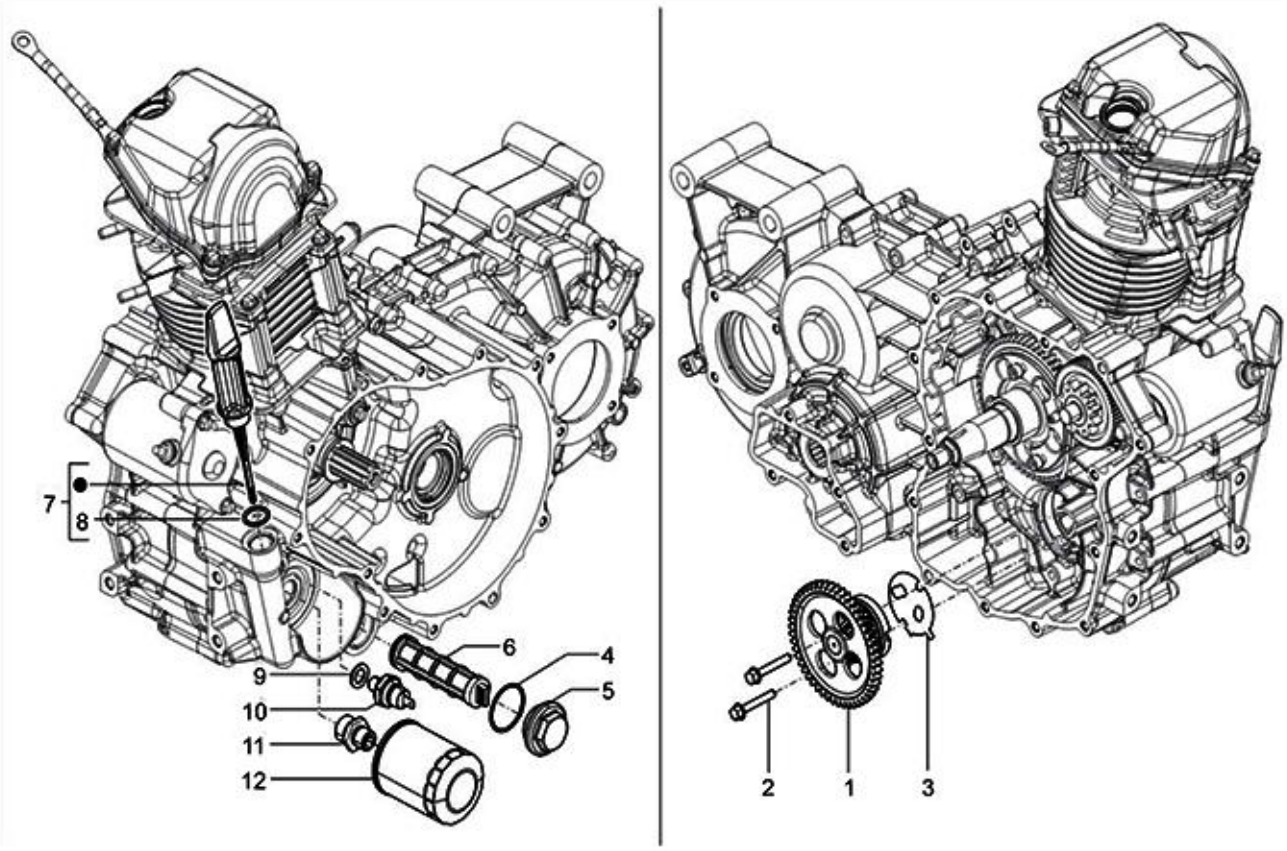
7
8
9
10
11
12
6
4
5
2
1
3

17

Print Date: 07-Apr-2022

PLATE-8
OIL PUMP

Fig. No.	Part No.	Description	Qty	Remarks
1	1A006877	OIL PUMP ASSY	1	
2	1A016737	FLANGED HEXAGONAL HEAD SCREW	2	
3	B015943	CRANKCASE/ OIL PUMP GASKET	1	
4	285536	O-RING GASKET 31.47X1.78	1	
5	B015598	OIL FILTER PLUG	1	
6	1A006812	COMPLETE INTAKE OIL FILTER	1	
7	1A007047	OIL DIPSTICK COMPLETE	1	
8	479986	O-RING GASKET	1	
9	1A011500	WASHER	1	
10	1D001138	MINIMUM PRESSURE OIL SWITCH	1	
11	1A009762	OIL FILTER SCREW	1	
12	82635R	COMPLETE OIL FILTER	1	

18

Print Date: 07-Apr-2022

PLATE-9

STARTER - ELECTRIC STARTER

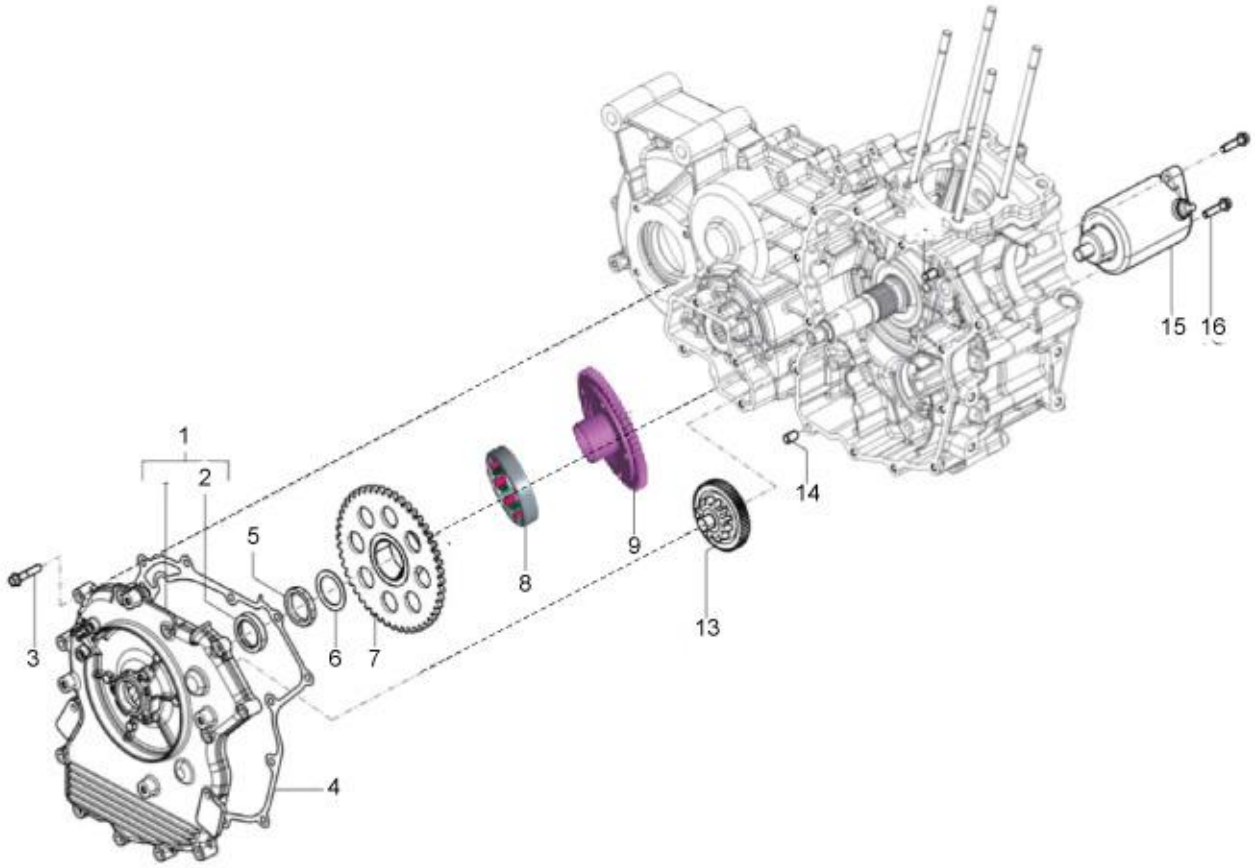
1
2
3
4
5
6
7
8
9
13
14
15
16

19

Print Date: 07-Apr-2022

PLATE-9

STARTER - ELECTRIC STARTER

Fig. No.	Part No.	Description	Qty	Remarks
1	SP1A007045	STARTER COVER WITH I.P.	1	
2	B016120	SEAL RING 25X35X7	1	
3	B018853	FLANGED HEXAGONAL HEAD SCREW M6X30	14	
4	1A006858	STARTER COVER GASKET	1	
5	1A021204	RING NUT	1	
6	B016148	WASHER	1	
7	1A018038	CROWN ELECTRIC STARTER WITH I.P.	1	
8	1A020456	ONE WAY CLUTCH ASSY	1	
9	1A018212	CUM CLUTCH HUB	1	
10	1A009592	O-RING KIT	1	NI
11	1A009593	THRUST WASHER KIT	1	NI
12	SP41A020456	ONE WAY CLUTCH HUB ASSY - 230CC SPD	1	Consists of Part 7,8 & 9
13	B017189	ELECTRIC STARTER INTERMED GEAR WITH P.I.	1	
14	1A000708	DOWEL (Ø7,5, H=12)	2	
15	1A018642R	ELECTRIC STARTER MOTOR	1	
16	B016774	FLANGED HEXAGONAL SCREW M6X25	2	
17	1A009591	HEXAG. HEAD SCREW	1	NI
18	1A009586	REAR BRACKET ASSY	1	NI
19	1A009587	BRUSH ASSLY KIT (+VE & -VE)	1	NI
20	1A009588	ARMATURE ASSLY	1	NI
21	1A009589	YOKE ASSLY	1	NI
22	1A009590	FRONT BRACKET ASSLY	1	NI

20

Print Date: 07-Apr-2022

PLATE-10

FLYWHEEL_A.C GENERATOR ASSY.

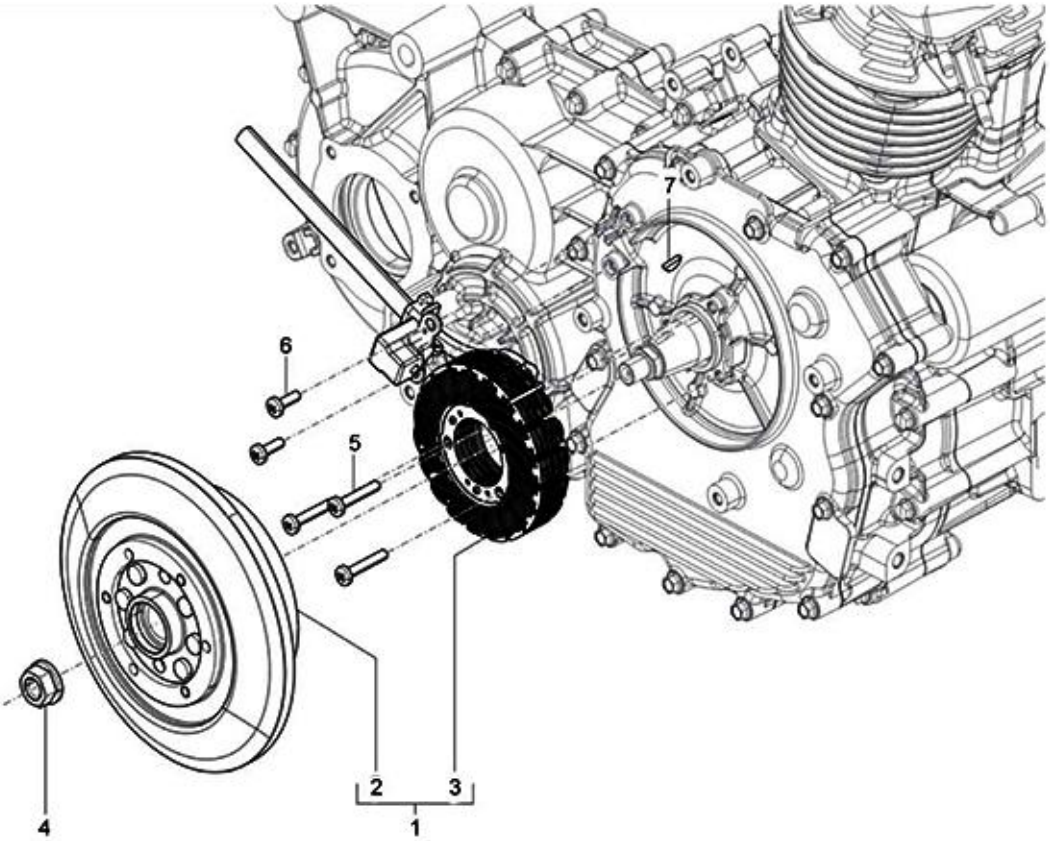
7
6
5
2
3
1
4

21

Print Date: 07-Apr-2022

PLATE-10

FLYWHEEL_A.C GENERATOR ASSY.

Fig. No.	Part No.	Description	Qty	Remarks
1	1D002080	COMPLETE A.C.GENERATOR	1	
2	1A009302	ROTAR ASSY WITH HUB	1	
3	1D001846	COMPLETE STATOR	1	
4	1A006988	NUT WITH SPRING WASHER	1	
5	1A001073	TORX HEAD SCREW M5X16	3	
6	1A013159	TORX HEAD SCREW M5X22	2	
7	000267	WOODRUFF KEY	1	

22

Print Date: 07-Apr-2022

PLATE-11

FAN COVER & SHROUD ASSY.

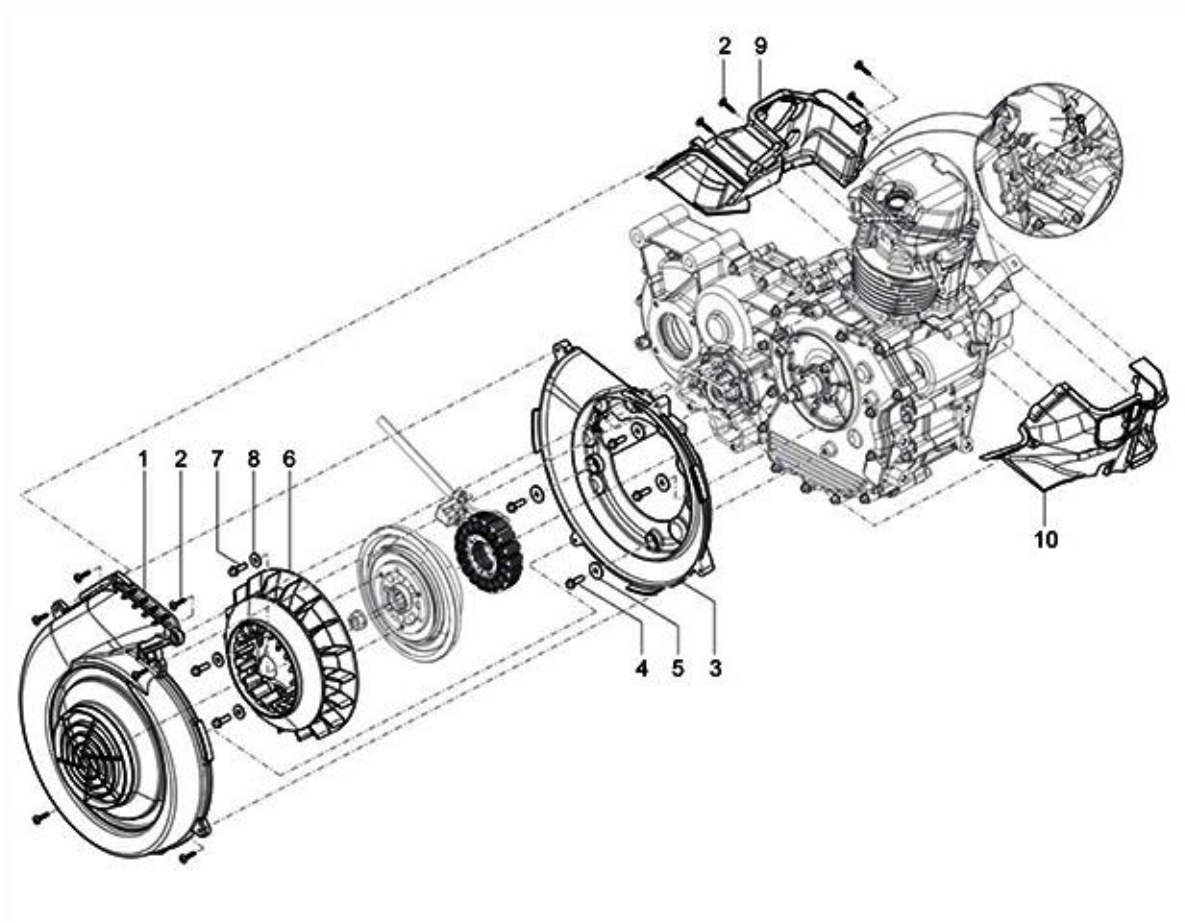
2
9
1
2
7
8
6
10
4
5
3

23

Print Date: 07-Apr-2022

PLATE-11

FAN COVER & SHROUD ASSY.

Fig. No.	Part No.	Description	Qty	Remarks
1	1A010001	FAN COVER	1	
2	1A000024	SELF TAPPING SCREW (3X20)	10	
3	1A006742	FAN COVER SUPPORT	1	
4	018639	SCREW M6X20	4	
5	B016192	WASHER 6.2X20X2	4	
6	1A000831	ASSY FAN	1	
7	1A002691	FLANGED HEX HEAD SCREW M6X20 CL10	3	
8	B019047	WASHER	3	
9	1A009270	COMPLETE SHROUD INTAKE SIDE	1	
10	1A006740	SHROUD EXHAUST SIDE	1	
11	B016620	SCREW WITH CYLINDRICAL HEAD M5X21	1	

24

Print Date: 07-Apr-2022

PLATE-12

GEAR-BOX COMPONENTS & GEAR SHIFTER

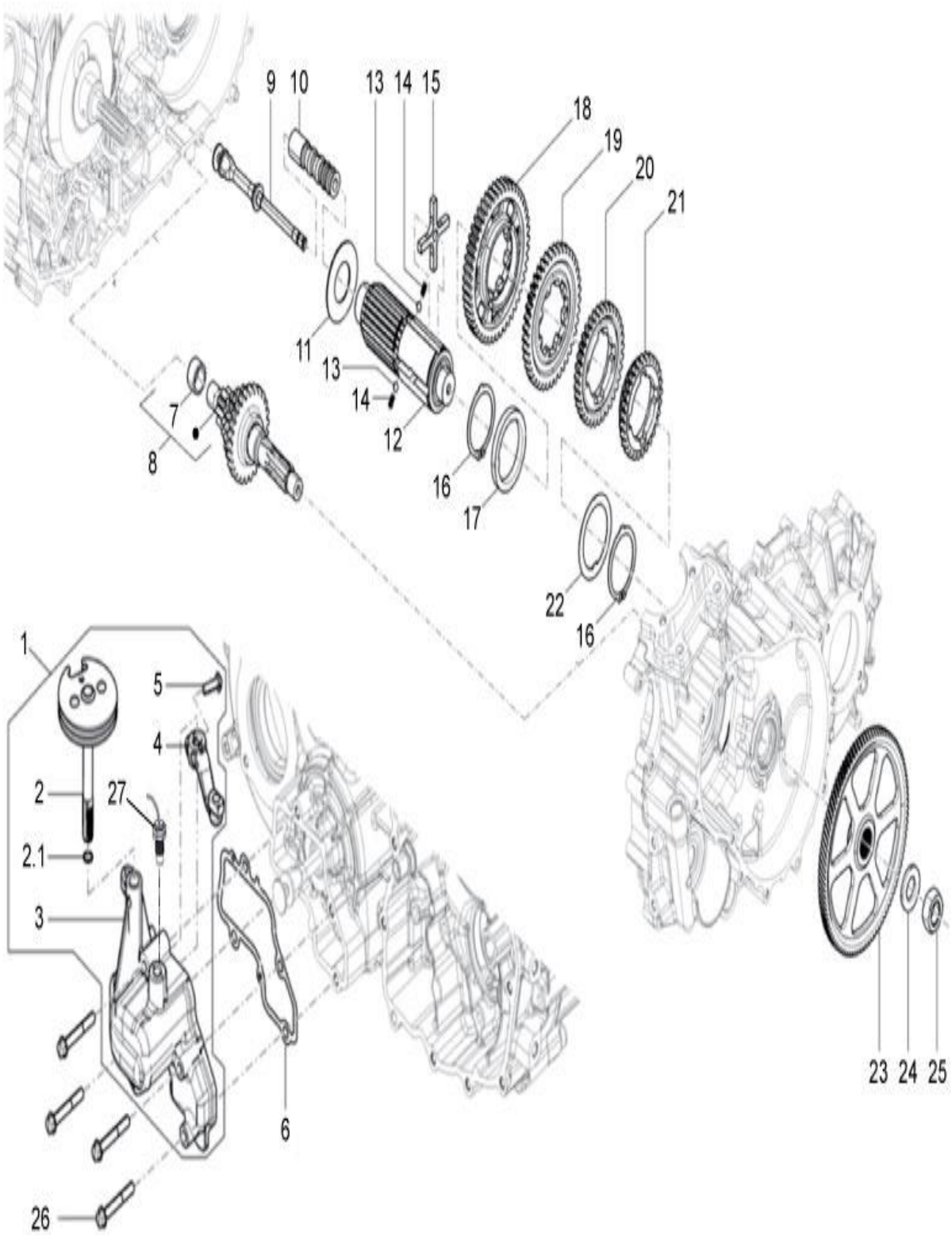
9
10
13
14
15
18
19
20
21
11
13
14
12
7
8
16
17
22
16
1
5
4
2
27
2.1
3
6
26
23
24
25

25

Print Date: 07-Apr-2022

PLATE-12

GEAR-BOX COMPONENTS & GEAR SHIFTER

Fig. No.	Part No.	Description	Qty	Remarks
1	SP1A011650	COMPLETE GEAR SHIFTER ASSY	1	
2	1A010035	COMPLETE SECTOR WITH SHAFT	1	
2.1	1A005178	O- RING	1	
3	1A012182	GEAR SHIFTER HOUSING	1	
4	SP1A007579	COMPL. INVERTER LEVER SECTOR(BSIV)- SPD	1	
5	1A001073	TORX HEAD SCREW M5X16	1	
6	1A012334	GASKET GEAR SHIFTER HOUSING	1	
7	122032014	INNER RING - CLUSTER GEAR	1	
8	1A014870	CLUSTER GEAR WITH I.P.	1	
9	1A012181	STEM	1	
10	1A012846	BUSH GEAR SHIFTER	1	
11	1A007029	LOCK WASHER	1	
12	1A017112	SECONDARY GEAR SHAFT	1	
13	002139	BALL	2	
14	1A006970	SPRING	2	
15	1A010166	CROSS	1	
16	009101	SEEGER RING	2	
17	1A006701	LOCK WASHER	1	
18	1A014871	SPEED GEAR 1ST	1	
19	1A014872	SPEED GEAR 2ND	1	
20	1A014873	SPEED GEAR 3RD	1	
21	1A014874	SPEED GEAR 4TH	1	
22	1A006115	LOCK WASHER	1	
23	NS	NOT SERVICEABLE	1	
24	B018464	BELLEVILLE SPRING	1	
25	1A012845	HEX. NUT M16X1.25	1	
26	B016611	FLANGED HEX. HEAD SCREW M6X45 CL10	4	
27	1A010016	NEUTRAL SWITCH	1	

26

Print Date: 07-Apr-2022

PLATE-13

CLUTCH ASSY & CLUTCH COVER

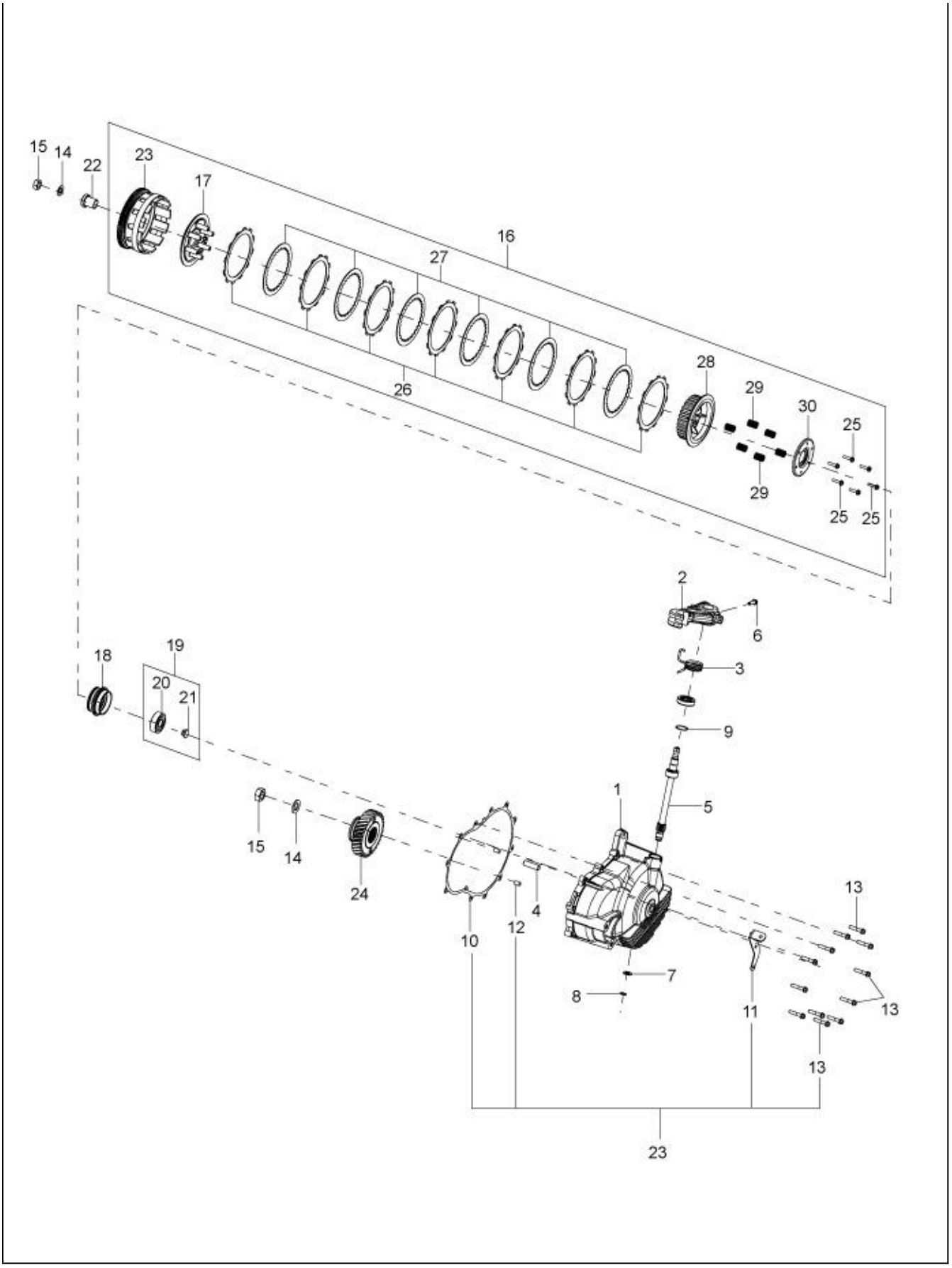
15
14
22
23
17
16
27
26
28
29
30
25
29
25
25
2
6
3
18
19
20
21
9
1
5
15
14
24
10
12
4
13
7
8
11
13
13
23

27

Print Date: 07-Apr-2022

PLATE-13

CLUTCH ASSY & CLUTCH COVER

Fig. No.	Part No.	Description	Qty	Remarks
1	1A013915	CLUTCH COVER	1	
2	1A015505	CLUTCH LEVER	1	
3	1A012374	CLUTCH DRIVE SPRING	1	
4	1A012702	CLUTCH CONTROL SHAFT	1	
5	1A012376	CLUTCH DRIVE SHAFT	1	
6	018639	SCREW M6X20	1	
7	1A007501	PLANE WASHER	1	
8	006410	CIRCLIP	1	
9	1A012373	SEAL RING 12X22X6	1	
10	1A011940	CLUTCH COVER GASKET	1	
11	1A011461	SUPPORT BRACKET STARTER MOTOR CABLE	1	
12	1A000708	DOWEL (Ø7,5, H=12)	2	
13	B018853	FLANGED HEXAGONAL HEAD SCREW M6X30	12	
14	B018464	BELLEVILLE SPRING	2	
15	1A012845	HEX. NUT M16X1.25	1	
16	1A013629	CLUTCH ASSY	1	
17	1A019391	WHEEL CLUTCH	1	
18	1A010540	CLUTCH PRESSURE PLATE	1	
19	SP1A010560	CLUTCH PRESSURE BUSH WITH I.P.	1	
20	478261	PULLEY SHAFT BEARING	1	
21	1A010561	CLUTCH PRESSURE BUSH	1	
22	1A010461	SPACER	1	
23	1A019375	HOUSING CLUTCH ASSLY	1	
24	1A010208	ENGINE GEAR	1	
25	1A019394	HEX BOLT	6	
26	1A019389	REG. FRICTION PLATE	7	
27	1A019390	PLATE CLUTCH	6	
28	1A019388	HUB CLUTCH WITH INSERT	1	
29	1A019392	SPRING CLUTCH	6	
30	1A019393	HOLDER (THIK 3MM)	1	

28

Print Date: 07-Apr-2022

PLATE-14
DIFFERENTIAL

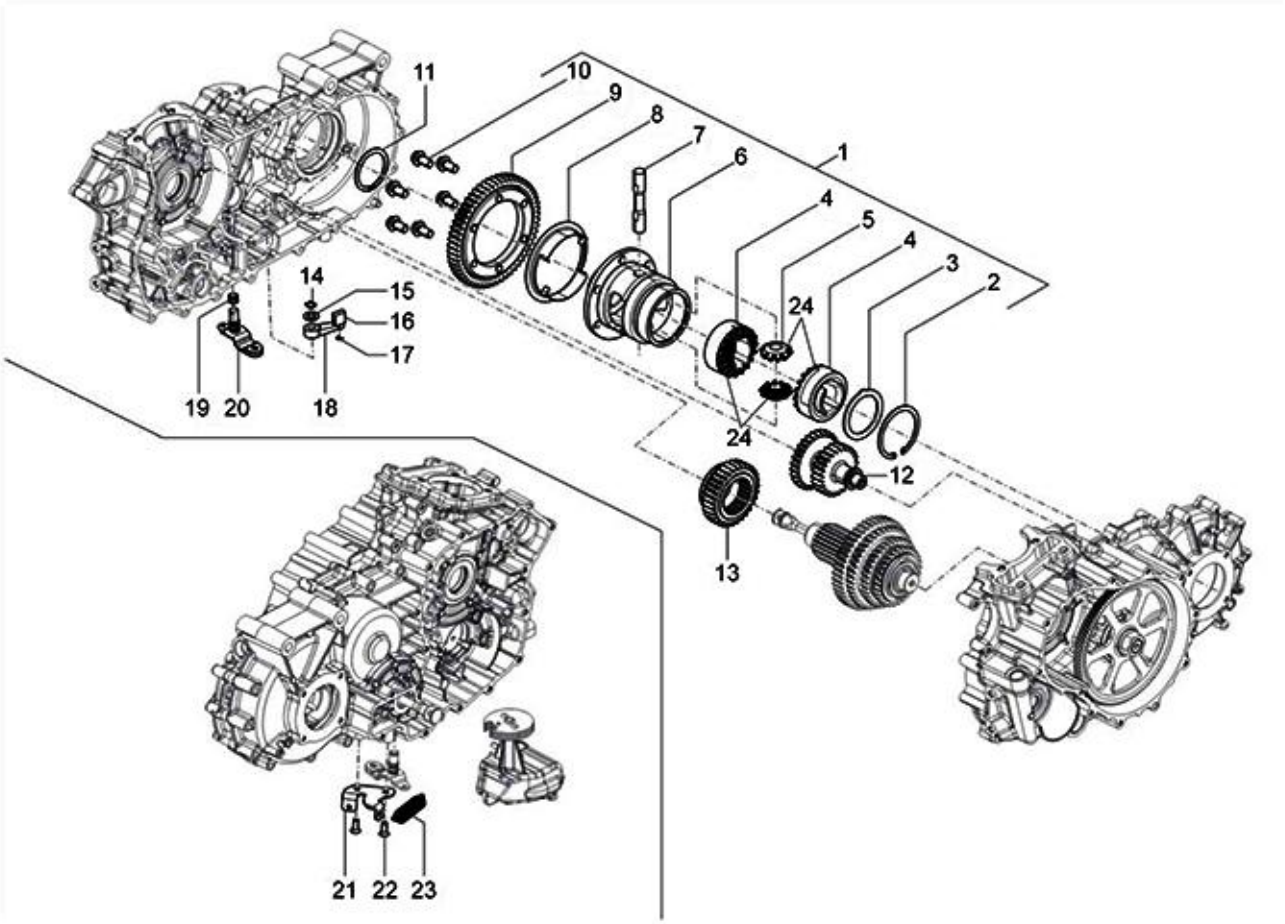
11
10
9
8
7
6
1
4
5
4
3
2
14
15
16
17
24
19
20
18
24
12
13
21
22
23

29

Print Date: 07-Apr-2022

PLATE-14
DIFFERENTIAL

Fig. No.	Part No.	Description	Qty	Remarks
1	CM308402	COMPLETE DIFFERENTIAL GEAR -CNG	1	
2	132134	CIRCLIP	1	
3	220575	WASHER 65X3	1	
4	940028	GEAR SUN AND DIFFERENTIAL GEAR	2	SERVICE IN SET (940028)
5	165155R	DIFFERENTIAL GEAR	2	SERVICE INSET (940028)
6	288730	DIFFERENTIAL CAGE	1	
7	132129	PIN	1	
8	1A011778	SATELLITE PIN RETAINER	1	
8A	1A000612	RETAINER SCREW - PRE COATED	2	
9	CM308302	DIFFERENTIAL CROWN	1	
10	1A004807	SCREW	6	
11	006450	EXT CIRCLIP DIA 48	1	
12	1A008547	REVERSE GEAR- CNG	1	
13	1A010632	SLIDING GEAR	1	
14	006410	CIRCLIP	1	
15	1A007501	PLANE WASHER	1	
16	1A007051	SLIDER	1	
17	843000500	CIRCLIP DIA.5 (EXT) TYPE C	1	
18	1A007605	GEAR SHIFTER LEVER	1	
19	1A005176	O- RING	2	
20	1A009093	INVERTER LEVER SECTOR WITH P.I.	1	
21	1A008804	REVERSE CABLE REACTION BRACKET	1	
22	1A016964	CSK PHILIPS HEAD SCREW	2	
23	127111011	REVERSE GEAR SPRING	1	
24	940028	GEAR SUN AND DIFFERENTIAL GEAR	1	

30

Print Date: 07-Apr-2022

PLATE-15
AIR FILTER ASSEMBLY

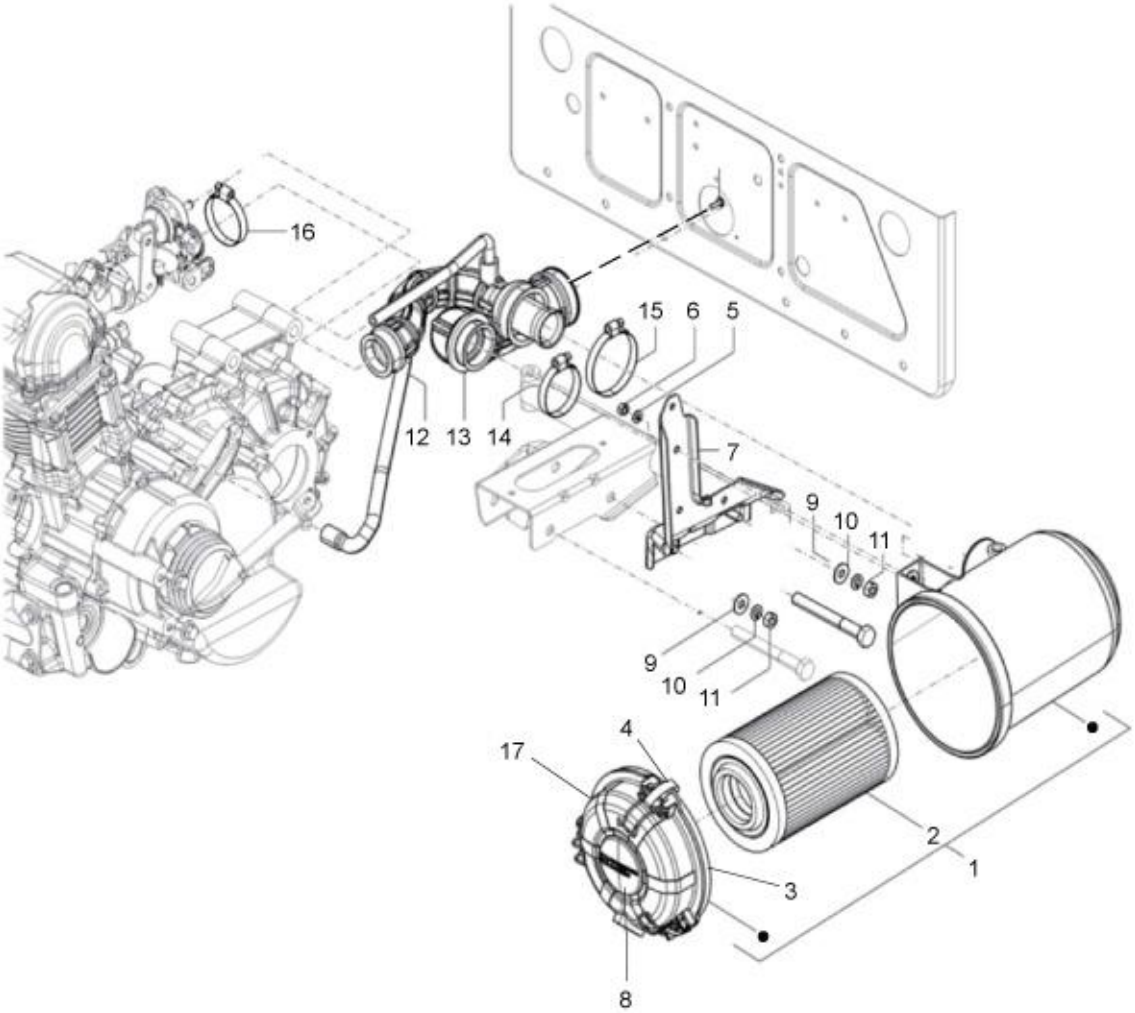
16
15
6
5
12
13
14
7
9
10
11
9
10
11
4
17
2
1
3
8

31

Print Date: 07-Apr-2022

PLATE-15

AIR FILTER ASSEMBLY

Fig. No.	Part No.	Description	Qty	Remarks
1	B073441	AIR FILTER ASSLY.W/O BKT	1	
2	B076112	AIR FILTER ELEMENT	1	
3	940072	AIR FILTER COVER GASKET	1	
4	920088	CLAMP	3	
5	16406	SPRING WASHER M6 OD12	1	
6	20106	HEX NUT M6	1	
7	B076111	BRACKET AIR FILTER SUPPORT COMPLETE	1	Under Development
8	940071	DUST VALVE	1	
9	2383	PLAIN WASHER M20X8.5X2	2	
10	16408	SPRING WASHER M8	2	
11	20108	HEX NUT M8	2	
12	1A014452	AIR BOX / THROTTLE BODY COUPLING	1	
13	1A010781	SNORKEL AIRBOX	1	
14	604756	HOSE CLIP	1	
15	604553	WORM CLIP	1	
16	604756	HOSE CLIP	1	
17	940069	AIR FILTER COVER-(UG)	1	

32

Print Date: 07-Apr-2022

PLATE-16

THROTTLE BODY - INJECTOR - INDUCTION JOINT - PETROL

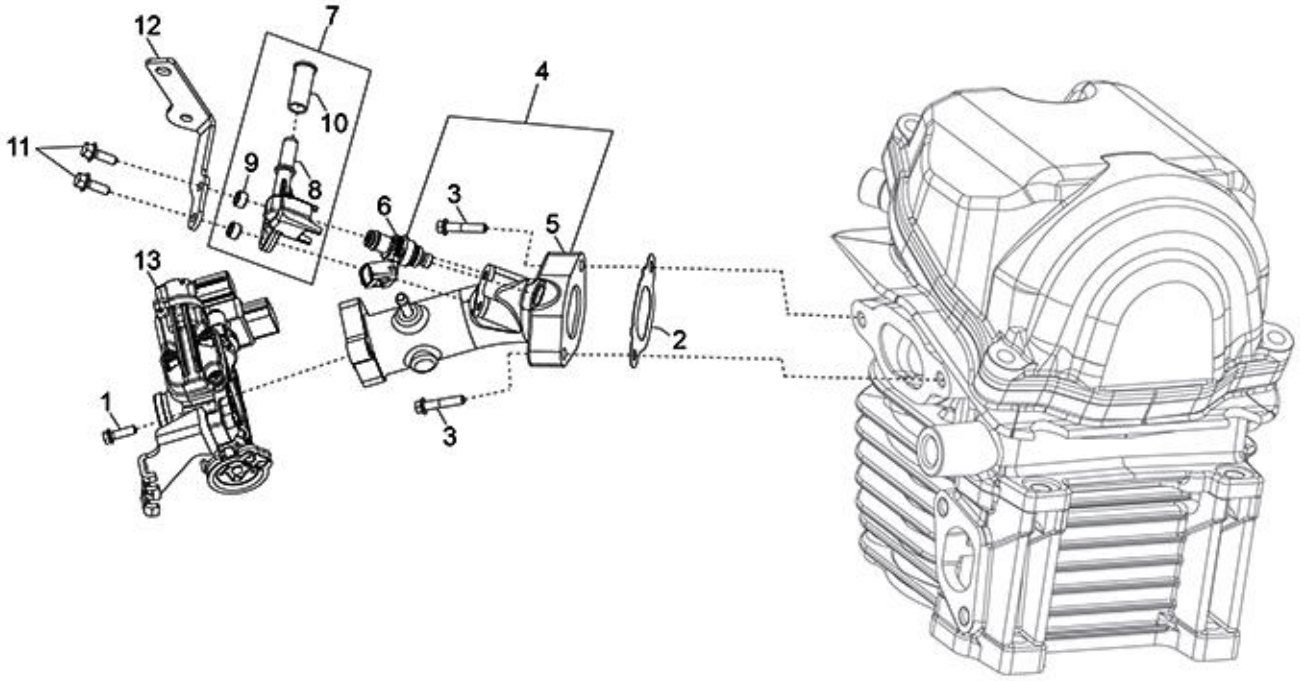
12
7
4
10
11
9
8
6
3
5
13
2
1
3

33

Print Date: 07-Apr-2022

PLATE-16

THROTTLE BODY - INJECTOR - INDUCTION JOINT - PETROL

Fig. No.	Part No.	Description	Qty	Remarks
1	018639	SCREW M6X20	1	
2	B018442	INTAKE FITTING GASKET	2	
3	B018853	FLANGED HEXAGONAL HEAD SCREW M6X30	1	
4	SP1A021976	INTAKE FITTING WITH INJECTOR_SPD	2	
5	1A019334	INTAKE FITTING	1	
6	1D000698	FUEL INJECTOR	2	
7	1A003720	COMPLETE INJECTOR SUPPORT	1	
8	1A003509	INJECTOR SUPPORT WITH I.P.	1	Not Serviceable
9	1A003649	FLANGED BUSH	1	Not Serviceable
10	829504	PLUG	1	Not Serviceable
11	1A015812	FLANGED HEXAGONAL HEAD SCREW	1	
12	6A001940	ASSY. BKT. FOR FUEL LINE SUPPORT	1	
13	1A019310	THROTTLE BODY	2	
14	1A014958	TPS/O-RING KIT	1	NI
15	1A014959	STEPPER ENGINE KIT	1	NI
16	1A014957	O-RING	1	NI -Under Development
17	1D001198	SEAL RINGS KIT	1	NI -Under Development
18	1D001157	SEAL RING (O-RING)	1	NI -Under Development
19	1D001158	SEAL RING (O-RING)	1	NI -Under Development

34

Print Date: 07-Apr-2022

PLATE-17
ENGINE MOUNTING

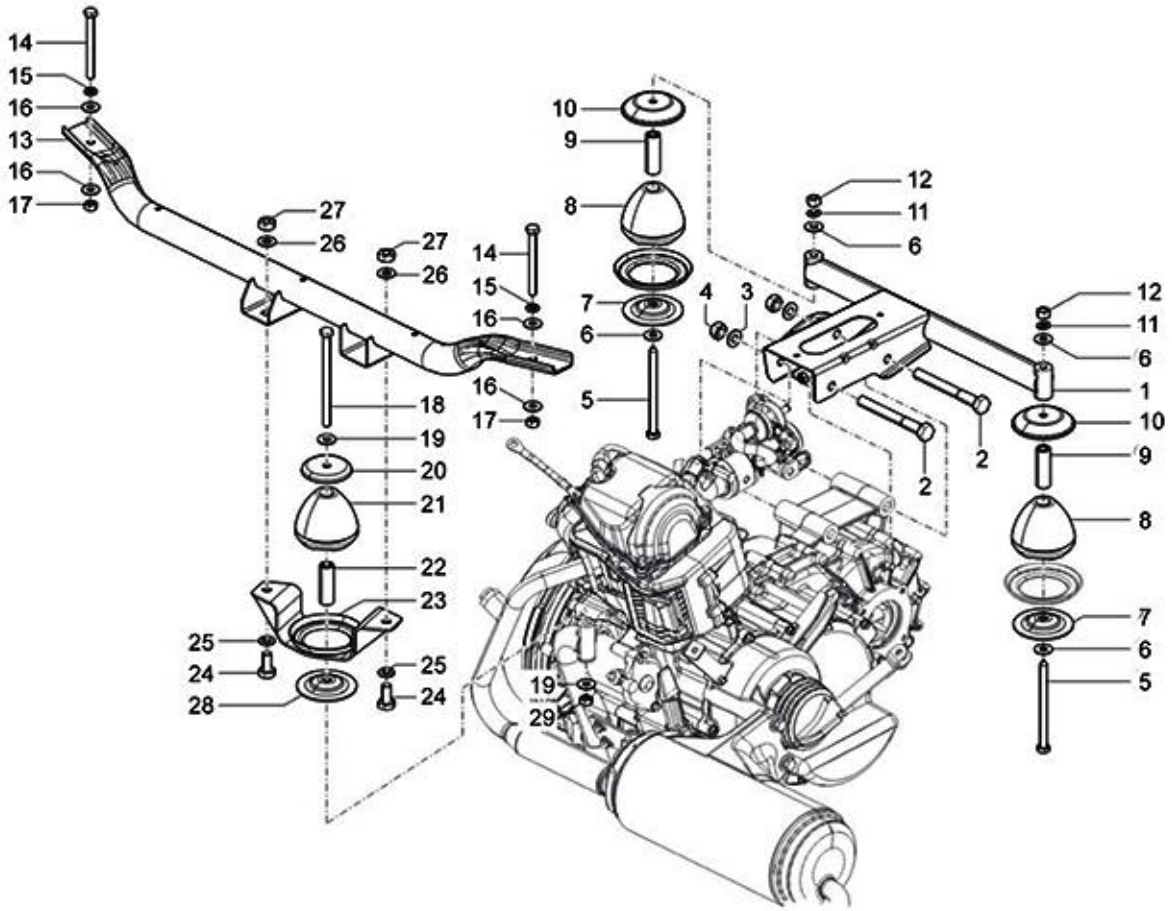
14
15
16
13
16
17
27
26
27
26
14
15
16
16
17
18
19
20
21
22
23
25
24
28
25
24
10
9
8
7
6
5
4
3
12
11
6
12
11
6
1
10
9
8
7
6
5
2
2
19
29

35

Print Date: 07-Apr-2022

PLATE-17

ENGINE MOUNTING

Fig. No.	Part No.	Description	Qty	Remarks
1	B075459	FRT CROSS MEMBER ASSY. ENG. MTG.	1	
2	568689	HEX HEAD BOLT M10X100	2	
3	286328	PLAIN WASHER 20X10.2X2	2	
4	231370	SELF BREAKING NUT M10	2	
5	604948	HEX.HDD BOLT M8 X 110 WITH POINTING	2	
6	2383	PLAIN WASHER M20X8.5X2	4	
7	569244	PLATE	2	
8	265091	DUMPER ENGINE MTG.	2	
9	569241	SPACER	2	
10	569377	PLATE	2	
11	016408	SPRING WASHER	2	
12	15335	HEX HD NUT M8	2	
13	B075595	CROSS MEMBER ENGINE MTG REAR	1	
14	B076205	HEAD BOLT (M8 X 85)	2	
15	016408	SPRING WASHER	2	
16	2383	PLAIN WASHER M20X8.5X2	4	
17	20108	HEX NUT M8	2	
18	272178	HEX. HDD BOLT M8 X 122 CL 10.9	1	
19	2383	PLAIN WASHER M20X8.5X2	2	
20	569375	PLATE	1	
21	265091	DUMPER ENGINE MTG.	1	
22	569241	SPACER	1	
23	B003286	REAR AVM SUPPORT BKT. ASSY.	1	
24	31154	HEX HDD SCREW M10X22 CL 8.8	2	
25	16410	SPRING WASHER	2	
26	286328	PLAIN WASHER 20X10.2X2	2	
27	20110	HEX NUT M10	2	
28	569244	PLATE	1	
29	20108	HEX NUT M8	1	

36

Print Date: 07-Apr-2022

PLATE-18
SILENCER

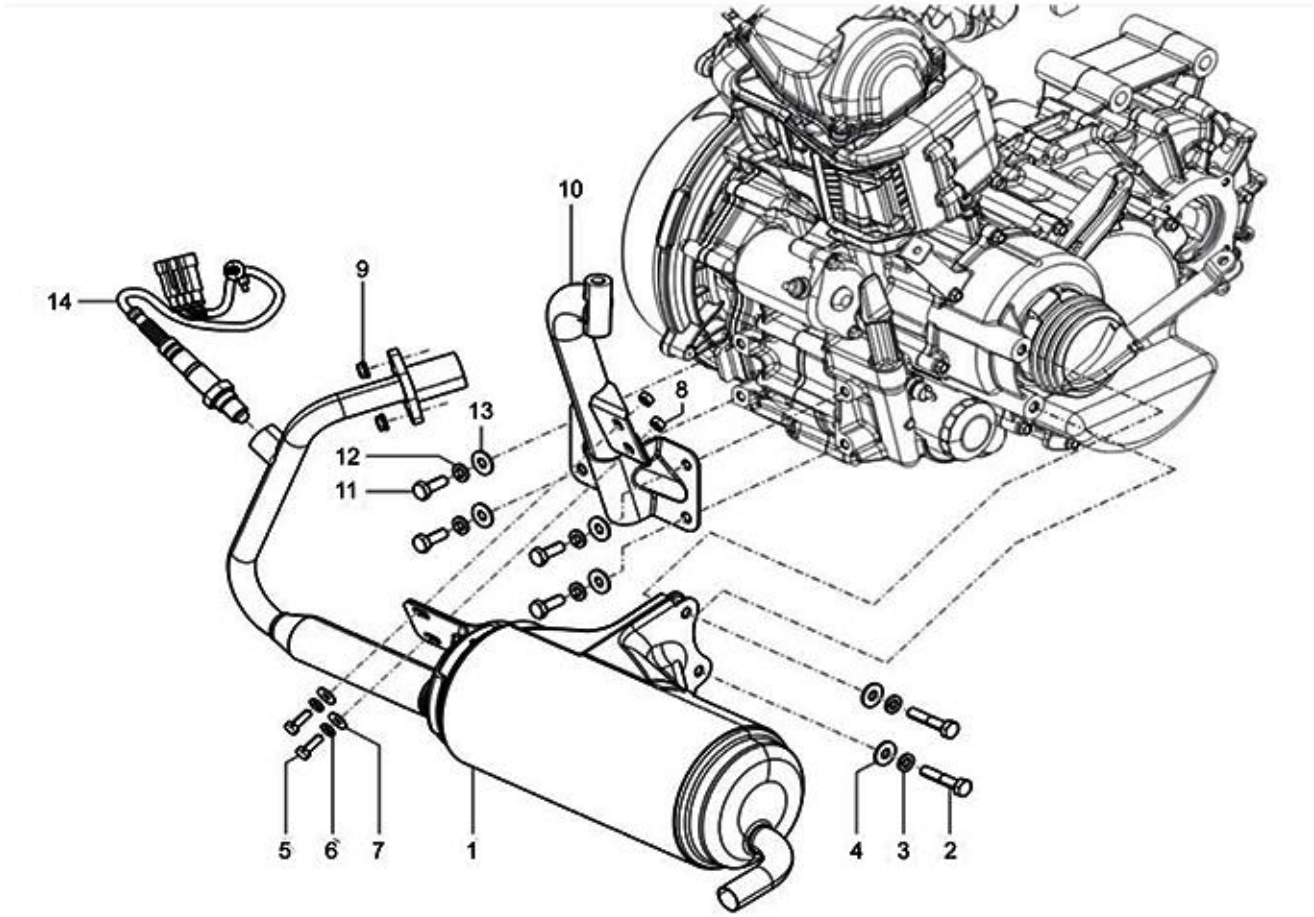
14
9
10
13
12
11
8
5
6
7
1
4
3
2

37

Print Date: 07-Apr-2022

PLATE-18
SILENCER

Fig. No.	Part No.	Description	Qty	Remarks
1	1A017410	COMPLETE MUFFLER	1	PTL
2	30074	HEX HEAD BOLT M8 X 40 CL 8.8	2	
3	16408	SPRING WASHER M8	2	
4	2383	PLAIN WASHER M20X8.5X2	2	
5	31089	HEX HEAD SCREW M6X18 CL 8.8	2	
6	16406	SPRING WASHER M6 OD12	2	
7	13880	METALIC PLAIN WASHER	2	
8	20106	HEX NUT M6	2	
9	436947	FLANGED NUT M7X1 H=8	2	
10	B075593	BKT SUB ASSLY ENGINE SUPPORT REAR	1	
11	B076143	HEX HEAD BOLT M8 X 25	4	
12	16408	SPRING WASHER M8	4	
13	2383	PLAIN WASHER M20X8.5X2	4	
14	1A014335	LAMBDA SENSOR	1	

38

Print Date: 07-Apr-2022

PLATE-19
COMPLETE H.T. COIL

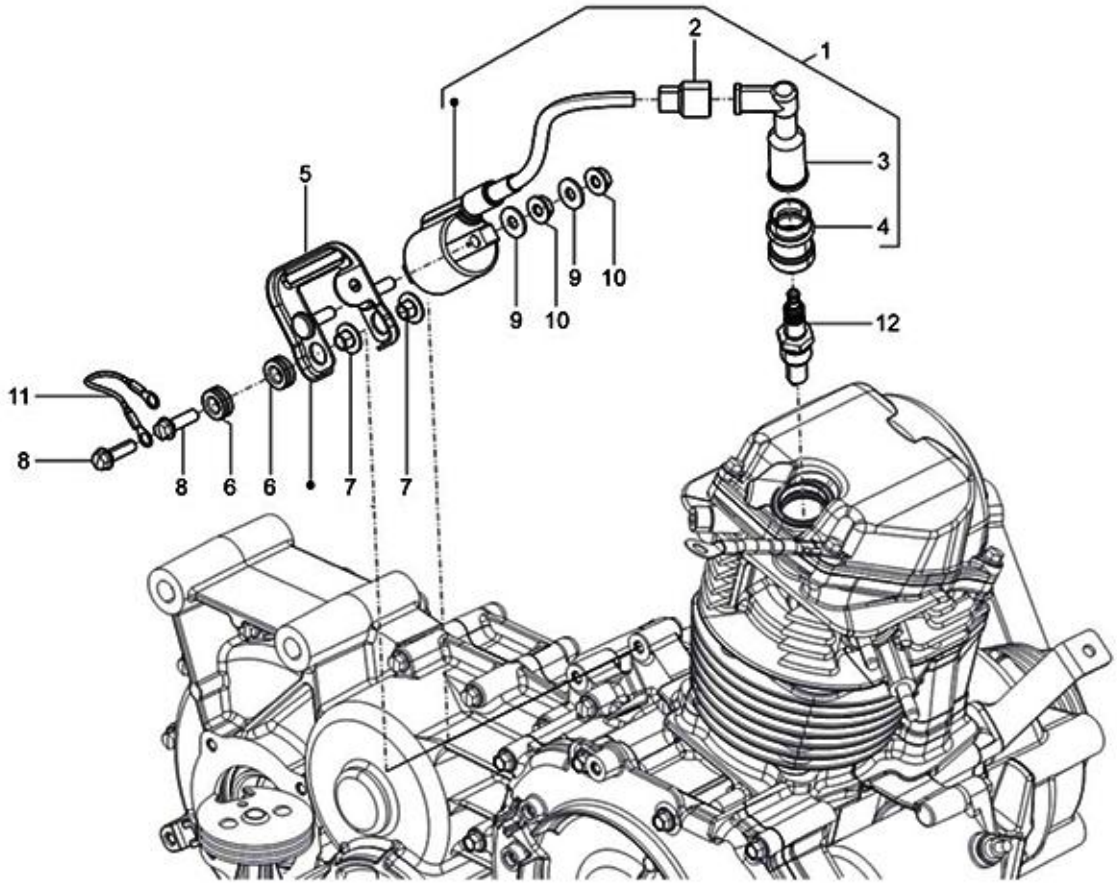
1
2
3
4
5
6
6
7
7
8
8
9
9
10
10
11
12

39

Print Date: 07-Apr-2022

PLATE-19

COMPLETE H.T. COIL

Fig. No.	Part No.	Description	Qty	Remarks
1	1A001794	COMPLETE H.T.COIL	1	PTL
2	642537	PROTECTION CAP	1	PTL
3	643149	SPARK PLUG CAP	1	PTL
4	1A001795	SPARK PLUG PROTECTION COLLAR	1	PTL
5	B016552	COIL SUPPORT BRACKET WITH I.P.	1	
6	B014063	BUFFER DAMPER	2	
7	B014066	SPACER	2	
8	018639	SCREW M6X20	2	
9	013880	PLAIN WASHER	2	
10	872816	FLANGED NUT	2	
11	1D001894	GROUND WIRE	1	
12	643367	SPARK PLUG	1	

40

Print Date: 07-Apr-2022

PLATE-20

Main frameÂ Assly & Cargo Body & Mirror

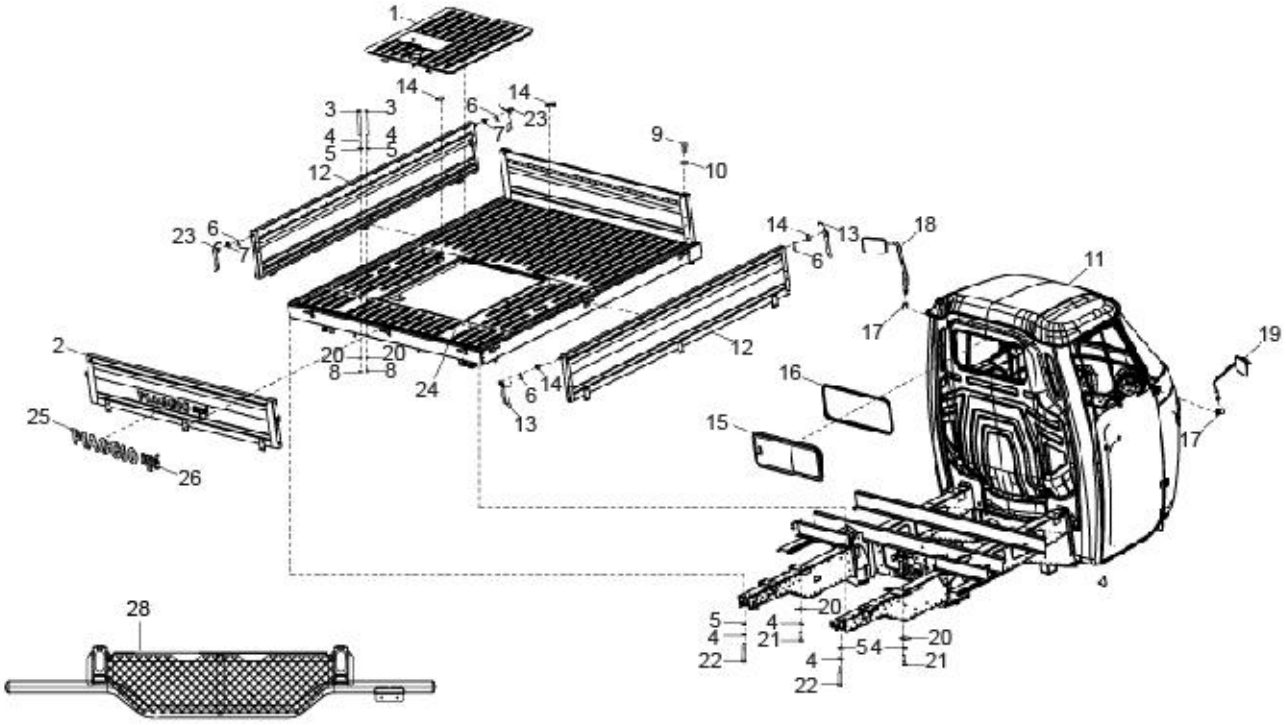
1
14
14
3
3
6
23
4
4
7
5
5
9
12
10
23
6
7
14
13
18
6
11
17
2
20
20
12
19
8
8
24
16
6
14
25
13
15
17
26
28
20
5
4
4
21
20
22
5
4
21
4
22

41

Print Date: 07-Apr-2022

PLATE-20

Main frameÂ Assly & Cargo Body & Mirror

Fig. No.	Part No.	Description	Qty	Remarks
1	B075186ED	ENGINE INSPECTION DOOR PAX CARGO	1	
2	B073526ED	TAIL GATE PANEL ASSLY APE CITY CARGO-BSIV	1	
3	568689	HEX HEAD BOLT M10X100	2	
4	16408	SPRING WASHER M8	4	
5	808000826	PLAIN WASHER M8	4	
6	12778	SPLIT PIN 3 X 20	3	
7	3057	PL. WASHER 13 X 7 X 1	3	
8	20108	HEX NUT M8	2	
9	31089	HEX HEAD SCREW M6X18 CL 8.8	4	
10	16406	SPRING WASHER M6 OD12	4	
11	6B003427BL	MAIN FRAME WITH CABIN DOORS APE CITY XTRA-BL	1	
11	6B003427BW	MAIN FRAME WITH CABIN DOORS APE CITY XTRA-BW	1	
11	6B003427BY	MAIN FRAME WITH CABIN DOORS APE CITY XTRA-BY	1	
11	6B003427CB	MAIN FRAME WITH CABIN DOORS APE CITY XTRA-CB	1	
11	6B003427CO	MAIN FRAME WITH CABIN DOORS APE CITY XTRA-CO	1	
11	6B003427EG	MAIN FRAME WITH CABIN DOORS APE CITY XTRA-EG	1	
11	6B003427GY	MAIN FRAME WITH CABIN DOORS APE CITY XTRA-GY	1	
11	6B003427NB	MAIN FRAME WITH CABIN DOORS APE CITY XTRA-NB	1	
11	6B003427PA	MAIN FRAME WITH CABIN DOORS APE CITY XTRA-PA	1	
11	6B003427PB	MAIN FRAME WITH CABIN DOORS APE CITY XTRA-PB	1	
11	6B003427WR	MAIN FRAME WITH CABIN DOORS APE CITY XTRA-WR	1	
12	B073523ED	SIDE PANEL ASSLY APE CITY CARGO -BSIV	2	
13	128805ED	RH LEVER FOR CLAMPING THE SIDE PANEL CED	2	
14	3058	PLAIN WASHER 15X8.4X1.5	6	
15	604751	CABIN REAR WINDOW	1	
16	604761	PACKING SLIDING GLASS WINDOW	1	
17	643613	REAR VIEW MIRROR ATTACHMENT	2	
18	643685R	OUTER REAR VIEW MIRROR LH ASSY.	1	
19	643684R	OUTER REAR VIEW MIRROR RH ASSY.	1	
20	604785	SUPPORT PLATE	4	
21	30072	HEX HEAD BOLT M8 X 35	2	
22	B076205	HEAD BOLT (M8 X 85)	2	
23	128804ED	LH LEVER FOR CLAMPING THE SIDE PANEL CED	2	
24	B076050BL	APE CITY CARGO BODY ASSY PUP- PETROL-BL	1	
24	B076050BW	APE CITY CARGO BODY ASSLY PUP - PETROL-BW	1	

42

Print Date: 07-Apr-2022

PLATE-20

Main frameÂ Assly & Cargo Body & Mirror

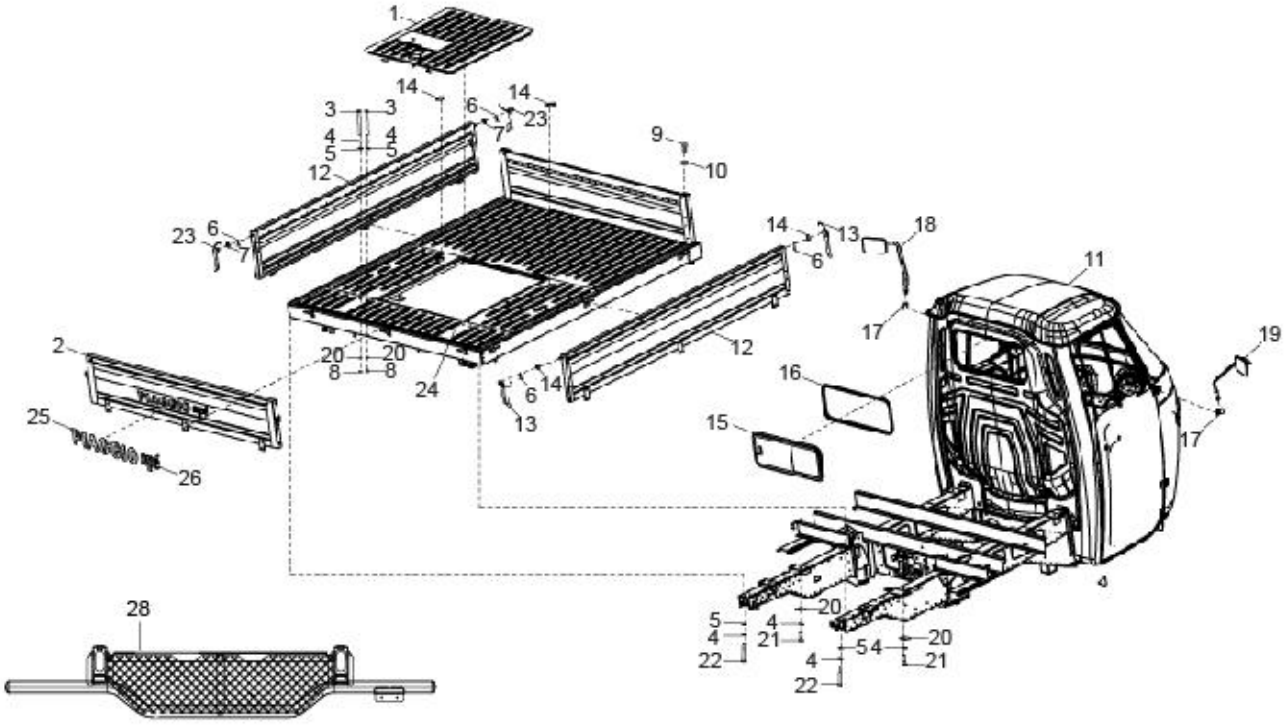
1
14
14
3
3
6
23
4
4
7
5
5
9
12
10
23
6
7
14
13
18
6
11
17
2
20
20
12
19
8
8
24
16
6
14
25
13
15
17
26
28
5
20
4
4
21
20
22
5
4
21
4
22

43

Print Date: 07-Apr-2022

PLATE-20

Main frameÂ Assly & Cargo Body & Mirror

Fig. No.	Part No.	Description	Qty	Remarks
24	B076050BY	APE CITY CARGO BODY ASSY PUP- PETROL-BY	1	
24	B076050CB	APE CITY CARGO BODY ASSLY PUP - PETROL-CB	1	
24	B076050CO	APE CITY CARGO BODY ASSLY PUP - PETROL-CO	1	
24	B076050EG	APE CITY CARGO BODY ASSLY PUP - PETROL-EG	1	
24	B076050GY	APE CITY CARGO BODY ASSLY PUP - PETROL-GY	1	
24	B076050NB	APE CITY CARGO BODY ASSY PUP- PETROL-NB	1	
24	B076050PA	APE CITY CARGO BODY ASSY PUP- PETROL-PA	1	
24	B076050PB	APE CITY CARGO BODY ASSY PUP- PETROL-PB	1	
24	B076050WR	APE CITY CARGO BODY ASSY PUP- PETROL-WR	1	
25	662323	PIAGGIO TAIL GATE (YESHSHREE) STICKER FOR LIGHT COLOUR SHADE	1	
26	660175	APE STICKER FOR ROLLED BACK PANEL-RED	1	
27	661262	YELLOW REFLECTIVE TAPE	1	NI
28	B077327	REAR VISUAL BARRIER ASSLY	1	

44

Print Date: 07-Apr-2022

PLATE-21

DOORS, TOOLS AND WHEELS

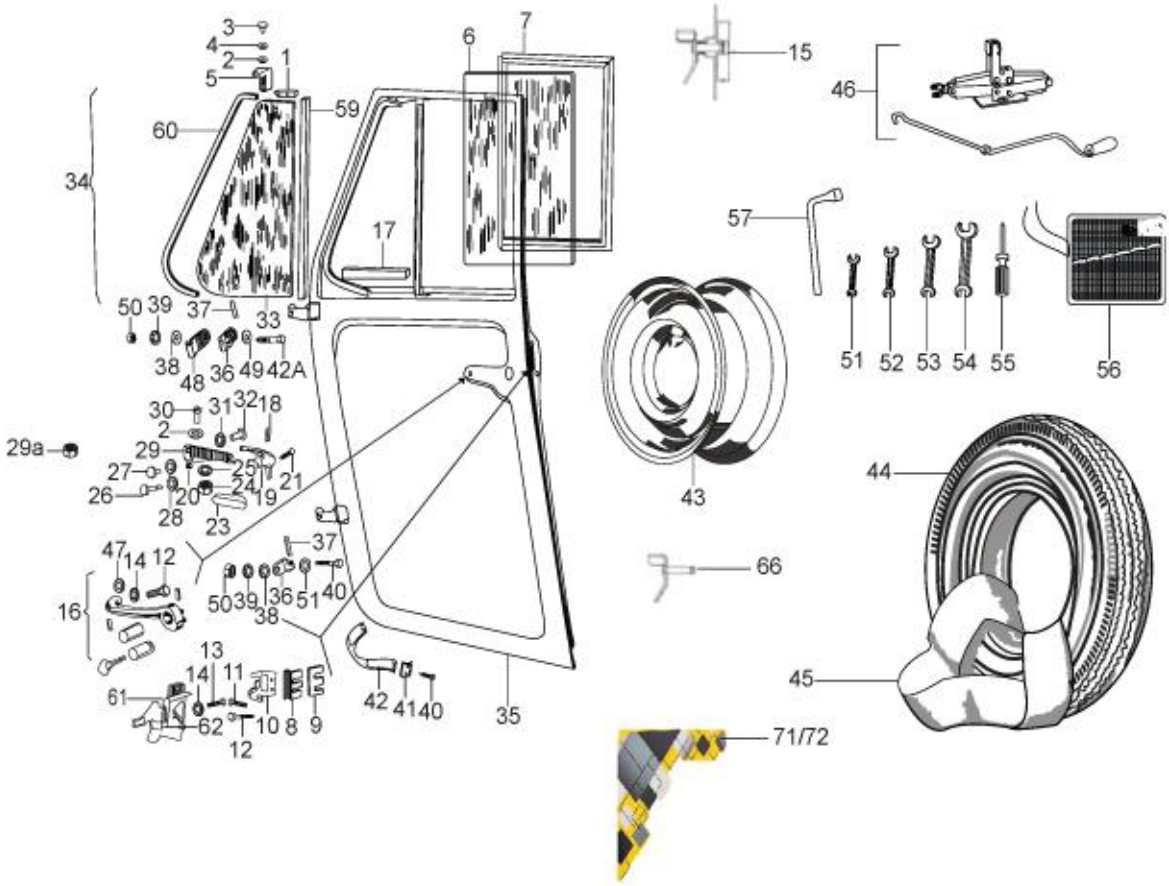
3
4
2
5
1
6
7
15
46
59
60
34
17
57
50 39 37 33
38 48 36 49 42A
51 52 53 54 55
56
30 31 32 18
2
29a
29
27 25 21
26 20 24 19
28 23
43
44
47 14 12
37
16
50 39 36 51 40
38
66
13
14 11
61
62 10 8 9
12
42 41 40
35
45
71/72

45

Print Date: 07-Apr-2022

PLATE-21

DOORS, TOOLS AND WHEELS

Fig. No.	Part No.	Description	Qty	Remarks
1	183077	UPPER PACKING R.H. DOOR RABBET	1	
1	163660	DEFLECTOR PANE RABBET L.H. UPPER PACKING	1	
2	97756	METALLIC PLAIN WASHER	4	
2	6965	SPRING WASHER DIA 5	2	
3	5745	RIVET DIA.7MM	2	
4	6078	PLAIN WASHER 12 X 5.2 X 1	2	
5	108800	UPPER CLAMP OF RIGHT AIR DEFLECTOR	1	
5	152025	UPPER CLAMP OF L.H. AIR REFLECTOR	1	
6	163661	FIXED GLASS FOR THE WINDOW	2	
7	163663	GASKET, WINDOW GLASS	2	
8	140603	SECURITY LOCK CYLINDER (SHIM PLATE)1.0TH	2	
9	193724	PLATE(OPTION SHIM PLATE)	2	
10	182663	BLOCK COMPLETE OF COLLISION DOOR LOCK LH	1	
10	182662	BLOCK COMPLETE OF COLLISION DOOR LOCK RH	1	
11	569156	CSK SCREW (BLOCK CLOSING DOOR)	2	
12	569157	CSK SCREW (BLOCK CLOSING DOOR)	2	
13	30242	SLOT CH. HD. SCREW	3	
14	12546	PLAIN WASHER / MULTI TOOTH LOCK WASHER M5	8	
15	182660R	COMPLETE LOCK OF RH DOOR	1	
15	182661R	COMPLETE LOCK OF LH DOOR	1	
16	B024733	HANDLE WITH PUSH BUTTON LH WITH KEY	1	
16	B024734	HANDLE WITH PUSH BUTTON RH WITH KEY	1	
17	163659	DEFLECTOR PANE RABBET LOWER GASKET	2	
18	8808	SPRING PIN 2.5 X 14	2	
19	B003864	DEFL CLOSING LEVER RH -(PLASTIC)	1	
19	B003865	DEFL CLOSING LEVER LH (PLASTIC)	1	
20	116971	RUBBER GROMMET	2	
21	15727	PAN SELF TAPPING SCREW	2	
22	62961	MAIN SPRING FOR LEVER	2	
23	B042814	COLLISION FOR LEVER	2	
23A	97756	METALLIC PLAIN WASHER	2	
24	20108	HEX NUT M8	2	
25	64263	WINDOW FRICTION WASHER	2	
26	604558	PIVOT FOR LEVER FOR CLOSING DOORS	2	
27	108804	SCREW WITH WIDE HEAD (MALE)	4	

46

Print Date: 07-Apr-2022

PLATE-21

DOORS, TOOLS AND WHEELS

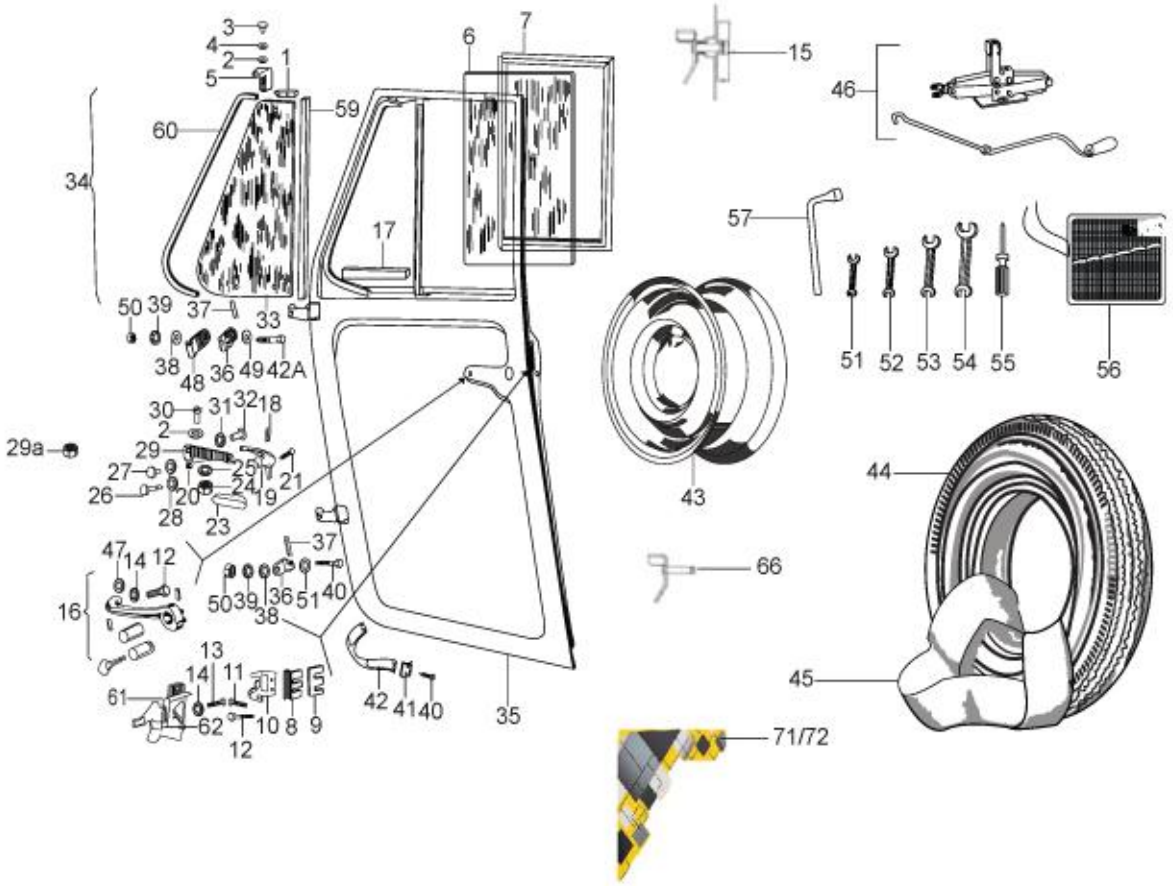
3
4
2
5
1
6
7
15
46
59
60
34
17
57
50 39 37 33
38 48 36 49 42A
51 52 53 54 55
56
30 31 32 18
2
29a
29
27 25 21
26 20 24 19
28 23
43
44
47 14 12
37
16
50 39 36 51 40
38
66
13
14 11
61
62 10 8 9
12
42 41 40
35
45
71/72

47

Print Date: 07-Apr-2022

PLATE-21

DOORS, TOOLS AND WHEELS

Fig. No.	Part No.	Description	Qty	Remarks
28	13935	WASHER	2	
29	108801	LOWER BKT.FOR CONNECTING R.H.DEFLECTOR	1	
29	109263	LOWER BKT.FOR CONNECTION L.H. DEFLECTOR	1	
29A	12136	NUT / NYLOCK NUT M5	2	
30	31058	HEX HEAD SCREW M5 X 16 CC8.8	2	
31	6177	PLAIN WASHER 16 X 8.5 X 1	1	
32	108805	SCREW WITH WIDE HEAD (FEMALE)	2	
32	604812	LARGE HEAD SCREW	2	
33	163665	GLASS, VENT	2	
34	163666SP	RH; VENT WINDOW ASSY.	1	
34	163667SP	LH; VENT WINDOW ASSY.	1	
35	B002847	RH DOOR SUB ASSLY (CED)	1	
35	B002848	LH DOOR SUB ASSLY (CED)	1	
36	632238	DOOR HINGE ASSLY UPPER	4	
37	8847	SPRING PIN 6X64	4	
38	13812	METALLIC PLAIN WASHER	2	
38	13861	PLAIN WASHER 20X8.2X2.5	2	
39	12540	SPRING WASHER M8	4	
40	8451	PAN SELF TP SCREW 6 SGX13 AB	8	
41	89281	BLOCK PLATE STRAP	4	
42	B074173	STOP BELT FOR DOOR	1	
42A	568692	PAN SELF TAP SCREW 6SG X 16AB	4	
43	6C000430	WHEEL RIM ASSY	1	
44	B001315	TYRE (4.0 X 8,4 PR)	1	
45	B001316	INNER TUBE FOR TYRE 4.0 X 8 INCH	4	
46	B076650R	JACK ASSLY	1	
47	6018	PL. WASHER	2	
47A	604560	SCREW TERMINAL ASSY. - GEAR CONTROL	2	
48	605389	HINGE	2	
49	140728	PLAIN WASHER 8.5 X 24 X 3	2	
50	20108	HEX NUT M8	4	
51	567454	DOUBLE END SPANNER7/8	1	
52	567455	DE SPANNER 10X13 IS:2018(ZN PLATING)	1	
53	567456	DOUBLE END SPANNER 12/14	1	
54	567457	DE SPANNER 17/19	1	

48

Print Date: 07-Apr-2022

PLATE-21

DOORS, TOOLS AND WHEELS

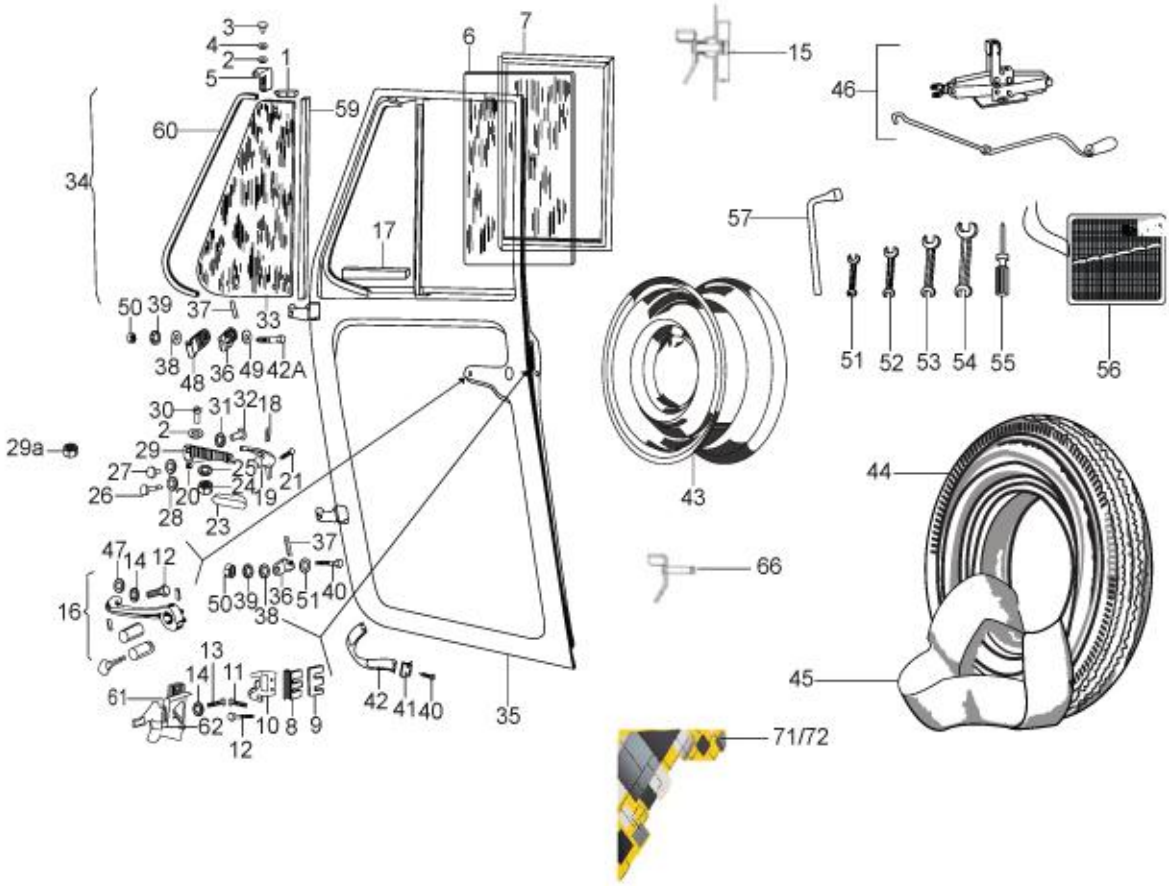
3
4
2
5
1
6
7
15
46
59
60
34
17
57
50 39 37 33
38 48 36 49 42A
51 52 53 54 55
56
30 31 32 18
2
29a
29
27 25 21
26 20 24 19
28 23
43
44
47 14 12
37
16
50 39 36 51 40
38
66
13
14 11
61
62 10 8 9
12
42 41 40
35
45
71/72

49

Print Date: 07-Apr-2022

PLATE-21

DOORS, TOOLS AND WHEELS

Fig. No.	Part No.	Description	Qty	Remarks
55	567458	SCREW DRIVER (-)&(+) 80	1	
56	604707	TOOL BAG	1	
57	567459	L TYPE WHEEL SPANNER (A/F19)	1	
58	E500405518	STARTING ROPE	1	Not applicable
58	192020017	STARTING ROPE	1	Not applicable
58A	569193	FIRST AID KIT	1	
59	163782	DEFLECTOR PANE RABBET REAR GASKET	2	
60	163784	DEFLECTOR PANE RABBET FRONT GASKET	2	
61	604689	STOPPER ASSLY RH	1	
61	604690	STOPPER ASSLY LH	1	
62	108356	SPRING FOR LOCK	1	
62	115531	SPRING FOR R.H. LOCK	1	
63	116334	L.H.DOOR GUIDE BOX ASSY	1	
64	30242	SLOT CH. HD. SCREW	3	
65	190255	GROMMET (LONG MEMBER)	1	
66	109121	LEVER COMPLETE OF LH LOCK	1	
67	116333	BOX FOR GUIDE COMPLETE OF RH DOOR	1	
68	109120	LEVER COMPLETE FOR R.H. LOCK	1	
69	B042703	TOOLS KIT (APE PAXX PETROL/CNG/LPG)	1	
70	30074	HEX HEAD BOLT M8 X 40 CL 8.8	1	
71	6B000250	DOOR DECAL LH	1	Not applicable
72	6B000251	DOOR DECAL RH	1	Not applicable

50

Print Date: 07-Apr-2022

PLATE-22
TOOLS AND WHEELS

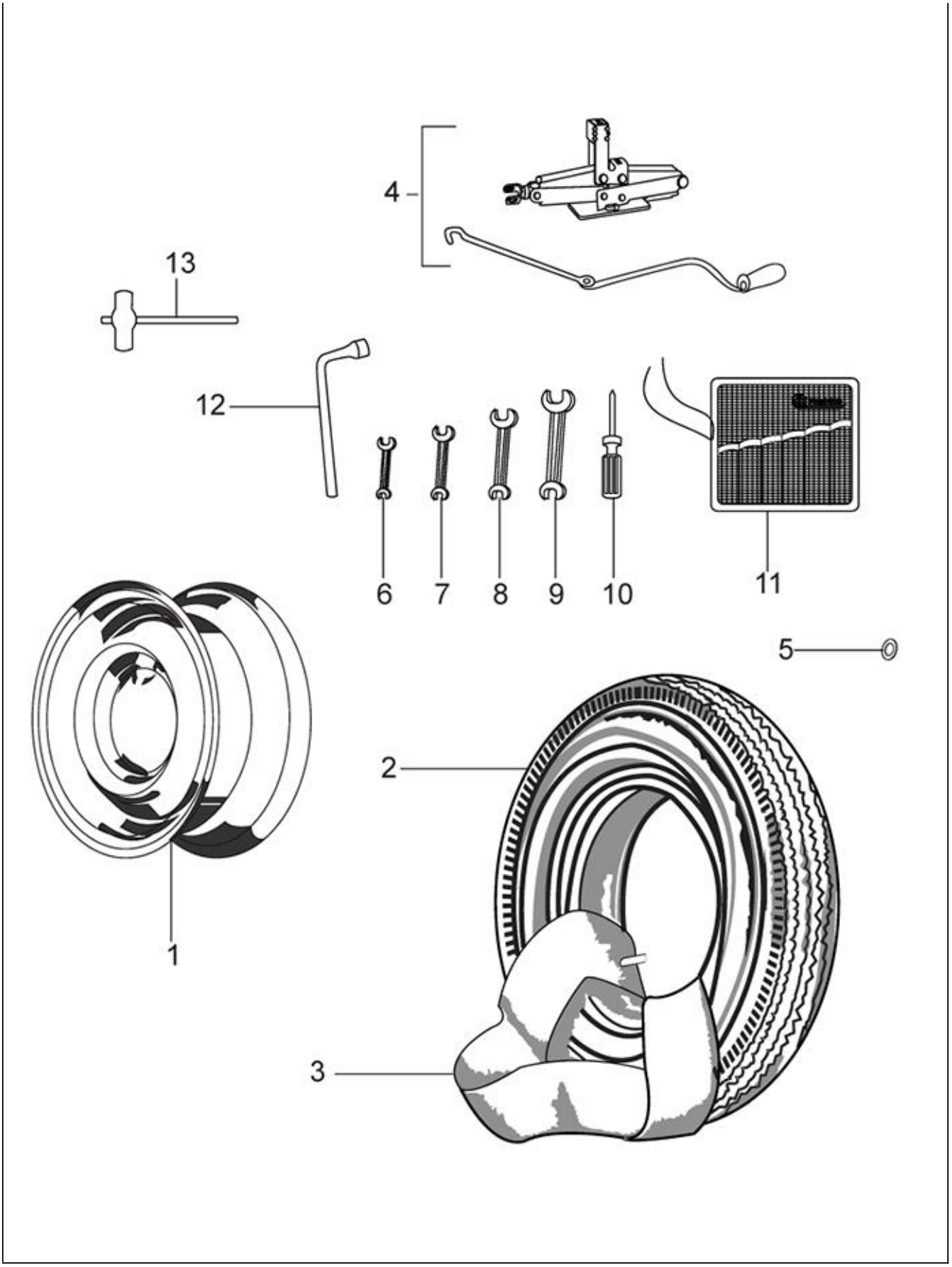
4
13
12
6
7
8
9
10
11
5
2
1
3

51

Print Date: 07-Apr-2022

PLATE-22

TOOLS AND WHEELS

Fig. No.	Part No.	Description	Qty	Remarks
1	6C000430	WHEEL RIM ASSY	4	
2	B001315	TYRE (4.0 X 8,4 PR)	4	
3	B001316	INNER TUBE FOR TYRE 4.0 X 8 INCH	4	
4	B076650R	JACK ASSLY	1	
5	6018	PL. WASHER	2	
6	567454	DOUBLE END SPANNER7/8	1	
7	567455	DE SPANNER 10X13 IS:2018(ZN PLATING)	1	
8	567456	DOUBLE END SPANNER 12/14	1	
9	567457	DE SPANNER 17/19	1	
10	567458	SCREW DRIVER (-)&(+) 80	1	
11	604707	TOOL BAG	1	
12	567459	L TYPE WHEEL SPANNER (A/F19)	1	

52

Print Date: 07-Apr-2022

PLATE-23

HEAD LAMP & FRONT FACIA

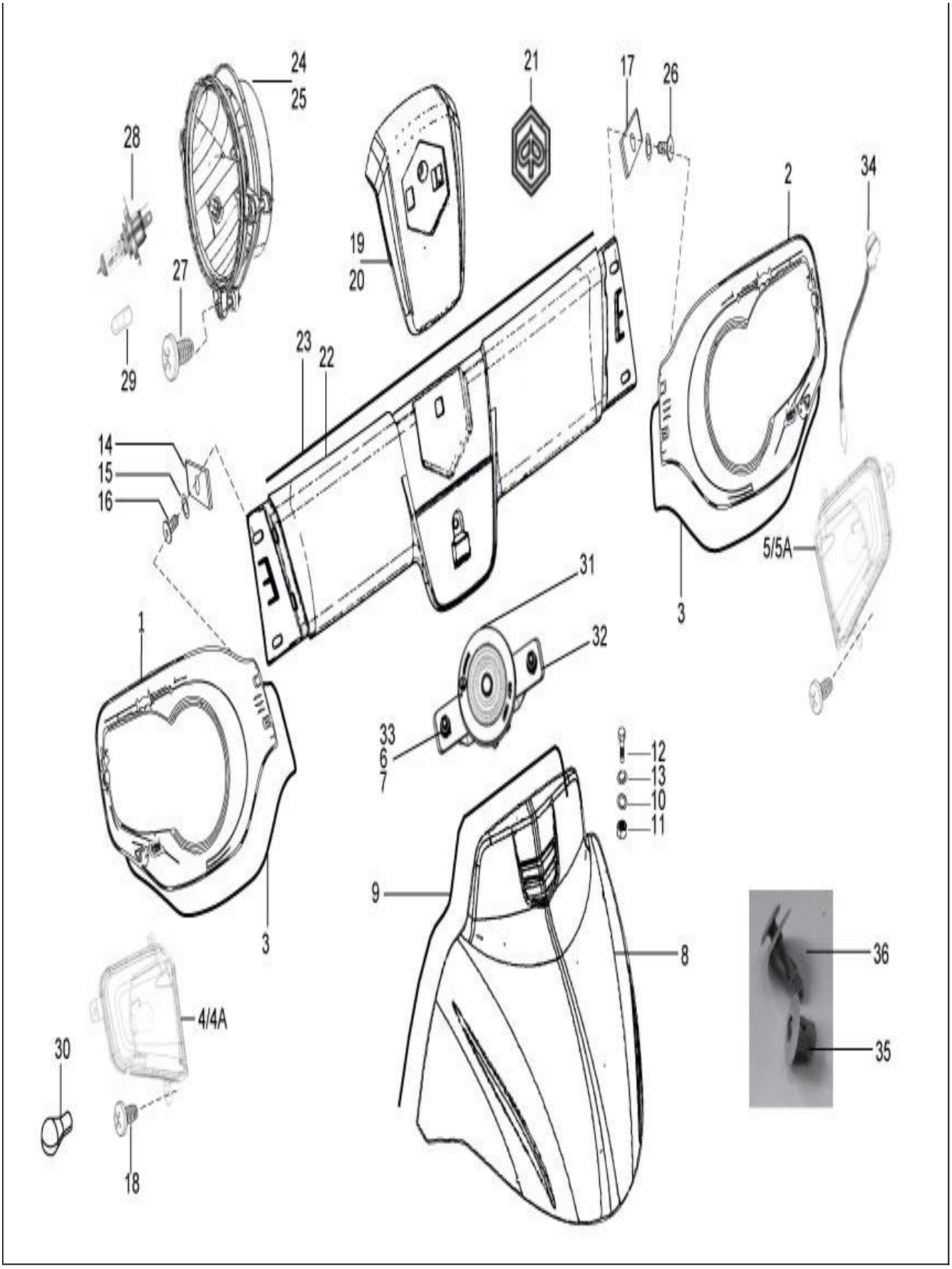
24
25
21
17
26
28
2
34
19
20
27
29
23
22
14
15
16
5/5A
31
3
1
32
33
6
7
12
13
10
11
9
8
36
35
4/4A
30
18

53

Print Date: 07-Apr-2022

PLATE-23

HEAD LAMP & FRONT FACIA

Fig. No.	Part No.	Description	Qty	Remarks
1	B074434	BEZEL_HEADLAMP BLINKER (RH)	1	
2	B074433	BEZEL_HEADLAMP BLINKER (LH)	1	
3	B073969	HL BEZEL BEADING	2	
4	6D000146R	FRONT DIRECTION INDICATORS RH	1	
4A	B078272	BLINKER HOUSING (RH)-(HOUSING + GLASS)	1	
5	6D000145R	FRONT DIRECTION INDICATORS LH	1	
5A	B078274	BLINKER HOUSING (LH)-(HOUSING + GLASS)	1	
6	3056	PLAIN WASHER M6 OD12	4	
7	20106	HEX NUT M6	4	
8	B073882WR	FRONT MUDGUARD - PAINTED-WR	1	
8	B073882BW	FRONT MUDGUARD - PAINTED-BW	1	
8	B073882GY	FRONT MUDGUARD - PAINTED - GY	1	
8	B073882CB	FRONT MUDGUARD - PAINTED -CB	1	
8	B073882EG	FRONT MUDGUARD - PAINTED - EG	1	
8	B073882NB	FRONT MUDGUARD - PAINTED - NB	1	
8	B073882BL	FRONT MUDGUARD - PAINTED - BL	1	
9	B074063	GASKET FOR FRONT MUDGUARD	1	
10	013880	PLAIN WASHER	8	
11	20106	HEX NUT M6	4	
12	31089	HEX HEAD SCREW M6X18 CL 8.8	4	
13	78307	BENT SPRING WASHER M6	4	
14	8080	SPRING PLATE	4	
15	3055	PLAIN WASHER M5	10	
16	660168	PAN SELF TP. SCREW 10 SGX13AB	5	
17	157716	SCREW ANCHORE	8	
18	B074539	PHILIPS COUNTER HEAD SCREW	4	
19	B073875	LOGO SUPPORT - NOT PAINTED	1	
20	B073875SL	LOGO SUPPORT - PAINTED	1	
21	B076120	HEXAGONAL EMBLEM	1	
22	B073872	CENTRAL FACIA	1	
23	B073970	CENTRAL FACIA BEADING UPPER	1	
24	6D000143R	HEAD LAMP ASSLY LH - NUOVO	1	
25	6D000144R	HEAD LAMP ASSLY - RH (NUOVO)	1	
26	119735	PROTECTION SECURING SPRING/SPR. FOR PROTECTION	2	
27	15900	HEAD LAMP SECURING SCREW/PAN SELF TAP SCREW	6	

54

Print Date: 07-Apr-2022

PLATE-23

HEAD LAMP & FRONT FACIA

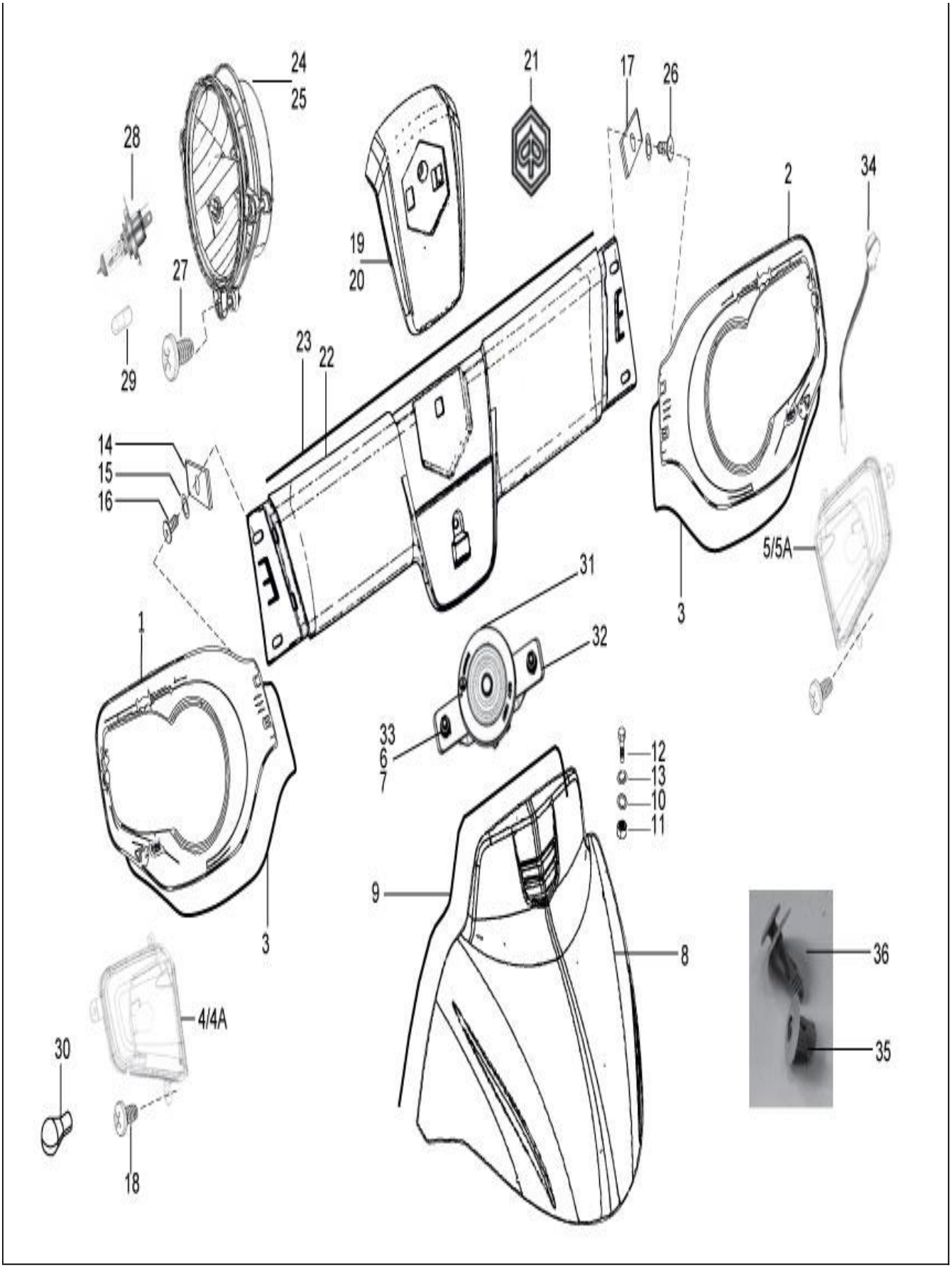
24
25
21
17
26
28
2
34
19
20
27
29
23
22
14
15
16
5/5A
31
3
1
32
33
6
7
12
13
10
11
9
8
36
35
3
4/4A
30
18

55

Print Date: 07-Apr-2022

PLATE-23

HEAD LAMP & FRONT FACIA

Fig. No.	Part No.	Description	Qty	Remarks
28	B078286R	HS1_BULB (12 V _35/35W	2	
29	567593	BULB 12V 5W / LAMP 4W	2	
30	925581	INDICATOR LIGHT BULB 12V 21W AMBER COLOUR	2	
31	B074033	HORN ASSLY(DIA 70)	1	
32	B073953	HORN MTG. BKT S/A	1	
33	016406	SPRING WASHER	4	
34	940162	BULB HOLDER WITH PIGTAILS	2	
35	B076606	GROMMET	4	
36	B076605	PIN	4	

56

Print Date: 07-Apr-2022

PLATE-24

Windshield /Glass/ Seats/ Carpets/Mirrors &Engine Door.

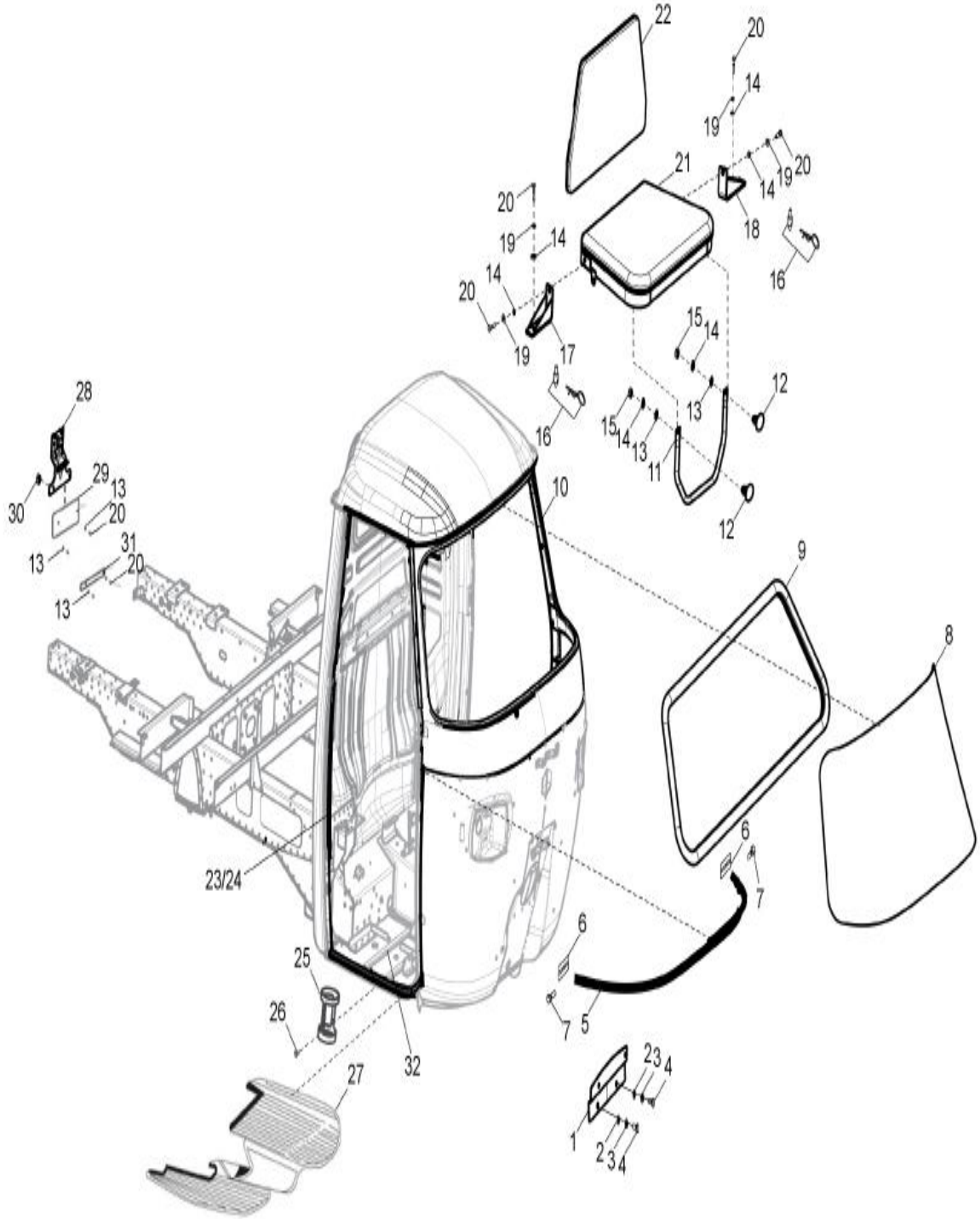
22
20
14
19
21
20
19
14
18
16
20
14
19
17
15
14
12
13
16
15
14
13
11
12
28
29
13
30
20
31
13
20
13
10
9
8
6
7
23/24
6
25
7
5
26
32
27
23
4
1
2
3
4

57

Print Date: 07-Apr-2022

PLATE-24

Windshield /Glass/ Seats/ Carpets/Mirrors &Engine Door.

Fig. No.	Part No.	Description	Qty	Remarks
1	6B001140	BRACKET ASSLY FRONT HSRP MTG	1	DOM
2	3056	PLAIN WASHER M6 OD12	2	
3	16406	SPRING WASHER M6 OD12	2	
4	31088	HEX HD SCREW M6 X 16 CL 8.8 (811061623)	2	
5	6B001946	RIM COVER JOINT (JET BLACK)	1	
6	6B001947	TERMINAL	2	
7	15911	PAN SELF TAP SCREW 8SG X 16 AB	2	
8	6B001921	LAMINATED WINSHIELD GLASS	1	Appli.forÃ?Â New Windshield 6B000142ED
8	587963	LAMINATED WINSHIELD GLASS	1	Appli.for old Windshield B076098ED
9	109012	WIND SHIELD PACKING	1	
10	6B000387ED	WINDSHIELD ASSLY(MODI.) - ED	1	Appli.forÃ?Â New Windshield Glass 6B001921
10	B076098ED	WINDSCREEN FRAME ASSLY - C/O 501 BSIV DSL	1	Appli.for old Windshield Glass 587963
11	NS	NOT SERVICEABLE	1	
12	31119	HEX HD SCREW M8 X 25	2	
13	3058	PLAIN WASHER 15X8.4X1.5	4	
14	16408	SPRING WASHER M8	8	
15	20108	HEX NUT M8	2	
16	6B001486	PIN WITH HOLE	2	Not Servicable
17	NS	NOT SERVICEABLE	1	
18	NS	NOT SERVICEABLE	2	
19	13958	PLAIN WASHER	4	
20	30072	HEX HEAD BOLT M8 X 35	6	
21	645128	DRIVER SEAT ASSLY.	1	including pipe
22	644852	DRIVER BACK REST (CARGO) (VE)	1	
23	6B001204R	DOOR BEADING CARGO LH	1	
24	6B001207R	DOOR BEADING CARGO RH	1	
25	645141	BOTTLE CARRIER STAND	1	
26	660168	PAN SELF TP. SCREW 10 SGX13AB	2	
27	B075254	FARE METERÂ Â MTG. BKT.	1	
28	6B001118	BRACKET ASSLY-REAR HSRP MTG	1	
29	B006582	REGISTRATION NUMBER PLATE (BLACK)	1	
30	261323	NUT	2	
31	6B001140	BRACKET ASSLY FRONT HSRP MTG	1	DOM
32	587905PC	CABIN FLOOR SUB-ASSY.	1	

58

Print Date: 07-Apr-2022

PLATE-25
MUDGUARD & STICKER

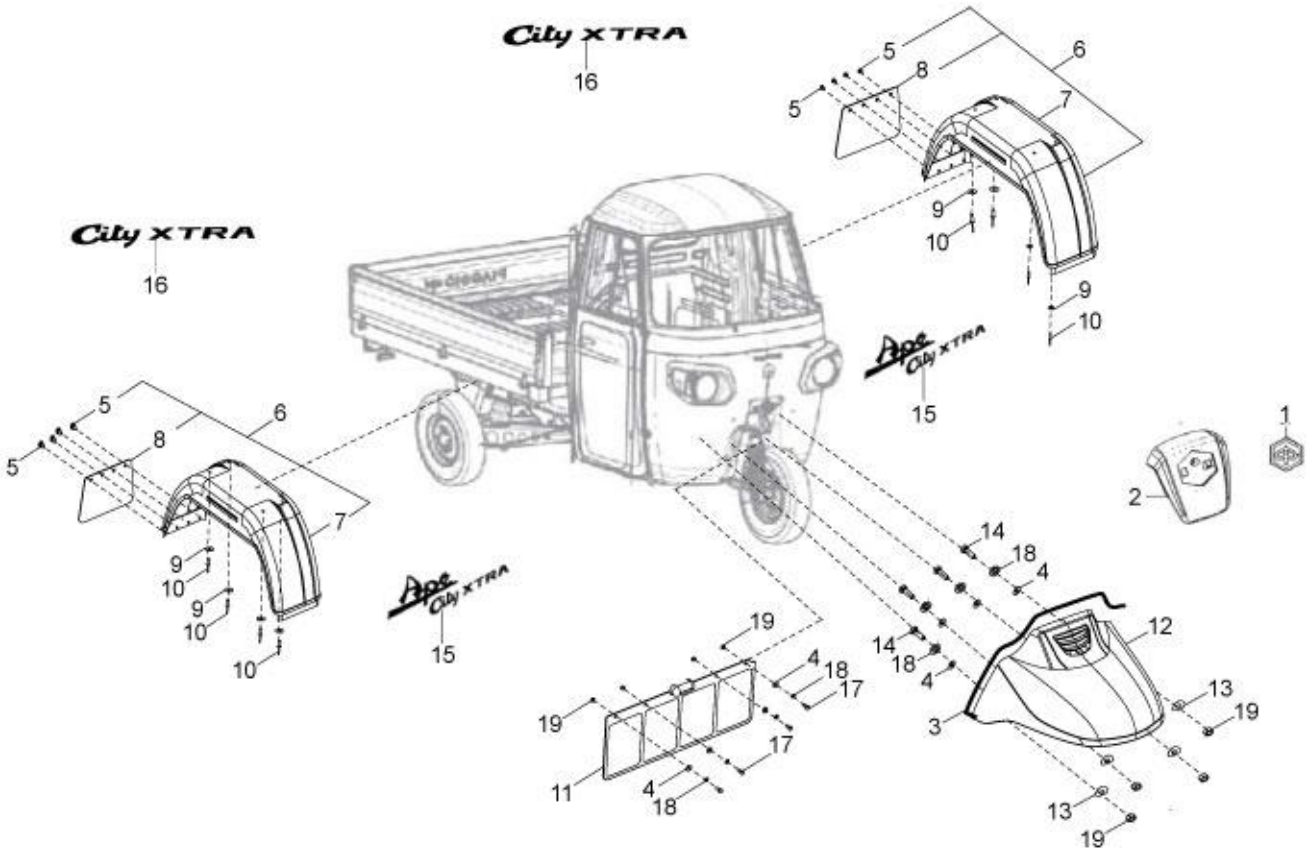
City XTRA
16
City XTRA
16
Ape City XTRA
15
Ape City XTRA
15
1
2
3
4
5
6
7
8
9
10
11
12
13
14
17
18
19

59

Print Date: 07-Apr-2022

PLATE-25
MUDGUARD & STICKER

Fig. No.	Part No.	Description	Qty	Remarks
1	B076120	HEXAGONAL EMBLEM	1	
2	B073875SL	LOGO SUPPORT - PAINTED	1	
3	B074063	GASKET FOR FRONT MUDGUARD	1	
4	013880	PLAIN WASHER	4	
5	142425	BUTTON	4	
6	B042612	REAR MUDGUARD RH/LH	2	
7	B042612	REAR MUDGUARD RH/LH	2	
8	142424	MUDFLAP FOR RR MUDGUARD	2	
9	16603	PLAIN WASHER (METALLIC)	8	
10	604603	RIVET	8	
11	116103	MUD FLAP FRONT	1	
12	B073882BL	FRONT MUDGUARD - PAINTED - BL	1	
12	B073882BW	FRONT MUDGUARD - PAINTED-BW	1	
12	B073882CB	FRONT MUDGUARD - PAINTED -CB	1	
12	B073882EG	FRONT MUDGUARD - PAINTED - EG	1	
12	B073882GY	FRONT MUDGUARD - PAINTED - GY	1	
12	B073882LB	FRONT MUDGUARD_UPGRD_PAINTED_LB	1	
12	B073882NB	FRONT MUDGUARD - PAINTED - NB	1	
12	B073882SL	FRONT MUDGUARD	1	
12	B073882WR	FRONT MUDGUARD - PAINTED-WR	1	
12	B073882PA	RONT MUDGUARD_UPGRD_PAINTED_VERDE GREEN-PA	1	
12	B073882PB	FRONT MUDGUARD_UPGRD_PAINTED_BROWN-PB	1	
13	78307	BENT SPRING WASHER M6	4	
14	31089	HEX HEAD SCREW M6X18 CL 8.8	4	
15	6B000377	STICKER APE CITY XTRA (FRONT PANEL)	1	
16	6B000378	STICKER CITY XTRA (SIDE PANEL)	2	
17	31088	HEX HD SCREW M6 X 16 CL 8.8 (811061623)	8	
18	016406	SPRING WASHER	8	
19	20106	HEX NUT M6	8	

60

Print Date: 07-Apr-2022

PLATE-26

FUEL TANK & FUEL LINE_PETROL

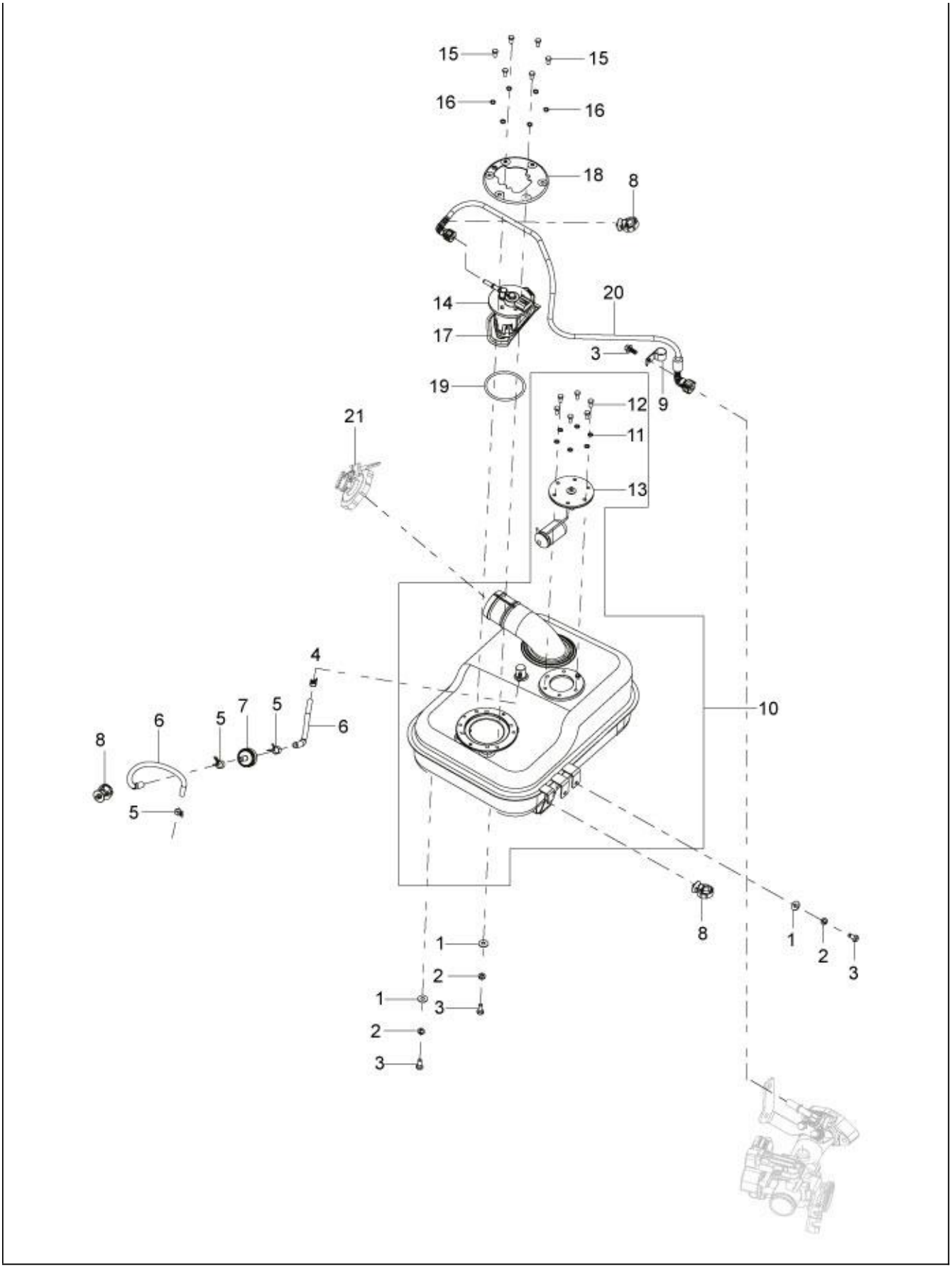
15
15
16
16
18
8
14
20
17
3
19
9
12
21
11
13
4
10
7
5
5
6
6
8
5
8
1
1
2
2
3
1
3
2
3

61

Print Date: 07-Apr-2022

PLATE-26

FUEL TANK & FUEL LINE_PETROL

Fig. No.	Part No.	Description	Qty	Remarks
1	13880	METALIC PLAIN WASHER	3	
2	16406	SPRING WASHER M6 OD12	3	
3	D9166140616	BOLT, W/WASHER	3	
4	B003282	HOSE CLIP (DIA.7) (PETROL & CNG/LPG)	1	
5	B075707	SPRING BAND HOSE CLAMP (DIA 10	2	
6	B075337	FUEL PIPE-TANK TO SMALL FILTER-CITY PTL	2	
7	AP8104614	VALVE	1	
8	B076007	PIPE CLIP 1 WAY	4	
9	6A000477	P-CLAMP, FUEL PIPE	1	
10	6A001894	ASSY. FUEL TANK WITH TABK UNIT (CITY XTR	1	
11	16405	SPRING WASHER M5	6	
12	31056	HEX HEAD SCREW M5 X 12 CL. 8.8	6	
13	6D001084	TANK UNIT	1	
14	1D002701	FUEL PUMP	1	
15	16405	SPRING WASHER M5	6	
16	6C000377	HEX COMBI SCREW (M5X0.8X10)	6	
17	1D003477	FILTER	1	
18	6A000816	LOCKING PLATE FOR PUMP MOUNTING	1	
19	1B002953	FUEL PUMP GASKET	1	
20	6A001906	ASSY. FUEL FEED PIPE (TANK TO ENGINE)	1	
21	1E002675	CAP ASSY, FUEL TANK	1	

62

Print Date: 07-Apr-2022

PLATE-27

DASHBOARD ASSLY COMPLETE & LOCK SET

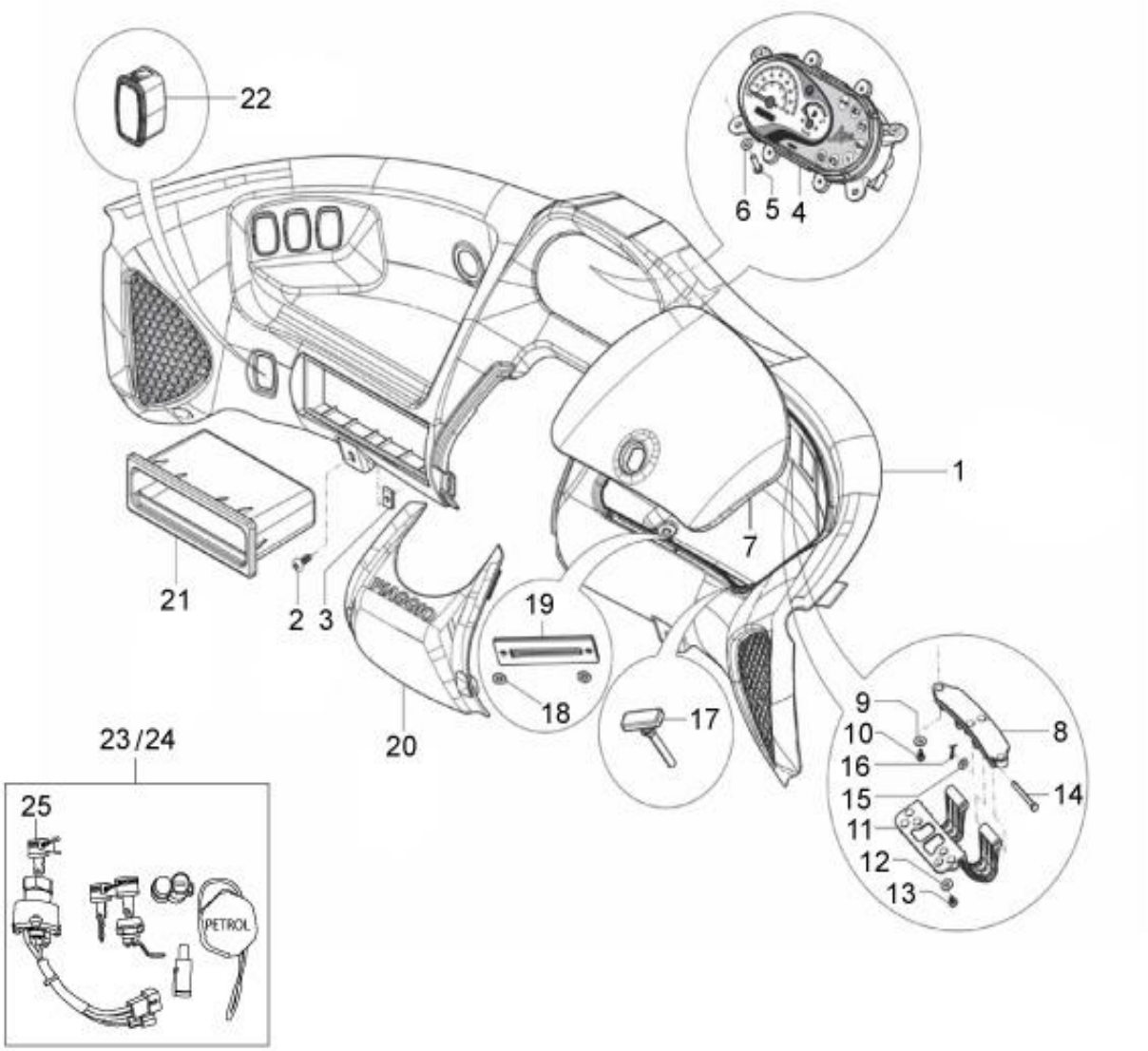
22
6 5 4
1
7
21
2 3
19
18
20
17
9
10
16
15
11
12
13
8
14
23/24
25
PETROL

63

Print Date: 07-Apr-2022

PLATE-27

DASHBOARD ASSLY COMPLETE & LOCK SET

Fig. No.	Part No.	Description	Qty	Remarks
1	6B003178	BARE DASHBOARD W/O INST. CLUSTER AND SWITCHES	1	
2	660168	PAN SELF TP. SCREW 10 SGX13AB	7	
3	8080	SPRING PLATE	7	
4	6D000322	INST CLUSTER, APE CITY PETROL (BSVI)	1	
5	661925	PHILIP PAN HEAD SCREW (M5 X 0.8 X 1.6)	4	
6	6078	PLAIN WASHER 12 X 5.2 X 1	4	
7	B073810	GLOVE BOX COVER	1	
8	B073813	HINGE MTG. BKT.	1	
9	16670	PLAIN WASHER 12X4.5X1	4	
10	B074261	PHIL RD HD SCREW M4	4	Under Development
11	B073814	HINGE	1	
12	16670	PLAIN WASHER 12X4.5X1	6	
13	B074261	PHIL RD HD SCREW M4	6	Under Development
14	B074262	PIN	2	
15	3055	PLAIN WASHER M5	2	
16	567920	SPLIT PIN	2	
17	B074275	RUBBER DAMPER	2	
18	3054	PLAIN WASHER	2	
19	643691	BOLT LOCK PLATE	1	
20	B073811	STEERING COLUMN COVER	1	
21	B073812	UTILITY BOX	1	
22	B075732	FUEL CHANGE OVER SWITCH	1	Not applicable
23	6G000115	LOCK SET WITH KEYS (CARGO PTL 300 CC)	1	
25	B024532	KEY IGNITION SWITCH W/COUPLER (PAVNA)	1	

64

Print Date: 07-Apr-2022

PLATE-28
HANDLEBARS

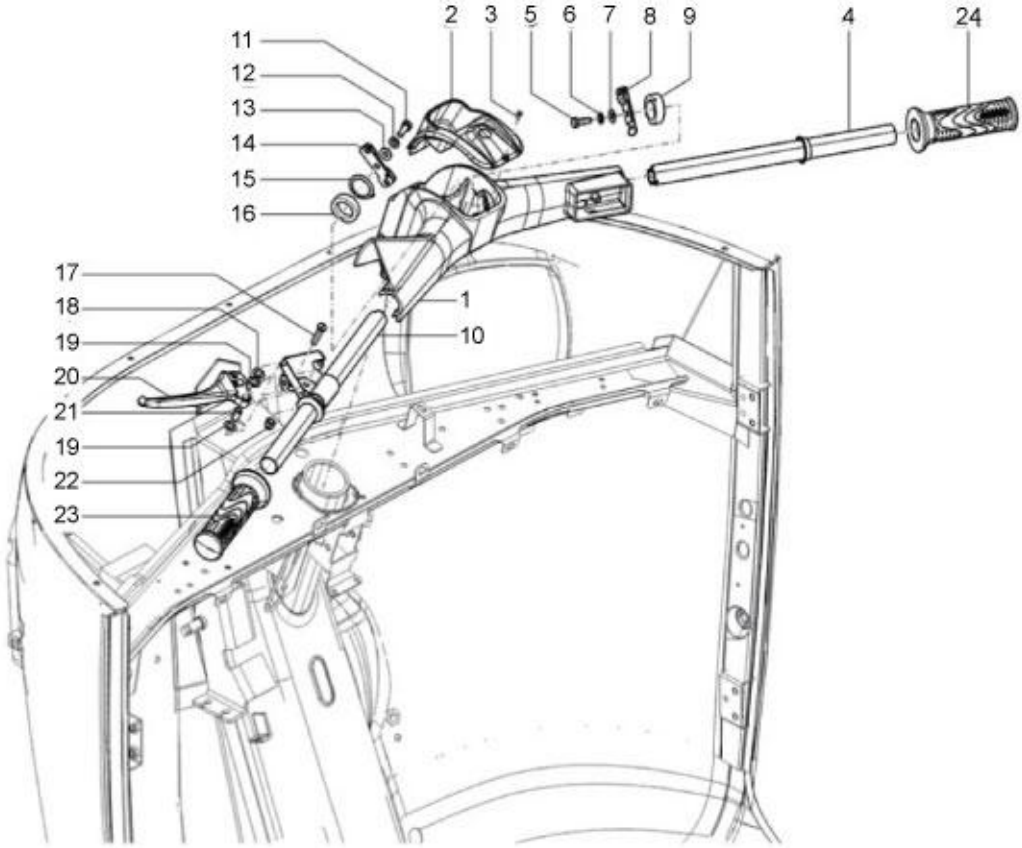
2
3
5
6
7
8
9
4
24
11
12
13
14
15
16
17
18
19
20
21
19
22
23
1
10

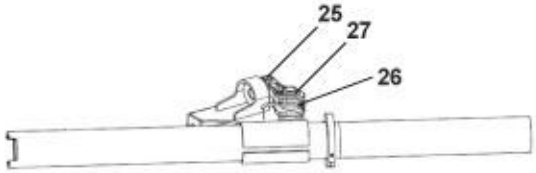
25
27
26

65

Print Date: 07-Apr-2022

PLATE-28
HANDLEBARS

Fig. No.	Part No.	Description	Qty	Remarks
1	B075687ED	HANDLE BAR BODY-ED	1	
2	B073817	COVER	1	
3	632158	CSK HEAD SCREW	1	
4	587902	ACCELERATOR TUBE ASSY.	1	
5	31089	HEX HEAD SCREW M6X18 CL 8.8	1	
6	016406	SPRING WASHER	1	
7	16626	PLAIN WASHER (18X10.5X2)	1	
8	B079248	ACCELERATOR TUBE SUPPORT BKT RH	1	
9	587904	SINTERED WASHER HANDLE BAR (41769)	1	
10	109775	GEAR CONTROL LEVER S/A	1	
11	31089	HEX HEAD SCREW M6X18 CL 8.8	1	
12	016406	SPRING WASHER	1	
13	16626	PLAIN WASHER (18X10.5X2)	1	
14	109775	GEAR CONTROL LEVER S/A	1	
15	60565	SPRING WASHER	1	
16	109404	WASHER OF RABBET(41737)	1	
17	632158	CSK HEAD SCREW	1	
18	16319	BENT SPRING WASHER	1	
19	16620	PLAIN WASHER	2	
20	6A001637	LEVER, CLUTCH CONTROL	1	
21	125181	SPACER	1	
22	12138	NYLOCK NUT M6	1	
23	B073848	HANDLE BAR GRIP - LH	1	
24	B073849	HANDLE BAR GRIP - RH	1	
25	1E002771	LEVER, CLUTCH SWITCH	1	
26	1E002772	SPRING TORSION	1	
27	6A000209	CIRCLIP FOR SHAFT ID 9.3	1	Under Development

66

Print Date: 07-Apr-2022

PLATE-29
WINDSCREEN WIPER

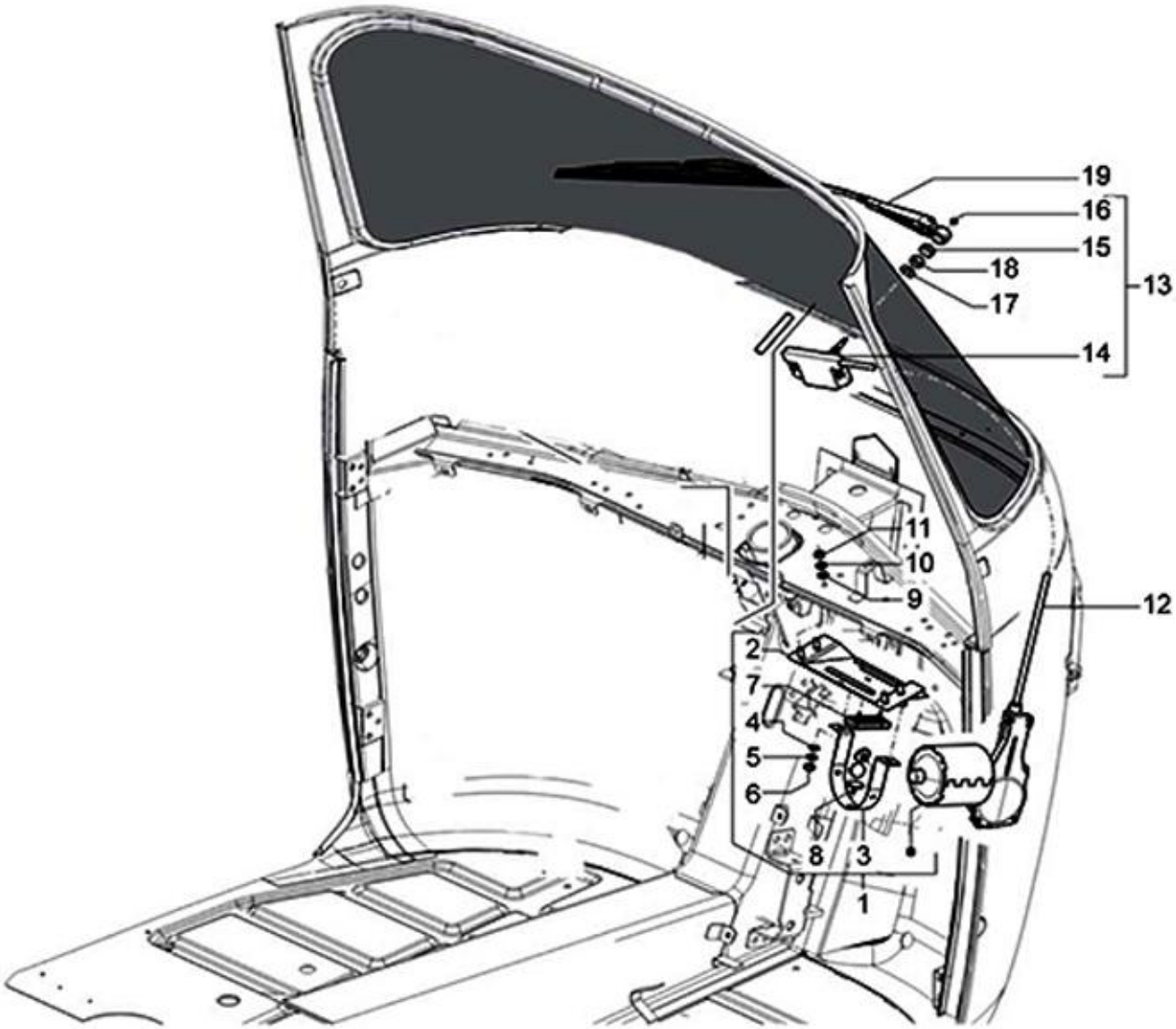
19
16
15
18
17
13
14
11
10
9
12
2
7
4
5
6
8
3
1

67

Print Date: 07-Apr-2022

PLATE-29
WINDSCREEN WIPER

Fig. No.	Part No.	Description	Qty	Remarks
1	632995	WIPER MOTOR ASSY. WITH MTG. BKT.	1	
2	569166	WIPER MOTOR MOUNTING BRACKET	1	
3	569177	STRAP ASSY FOR WIPER MOTOR (N.I.)	1	
4	16406	SPRING WASHER M6 OD12	2	
5	3056	PLAIN WASHER M6 OD12	2	
6	20106	HEX NUT M6	2	
7	569178	RUBBER PAD FOR WIPER MOTO (N.I.)	1	
8	925571	CABLE RACK (033200/PGO)	1	NI
9	3056	PLAIN WASHER M6 OD12	4	
10	16406	SPRING WASHER M6 OD12	4	
11	20106	HEX NUT M6	4	
12	B076303	BUNDY TUBE (MOTOR TO WHEEL BOX)	1	
12A	604506	BUNDY TUBE OUTER	1	
13	B076304	WHEEL BOX ASSY. (MOD.)	1	
14	NS	NOT SERVICEABLE	1	
15	NS	NOT SERVICEABLE	1	
16	569165	DOME NUT	1	
17	6173	METALLIC PLAIN WASHER (808001026)	1	
18	20106	HEX NUT M6	1	
19	632292	WIPER ARM & BLADE ASSY	1	

68

Print Date: 07-Apr-2022

PLATE-30

SELECTORS - SWITCHES - BUTTONS

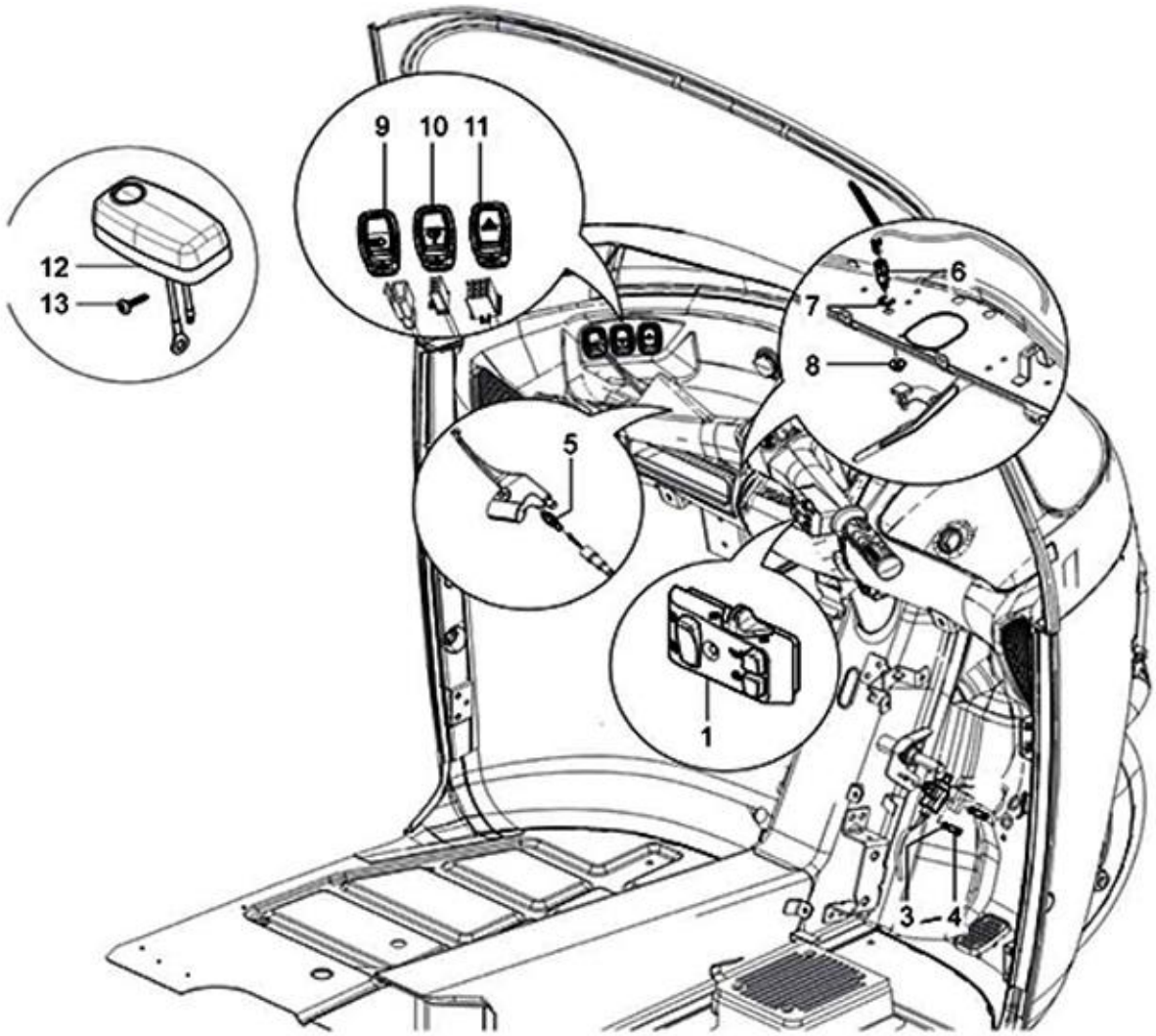
9
10
11
12
13
6
7
8
5
1
3
4

69

Print Date: 07-Apr-2022

PLATE-30

SELECTORS - SWITCHES - BUTTONS

Fig. No.	Part No.	Description	Qty	Remarks
1	B073850R	HBS (ST. BUTTON) - CITY UPGRADE (NEW) _ALL NUOVO MODEL	1	
2	567498R	BRAKE/REVERSE LIGHT SW (INTEGRAL CAP)-PAV	1	
3	3054	PLAIN WASHER	2	
4	B074568	SCREW TERMINAL	2	
5	642032	PUSH BUTTON-CLUTCH	1	
6	640762	PUSH BUTTON REVERSE	1	
7	5969	CIRCLIP DIA 9 E TYPE	1	
8	B076448	BUSH REVERSE SWITCH MTG.	1	
9	B073478R	SWITCH 3 POSITION	1	
10	B073479R	WIPER MOTOR SWITCH/ SWITCH WIPER MOTOR	1	
11	B073481R	HAZARD WARNING SWITCH WITH CROWN CAP (12V)(VE)	1	
12	150041R	CABIN LIGHT ASSY. (W/O BULB)	1	
13	15727	PAN SELF TAPPING SCREW	2	

70

Print Date: 07-Apr-2022

PLATE-31

ELECTRICAL DEVICES / HEAD LAMP & TAIL LAMP ASSLY.

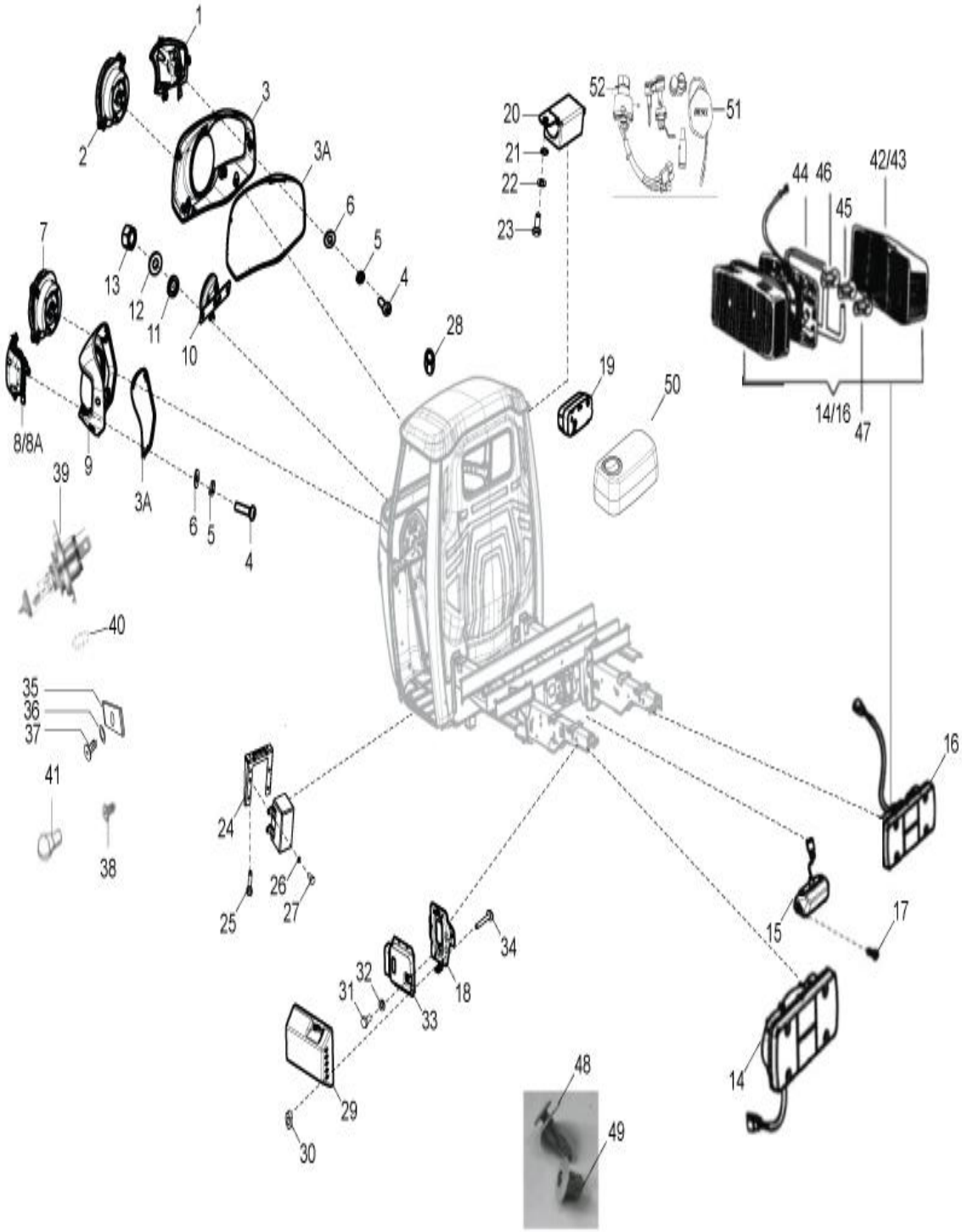
1
2
3
3A
6
5
4
7
13
12
11
10
28
8/8A
9
3A
6
5
4
39
40
35
36
37
41
38
24
25
26
27
20
21
22
23
52
51
19
50
44
46
45
42/43
14/16
47
16
15
17
14
34
18
33
31
32
29
30
48
49

71

Print Date: 07-Apr-2022

PLATE-31

ELECTRICAL DEVICES / HEAD LAMP & TAIL LAMP ASSLY.

Fig. No.	Part No.	Description	Qty	Remarks
1	6D000146R	FRONT DIRECTION INDICATORS RH	1	
1.A	B078272	BLINKER HOUSING (RH)-(HOUSING + GLASS)	1	
2	6D000144R	HEAD LAMP ASSLY - RH (NUOVO)	1	
3	B074434	BEZEL_HEADLAMP BLINKER (RH)	1	
3A	B073969	HL BEZEL BEADING	2	
4	661925	PHILIP PAN HEAD SCREW (M5 X 0.8 X 1.6)	6	
5	16405	SPRING WASHER M5	6	
6	6078	PLAIN WASHER 12 X 5.2 X 1	6	
7	6D000143R	HEAD LAMP ASSLY LH - NUOVO	1	
8	6D000145R	FRONT DIRECTION INDICATORS LH	1	
8A	B078274	BLINKER HOUSING (LH)-(HOUSING + GLASS)	1	
9	B074433	BEZEL_HEADLAMP BLINKER (LH)	1	
10	B074033	HORN ASSLY(DIA 70)	1	
11	3056	PLAIN WASHER M6 OD12	2	
12	16406	SPRING WASHER M6 OD12	2	
13	20106	HEX NUT M6	2	
14	643704R	TAIL LAMP ASSY. LH	1	
15	150915R	REGISTRATION PLATE LAMP ASSY	1	
16	643705R	TAIL LAMP ASSY. RH	1	
17	15727	PAN SELF TAPPING SCREW	2	
18	6D000417	BRACKET, ECU MOUTING ASSLY	1	
19	150041R	CABIN LIGHT ASSY. (W/O BULB)	1	
20	6D000305	FLASHER RELAY (BG LI-IN)	1	
21	12546	PLAIN WASHER / MULTI TOOTH LOCK WASHER M5	2	
22	3055	PLAIN WASHER M5	1	
23	31057	HEX HEAD SCREW M5 X 14 CL 8.8	2	
24	6D000265	BKT, FUSE BOX MOUNTING FRONT ASSEMBLY	1	
25	B075965	FLANGED HEX HEAD SCREW M5 X 14	2	
26	3058	PLAIN WASHER 15X8.4X1.5	8	
27	31116	HEX HD. SCREW M8X16	8	
28	20105	PLAIN NUT M5	2	
29	6D000550	COVER, ECU PROTECTION	1	
30	261323	NUT	2	
31	B075965	FLANGED HEX HEAD SCREW M5 X 14	3	
32	3055	PLAIN WASHER M5	3	

72

Print Date: 07-Apr-2022

PLATE-31

ELECTRICAL DEVICES / HEAD LAMP & TAIL LAMP ASSLY.

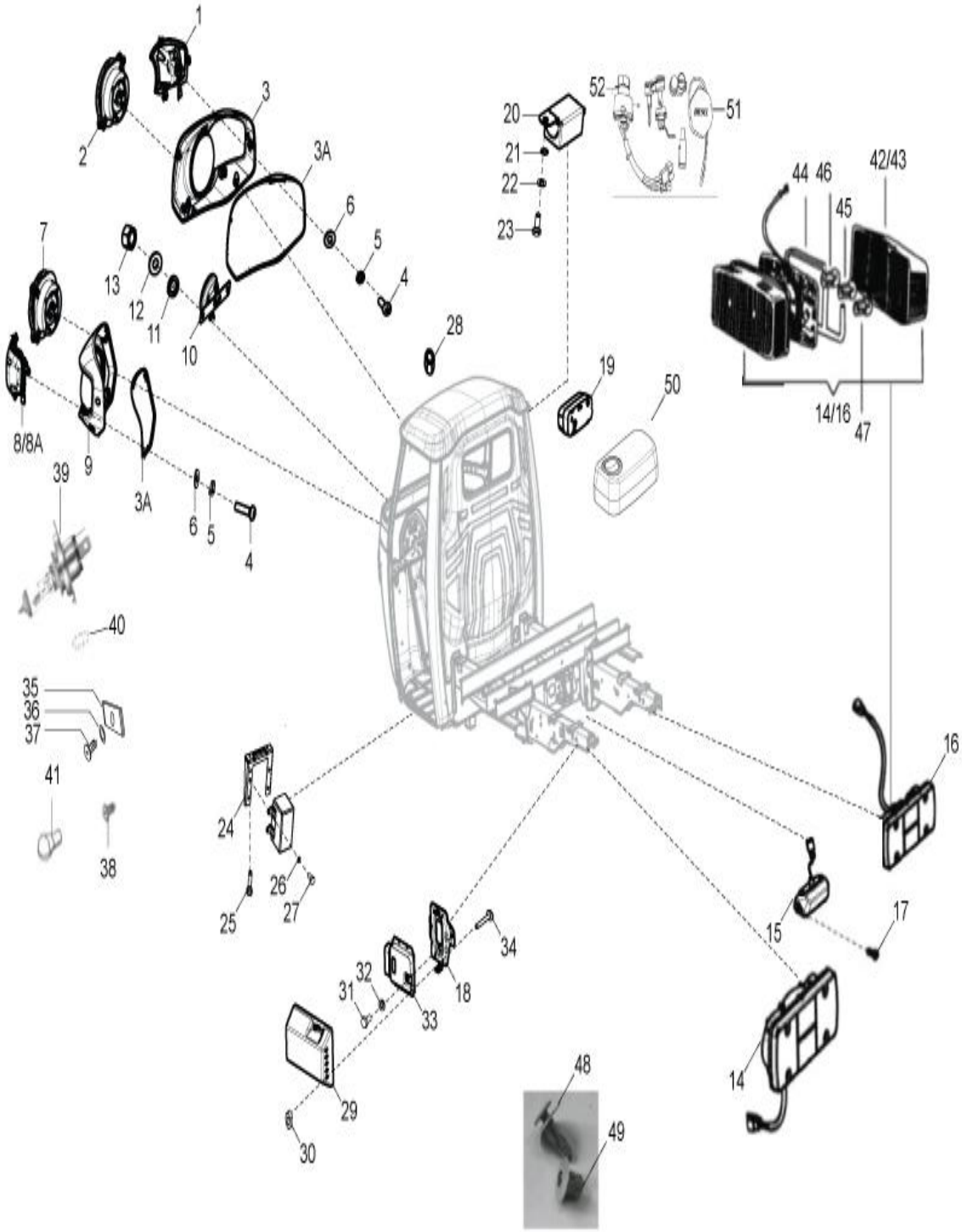
1
2
3
3A
6
5
4
7
13
12
11
10
28
8/8A
9
3A
6
5
4
39
40
35
36
37
41
38
24
25
26
27
20
21
22
23
52
51
19
50
44
46
45
42/43
14/16
47
16
15
17
14
34
18
33
31
32
29
30
48
49

73

Print Date: 07-Apr-2022

PLATE-31

ELECTRICAL DEVICES / HEAD LAMP & TAIL LAMP ASSLY.

Fig. No.	Part No.	Description	Qty	Remarks
33	CM301417	ELECTRONIC DEVICE	1	
34	B075965	FLANGED HEX HEAD SCREW M5 X 14	4	
35	8080	SPRING PLATE	4	
36	3055	PLAIN WASHER M5	4	
37	660168	PAN SELF TP. SCREW 10 SGX13AB	4	
38	B074539	PHILIPS COUNTER HEAD SCREW	6	
39	B078286R	HS1_BULB (12 V _35/35W	2	
40	567593	BULB 12V 5W / LAMP 4W	2	
41	925581	INDICATOR LIGHT BULB 12V 21W AMBER COLOUR	2	
42	920083	TAIL LAMP LENSE LH WITH HARDWARE & GASKET	2	
43	920084	TAIL LAMP LENSE RH WITH HARDWARE & GASKET	2	
44	925603	PACKING	2	
45	181746	INDICATOR BULB 12V 10W	2	
45	925581	INDICATOR LIGHT BULB 12V 21W AMBER COLOUR	2	
46	567700	BULB 10/5W (STOP LIGHT)	2	
47	181747	REVERSE LAMP BULB 12V 5W	2	
48	B076606	GROMMET	4	
49	B076605	PIN	4	
50	150041R	CABIN LIGHT ASSY. (W/O BULB)	1	
51	6G000115	LOCK SET WITH KEYS (CARGO PTL 300 CC)	1	
52	B024532	KEY IGNITION SWITCH W/COUPLER (PAVNA)	1	
53	6D000481	15A MINIVAL FUSE BLUE	1	NI

74

Print Date: 07-Apr-2022

PLATE-32

FORK/STEERING TUBE - STEERING BEARING UNIT

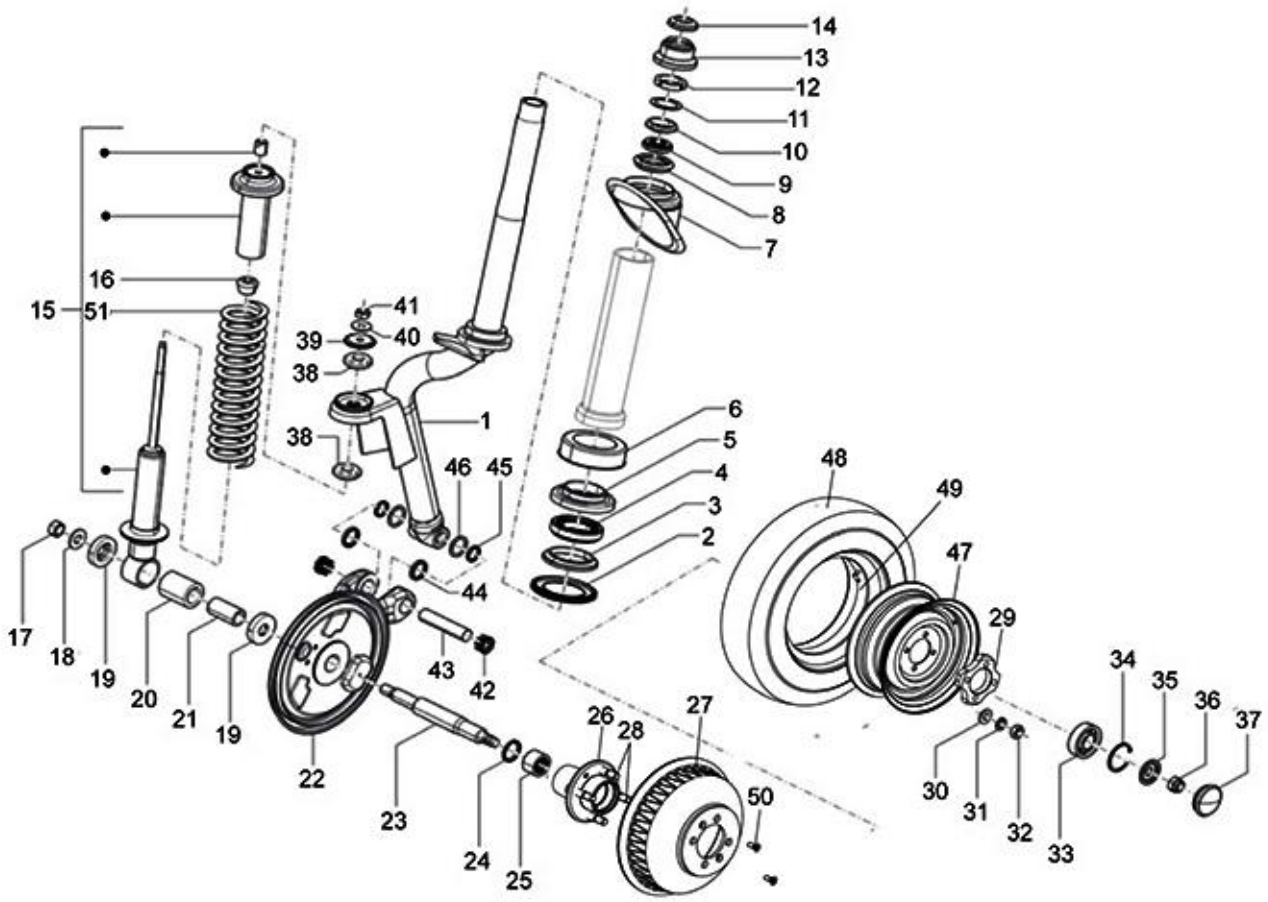
14
13
12
11
10
9
8
7
16
15
51
41
39
40
38
1
38
6
5
4
3
2
46
45
48
49
47
29
44
17
18
19
20
21
19
43
42
22
23
24
25
26
28
27
50
30
31
32
33
34
35
36
37

75

Print Date: 07-Apr-2022

PLATE-32

FORK/STEERING TUBE - STEERING BEARING UNIT

Fig. No.	Part No.	Description	Qty	Remarks
1	6C000471SP	FRONT SUSPENSION, ASSY_SPD	1	ASSY.INC. SUS., BACK PLATE ASSY &BRK DRUM&SUS.
1	6C000465SP	STEERING COLUMN WITH SUSP ARM	1	ASSY.INC. SUS., BACK PLATE ASSY
1	B075694	STEERING COLUMN WITH IP	1	
2	109066	WASHER WITH PROTECTION FOR BEARING	1	
3	567993	BEARING RACE LOWER BOTTOM	1	
4	6C000191	LOWER BALL CAGE (VE)	1	
5	567992	BEARING RACE LOWER TOP	1	
6	109064	DUST COVER	1	
7	109265	SPLASH GUARD DUST COVER	1	
8	567990	BEARING RACE UPPER BOTTOM	1	
9	6C000190	UPPER BALL CAGE (VE)	1	
10	567991	BEARING RACE UPPER TOP	1	
11	108873	STOP WASHER FOR HOLDING	1	
12	108874	SECURING RING NUT	1	
13	604758	PROTECTION	1	
14	604759	RUBBER CAP STEERING COLUMN (N.I.)	1	
15	B073690	FRONT SHOCK ABSORBER	1	
16	75708	SILENT BLOCK	1	
17	568095	NYLOCK NUT	1	
18	87067	PLAIN WASHER 30.5X14.3X2	1	
19	87067	PLAIN WASHER 30.5X14.3X2	2	
20	566545	RUBBER BUSH (FRT SHOCK ABSORBER) - MODIFIED	1	
21	109117	RUBBER BUSH (FRT SHOCK ABSORBER) / RING	1	
22	6C000272	FRONT BRAKE ASSEMBLY	1	
23	643772R	FRONT WHEEL AXLE	1	
24	196302	OIL SEAL	1	
25	125289	NEEDLE BEARING, CRANKASE, FRONT WHEEL	1	
26	B077465	FRONT HUB S/A	1	
27	B077245	BRAKE DRUM (CAST IRON)	1	
28	B001301	BOLT FRONT HUB.	4	
29	B077461	SPACER DISC FRONT WHEEL MTG (ALUMIN.)	1	
30	B008915	PLAIN WASHER 16.6X10.2X1	4	
31	16410	SPRING WASHER	4	
32	20110	HEX NUT M10	4	
33	30209R	BALL BEARING FRONT WHEEL HUB	1	

76

Print Date: 07-Apr-2022

PLATE-32

FORK/STEERING TUBE - STEERING BEARING UNIT

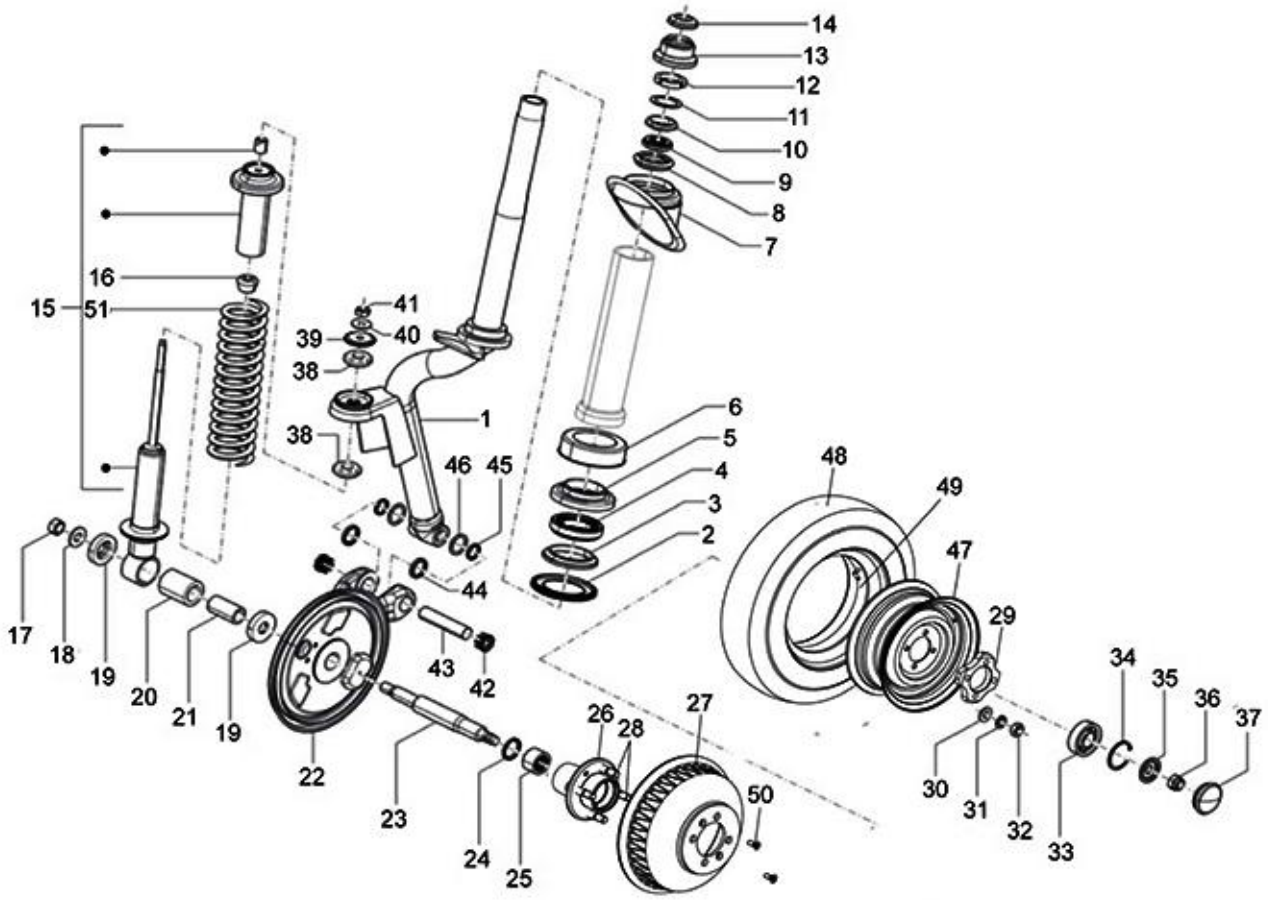
14
13
12
11
10
9
8
7
16
15
51
41
39
40
38
1
38
6
5
4
3
2
46
45
48
49
47
29
44
17
18
19
20
21
19
43
42
22
23
24
25
26
28
27
50
30
31
32
33
34
35
36
37

77

Print Date: 07-Apr-2022

PLATE-32

FORK/STEERING TUBE - STEERING BEARING UNIT

Fig. No.	Part No.	Description	Qty	Remarks
34	567473	CIRCLIP DIA. 42 INT. (841004203)	1	
35	180431	COIN WASHER	1	
36	74521	NUT M14 X 1.5	1	
37	107871	CAP	1	
38	74414	RUBBER BUSH/BUFFER FOR COUPLING SHOCK ABSORBE	2	
39	6066	PL WASHER 10.5X38X9	1	
40	16410	SPRING WASHER	1	
41	20110	HEX NUT M10	1	
42	107718	ROLLER BUSH	2	
43	137235	STEERING PIN	1	
44	150579	RING FOR HOLDING TYPE J F101 17A	2	
45	8771	OIL SEAL (18-24-4)	2	
46	6733	O RING	2	
47	6C000430	WHEEL RIM ASSY	1	
48	B001315	TYRE (4.0 X 8,4 PR)	3	
49	B001316	INNER TUBE FOR TYRE 4.0 X 8 INCH	3	
50	812061656	CSK PHILIPS HEAD SCREW M6 X 16	2	
51	940066	SPRING SHOCK ABSORBER-UG / RING	1	
52	KIT96033R	MODIFIED BALL KIT FOR 3WH (WHITE)	1	NI
53	KIT95021R	STEERING CONE SET (UPPER)	1	NI
54	KIT95022R	STEERING CONE SET (LOWER)	1	NI
55	KIT96016R	KIT OF STEERING CONE & BALL KIT	1	NI
56	KIT940003R	STEERING PIN KIT WITH O RING	1	NI

78

Print Date: 07-Apr-2022

PLATE-33

REAR SUSPENSION - SHOCK ABSORBER/S & ENGINE SUPPORT

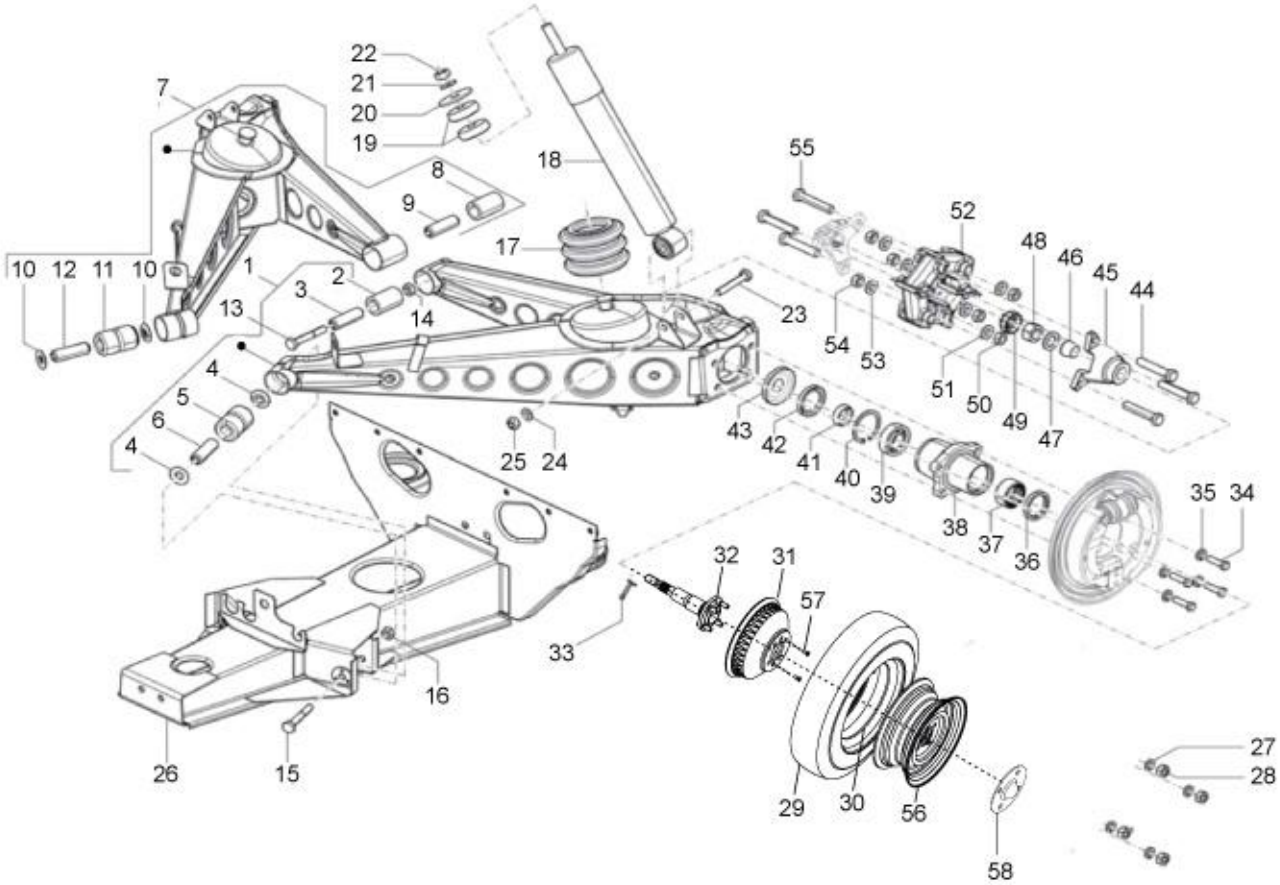
22
21
20
19
7
18
55
8
9
52
17
48
46
45
44
10
12
11
10
1
2
3
13
14
23
54
53
51
50
49
47
4
5
6
4
25
24
43
42
41
40
39
38
37
36
35
34
32
31
57
33
16
26
15
27
28
29
30
56
58

79

Print Date: 07-Apr-2022

PLATE-33

REAR SUSPENSION - SHOCK ABSORBER/S & ENGINE SUPPORT

Fig. No.	Part No.	Description	Qty	Remarks
1	B075807	ARM SUB ASSY. LH - REAR SUSPENSION	1	
2	226662	RING FOR ELASTIC SUPPORT	1	
3	226661	INTERNAL BUSH	1	
4	661266	SHOULDER WASHER	2	
5	226596	BUSH FRONT RING FOR ELASTIC SUPPORT	1	
6	267065	SPACER FRONT	1	
7	B075808	ARM SUB ASSY. RH - REAR SUSPENSION	1	
8	226662	RING FOR ELASTIC SUPPORT	1	
9	226661	INTERNAL BUSH	1	
10	661266	SHOULDER WASHER	2	
11	226596	BUSH FRONT RING FOR ELASTIC SUPPORT	1	
12	267065	SPACER FRONT	1	
13	643741	HEX HDD BOLT M10 X 80 CL 12.9	2	
14	231370	SELF BREAKING NUT M10	2	
15	643741	HEX HDD BOLT M10 X 80 CL 12.9	2	
16	231370	SELF BREAKING NUT M10	2	
17	B076290	RUBBER BUMPER	2	
18	B076292	SHOCK ABSORBER REAR - BSIV	2	
19	157103	BUSH - SHOCK ABSORBER	2	
20	6066	PL WASHER 10.5X38X9	2	
21	16410	SPRING WASHER	2	
22	20110	HEX NUT M10	2	
23	267068	HEX HEAD BOLT M10 X 60 CC 10.9	2	
24	286328	PLAIN WASHER 20X10.2X2	2	
25	231370	SELF BREAKING NUT M10	2	
26	B075798	FRAME ASSY. SUSPENSION & ENGINE SUPPORT	1	
27	16410	SPRING WASHER	4	
28	20110	HEX NUT M10	4	
29	B001315	TYRE (4.0 X 8,4 PR)	3	
30	B001316	INNER TUBE FOR TYRE 4.0 X 8 INCH	3	
31	B077245	BRAKE DRUM (CAST IRON)	2	
32	B077458	REAR AXLE COMPLETE	2	
33	12790	SPLIT PIN	2	
34	6C000231	M8X1.25X35 HEX COMBI SCREW-12.9	8	
35	016408	SPRING WASHER	8	

80

Print Date: 07-Apr-2022

PLATE-33

REAR SUSPENSION - SHOCK ABSORBER/S & ENGINE SUPPORT

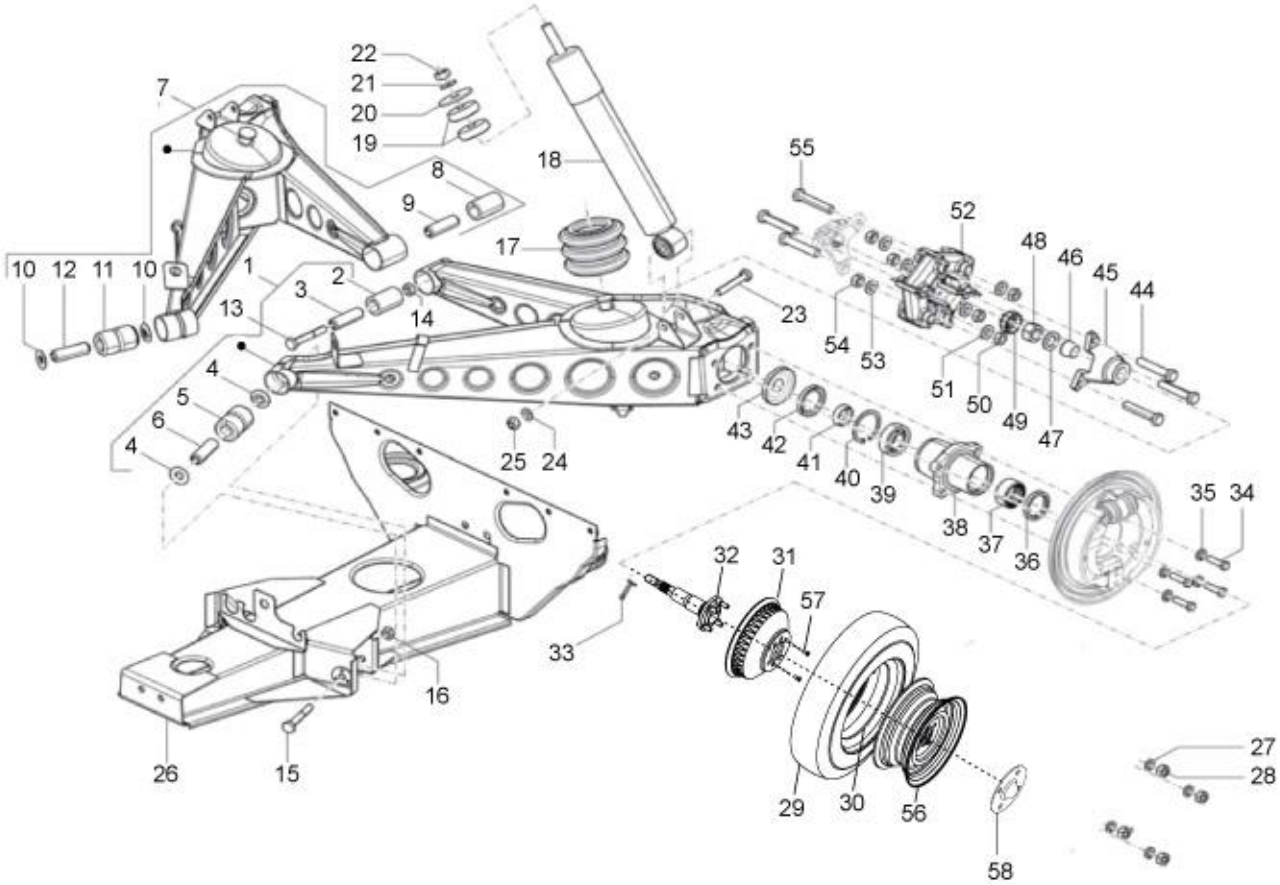
22
21
20
19
7
18
55
8
9
52
17
48
46
45
44
10
12
11
10
1
2
3
13
14
23
54
53
51
50
49
47
4
5
6
4
25
24
43
42
41
40
39
38
37
36
35
34
32
31
57
33
16
26
15
27
28
29
30
56
58

81

Print Date: 07-Apr-2022

PLATE-33

REAR SUSPENSION - SHOCK ABSORBER/S & ENGINE SUPPORT

Fig. No.	Part No.	Description	Qty	Remarks
36	20359	SEAL RING	2	
37	661282	NEEDLE ROLLER BEARING	2	
38	6C000530	REAR WHEEL HUB	2	
39	243303R	DEEP GROVE BALL BRG-RR WH AXLE	2	
40	6650	CIRCLIP DIA 50 (INT)	2	
41	661267	RING	2	
42	196302	OIL SEAL	2	
43	109892	PROTECTION CUP RR HUB	2	
44	15594	HEX HDD BOLT M10 X 35	6	
44.1	B024373	ALLEN BOLT M10X65 CL 10.9	6	
45	587617	ELASTIC JOINT CONNECTION HUB (WHL - SIDE)	2	
46	128633	CONE	2	
47	3068	PLAIN WASHER	2	
48	21118	HEX NUT M18 X 1.5P	2	
49	177559	CAP	2	
50	231370	SELF BREAKING NUT M10	3	
51	237246	SHIM WASHER 20X10.2X1	3	
52	604535	FLEXIBLE COUPLING	2	
53	237246	SHIM WASHER 20X10.2X1	3	
54	231370	SELF BREAKING NUT M10	3	
55	B024373	ALLEN BOLT M10X65 CL 10.9	3	
56	6C000430	WHEEL RIM ASSY	2	
57	812061656	CSK PHILIPS HEAD SCREW M6 X 16	2	
58	B077481	WHEEL CAP	1	

82

Print Date: 07-Apr-2022

PLATE-34
DRIVE SHAFT & BELLOW

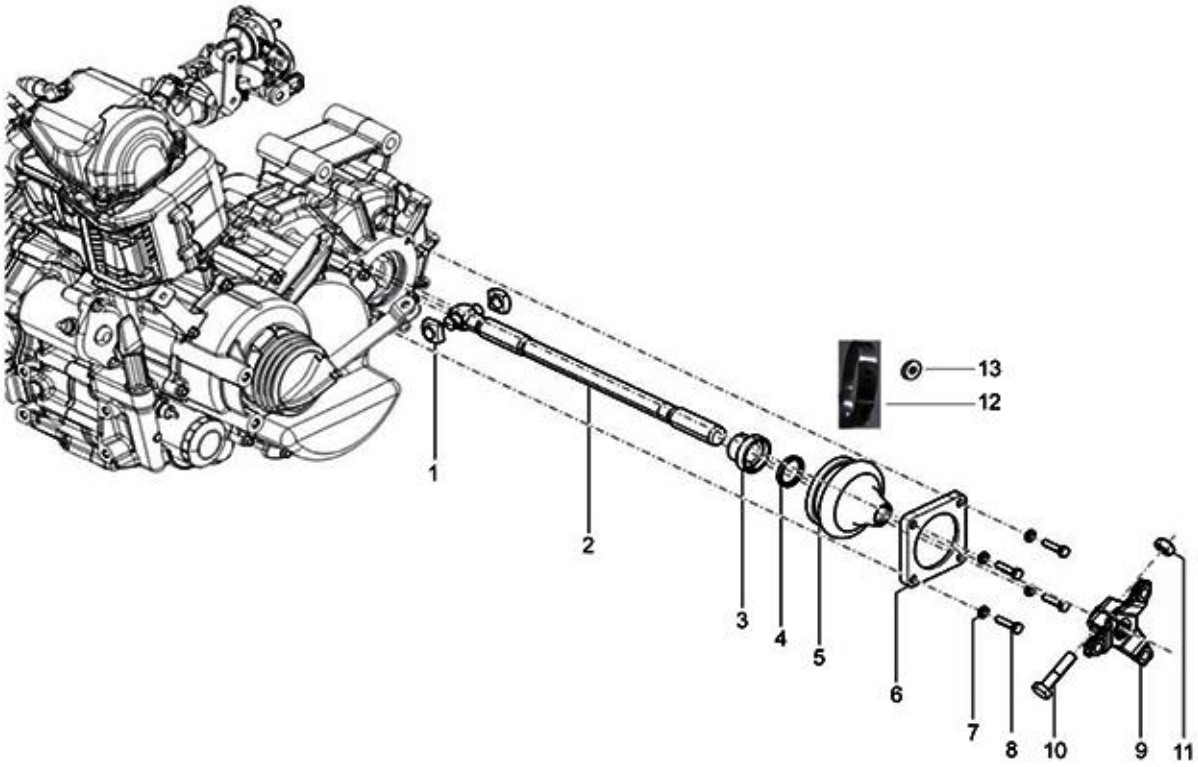
13
12
1
2
3
4
5
6
7
8
10
9
11

83

Print Date: 07-Apr-2022

PLATE-34
DRIVE SHAFT & BELLOW

Fig. No.	Part No.	Description	Qty	Remarks
1	112867R	SLIDER BLOCK PROP. SHAFT	4	
2	B023940	PROP. SHAFT S/A	2	
3	113278	BRACKET RETAINER RING (41736)	2	
4	6C000312R	SEAL RING	2	
5	6C000016	BELLOW	2	
6	111356	COVER	2	
7	016406	SPRING WASHER	8	
8	31092	HEX. HD SCREW M6X25	8	
9	111498	ELASTIC HUB	2	
10	B024614	HEX HEAD BOLT M10X45 CL 10.9	2	
11	231370	SELF BREAKING NUT M10	2	
12	6C000041	OTIKAR CLAMP FOR BELLOW	2	
13	3056	PLAIN WASHER M6 OD12	2	

84

Print Date: 07-Apr-2022

PLATE-35
CABLES

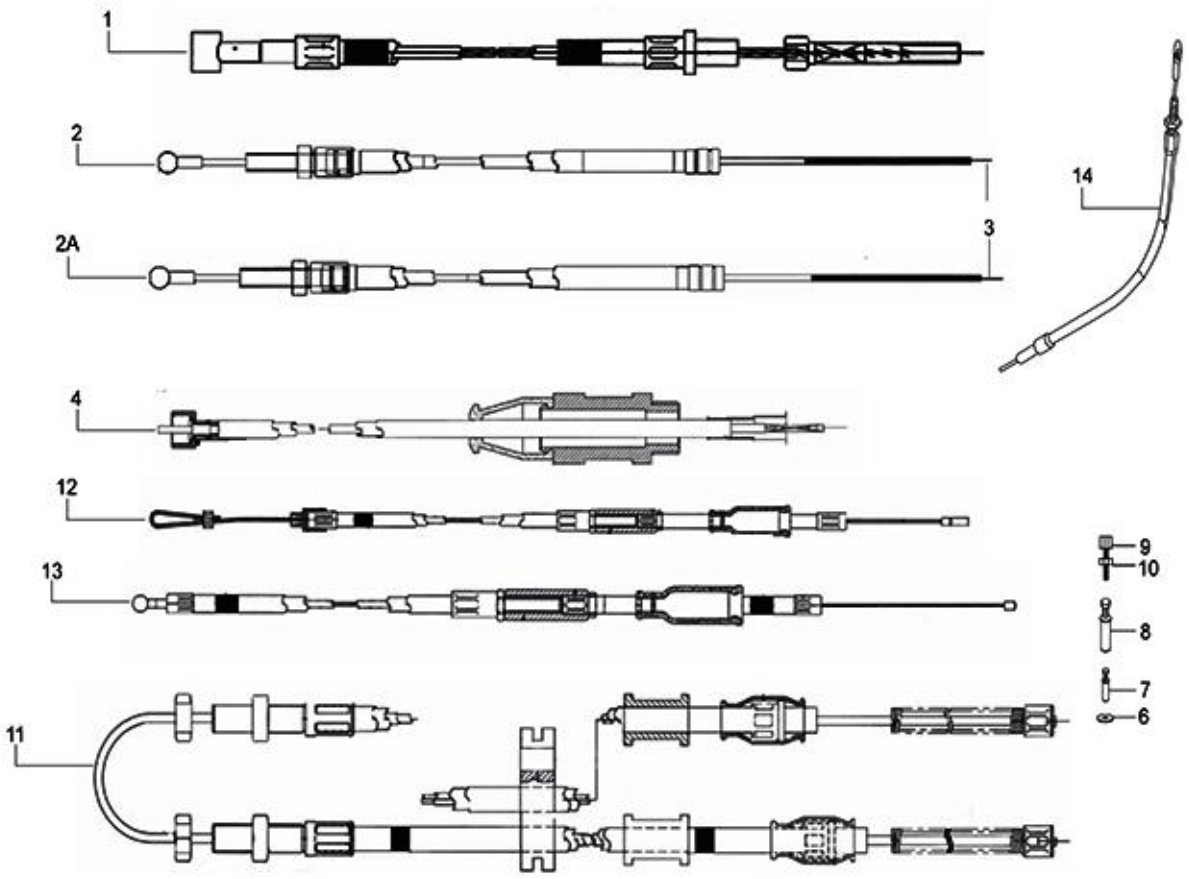
1
2
2A
3
14
4
12
13
9
10
8
7
6
11

85

Print Date: 07-Apr-2022

PLATE-35
CABLES

Fig. No.	Part No.	Description	Qty	Remarks
1	6A000804	CLUTCH CABLE	1	
2	B073469	CABLE,GEAR CONTROL ASSLY NO.2	1	
2A	B075716	CABLE,GEAR CONTROL ASSLY -WHITE	1	
3	6A000068	INNER GEAR CONTROL CABLE (BLACK/WHITE)	1	
4	B076208	SPEEDO CABLE	1	
5	6A001834	FLEXIBLE TRANSMISSION CABLE WITH WASHER	1	NI,Speedo. Inner for B0760208
6	1A008804	REVERSE CABLE REACTION BRACKET	1	
7	B076078	SCREW TERMINAL ASSLY(REVERSE CABLE)	1	
8	B076364	SCREW TERMINAL ASSY. - GEAR CONTROL	2	
9	B076305	ADJUSTER SCREW M6	2	
10	20106	HEX NUT M6	2	
11	B041774	PARKING BRAKE CABLE ASSY	1	
12	NS	NOT SERVICEABLE	1	Not applicable
13	6A001373	CABLE ASSY, ACCELERATOR	1	
14	6A001305	REVERSE GEAR CABLE	1	
15	6A000070	REVERSE GEAR INNER CABLE	1	NI inner for 6A001305
16	1A017254	COVER REVERSE GEAR CONTROL	1	NI

86

Print Date: 07-Apr-2022

PLATE-36

BRAKE - TANDEM MASTER CYLINDER, BRAKE PIPE AND HAND BRAKES

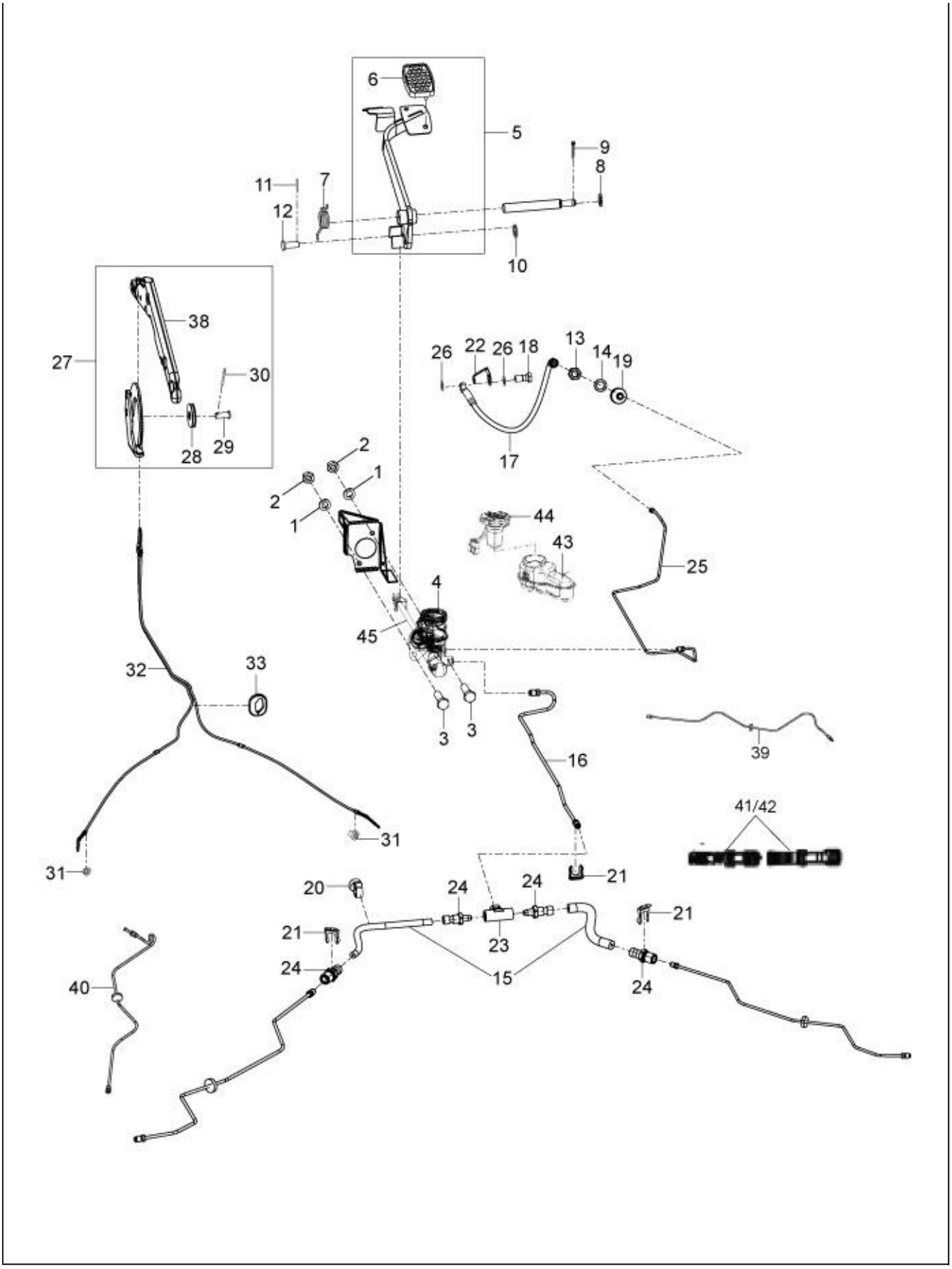
6
5
9
8
11
7
12
10
38
27
30
28
29
26
22
26
18
13
14
19
17
2
1
2
1
44
43
25
4
45
32
33
3
3
16
39
41/42
31
31
21
20
24
24
21
21
23
24
15
24
40

87

Print Date: 07-Apr-2022

PLATE-36

BRAKE - TANDEM MASTER CYLINDER, BRAKE PIPE AND HAND BRAKES

Fig. No.	Part No.	Description	Qty	Remarks
1	16408	SPRING WASHER M8	2	
2	20108	HEX NUT M8	2	
3	31122	HEX HD. SCREW M8X30 CL 8.8	1	
4	6C000443	INTEGRATED RESERVOIR & TMC	1	
5	604760	BRAKE PEDAL WITH FOOT REST ASSLY	1	
6	567461	RUBBER PROTECTION FOR PEDAL	1	
7	587928	FOOT BRAKE PEDAL SPRING	1	
8	229524	WASHER 21X14.3X2	1	
9	568737	SPLIT PIN 4 X 25 (821 0425 2 2)	1	
10	3058	PLAIN WASHER 15X8.4X1.5	1	
11	567920	SPLIT PIN	1	
12	652001	PIN	1	
13	21216	HEX NUT M16 X 1.5	1	
14	48197	PL WASHER 24X16X1.5	3	
15	B023786R	FLEXIBLE PIPE FOR REAR WHEEL BRAKE	2	
16	B042599	BRAKE TUBE FOR REAR WHEEL	1	
17	587624R	FLEXIBLE PIPING FOR FRONT WHEEL BRAKE R	1	
18	587829	BENJO BOLT	1	
19	138237	CAP	1	
20	B076007	PIPE CLIP 1 WAY	1	
21	136916	PLATE FOR RETAINING THE BRAKE FLEX. PIPE	3	
22	B003228	LOCK PLATE FRONT BRAKE HOSE	1	
23	643692	THREE WAY UNION	1	
24	644814R	FLEXIBLE BRAKE HOSE	1	
25	568161	TUBE BETWEEN TMC & FRT WHEEL	1	
26	127927R	PACKING	2	
27	587632	HAND BRAKE CONTROL ASSY.	1	Not serviceableâ??order child parts
28	567898	PULLEY FOR HAND BRAKE	1	
29	567899	CLEVIS PIN	1	
30	567920	SPLIT PIN	1	
31	B042693	CUP RETAINING SPRING (SPLIT TYPE)	2	
32	B041774	PARKING BRAKE CABLE ASSY	1	
33	B077480	GROMMET RR PART OF CENTRAL BEAM ASSLY	1	
38	B075697	HAND BRAKE CONTROL ASSLY	1	
39	B075835	BRAKE BUNDY TUBE FOR LH REAR WHEEL	1	

88

Print Date: 07-Apr-2022

PLATE-36

BRAKE - TANDEM MASTER CYLINDER, BRAKE PIPE AND HAND BRAKES

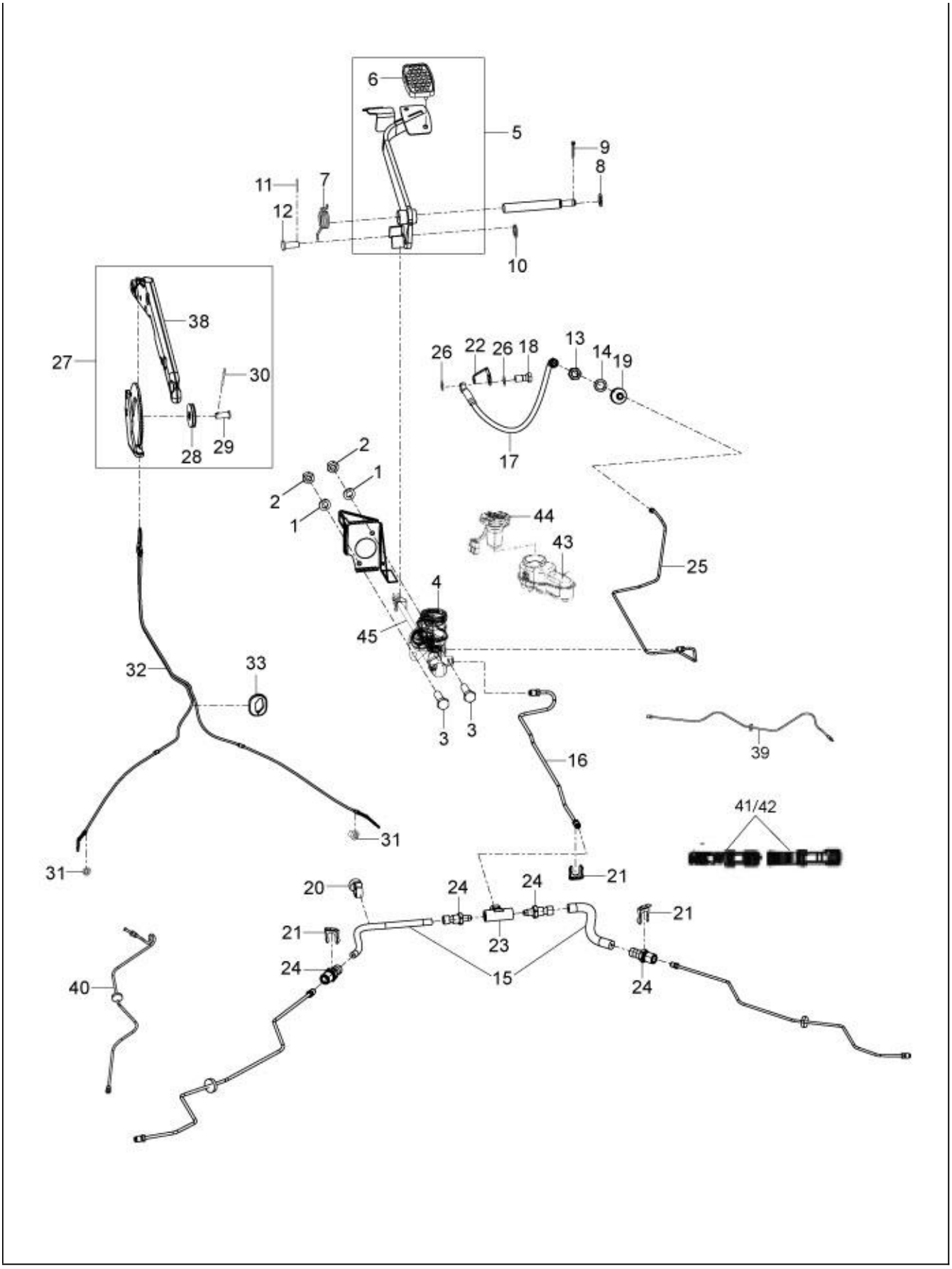
6
5
9
8
11
7
12
10
38
27
30
28
29
26
22
26
18
13
14
19
17
2
1
2
1
44
43
25
4
45
32
33
3
3
16
39
41/42
31
31
21
20
24
24
21
21
23
24
15
24
40

89

Print Date: 07-Apr-2022

PLATE-36

BRAKE - TANDEM MASTER CYLINDER, BRAKE PIPE AND HAND BRAKES

Fig. No.	Part No.	Description	Qty	Remarks
40	B075836	BRAKE BUNDY TUBE FOR RH REAR WHEEL	1	
41	B077155	MAJOR KIT TMC	1	
42	B077156	MINOR KIT TMC	1	
43	6C000468	RESERVOIR KIT TMC	1	
44	6C000469	RESERVOIR CAP	1	
45	587702	PUSH ROD	1	

90

Print Date: 07-Apr-2022

PLATE-37
CONTROL PEDALS - LEVERS

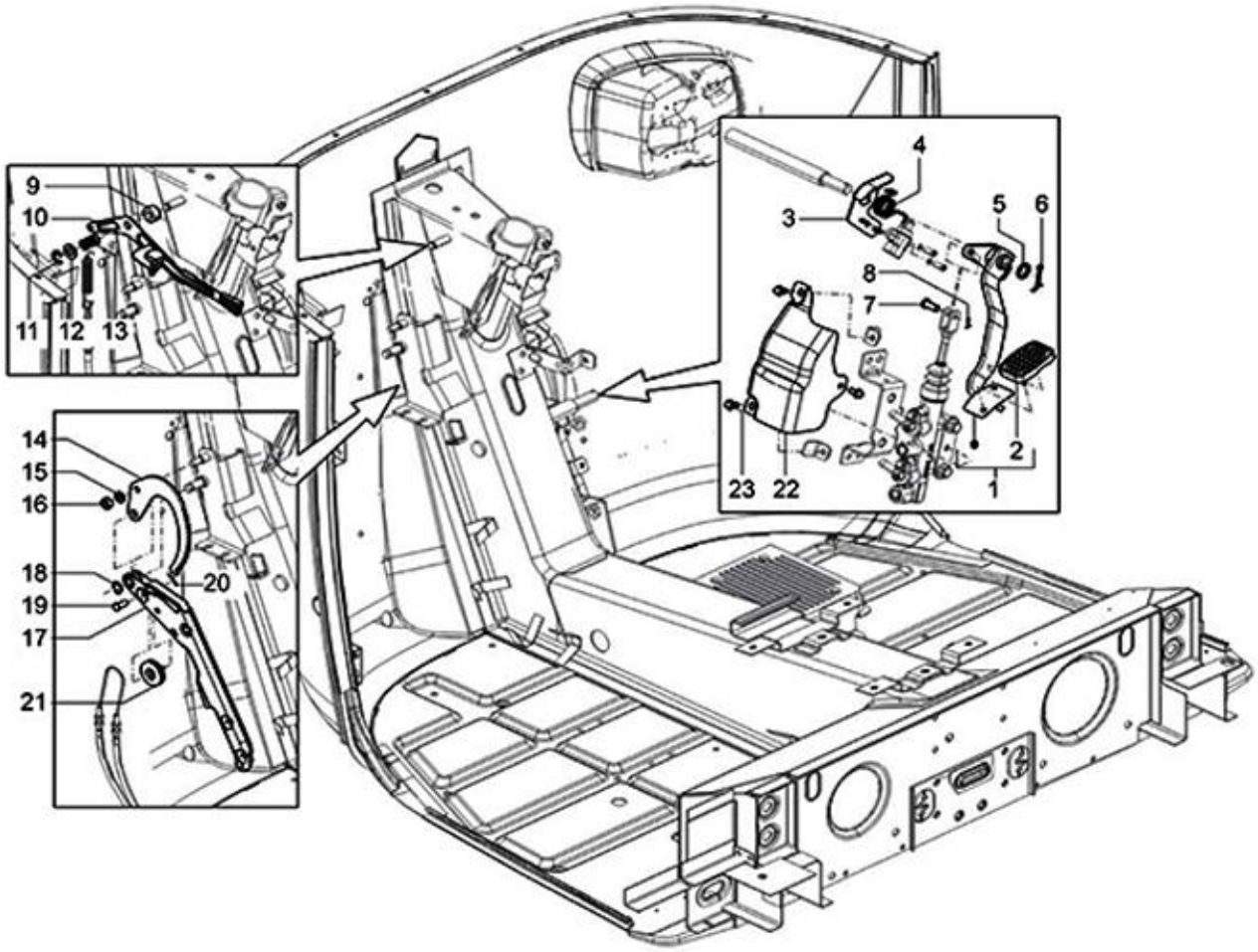
9
10
11
12
13
14
15
16
18
19
17
21
20
4
3
5
6
8
7
2
1
23
22

91

Print Date: 07-Apr-2022

PLATE-37

CONTROL PEDALS - LEVERS

Fig. No.	Part No.	Description	Qty	Remarks
1	604760	BRAKE PEDAL WITH FOOT REST ASSLY	1	
2	567461	RUBBER PROTECTION FOR PEDAL	1	
3	B075495	RACKET BRAKE SWITCH MTG. ASSLY	1	NS
4	587928	FOOT BRAKE PEDAL SPRING	1	
5	229524	WASHER 21X14.3X2	1	
6	568737	SPLIT PIN 4 X 25 (821 0425 2 2)	1	
7	652001	PIN	1	
8	567920	SPLIT PIN	1	
9	B042317	SPACER-RC LEVER	1	
10	B076455	LEVER S/ASSLY. REVERSE	1	
11	5969	CIRCLIP DIA 9 E TYPE	1	
12	6173	METALLIC PLAIN WASHER (808001026)	1	
13	108785	SPRING	1	
14	B042794	RATCHET , HAND BRAKE CONTROL	1	
15	16408	SPRING WASHER M8	1	
16	20108	HEX NUT M8	1	
17	B075697	HAND BRAKE CONTROL ASSLY	1	complete assly incl.rachet & pulley etc.
18	6411	EXT CIRCLIP DIA 11	1	
19	567899	CLEVIS PIN	1	
20	567920	SPLIT PIN	1	
21	567898	PULLEY FOR HAND BRAKE	1	
22	B075949	TMC PROTECTIVE SHIELD	1	Not Applicabel
23	B074999	HEX BOLT	3	Not Applicabel
24	6A001305	REVERSE GEAR CABLE	1	NI
25	604717	KNOB FOR R.C.	1	

92

Print Date: 07-Apr-2022

PLATE-38
WIRING HARNESS

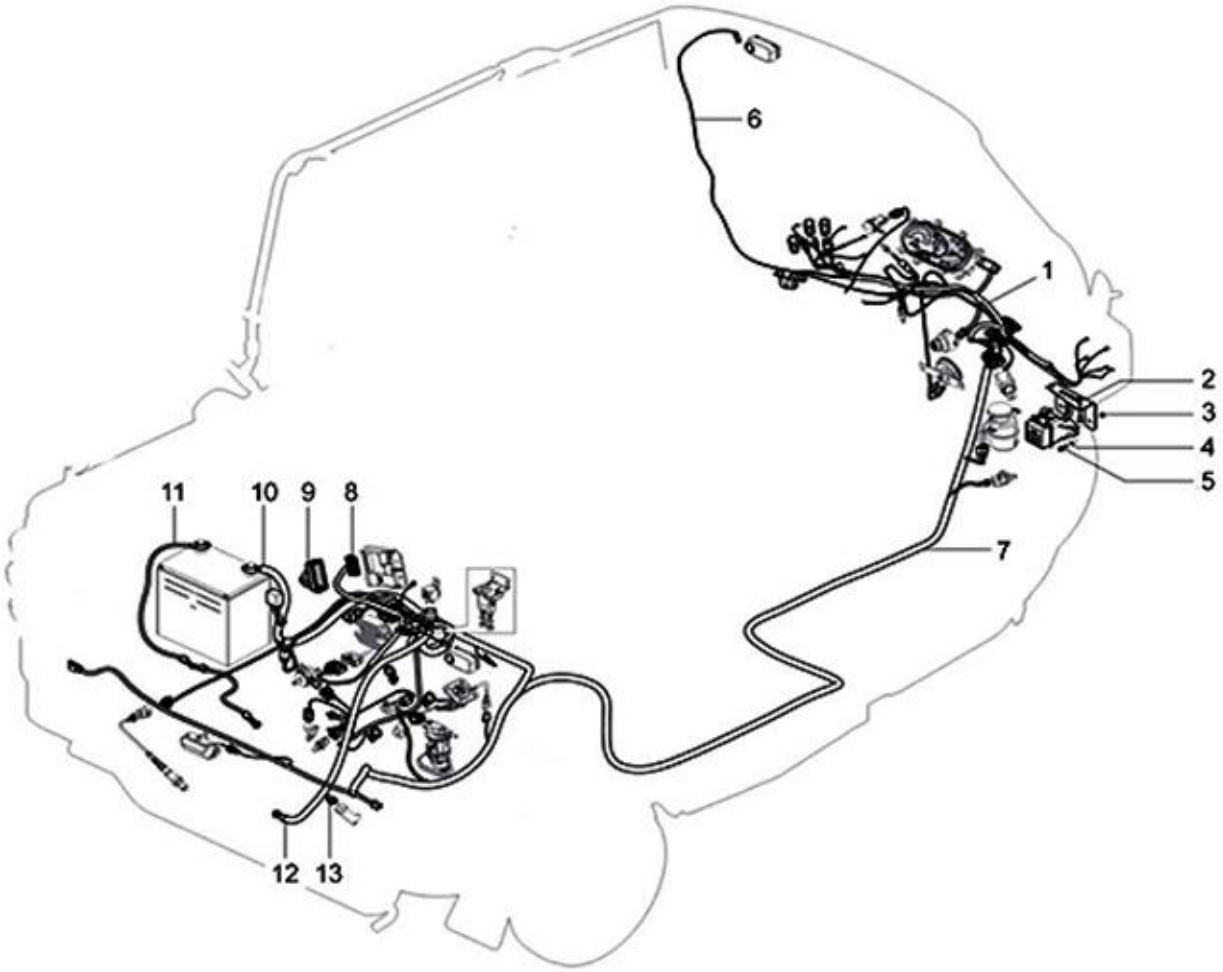
6
1
2
3
4
5
7
11
10
9
8
12
13

93

Print Date: 07-Apr-2022

PLATE-38
WIRING HARNESS

Fig. No.	Part No.	Description	Qty	Remarks
1	6D001186	WIRING HARNESS, IP	1	
2	6D000265	BKT, FUSE BOX MOUNTING FRONT ASSEMBLY	1	
3	20105	PLAIN NUT M5	4	
4	6965	SPRING WASHER DIA 5	4	
5	31058	HEX HEAD SCREW M5 X 16 CC8.8	4	
6	B073320R	PIG TAIL- CABIN LAMP (NEW)-PASSENGER	1	
7	6D001185	WIRING HARNESS, MAIN	1	
9	569160	RUBBER BOOT	1	
10	6D001187	BATTERY CABLE +VE	1	
11	B042063	BATTERY CABLE NEGATIVE	1	
12	B078213	BATTERY +VE CABLE-CUT STARTER MOTOR (LPG/CNG)	1	
13	145298	PLASTIC CLAMP	1	

94

Print Date: 07-Apr-2022

PLATE-39

ELECTRICAL DEVICES & BATTERY MOUNTING

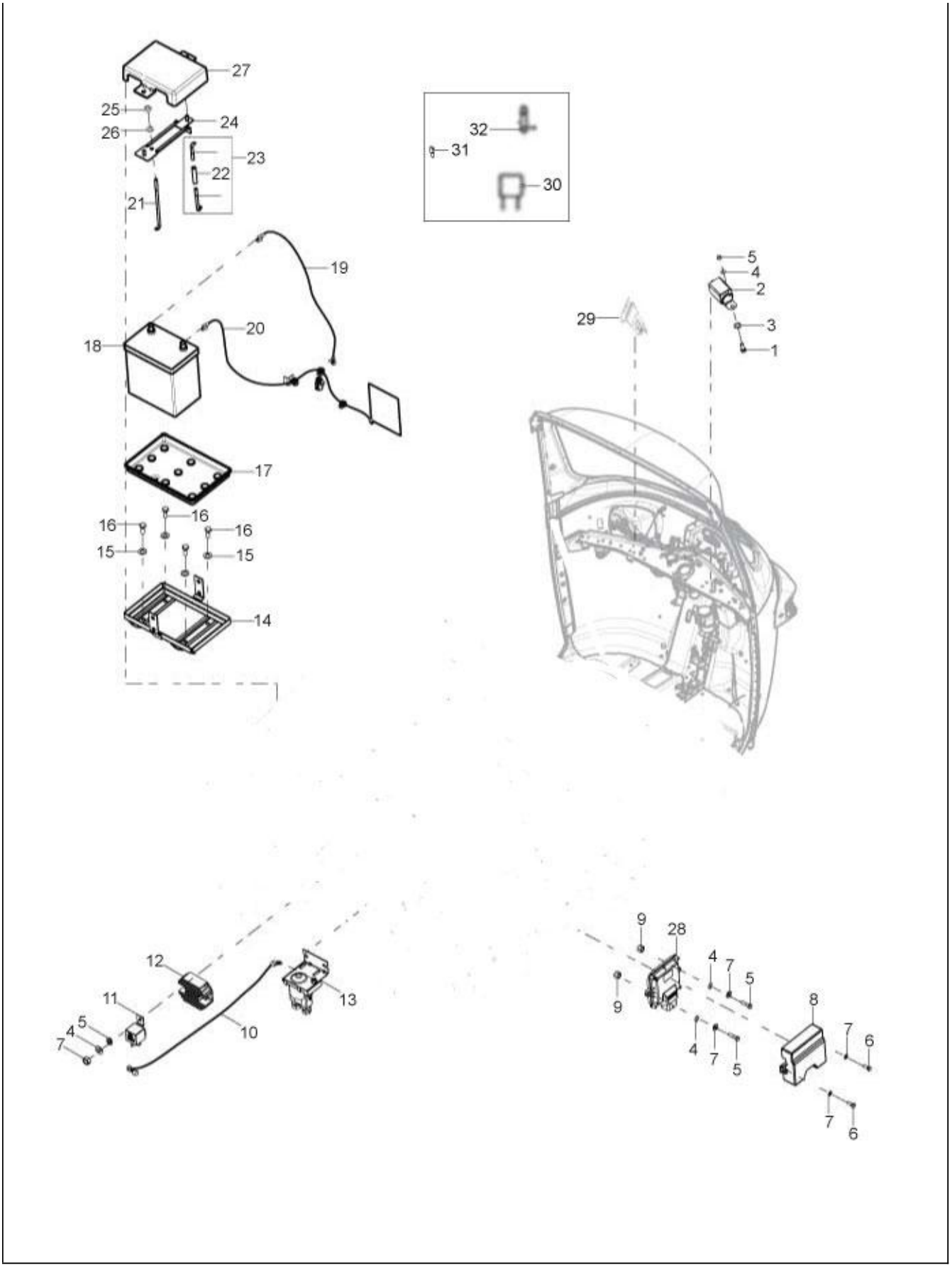
27
25
26
24
23
22
21
32
31
30
19
20
18
17
16
16
16
15
15
14
5
4
2
3
1
29
12
11
5
4
7
10
13
9
28
4
7
5
9
8
4
7
5
7
6
7
6

95

Print Date: 07-Apr-2022

PLATE-39

ELECTRICAL DEVICES & BATTERY MOUNTING

Fig. No.	Part No.	Description	Qty	Remarks
1	31057	HEX HEAD SCREW M5 X 14 CL 8.8	2	
2	6D000305	FLASHER RELAY (BG LI-IN)	1	
3	12546	PLAIN WASHER / MULTI TOOTH LOCK WASHER M5	2	
4	16405	SPRING WASHER M5	2	
5	20105	PLAIN NUT M5	2	
6	B075965	FLANGED HEX HEAD SCREW M5 X 14	2	
7	3055	PLAIN WASHER M5	1	
8	6D000550	COVER, ECU PROTECTION	1	
9	B078506	BUSH	2	
10	B078213	BATTERY +VE CABLE-CUT STARTER MOTOR (LPG/CNG)	1	
11	B023726R	REMOTE CONTROL SWITCH	1	
12	1D000671R	VOLTAGE REGULATOR	1	
13	587671R	4 ST RELAY SOLENOID	1	
14	B073740	BASE BATTERY STAND	1	
15	3056	PLAIN WASHER M6 OD12	4	
16	31088	HEX HD SCREW M6 X 16 CL 8.8 (811061623)	4	
17	616649	BATTERY TRAY	1	
18	B006544	BATTERY 12V-35AH	1	
19	B042063	BATTERY CABLE NEGATIVE	1	
20	6D001187	BATTERY CABLE +VE	1	
21	604954	TENSION ROD	1	Under Development
22	567515	REGISTER	1	
23	632508	TENSION ROD ASSY. (BATTERY MOUNTING.)	1	
24	B003978	BATTERY HOLDING PLATE	1	
25	20108	HEX NUT M8	1	
26	3058	PLAIN WASHER 15X8.4X1.5	1	
27	B003918	BATTERY COVER	1	
28	CM301417	ELECTRONIC DEVICE	1	
29	B074905	MOBILE CHARGER	1	
30	567706	FUSE 30 A	1	
31	604557	FUSE (10A)	6	
32	925786	ECU - FUSE (2A) (N.I)	1	
33	6D000480	5A MINIVAL FUSE BIEGE	7	NI
34	6D000479	10A MINIVAL FUSE RED	4	NI
35	6D000481	15A MINIVAL FUSE BLUE	2	NI

96

Print Date: 07-Apr-2022

PLATE-39

ELECTRICAL DEVICES & BATTERY MOUNTING

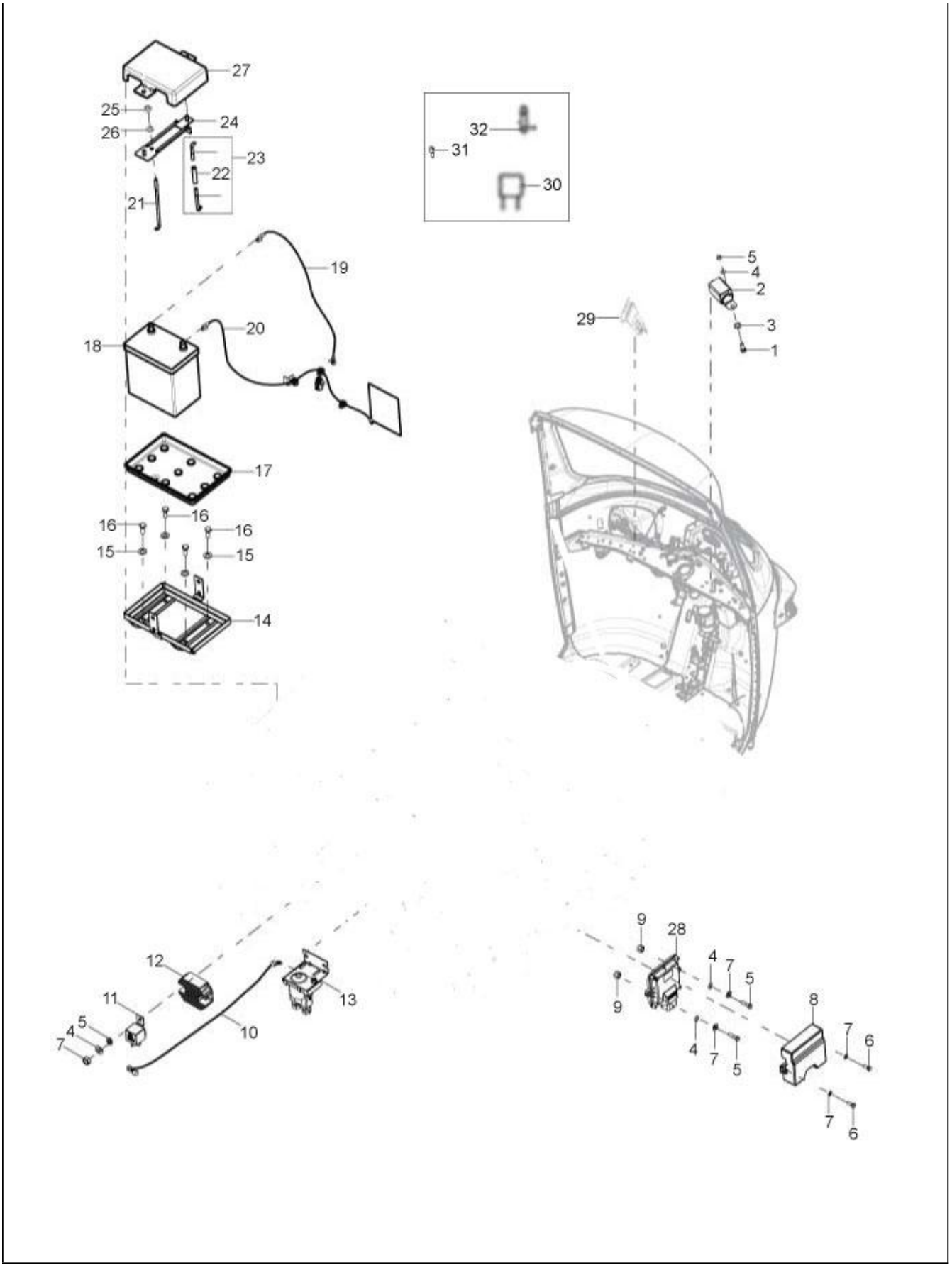
27
25
26
24
23
22
21
32
31
30
19
20
18
17
16
16
16
15
15
14
5
4
2
3
1
29
12
11
5
4
7
10
13
9
28
4
7
5
9
8
7
6
4
7
5
7
6

97

Print Date: 07-Apr-2022

PLATE-39

ELECTRICAL DEVICES & BATTERY MOUNTING

Fig. No.	Part No.	Description	Qty	Remarks
36	6D000478	20A MINIVAL FUSE YELLOW	1	NI
37	6D000482	30A MICRO RELAY	1	NI

98

Print Date: 07-Apr-2022

PLATE-40

BRAKE ASSEMBLY FRONT & REAR

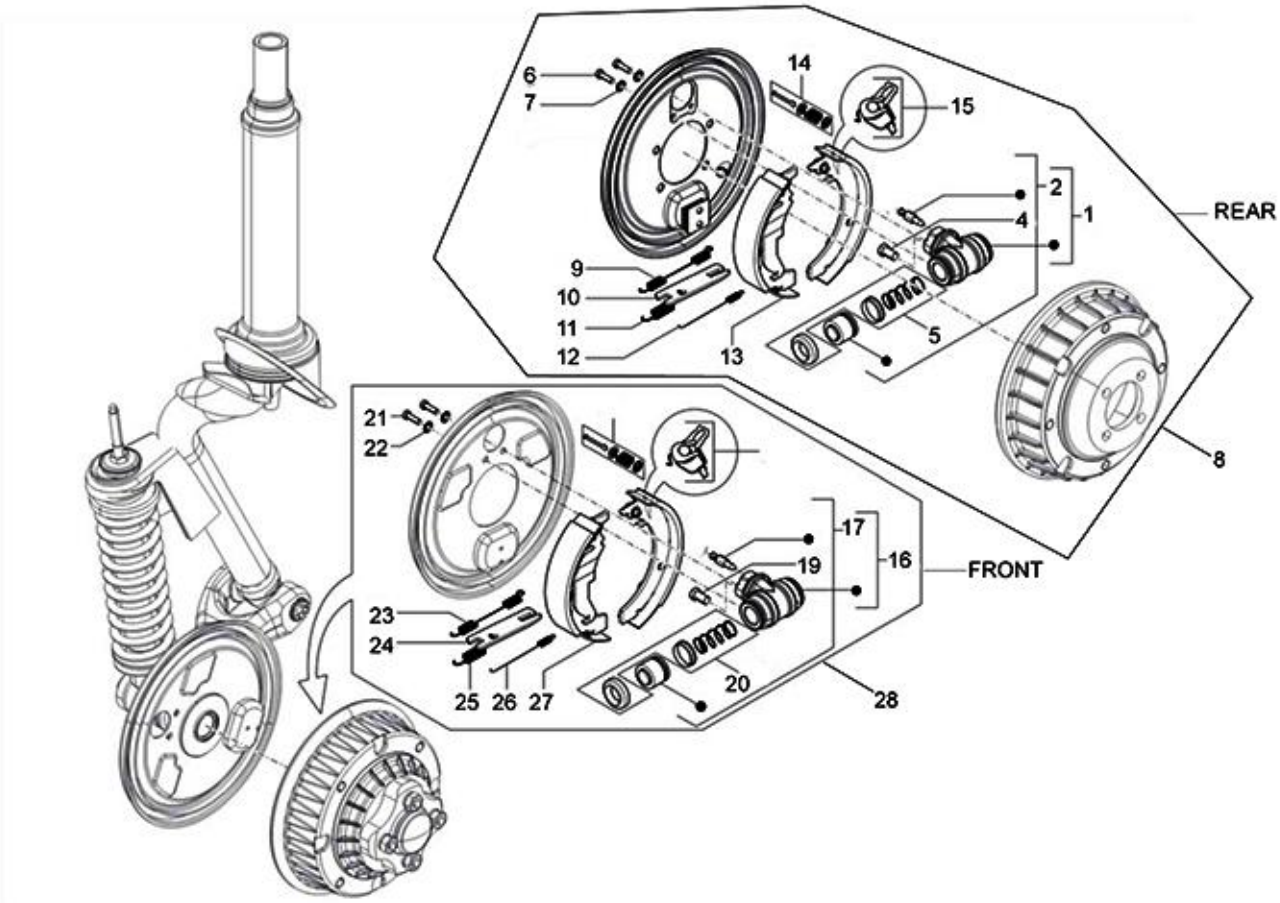
6
7
14
15
2
1
4
REAR
9
10
11
12
13
5
8
21
22
17
16
19
FRONT
23
24
25
26
27
20
28

99

Print Date: 07-Apr-2022

PLATE-40

BRAKE ASSEMBLY FRONT & REAR

Fig. No.	Part No.	Description	Qty	Remarks
1	B003014	WHEEL CYLINDER ASSY. DIA.25.4 MM	2	
2	B003328	MAJOR KIT WHEEL CYLINDER	1	
3	KIT95036	SHOE HOLD DOWN KIT	2	
4	B003300	BLEEDER SCREW	2	
5	925574	MINOR KIT WHL CYL. RR	2	
6	63440	BOLT M6X12	4	
7	12536	SPRING WASHER	4	
8	6C000271	REAR BRAKE ASSEMBLY	1	REAR LH
8	6C000342	REAR BRAKE ASSEMBLY RH	1	REAR RH
9	B003004	SHOE RETURN SPRING (UPPER)	2	
10	B003012	STRUT REAR	2	
11	B003011	STRUT SPRING RH	1	
11	B003002	STRUT SPRING	1	
12	B003003	SHOE RETURN SPRING (LOWER)	2	
13	B003331	REAR BRAKE SHOE KIT RH (NI)	1	
13	B003330	REAR BRAKE SHOE KIT LH	1	
14	KIT95036	SHOE HOLD DOWN KIT	1	
15	B006509	CLIP & PIN KIT	1	
16	B003017	WHEEL CYLINDER ASSY.	1	
17	B003324	MAJOR KIT WHEEL CYLINDER	2	
18	B006509	CLIP & PIN KIT	1	
19	B003300	BLEEDER SCREW	2	
20	B003325	MINOR KIT WHEEL CYLINDER	1	
21	63440	BOLT M6X12	2	
22	12536	SPRING WASHER	1	
23	B003003	SHOE RETURN SPRING (LOWER)	1	
24	B003002	STRUT SPRING	1	
25	B003002	STRUT SPRING	1	
26	B003003	SHOE RETURN SPRING (LOWER)	1	
27	KIT95033	FRONT BRAKE LINERS KIT	1	
28	6C000272	FRONT BRAKE ASSEMBLY	1	FRONT

100

Print Date: 07-Apr-2022

PARTS INDEX

ApeCity_Xrta_230CC_E4_PTL_EXPORT

101

Print Date: 07-Apr-2022

PART NO	BLOCK	PART NO	BLOCK	PART NO	BLOCK
000267	PLATE-10	109892	PLATE-33	13935	PLATE-21
002139	PLATE-12	111353	PLATE-2	13958	PLATE-24
006410	PLATE-13	111356	PLATE-34	140603	PLATE-21
006410	PLATE-14	111498	PLATE-34	140728	PLATE-21
006450	PLATE-14	112867R	PLATE-34	142424	PLATE-25
009101	PLATE-12	112898	PLATE-2	142425	PLATE-25
013880	PLATE-19	113278	PLATE-34	145298	PLATE-38
013880	PLATE-23	115531	PLATE-21	150041R	PLATE-30
013880	PLATE-25	116103	PLATE-25	150041R	PLATE-31
016406	PLATE-23	116333	PLATE-21	150041R	PLATE-31
016406	PLATE-25	116334	PLATE-21	150579	PLATE-32
016406	PLATE-28	116971	PLATE-21	150915R	PLATE-31
016406	PLATE-28	117401	PLATE-2	152025	PLATE-21
016406	PLATE-34	117402	PLATE-2	15335	PLATE-17
016408	PLATE-17	119735	PLATE-23	15594	PLATE-33
016408	PLATE-17	12136	PLATE-21	157103	PLATE-33
016408	PLATE-33	12138	PLATE-28	15727	PLATE-21
018639	PLATE-7	122032014	PLATE-12	15727	PLATE-30
018639	PLATE-11	125181	PLATE-28	15727	PLATE-31
018639	PLATE-13	125289	PLATE-32	157716	PLATE-23
018639	PLATE-16	12536	PLATE-40	15900	PLATE-23
018639	PLATE-19	12536	PLATE-40	15911	PLATE-24
107718	PLATE-32	12540	PLATE-21	16319	PLATE-28
107871	PLATE-32	12546	PLATE-21	163659	PLATE-21
108356	PLATE-21	12546	PLATE-31	163660	PLATE-21
108785	PLATE-37	12546	PLATE-39	163661	PLATE-21
108800	PLATE-21	127016015	PLATE-2	163663	PLATE-21
108801	PLATE-21	127111011	PLATE-14	163665	PLATE-21
108804	PLATE-21	12778	PLATE-20	163666SP	PLATE-21
108805	PLATE-21	12790	PLATE-33	163667SP	PLATE-21
108873	PLATE-32	127927R	PLATE-36	163782	PLATE-21
108874	PLATE-32	128633	PLATE-33	163784	PLATE-21
109012	PLATE-24	128804ED	PLATE-20	16405	PLATE-26
109064	PLATE-32	128805ED	PLATE-20	16405	PLATE-26
109066	PLATE-32	132129	PLATE-14	16405	PLATE-31
109117	PLATE-32	132134	PLATE-14	16405	PLATE-39
109120	PLATE-21	136916	PLATE-36	16406	PLATE-15
109121	PLATE-21	137235	PLATE-32	16406	PLATE-18
109263	PLATE-21	13812	PLATE-21	16406	PLATE-20
109265	PLATE-32	138237	PLATE-36	16406	PLATE-24
109404	PLATE-28	13861	PLATE-21	16406	PLATE-26
109775	PLATE-28	13880	PLATE-18	16406	PLATE-29
109775	PLATE-28	13880	PLATE-26	16406	PLATE-29

102

Print Date: 07-Apr-2022

PART NO	BLOCK	PART NO	BLOCK	PART NO	BLOCK
16406	PLATE-31	1A001794	PLATE-19	1A009270	PLATE-11
16408	PLATE-15	1A001795	PLATE-19	1A009302	PLATE-10
16408	PLATE-18	1A002358	PLATE-6	1A009586	PLATE-9
16408	PLATE-18	1A002685	PLATE-2	1A009587	PLATE-9
16408	PLATE-20	1A002691	PLATE-11	1A009588	PLATE-9
16408	PLATE-24	1A003509	PLATE-16	1A009589	PLATE-9
16408	PLATE-36	1A003649	PLATE-16	1A009590	PLATE-9
16408	PLATE-37	1A003720	PLATE-16	1A009591	PLATE-9
16410	PLATE-17	1A004807	PLATE-14	1A009592	PLATE-9
16410	PLATE-32	1A005176	PLATE-14	1A009593	PLATE-9
16410	PLATE-32	1A005178	PLATE-12	1A009621R	PLATE-4
16410	PLATE-33	1A006115	PLATE-12	1A009762	PLATE-8
16410	PLATE-33	1A006545	PLATE-7	1A010001	PLATE-11
165121014	PLATE-2	1A006701	PLATE-12	1A010016	PLATE-12
165155R	PLATE-14	1A006740	PLATE-11	1A010035	PLATE-12
16603	PLATE-25	1A006742	PLATE-11	1A010166	PLATE-12
16620	PLATE-28	1A006812	PLATE-8	1A010208	PLATE-13
16626	PLATE-28	1A006856	PLATE-2	1A010461	PLATE-13
16626	PLATE-28	1A006858	PLATE-9	1A010540	PLATE-13
16670	PLATE-27	1A006877	PLATE-8	1A010561	PLATE-13
16670	PLATE-27	1A006899	PLATE-6	1A010632	PLATE-14
177559	PLATE-33	1A006901	PLATE-6	1A010720	PLATE-2
180431	PLATE-32	1A006970	PLATE-12	1A010781	PLATE-15
181746	PLATE-31	1A006988	PLATE-10	1A011066	PLATE-3
181747	PLATE-31	1A007026	PLATE-2	1A011217	PLATE-2
182660R	PLATE-21	1A007028	PLATE-2	1A011246	PLATE-2
182661R	PLATE-21	1A007029	PLATE-12	1A011461	PLATE-13
182662	PLATE-21	1A007047	PLATE-8	1A011500	PLATE-8
182663	PLATE-21	1A007051	PLATE-14	1A011778	PLATE-14
183077	PLATE-21	1A007501	PLATE-13	1A011940	PLATE-13
190255	PLATE-21	1A007501	PLATE-14	1A012181	PLATE-12
192020017	PLATE-21	1A007565	PLATE-6	1A012182	PLATE-12
193724	PLATE-21	1A007605	PLATE-14	1A012334	PLATE-12
196302	PLATE-32	1A007663R	PLATE-2	1A012373	PLATE-13
196302	PLATE-33	1A007664R	PLATE-2	1A012374	PLATE-13
1A000024	PLATE-11	1A007774	PLATE-2	1A012376	PLATE-13
1A000612	PLATE-2	1A008397	PLATE-6	1A012702	PLATE-13
1A000612	PLATE-14	1A008547	PLATE-14	1A012845	PLATE-12
1A000708	PLATE-9	1A008559	PLATE-2	1A012845	PLATE-13
1A000708	PLATE-13	1A008804	PLATE-14	1A012846	PLATE-12
1A000831	PLATE-11	1A008804	PLATE-35	1A012925	PLATE-5
1A001073	PLATE-10	1A008823	PLATE-2	1A013013	PLATE-6
1A001073	PLATE-12	1A009093	PLATE-14	1A013159	PLATE-10

103

Print Date: 07-Apr-2022

PART NO	BLOCK	PART NO	BLOCK	PART NO	BLOCK
1A013629	PLATE-13	1D001198	PLATE-16	226596	PLATE-33
1A013915	PLATE-13	1D001846	PLATE-10	226661	PLATE-33
1A014335	PLATE-18	1D001894	PLATE-7	226661	PLATE-33
1A014452	PLATE-15	1D001894	PLATE-19	226662	PLATE-33
1A014870	PLATE-12	1D002080	PLATE-10	226662	PLATE-33
1A014871	PLATE-12	1D002701	PLATE-26	229524	PLATE-36
1A014872	PLATE-12	1D003477	PLATE-26	229524	PLATE-37
1A014873	PLATE-12	1E002675	PLATE-26	231370	PLATE-17
1A014874	PLATE-12	1E002771	PLATE-28	231370	PLATE-33
1A014957	PLATE-16	1E002772	PLATE-28	231370	PLATE-33
1A014958	PLATE-16	20105	PLATE-31	231370	PLATE-33
1A014959	PLATE-16	20105	PLATE-38	231370	PLATE-33
1A015505	PLATE-13	20105	PLATE-39	231370	PLATE-33
1A015692	PLATE-6	20106	PLATE-15	231370	PLATE-34
1A015812	PLATE-16	20106	PLATE-18	237246	PLATE-33
1A016737	PLATE-8	20106	PLATE-23	237246	PLATE-33
1A016964	PLATE-14	20106	PLATE-23	2383	PLATE-15
1A016964	PLATE-2	20106	PLATE-25	2383	PLATE-17
1A017112	PLATE-12	20106	PLATE-29	2383	PLATE-17
1A017254	PLATE-35	20106	PLATE-29	2383	PLATE-17
1A017410	PLATE-18	20106	PLATE-29	2383	PLATE-18
1A018038	PLATE-9	20106	PLATE-31	2383	PLATE-18
1A018094	PLATE-4	20106	PLATE-35	243303R	PLATE-33
1A018212	PLATE-9	20108	PLATE-39	261323	PLATE-24
1A018642R	PLATE-9	20108	PLATE-15	261323	PLATE-31
1A019310	PLATE-16	20108	PLATE-17	265091	PLATE-17
1A019334	PLATE-16	20108	PLATE-17	265091	PLATE-17
1A019375	PLATE-13	20108	PLATE-20	267065	PLATE-33
1A019388	PLATE-13	20108	PLATE-21	267065	PLATE-33
1A019389	PLATE-13	20108	PLATE-21	267068	PLATE-33
1A019390	PLATE-13	20108	PLATE-24	269755	PLATE-2
1A019391	PLATE-13	20108	PLATE-36	269755	PLATE-6
1A019392	PLATE-13	20108	PLATE-37	272178	PLATE-17
1A019393	PLATE-13	20110	PLATE-17	285536	PLATE-8
1A019394	PLATE-13	20110	PLATE-32	286328	PLATE-17
1A020456	PLATE-9	20110	PLATE-32	286328	PLATE-17
1A021204	PLATE-9	20110	PLATE-33	286328	PLATE-33
1B002953	PLATE-26	20110	PLATE-33	288730	PLATE-14
1D000671R	PLATE-39	20359	PLATE-33	30072	PLATE-20
1D000698	PLATE-16	21118	PLATE-33	30072	PLATE-24
1D001138	PLATE-8	21216	PLATE-36	30074	PLATE-18
1D001157	PLATE-16	220575	PLATE-14	30074	PLATE-21
1D001158	PLATE-16	226596	PLATE-33	30209R	PLATE-32

104

Print Date: 07-Apr-2022

PART NO	BLOCK	PART NO	BLOCK	PART NO	BLOCK
30242	PLATE-21	432142	PLATE-2	567920	PLATE-37
30242	PLATE-21	434541	PLATE-6	567920	PLATE-37
3054	PLATE-27	434716	PLATE-5	567990	PLATE-32
3054	PLATE-30	435571	PLATE-4	567991	PLATE-32
3055	PLATE-23	436947	PLATE-18	567992	PLATE-32
3055	PLATE-27	478261	PLATE-13	567993	PLATE-32
3055	PLATE-31	479986	PLATE-8	568095	PLATE-32
3055	PLATE-31	48197	PLATE-36	568161	PLATE-36
3055	PLATE-31	482335	PLATE-4	568689	PLATE-17
3055	PLATE-39	483711	PLATE-5	568689	PLATE-20
3056	PLATE-23	485655	PLATE-2	568692	PLATE-21
3056	PLATE-24	485703	PLATE-2	568737	PLATE-36
3056	PLATE-29	485703	PLATE-6	568737	PLATE-37
3056	PLATE-29	485868	PLATE-6	569156	PLATE-21
3056	PLATE-31	566545	PLATE-32	569157	PLATE-21
3056	PLATE-34	567454	PLATE-21	569160	PLATE-38
3056	PLATE-39	567454	PLATE-22	569165	PLATE-29
3057	PLATE-20	567455	PLATE-21	569166	PLATE-29
3058	PLATE-39	567455	PLATE-22	569177	PLATE-29
3058	PLATE-20	567456	PLATE-21	569178	PLATE-29
3058	PLATE-24	567456	PLATE-22	569193	PLATE-21
3058	PLATE-31	567457	PLATE-21	569241	PLATE-17
3058	PLATE-36	567457	PLATE-22	569241	PLATE-17
3068	PLATE-33	567458	PLATE-21	569244	PLATE-17
31056	PLATE-26	567458	PLATE-22	569244	PLATE-17
31057	PLATE-31	567459	PLATE-21	569375	PLATE-17
31057	PLATE-39	567459	PLATE-22	569377	PLATE-17
31058	PLATE-21	567461	PLATE-36	5745	PLATE-21
31058	PLATE-38	567461	PLATE-37	58273R	PLATE-6
31088	PLATE-24	567473	PLATE-32	587617	PLATE-33
31088	PLATE-25	567498R	PLATE-30	587624R	PLATE-36
31088	PLATE-39	567515	PLATE-39	587632	PLATE-36
31089	PLATE-18	567593	PLATE-23	587671R	PLATE-39
31089	PLATE-20	567593	PLATE-31	587702	PLATE-36
31089	PLATE-23	567700	PLATE-31	587829	PLATE-36
31089	PLATE-25	567706	PLATE-39	587902	PLATE-28
31089	PLATE-28	567898	PLATE-36	587904	PLATE-28
31089	PLATE-28	567898	PLATE-37	587905PC	PLATE-24
31092	PLATE-34	567899	PLATE-36	587928	PLATE-36
31116	PLATE-31	567899	PLATE-37	587928	PLATE-37
31119	PLATE-24	567920	PLATE-27	587963	PLATE-24
31122	PLATE-36	567920	PLATE-36	5969	PLATE-30
31154	PLATE-17	567920	PLATE-36	5969	PLATE-37

105

Print Date: 07-Apr-2022

PART NO	BLOCK	PART NO	BLOCK	PART NO	BLOCK
6018	PLATE-21	632995	PLATE-29	6A000068	PLATE-35
6018	PLATE-22	63440	PLATE-40	6A000070	PLATE-35
604506	PLATE-29	63440	PLATE-40	6A000209	PLATE-28
604535	PLATE-33	640762	PLATE-30	6A000477	PLATE-26
604553	PLATE-15	6411	PLATE-37	6A000804	PLATE-35
604557	PLATE-39	642032	PLATE-30	6A000816	PLATE-26
604558	PLATE-21	642537	PLATE-19	6A001305	PLATE-35
604560	PLATE-21	64263	PLATE-21	6A001305	PLATE-37
604603	PLATE-25	643149	PLATE-19	6A001373	PLATE-35
604689	PLATE-21	643367	PLATE-19	6A001637	PLATE-28
604690	PLATE-21	643613	PLATE-20	6A001834	PLATE-35
604707	PLATE-21	643684R	PLATE-20	6A001894	PLATE-26
604707	PLATE-22	643685R	PLATE-20	6A001906	PLATE-26
604717	PLATE-37	643691	PLATE-27	6A001940	PLATE-16
604751	PLATE-20	643692	PLATE-36	6B000250	PLATE-21
604756	PLATE-15	643704R	PLATE-31	6B000251	PLATE-21
604756	PLATE-15	643705R	PLATE-31	6B000377	PLATE-25
604758	PLATE-32	643741	PLATE-33	6B000378	PLATE-25
604759	PLATE-32	643741	PLATE-33	6B000387ED	PLATE-24
604760	PLATE-36	643772R	PLATE-32	6B001118	PLATE-24
604760	PLATE-37	644814R	PLATE-36	6B001140	PLATE-24
604761	PLATE-20	644852	PLATE-24	6B001140	PLATE-24
604785	PLATE-20	645128	PLATE-24	6B001204R	PLATE-24
604812	PLATE-21	645141	PLATE-24	6B001207R	PLATE-24
604948	PLATE-17	652001	PLATE-36	6B001486	PLATE-24
604954	PLATE-39	652001	PLATE-37	6B001921	PLATE-24
605389	PLATE-21	660168	PLATE-23	6B001946	PLATE-24
60565	PLATE-28	660168	PLATE-24	6B001947	PLATE-24
6066	PLATE-32	660168	PLATE-27	6B003178	PLATE-27
6066	PLATE-33	660168	PLATE-31	6B003427BL	PLATE-20
6078	PLATE-21	660175	PLATE-20	6B003427BW	PLATE-20
6078	PLATE-27	661262	PLATE-20	6B003427BY	PLATE-20
6078	PLATE-31	661266	PLATE-33	6B003427CB	PLATE-20
616649	PLATE-39	661266	PLATE-33	6B003427CO	PLATE-20
6173	PLATE-29	661267	PLATE-33	6B003427EG	PLATE-20
6173	PLATE-37	661282	PLATE-33	6B003427GY	PLATE-20
6177	PLATE-21	661925	PLATE-27	6B003427NB	PLATE-20
62961	PLATE-21	661925	PLATE-31	6B003427PA	PLATE-20
632158	PLATE-28	662323	PLATE-20	6B003427PB	PLATE-20
632158	PLATE-28	6650	PLATE-33	6B003427WR	PLATE-20
632238	PLATE-21	6733	PLATE-32	6C000016	PLATE-34
632292	PLATE-29	6965	PLATE-21	6C000041	PLATE-34
632508	PLATE-39	6965	PLATE-38	6C000190	PLATE-32

106

Print Date: 07-Apr-2022

PART NO	BLOCK	PART NO	BLOCK	PART NO	BLOCK
6C000191	PLATE-32	6D001187	PLATE-38	925786	PLATE-39
6C000231	PLATE-33	6D001187	PLATE-39	940028	PLATE-14
6C000271	PLATE-40	6G000115	PLATE-27	940028	PLATE-14
6C000272	PLATE-40	6G000115	PLATE-31	940066	PLATE-32
6C000272	PLATE-32	7066R	PLATE-2	940069	PLATE-15
6C000312R	PLATE-34	74414	PLATE-32	940071	PLATE-15
6C000342	PLATE-40	74521	PLATE-32	940072	PLATE-15
6C000377	PLATE-26	75708	PLATE-32	940162	PLATE-23
6C000430	PLATE-21	78307	PLATE-23	963486	PLATE-4
6C000430	PLATE-22	78307	PLATE-25	97756	PLATE-21
6C000430	PLATE-32	808000826	PLATE-20	97756	PLATE-21
6C000430	PLATE-33	8080	PLATE-23	AP8104614	PLATE-26
6C000443	PLATE-36	8080	PLATE-27	B001301	PLATE-32
6C000465SP	PLATE-32	8080	PLATE-31	B001315	PLATE-21
6C000468	PLATE-36	812061656	PLATE-32	B001315	PLATE-22
6C000469	PLATE-36	812061656	PLATE-33	B001315	PLATE-32
6C000471SP	PLATE-32	82635R	PLATE-8	B001315	PLATE-33
6C000530	PLATE-33	829504	PLATE-16	B001316	PLATE-21
6D000143R	PLATE-23	829661	PLATE-2	B001316	PLATE-22
6D000143R	PLATE-31	83040R	PLATE-6	B001316	PLATE-32
6D000144R	PLATE-23	83041R	PLATE-6	B001316	PLATE-33
6D000144R	PLATE-31	83054R	PLATE-5	B002847	PLATE-21
6D000145R	PLATE-23	843000500	PLATE-14	B002848	PLATE-21
6D000145R	PLATE-31	843307	PLATE-5	B003002	PLATE-40
6D000146R	PLATE-23	8451	PLATE-21	B003002	PLATE-40
6D000146R	PLATE-31	847928	PLATE-6	B003002	PLATE-40
6D000265	PLATE-31	87067	PLATE-32	B003003	PLATE-40
6D000265	PLATE-38	87067	PLATE-32	B003003	PLATE-40
6D000305	PLATE-31	872816	PLATE-19	B003003	PLATE-40
6D000305	PLATE-39	8771	PLATE-32	B003004	PLATE-40
6D000322	PLATE-27	8808	PLATE-21	B003011	PLATE-40
6D000417	PLATE-31	884222808	PLATE-2	B003012	PLATE-40
6D000478	PLATE-39	8847	PLATE-21	B003014	PLATE-40
6D000479	PLATE-39	89281	PLATE-21	B003017	PLATE-40
6D000480	PLATE-39	920083	PLATE-31	B003228	PLATE-36
6D000481	PLATE-39	920084	PLATE-31	B003282	PLATE-26
6D000481	PLATE-31	920088	PLATE-15	B003286	PLATE-17
6D000482	PLATE-39	925571	PLATE-29	B003300	PLATE-40
6D000550	PLATE-31	925574	PLATE-40	B003300	PLATE-40
6D000550	PLATE-39	925581	PLATE-23	B003324	PLATE-40
6D001084	PLATE-26	925581	PLATE-31	B003325	PLATE-40
6D001185	PLATE-38	925581	PLATE-31	B003328	PLATE-40
6D001186	PLATE-38	925603	PLATE-31	B003330	PLATE-40

107

Print Date: 07-Apr-2022

PART NO	BLOCK	PART NO	BLOCK	PART NO	BLOCK
B003331	PLATE-40	B017456	PLATE-5	B073526ED	PLATE-20
B003864	PLATE-21	B017746	PLATE-6	B073690	PLATE-32
B003865	PLATE-21	B018442	PLATE-16	B073740	PLATE-39
B003918	PLATE-39	B018464	PLATE-12	B073810	PLATE-27
B003978	PLATE-39	B018464	PLATE-13	B073811	PLATE-27
B006509	PLATE-40	B018533	PLATE-7	B073812	PLATE-27
B006509	PLATE-40	B018718	PLATE-6	B073813	PLATE-27
B006544	PLATE-39	B018853	PLATE-9	B073814	PLATE-27
B006582	PLATE-24	B018853	PLATE-13	B073817	PLATE-28
B008915	PLATE-32	B018853	PLATE-16	B073848	PLATE-28
B014063	PLATE-19	B018854	PLATE-5	B073849	PLATE-28
B014066	PLATE-19	B018946	PLATE-6	B073850R	PLATE-30
B014555	PLATE-4	B019047	PLATE-11	B073872	PLATE-23
B014684	PLATE-5	B023726R	PLATE-39	B073875	PLATE-23
B014705	PLATE-5	B023786R	PLATE-36	B073875SL	PLATE-23
B014706	PLATE-5	B023940	PLATE-34	B073875SL	PLATE-25
B014732	PLATE-7	B024373	PLATE-33	B073882BL	PLATE-23
B014755	PLATE-2	B024373	PLATE-33	B073882BL	PLATE-25
B014760	PLATE-6	B024532	PLATE-27	B073882BW	PLATE-23
B015288	PLATE-5	B024532	PLATE-31	B073882BW	PLATE-25
B015483	PLATE-6	B024614	PLATE-34	B073882CB	PLATE-23
B015592	PLATE-2	B024733	PLATE-21	B073882CB	PLATE-25
B015598	PLATE-8	B024734	PLATE-21	B073882EG	PLATE-23
B015943	PLATE-8	B041774	PLATE-35	B073882EG	PLATE-25
B016120	PLATE-9	B041774	PLATE-36	B073882GY	PLATE-23
B016144	PLATE-3	B042063	PLATE-38	B073882GY	PLATE-25
B016148	PLATE-9	B042063	PLATE-39	B073882LB	PLATE-25
B016192	PLATE-11	B042317	PLATE-37	B073882NB	PLATE-23
B016368	PLATE-5	B042486	PLATE-2	B073882NB	PLATE-25
B016552	PLATE-19	B042599	PLATE-36	B073882PA	PLATE-25
B016611	PLATE-12	B042612	PLATE-25	B073882PB	PLATE-25
B016620	PLATE-11	B042612	PLATE-25	B073882SL	PLATE-25
B016774	PLATE-9	B042693	PLATE-36	B073882WR	PLATE-23
B016774	PLATE-6	B042703	PLATE-21	B073882WR	PLATE-25
B016939	PLATE-5	B042794	PLATE-37	B073953	PLATE-23
B017113	PLATE-6	B042814	PLATE-21	B073969	PLATE-23
B017165	PLATE-6	B073320R	PLATE-38	B073969	PLATE-31
B017189	PLATE-9	B073441	PLATE-15	B073970	PLATE-23
B017323	PLATE-6	B073469	PLATE-35	B074033	PLATE-23
B017323	PLATE-6	B073478R	PLATE-30	B074033	PLATE-31
B017431	PLATE-6	B073479R	PLATE-30	B074063	PLATE-23
B017431	PLATE-6	B073481R	PLATE-30	B074063	PLATE-25
B017438	PLATE-5	B073523ED	PLATE-20	B074173	PLATE-21

108

Print Date: 07-Apr-2022

PART NO	BLOCK	PART NO	BLOCK	PART NO	BLOCK
B074261	PLATE-27	B076050CO	PLATE-20	B078272	PLATE-23
B074261	PLATE-27	B076050EG	PLATE-20	B078272	PLATE-31
B074262	PLATE-27	B076050GY	PLATE-20	B078274	PLATE-23
B074275	PLATE-27	B076050NB	PLATE-20	B078274	PLATE-31
B074433	PLATE-23	B076050PA	PLATE-20	B078286R	PLATE-23
B074433	PLATE-31	B076050PB	PLATE-20	B078286R	PLATE-31
B074434	PLATE-23	B076050WR	PLATE-20	B078506	PLATE-39
B074434	PLATE-31	B076078	PLATE-35	B079248	PLATE-28
B074539	PLATE-23	B076098ED	PLATE-24	CM284001	PLATE-4
B074539	PLATE-31	B076111	PLATE-15	CM284002	PLATE-4
B074568	PLATE-30	B076112	PLATE-15	CM284003	PLATE-4
B074905	PLATE-39	B076120	PLATE-23	CM293932	PLATE-1
B074999	PLATE-37	B076120	PLATE-25	CM301417	PLATE-39
B075186ED	PLATE-20	B076143	PLATE-18	CM301417	PLATE-31
B075254	PLATE-24	B076205	PLATE-17	CM308302	PLATE-14
B075337	PLATE-26	B076205	PLATE-20	CM308402	PLATE-14
B075459	PLATE-17	B076208	PLATE-35	D9166140616	PLATE-26
B075495	PLATE-37	B076290	PLATE-33	E500405518	PLATE-21
B075593	PLATE-18	B076292	PLATE-33	KIT1U000020	PLATE-5
B075595	PLATE-17	B076303	PLATE-29	KIT940003R	PLATE-32
B075687ED	PLATE-28	B076304	PLATE-29	KIT95007B	PLATE-2
B075694	PLATE-32	B076305	PLATE-35	KIT95007R	PLATE-2
B075697	PLATE-36	B076364	PLATE-35	KIT95007Y	PLATE-2
B075697	PLATE-37	B076448	PLATE-30	KIT95011R	PLATE-5
B075707	PLATE-26	B076455	PLATE-37	KIT95021R	PLATE-32
B075716	PLATE-35	B076605	PLATE-23	KIT95022R	PLATE-32
B075732	PLATE-27	B076605	PLATE-31	KIT95033	PLATE-40
B075798	PLATE-33	B076606	PLATE-23	KIT95036	PLATE-40
B075807	PLATE-33	B076606	PLATE-31	KIT95036	PLATE-40
B075808	PLATE-33	B076650R	PLATE-21	KIT95105R	PLATE-2
B075835	PLATE-36	B076650R	PLATE-22	KIT96016R	PLATE-32
B075836	PLATE-36	B077155	PLATE-36	KIT96028R	PLATE-2
B075949	PLATE-37	B077156	PLATE-36	KIT96033R	PLATE-32
B075965	PLATE-31	B077245	PLATE-32	KIT96054R	PLATE-4
B075965	PLATE-31	B077245	PLATE-33	KIT96055R	PLATE-4
B075965	PLATE-31	B077327	PLATE-20	NS	PLATE-12
B075965	PLATE-39	B077458	PLATE-33	NS	PLATE-24
B076007	PLATE-26	B077461	PLATE-32	NS	PLATE-24
B076007	PLATE-36	B077465	PLATE-32	NS	PLATE-24
B076050BL	PLATE-20	B077480	PLATE-36	NS	PLATE-5
B076050BW	PLATE-20	B077481	PLATE-33	NS	PLATE-5
B076050BY	PLATE-20	B078213	PLATE-38	NS	PLATE-29
B076050CB	PLATE-20	B078213	PLATE-39	NS	PLATE-29

109