Parts Catalog

Commercial Vehicle

ape City Plus Diesel BS-IV

PIAGGIO VEHICLES PRIVATE LIMITED
Registered Office: Bund Garden Road ,Opp. Residency Club , Pune (India)

Print Date: 05-Oct-2022

PLATES INDEX

Sr No.	Plate Name	Plate No.	Page No.
1	ENGINE	1	1-2
2	CRANKCASE ASSEMBLY	2	3-4
3	CYLINDER & PISTON	3	5-6
4	CRANKSHAFT SUPPORT	4	7-8
5	PTO COVER	5	9-10
6	CYLINDER HEAD & DECOMPRESSION LEVER	6	11-12
7	OIL FILTER & PRESSURE RELIEF VALVE	7	13-14
8	OIL PAN	8	15-16
9	ROCKER ARM COVER	9	17-18
10	LUB OIL PUMP & SPEED GOVERNOR	10	19-20
11	REMOTE THROTTLE & STOP CONTROL	11	21-22
12	AIR SHROUD/ FLYWHEEL/ PULLEY/ ELECTRICAL START SYSTEM COMPONENTS	12	23-24
13	CONNECTING ROD/CRANK SHAFT	13	25-26
14	AIR CLEANER / EXHAUST MUFFLER	14	27-30
15	INJECTOR	15	31-32
16	FUEL PUMP	16	33-34
17	CAM SHAFT, ROD & ROCKER RAM	17	35-36
18	EXTERNAL FUEL FILTER&FUEL PIPES	18	37-38
19	FEED PUMP	19	39-40
20	AIR FILTER MOUNTING & ENGINE HOSE	20	41-42
21	ENGINE SIDE COVER & MAIN HOUSING	21	43-44
22	MAINSHAFT SPEEDGEAR AND CLUSTER GEAR	22	45-46
23	DIFFERENTIAL UNIT, FARE METER HOUSING, SPEEDO DRIVE	23	47-52
24	CLUCTH & CLUCTH COVER	24	53-56
25	GEAR SHIFTER AND ITS CONTROL MECHANISM	25	57-58
26	ENGINE SUPPORT	26	59-62
27	MAIN FRAME/BATTERY BKT	27	63-64
28	WIND SHIELD/GLASS/BEADING	28	65-66
29	ELECTRICAL DEVICES	29	67-72
30	FRONT MUDGUARD & HEAD LAMP ASSY.	30	73-76

Print Date: 05-Oct-2022

PLATES INDEX

Sr No.	Plate Name	Plate No.	Page No.
31	DASHBOARD ASSEMBLY	31	77-78
32	REAR SUSPENSION	32	79-82
33	STEERING COLUMN AND FRONT SUSPENSION	33	83-86
34	HANDLE BAR AND CONTROL	34	87-88
35	BRAKE - TANDEM MASTER CYLINDER ,BRAKE PIPE AND HAND BRAKES	35	89-92
36	PASSENGER BODY, HOOD FRAME & SEATS	36	93-96
37	WIRING HARNESS	37	97-98
38	FRONT BRAKE ASSEMBLY	38	99-100
39	REAR BRAKE ASSEMBLY	39	101-102
40	TOOLS & ACCESSORIES	40	103-106
41	CABLES	41	107-108
42	FUEL TANK ASSEMBLY	18.1	109-110
43	ALUMINIUM CLUTCH ASSEMBLY	24.1	111-112
44	CLUTCH & COVER ASSEMBLY (FOR ALUMINIUM CLUTCH)	24.2	113-114

Print Date: 05-Oct-2022

PICTORIAL PLATES INDEX

PLATE-1 ENGINE

Page No. :1-2

PLATE-2 CRANKCASE ASSEMBLY

Page No. :3-4

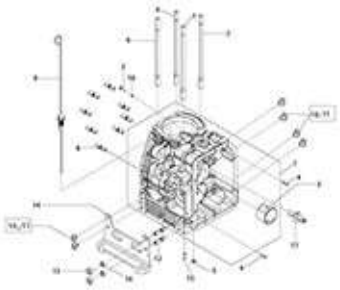

PLATE-3 CYLINDER & PISTON

Page No. :5-6

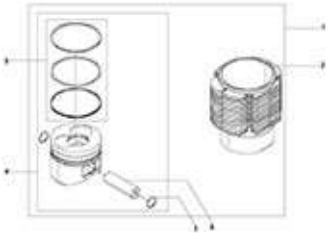

PLATE-4 CRANKSHAFT SUPPORT

Page No. :7-8

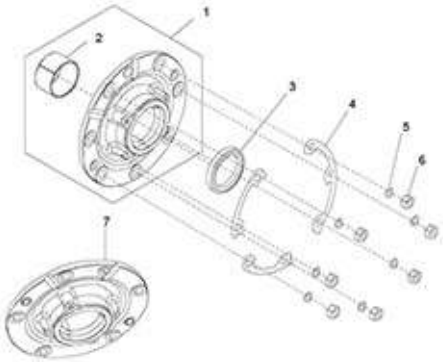

PLATE-5 PTO COVER

Page No. :9-10

PLATE-6 CYLINDER HEAD & DECOMPRESSION LEVER

Page No. :11-12

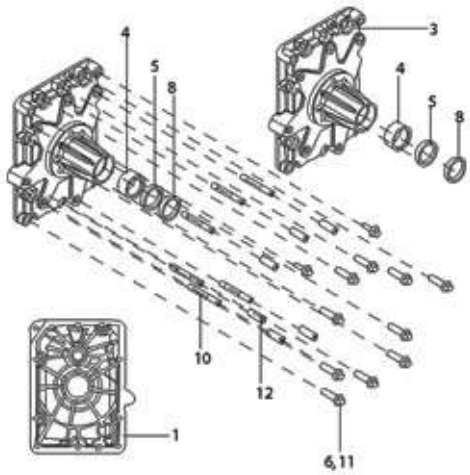

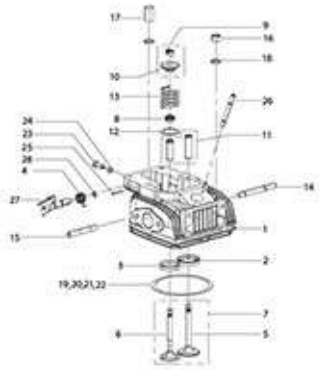

PLATE-7 **OIL FILTER & PRESSURE RELIEF VALVE**

Page No. :13-14

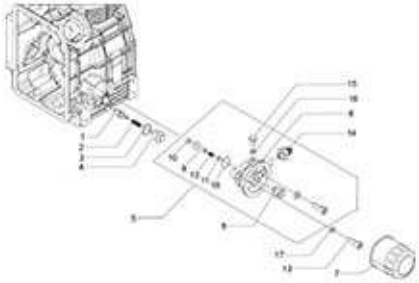

PLATE-8 **OIL PAN**

Page No. :15-16

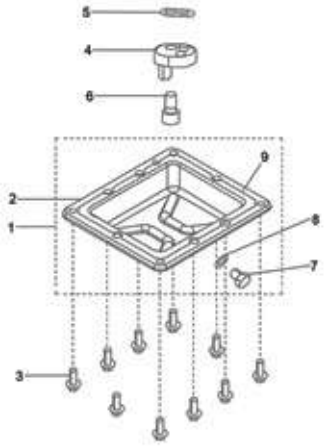

Print Date: 05-Oct-2022

PICTORIAL PLATES INDEX

PLATE-9 ROCKER ARM COVER

Page No. :17-18

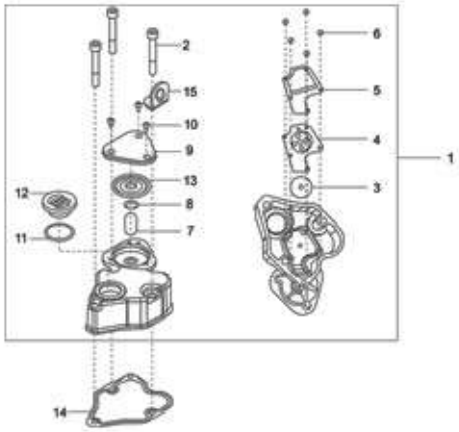

PLATE-10 LUB OIL PUMP & SPEED GOVERNOR

Page No. :19-20

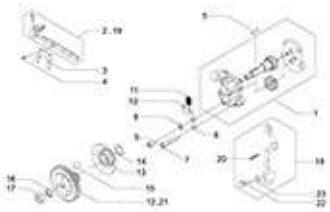

PLATE-11 REMOTE THROTTLE & STOP CONTROL

Page No. :21-22

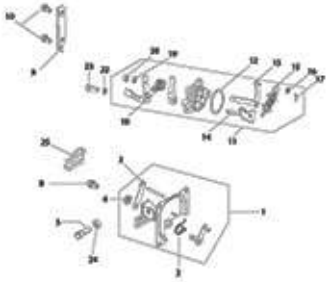

PLATE-12 AIR SHROUD/ FLYWHEEL/ PULLEY/ ELECTRICAL START SYSTEM COMPONENTS

Page No. :23-24

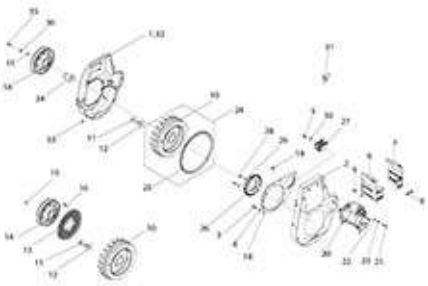

PLATE-13 CONNECTING ROD/CRANK SHAFT

Page No. :25-26

PLATE-14 AIR CLEANER / EXHAUST MUFFLER

Page No. :27-30

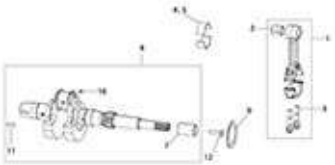

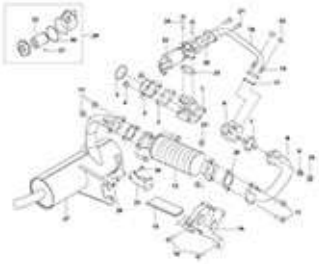

PLATE-15 INJECTOR

Page No. :31-32

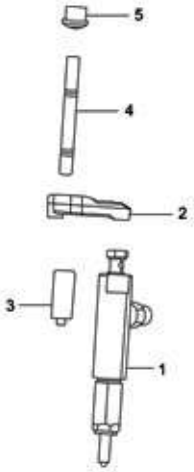

PLATE-16 FUEL PUMP

Page No. :33-34

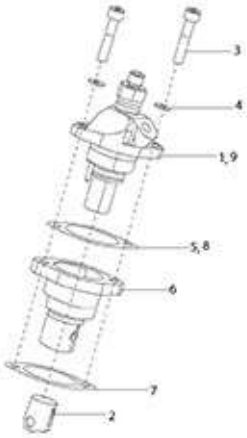

Print Date: 05-Oct-2022

PICTORIAL PLATES INDEX

PLATE-17 CAM SHAFT, ROD & ROCKER RAM

Page No. :35-36

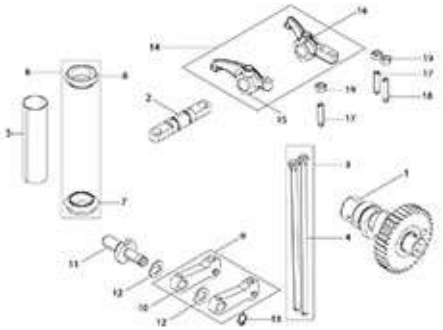

PLATE-18 EXTERNAL FUEL FILTER&FUEL PIPES

Page No. :37-38

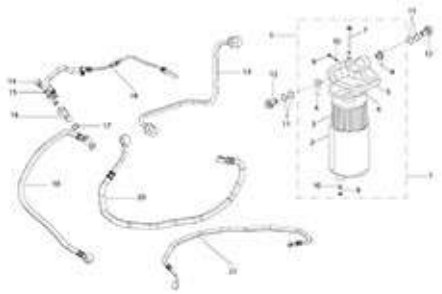

PLATE-19 FEED PUMP

Page No. :39-40

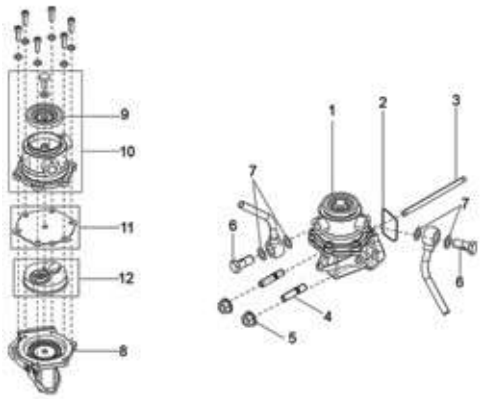

PLATE-20 AIR FILTER MOUNTING & ENGINE HOSE

Page No. :41-42

PLATE-21 ENGINE SIDE COVER & MAIN HOUSING

Page No. :43-44

PLATE-22 MAINSHAFT SPEEDGEAR AND CLUSTER GEAR

Page No. :45-46

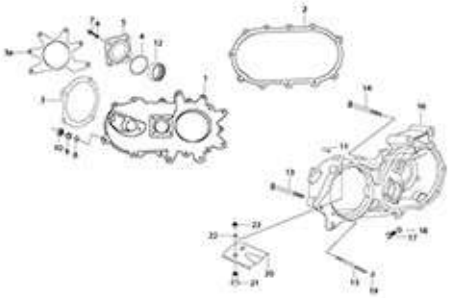

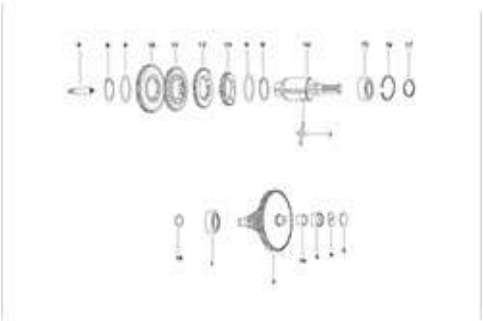

PLATE-23 **DIFFERENTIAL UNIT, FARE METER HOUSING, SPEEDO DRIVE**

Page No. :47-52

PLATE-24 **CLUCTH & CLUCTH COVER**

Page No. :53-56

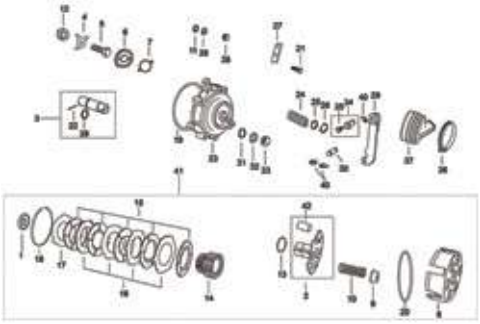

Print Date: 05-Oct-2022

PICTORIAL PLATES INDEX

PLATE-25 **GEAR SHIFTER AND ITS CONTROL MECHANISM**

Page No. :57-58

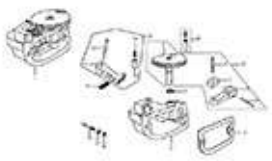

PLATE-26 **ENGINE SUPPORT**

Page No. :59-62

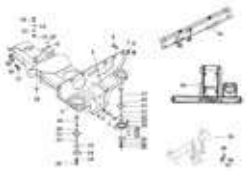

PLATE-27 **MAIN FRAME/BATTERY BKT**

Page No. :63-64

PLATE-28 **WIND SHIELD/GLASS/BEADING**

Page No. :65-66

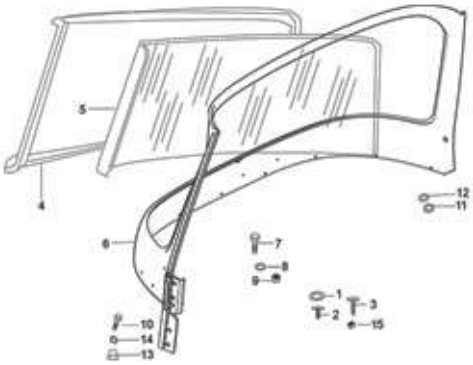

PLATE-29 **ELECTRICAL DEVICES**

Page No. :67-72

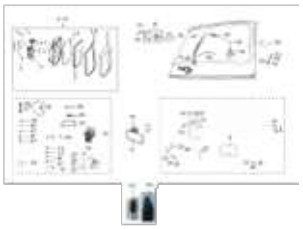

PLATE-30 **FRONT MUDGUARD & HEAD LAMP ASSY.**

Page No. :73-76

PLATE-31 **DASHBOARD ASSEMBLY**

Page No. :77-78

PLATE-32 **REAR SUSPENSION**

Page No. :79-82

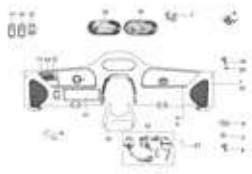

Print Date: 05-Oct-2022

PICTORIAL PLATES INDEX

PLATE-33 **STEERING COLUMN AND FRONT SUSPENSION**

Page No. :83-86

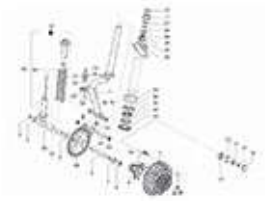

PLATE-34 **HANDLE BAR AND CONTROL**

Page No. :87-88

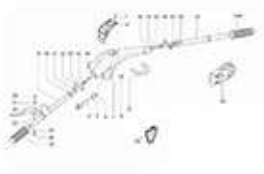

PLATE-35 **BRAKE - TANDEM MASTER CYLINDER ,BRAKE PIPE AND HAND BRAKES**

Page No. :89-92

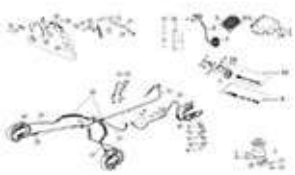

PLATE-36 **PASSENGER BODY, HOOD FRAME & SEATS**

Page No. :93-96

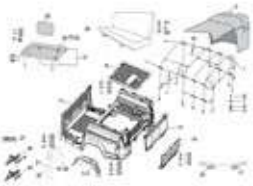

PLATE-37 **WIRING HARNESS**

Page No. :97-98

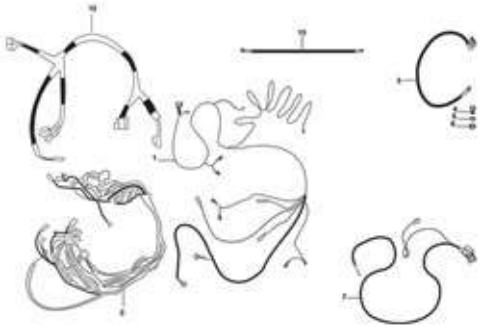

PLATE-38 **FRONT BRAKE ASSEMBLY**

Page No. :99-100

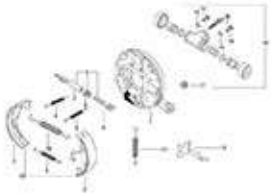

PLATE-39 **REAR BRAKE ASSEMBLY**

Page No. :101-102

PLATE-40 **TOOLS & ACCESSORIES**

Page No. :103-106

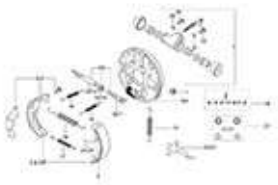

Print Date: 05-Oct-2022

PICTORIAL PLATES INDEX

PLATE-41 CABLES

Page No. :107-108

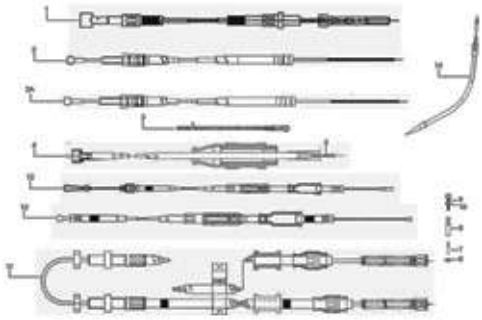

PLATE-18.1 FUEL TANK ASSEMBLY

Page No. :109-110

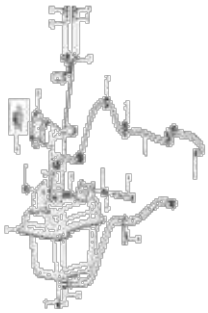

PLATE-24.1 ALUMINIUM CLUTCH ASSEMBLY

Page No. :111-112

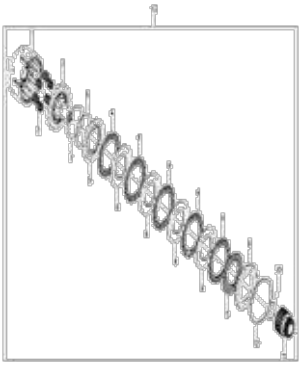

PLATE-24.2 CLUTCH & COVER ASSEMBLY (FOR ALUMINIUM CLUTCH)

Page No. :113-114

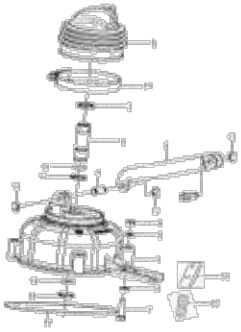

Print Date: 05-Oct-2022

PLATE-1
ENGINE

1

1

Print Date: 05-Oct-2022

PLATE-1
ENGINE

Fig. No.	Part No.	Description	Qty	Remarks
1	B076742	ENGINE GL435 BSIV DSL 501 PASSENGER	1	

2

Print Date: 05-Oct-2022

PLATE-2
CRANKCASE ASSEMBLY

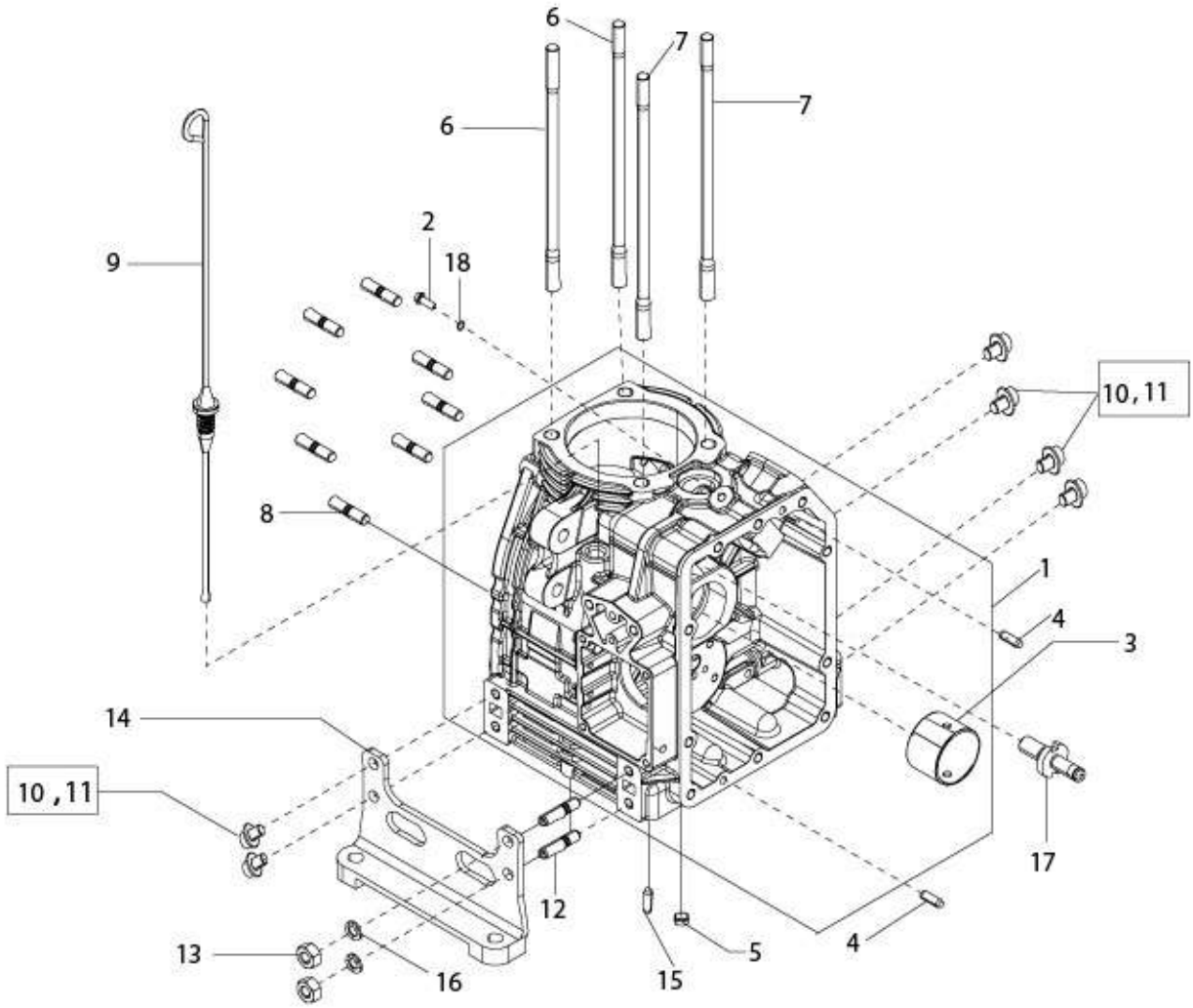
6
7
6
7
2
18
9
10,11
8
1
4
3
14
10,11
17
12
13
16
15
5
4

3

Print Date: 05-Oct-2022

PLATE-2

CRANKCASE ASSEMBLY

Fig. No.	Part No.	Description	Qty	Remarks
1	E10A010006	CRANK CASE ASSLY WITH BUSH (WITH AVM PAD)	1	WITH AVM PAD
2	ED43340	GUIDING BOLT	1	
3	E40002263	BUSH CRANKCASE STD	1	
4	E276846055	DOWEL -PIN	2	
5	E500197087	SLEEVE - OIL PAN IN CRANK CASE	2	
6	E43500539	STUD CYLINDER HEAD	2	
7	E43500540	STUD CYLINDER HEAD ROCKER SHAFT	2	
8	E271678054	STUD FWE SIDE	7	
9	E10G090002	DIPSTICK	1	
10	E50002805	COLLER BOLT M8 X 1.25 X 22	6	
11	E50002805	COLLER BOLT M8 X 1.25 X 22	2	FOR FRONT MTG
12	E50000506	STUD M8X1.25X34	2	FOR REAR MTG
13	E45324016	NUT	2	FOR REAR MTG
14	E400106100	ENGINE FEET.	2	FOR FRONT MTG
15	E500843036	DOWEL PIN	1	
16	E1756507	SPRING WASHER M8	2	
17	ED30956	PIN LH THREAD	1	
18	ED40642	WASHER (BSII) (N.I.)	1	

4

Print Date: 05-Oct-2022

PLATE-3
CYLINDER & PISTON

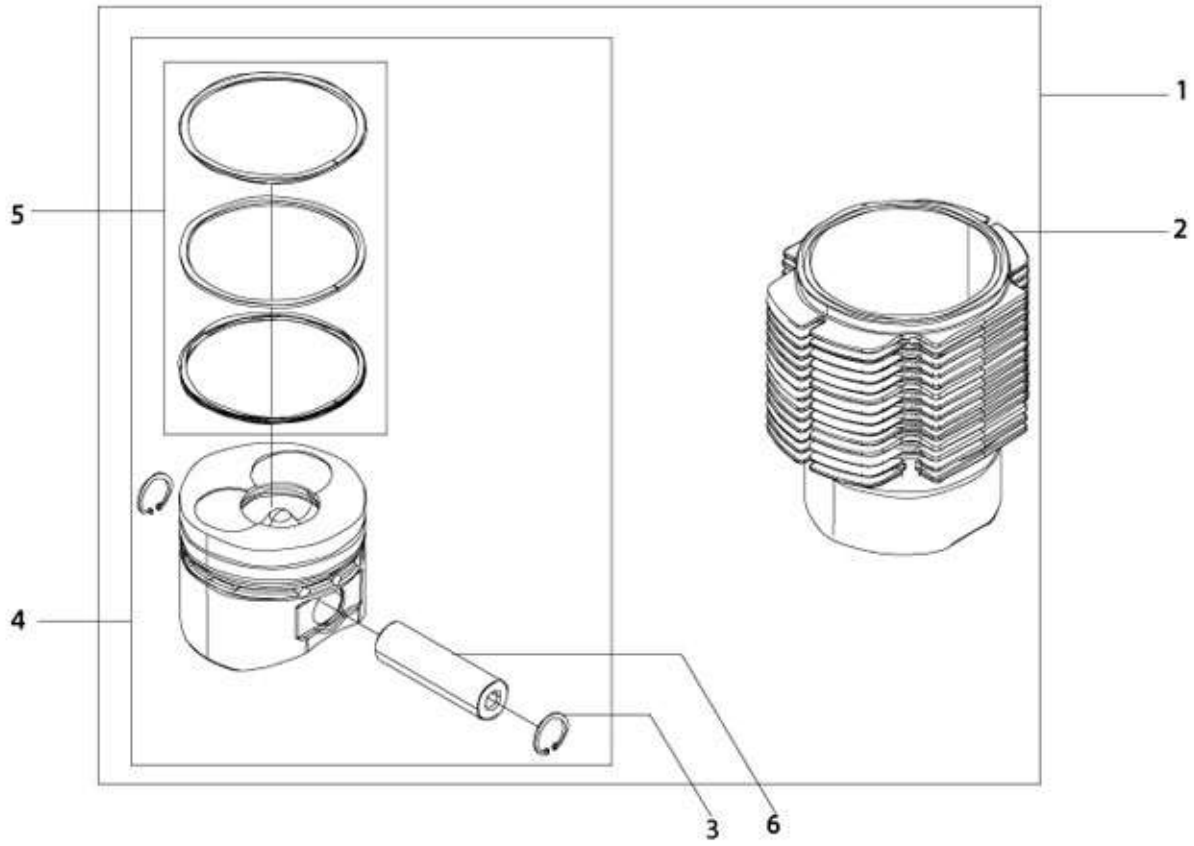
1
2
3
4
5
6

5

Print Date: 05-Oct-2022

PLATE-3

CYLINDER & PISTON

Fig. No.	Part No.	Description	Qty	Remarks
1	E10A050007	CYLINDER & PISTON ASSY. KIT	1	
2	E10M030002	CYLINDER GRADE A	1	
3	E3124017	CIRCLIP 500 SR	2	
4	E10A050001	PISTON ASSY. GRADE A SUITABLE FOR DIA20 PIN	1	
5	E43511440PA	KIT OF PISTON RING SET STD-BS-III	1	
6	E5408480091A	GUGEON PIN	1	

6

Print Date: 05-Oct-2022

PLATE-4
CRANKSHAFT SUPPORT

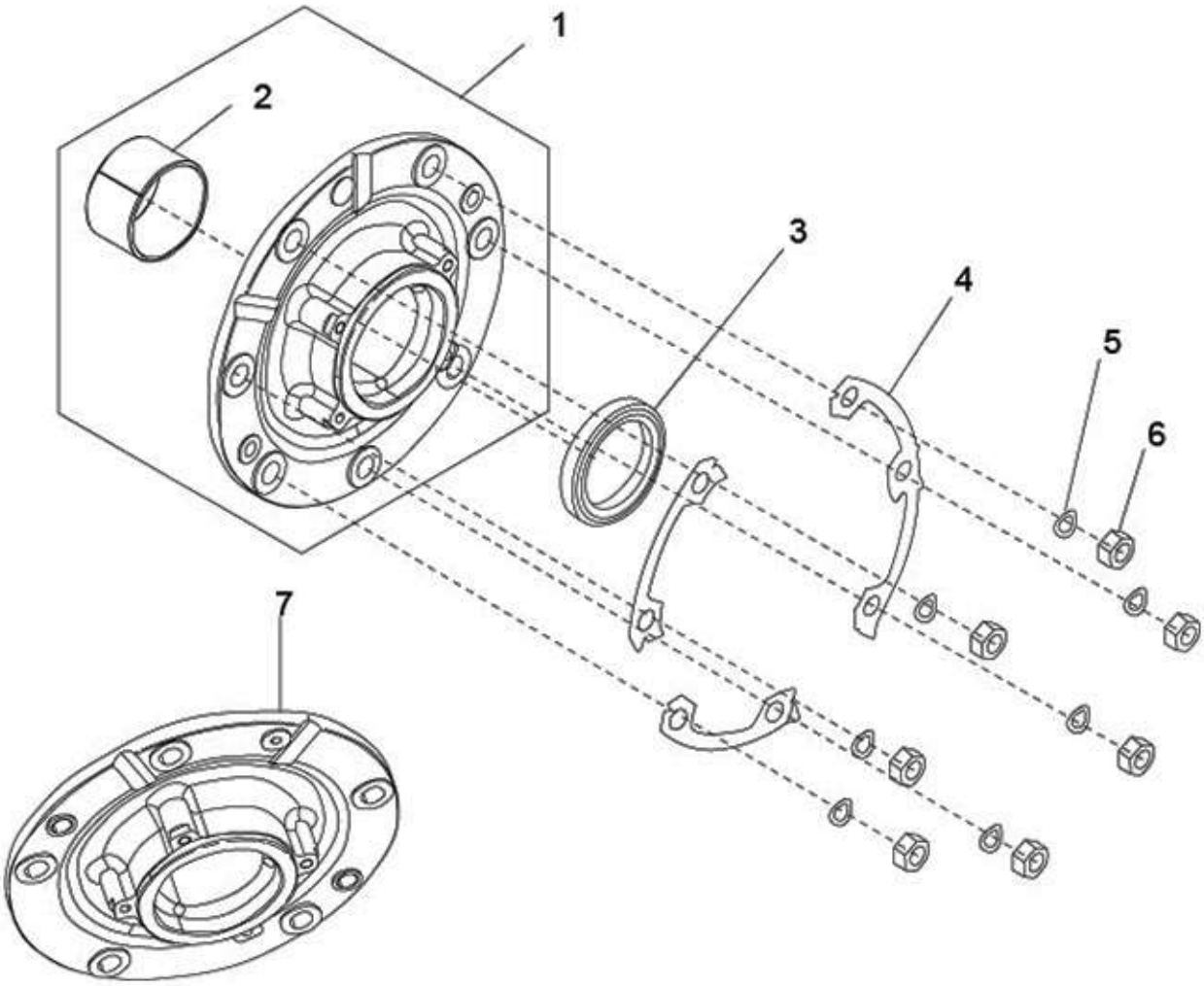
1
2
3
4
5
6
7

7

Print Date: 05-Oct-2022

PLATE-4
CRANKSHAFT SUPPORT

Fig. No.	Part No.	Description	Qty	Remarks
1	E10A110007	CRANKSHAFT SUPPORT ASSY.	1	
2	E53002206	BUSH,FWE STD.	1	
3	ED42548	OILSEAL 520/530/GL400	1	
4	E10G110020	SAFETY RETAINER	4	
5	E250755507	SPRING WASHER FOR M8	7	
6	E9324018	NUT M8 X 1.25 X 6.5	7	
7	940048	LIQUID SEALANT	1	

8

Print Date: 05-Oct-2022

PLATE-5
PTO COVER

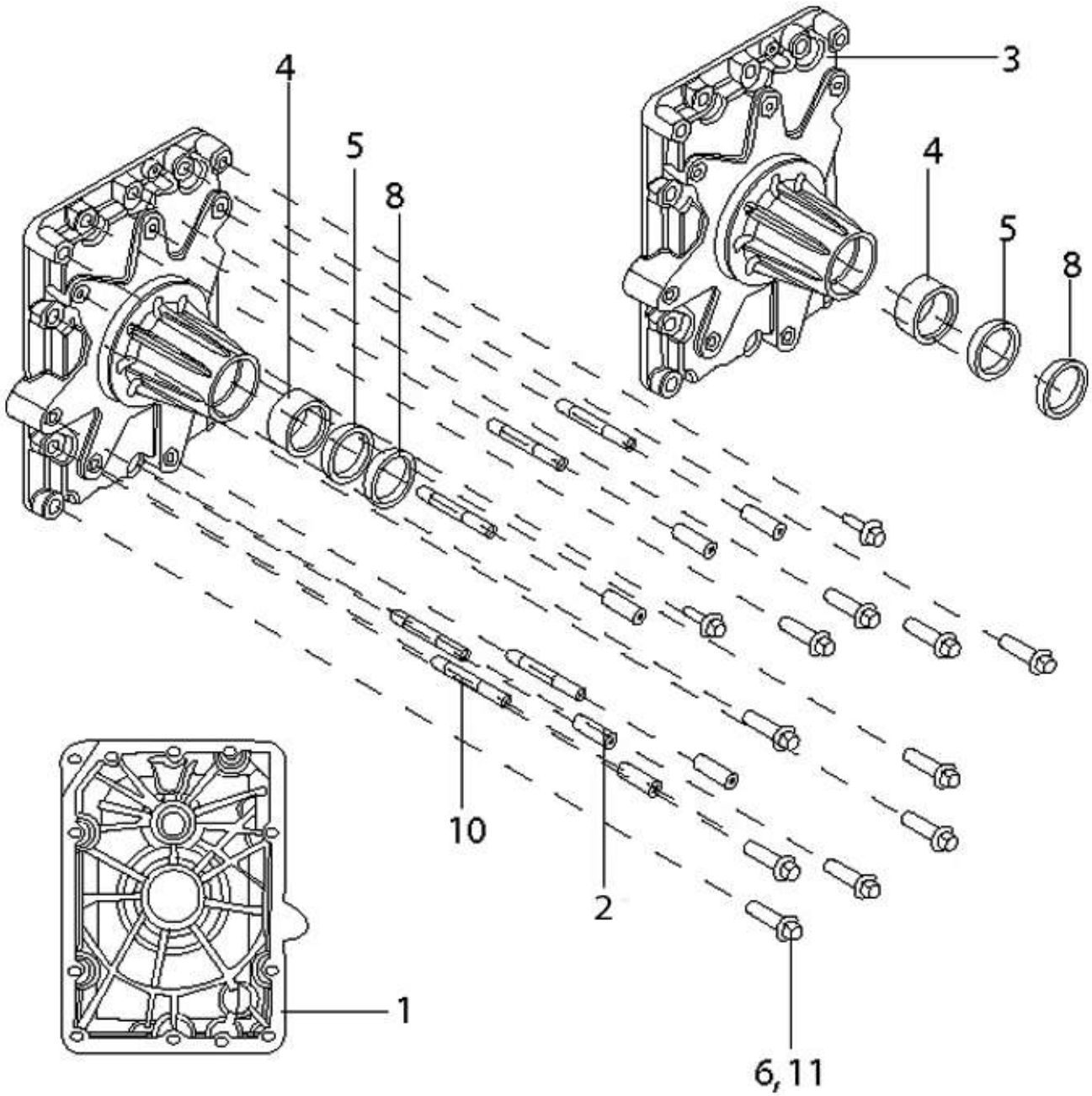
4
5
8
3
4
5
8
10
2
1
6,11

9

Print Date: 05-Oct-2022

PLATE-5
PTO COVER

Fig. No.	Part No.	Description	Qty	Remarks
1	940048	LIQUID SEALANT	1	
2	E50005578	PLUG FOR STUD M8	1	
3	E43521745	COVER PTO (SIX STUD)	1	REAR MTG ,CONSISTING OF 4,5,8
4	E90303028	BEARING NEEDLE	1	
5	E9121356	OIL SEAL	1	
6	E07502804	COLLER BOLT M8 X 1.25 X 30	8	FRONT MTG
7	E422973030	CAP SCREW FOR M8X1.25 FOR FUEL PUMP (BSII)	2	FRONT MTG, NI
8	E50006328	OIL SEAL	1	
9	E50000506	STUD M8X1.25X34	6	FRONT MTG, NI
10	E43500578	STUD-M8	6	
11	E07502804	COLLER BOLT M8 X 1.25 X 30	2	REAR MTG

10

Print Date: 05-Oct-2022

PLATE-6

CYLINDER HEAD & DECOMPRESSION LEVER

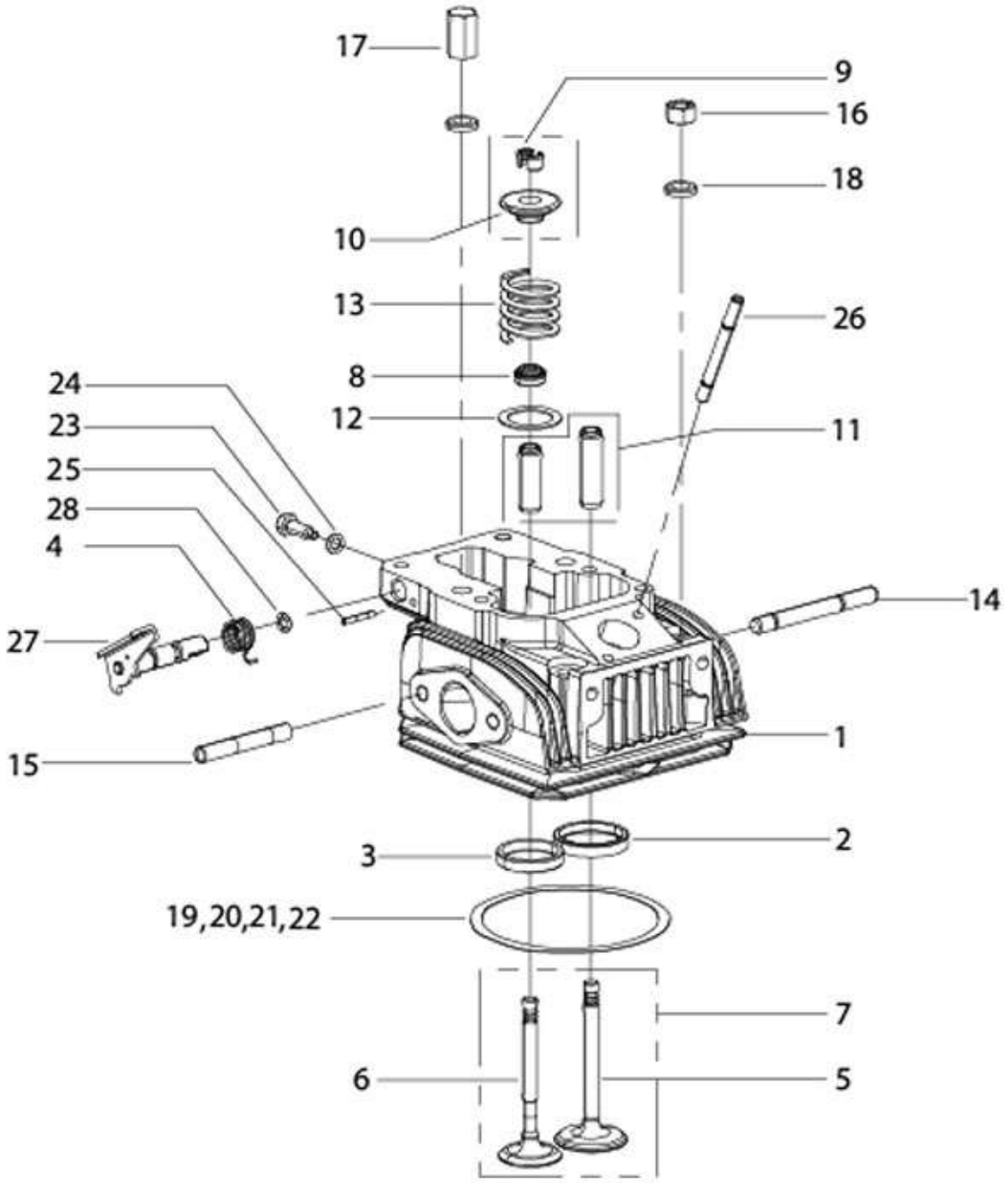
17
9
16
18
10
13
26
8
24
12
11
23
25
28
4
14
27
1
15
3
2
19,20,21,22
7
6
5

11

Print Date: 05-Oct-2022

PLATE-6

CYLINDER HEAD & DECOMPRESSION LEVER

Fig. No.	Part No.	Description	Qty	Remarks
1	E10A020002	CYLINDER HEAD ASSEMBLY WITH VALVES	1	
2	E43518358	VALVE SEAT INLET (SEMI FINISH)	1	
3	E5508000118	VALVE SEAT EXHAUST	1	
4	E5005680046	RETURN SPRING	1	
5	E43522238	SET OF VALVE CONSISTING OF SR. NO. 12 & 13	1	
6	ED33454	EXHAUST VALVE	1	
7	E43522238	SET OF VALVE CONSISTING OF SR. NO. 12 & 13	1	
8	E50006342	VALVE STEM SEAL	2	
9	E870022109	VALVE COLLETS (MULTY GROOVE)	4	
10	E500640030	SPRING RETAINER TOP	2	
11	E18A060006	VALVE GUIDE SET	1	Not servciable
12	E5003430070	DISC	2	
13	E500575545	VALVE SPRING	2	
14	E03B020001	STUD M10X1.5-INTAKE SIDE	2	
15	E10B120002	STUD-M10X1.5 EXHAUST	2	
16	E93240076	NUT	2	
17	ED40165	DOME NUT	2	
18	E97626065	PLAIN WASHER	4	
19	E40016143	JOINT CYLINDER HEAD 0.5 MM	1	
20	E43536107	JOINT CYL. HEAD (0.2 MM THK.)	1	
21	E43536108	JOINT CYL. HEAD (0.3 MM THK.)	1	
22	E43536109	JOINT CYL. HEAD (0.4 MM THK.)	1	
23	E505193049	BOLT	1	
24	E260467001	JOINT	1	
25	E50000901	SPRING DOWEL	1	
26	E10B120001	INJECTOR STUD	1	
27	ED40580	DECOMPRESSION SHAFT ASSY.	1	
28	E268120034	O RING	1	

12

Print Date: 05-Oct-2022

PLATE-7

OIL FILTER & PRESSURE RELIEF VALVE

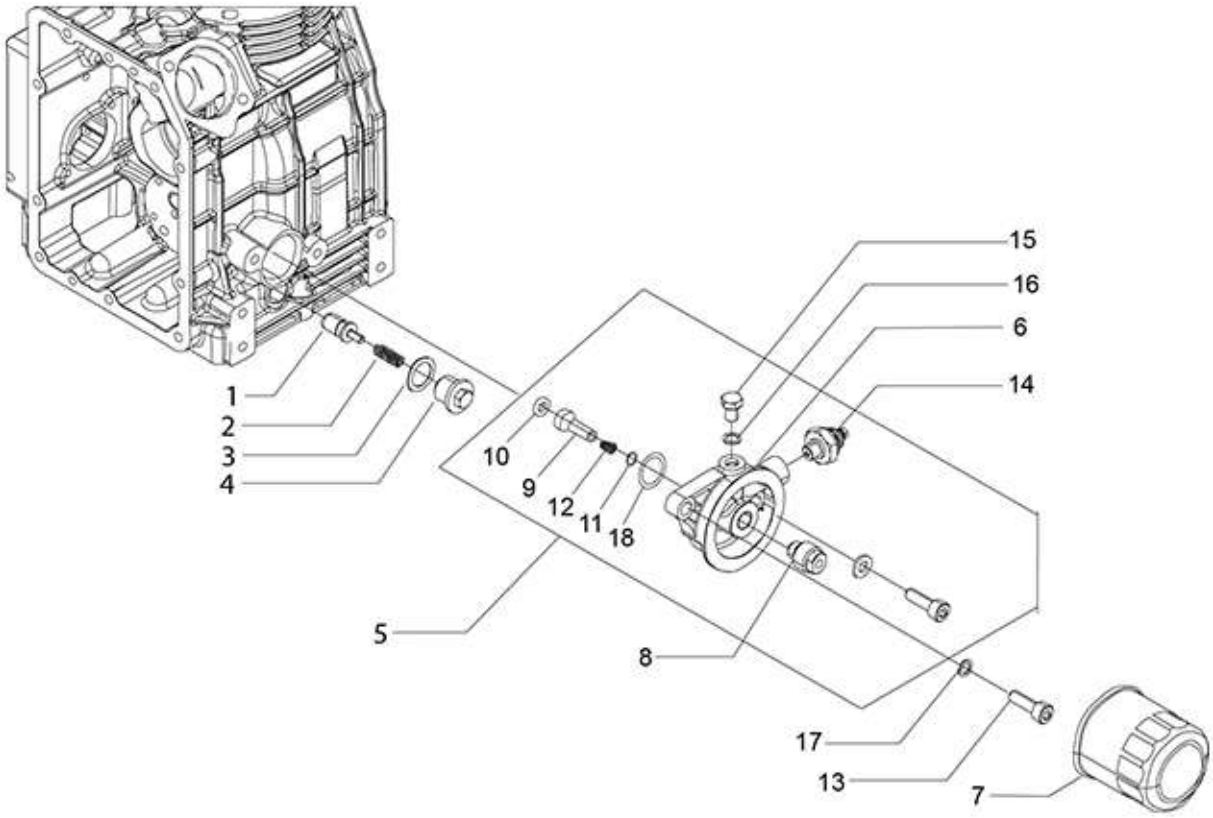
15
16
6
14
1
2
3
4
10
9
12
11
18
5
8
17
13
7

13

Print Date: 05-Oct-2022

PLATE-7

OIL FILTER & PRESSURE RELIEF VALVE

Fig. No.	Part No.	Description	Qty	Remarks
1	E5609680013	RELIEF VALVE BODY	1	
2	E500575549	SPRING	1	
3	E200467021	JOINT	1	
4	E50000475	PLUG RELIEF VALVE	1	
5	E40001816	FLANGE ASSY. L O FILTER	1	CONSISTING OF 6,8 TO 12, 14,15,16 & 18
6	ED21235	FLANGE	1	
7	ED42244	SPIN ON LUB OIL FILTER	1	
8	ED41208	STUD	1	
9	E50006495029	PISTON	1	
10	E50001213143	O RING LUB OIL FILTER	1	
11	E50005625006	SPRING	1	
12	E904120213	O RING	1	
13	E260973027	CAP SCREW M8X 1.25	2	
14	ED41447	OIL PRESSURE SWITCH - PARALLEL THREAD	1	
15	E1177001	BOLT	1	
16	E200467003	JOINT	2	
17	E50000613	MACHINED WASHER 16X8.1X2	2	
18	E260120016	O RING	1	

14

Print Date: 05-Oct-2022

PLATE-8
OIL PAN

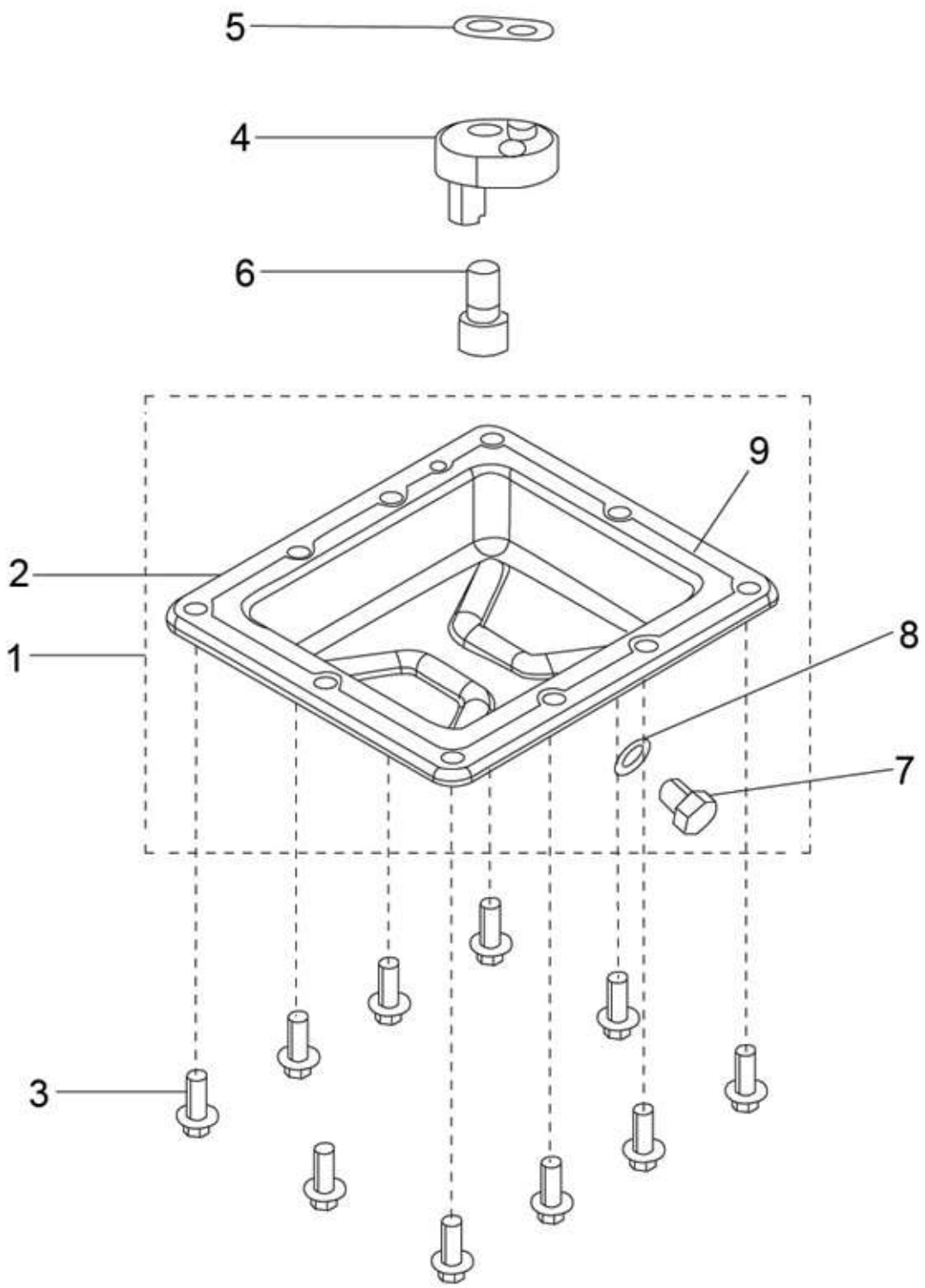
5
4
6
9
2
1
8
7
3

15

Print Date: 05-Oct-2022

PLATE-8
OIL PAN

Fig. No.	Part No.	Description	Qty	Remarks
1	940048	LIQUID SEALANT	1	
2	E50008099	OIL PAN	1	
3	E50002805	COLLER BOLT M8 X 1.25 X 22	10	
4	E50008883	SUCTION BULB ASSY.	1	
5	E40016141	JOINT SUCTION BULB	1	
6	E99732047	SCREW FOR BULB	1	
7	E50000421	MAGNETIC DRAIN PLUG M12X1.5	1	
8	E250467014	JOINT 12X19X1(JOINT DRAIN PLUG)	1	

16

Print Date: 05-Oct-2022

PLATE-9

ROCKER ARM COVER

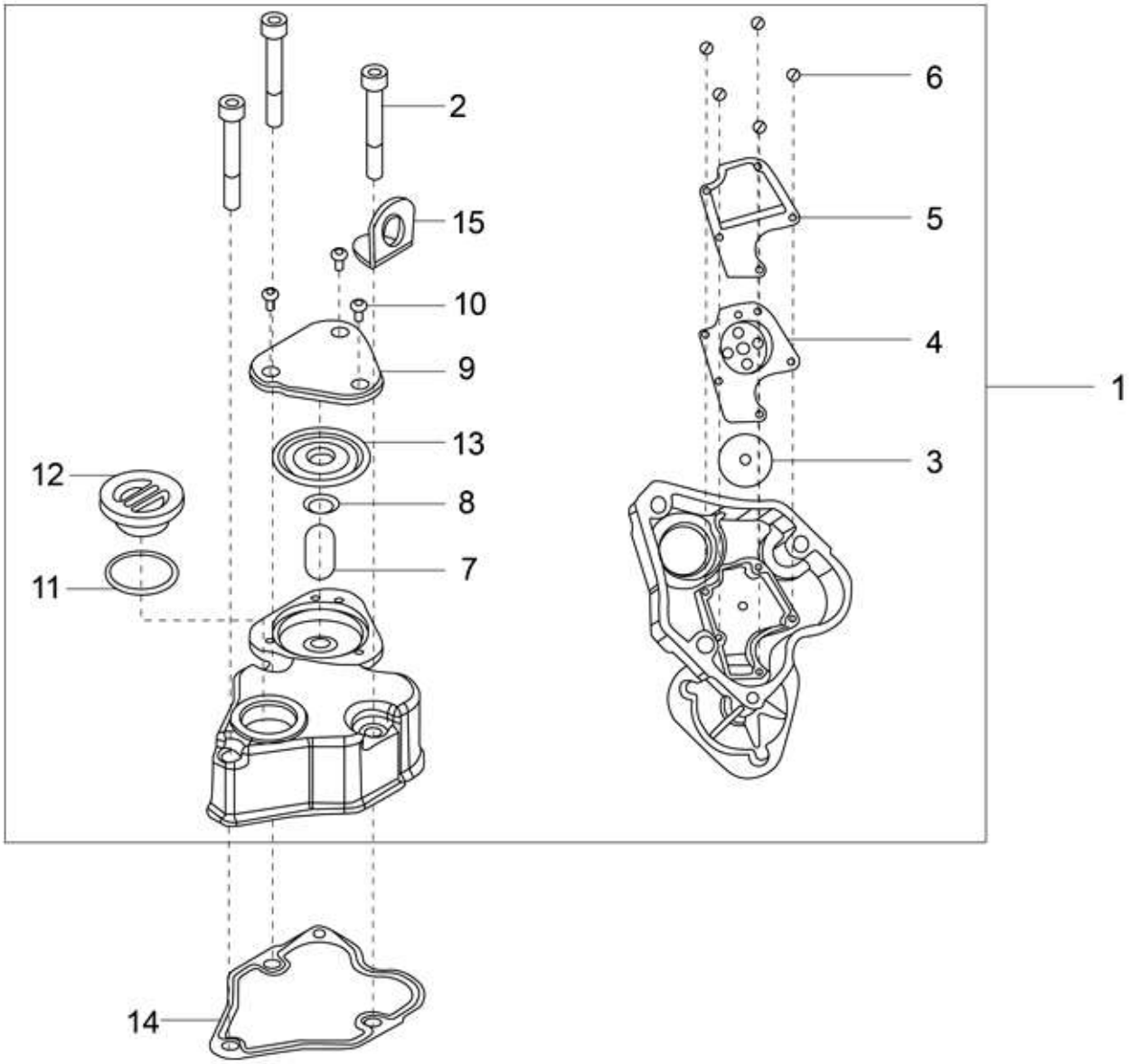
2
15
10
9
13
12
8
7
11
14
6
5
4
1
3

17

Print Date: 05-Oct-2022

PLATE-9

ROCKER ARM COVER

Fig. No.	Part No.	Description	Qty	Remarks
1	E10A110001	ROCKER BOX COVER ASSY. WITH OIL FILLING PLUG	1	CONSISTING OF SR. NO. 2 TO 13.
2	E50000114	BOLT (ALLEN)	2	
3	E1969695019	DIAPPHRAM	1	
4	E1967980064	CUP FOR FILTER	1	
5	E1965140021	SHEET STEEL	1	
6	E51981002	SCREW	5	QTY 2 FOR GOV LEVER
7	E1965755128	SPRING LM TYPE	1	
8	E1967625270	WASHER FOR SAFETY VALVE	1	
9	E10M110002	BREATHER COVER -	1	
10	ESK8694	PHILLIPS HEAD SCREW	3	
11	E91200082	O RING	1	
12	E43524009	OIL FILLING PLUG WITH O RING BSIV	1	
13	ED43751	SAFETY VALVE	1	
14	E10S110001	JOINT FOR ROCKER COVER	1	
15	E904850603	LIFTING HOOK	1	

18

Print Date: 05-Oct-2022

PLATE-10

LUB OIL PUMP & SPEED GOVERNOR

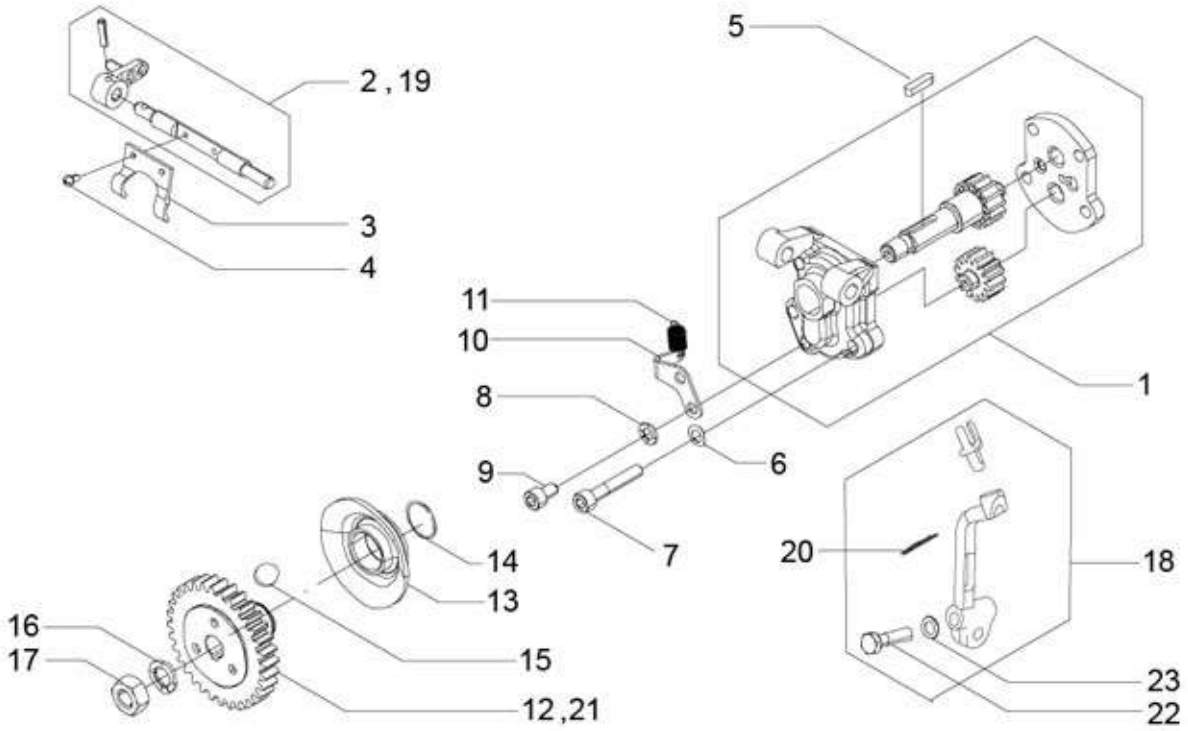
5
2 , 19
3
4
11
10
8
9
6
7
1
14
13
20
18
16
17
15
12 ,21
23
22

19

Print Date: 05-Oct-2022

PLATE-10

LUB OIL PUMP & SPEED GOVERNOR

Fig. No.	Part No.	Description	Qty	Remarks
1	E52006709	LUB OIL PUMP ASSY.	1	
2	ED43350	GOVERNOR LEVER ASSY.(ALTERNATIVE)	1	
3	E500520134	GOVERNOR LEVER (INLET)	1	
4	E51981002	SCREW	2	
5	E500220013	KEY	1	
6	E250755504	SPRING WASHER FOR M6	3	
7	E50000437	HEX SOCKET HEAD SCREW	4	
8	E1756504	SPRING WASHER M6- OIL SEPARATOR 2	2	
9	E264973008	CAP SCREW	1	
10	E5006371045	ANCHOR PLATE	1	
11	E5205801462	SPRING EXCESS FUEL	1	
12	E50010157	GOVERNOR GEAR	1	
13	E500208572	GOVERNOR BELL (STEEL)	1	
14	E500116011	CIRCLIP	1	
15	E3824509	BALL	6	
16	E202756511	SPRING WASHER FOR M10	1	
17	E500324066	NUT	1	
18	E400051135	FUEL PUMP R C LEVER ASSY (BSII)	1	
19	ED43350	GOVERNOR LEVER ASSY.(ALTERNATIVE)	1	ALTERNATIVE TO SR. NO.2
20	E7102800049	SPLIT PIN	1	
21	E50010157	GOVERNOR GEAR	1	ALTERNATIVE TO SR. NO.12
22	E276176034	BOLT M6X1X25	1	
23	E250755504	SPRING WASHER FOR M6	1	

20

Print Date: 05-Oct-2022

PLATE-11

REMOTE THROTTLE & STOP CONTROL

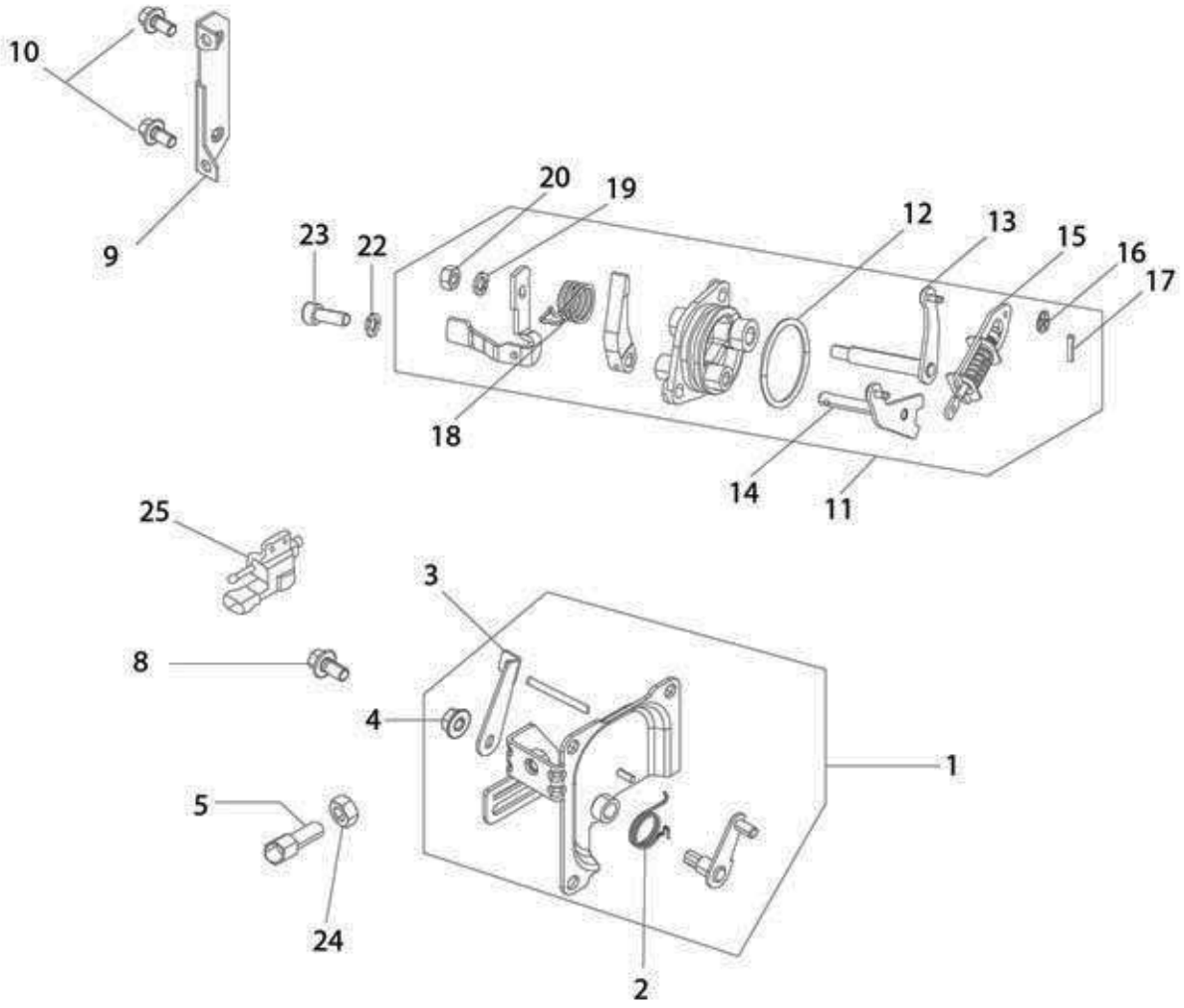
10
9
20
19
23
22
12
13
15
16
17
18
14
11
25
3
8
4
1
5
24
2

21

Print Date: 05-Oct-2022

PLATE-11

REMOTE THROTTLE & STOP CONTROL

Fig. No.	Part No.	Description	Qty	Remarks
1	E10A110006	REMOTE THROTTLE AND STOP CONTROL FOR REAR MTG ENGINE (2 TO 6)	1	
2	E500568044	SPRING STOP LEVER RETURN	1	
3	E500520214	EXTERNAL STOP LEVER	1	
4	E07502811	COLLAR NUT M6 X 1	1	
5	E50000452	TERMINAL	2	
6	E07500428	MAX SPEED SETTING SCREW	2	
7	E105324008	NUT HEX -OIL SEPARATOR MOUNTING	2	
8	E07502813	COLLOR BOLT M6 X 12	2	
9	ED41174	BRACKET REMOTE STOP	1	
10	E07502813	COLLOR BOLT M6 X 12	2	
11	E10A120005	ASSY-GOVERNOR SUPPORT (20 TO 32) WITH CIRCLIP	1	
12	E52006205	O RING	1	
13	E5205200777	UPPER LEVER WITH PIN	1	
14	E40015173	GOVERNOR SUPPORT ASSY. (CONSISTING OF SR.NO. 4;6;11;22 TO 30)	1	
15	E40009645	GOVERNOR SPRING ASSEMBLY	1	
16	E27762505	MACHINED WASHER	2	
17	E9280003	SPLIT PIN	2	
18	E500568043	SPRING	1	
19	E1756504	SPRING WASHER M6- OIL SEPARATOR 2	1	
20	E105324008	NUT HEX -OIL SEPARATOR MOUNTING	1	
21	E50020140	BOLT ASSLY (PUMPSET) (EXCESS FUEL)	1	
22	E1756504	SPRING WASHER M6- OIL SEPARATOR 2	2	
23	E270973010	CAP SCREW (TUBE OIL ADAPTER)	2	
24	E105324008	NUT HEX -OIL SEPARATOR MOUNTING	2	
25	E10G130001	THROTTLE POSITION SENSOR (CW-TYPE)	1	

22

Print Date: 05-Oct-2022

PLATE-12

AIR SHROUD/ FLYWHEEL/ PULLEY/ ELECTRICAL START SYSTEM COMPONENTS

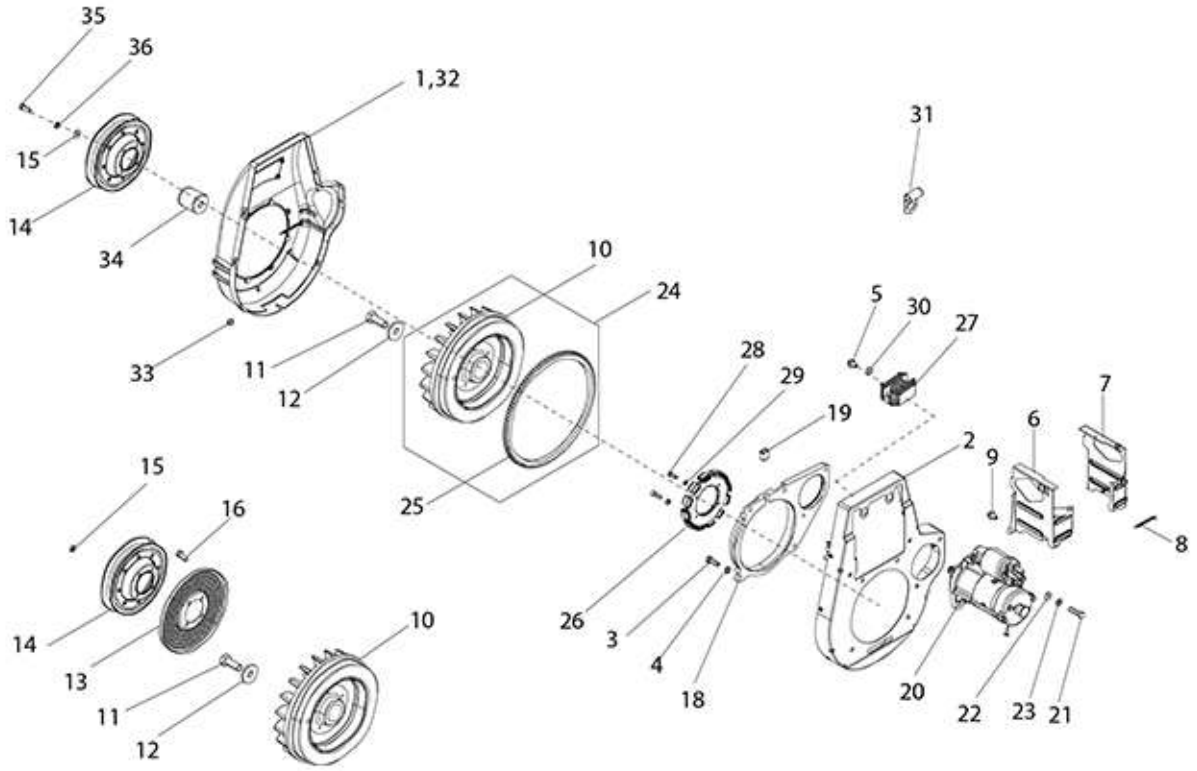
35
36
1,32
31
15
14
34
10
24
5
30
27
33
11
12
28
29
19
7
6
2
9
15
16
25
8
26
3
4
18
14
13
11
12
10
20
22
23
21

23

Print Date: 05-Oct-2022

PLATE-12

AIR SHROUD/ FLYWHEEL/ PULLEY/ ELECTRICAL START SYSTEM COMPONENTS

Fig. No.	Part No.	Description	Qty	Remarks
1	E43531743	AIR SHROUD (BLUE)	1	BLUE
2	E10G110026	BACK PLATE (PCA ENGINE)	1	PCA Engine
3	E9177006	BOLT M8X1.25X25	4	
4	E1756507	SPRING WASHER M8	4	
5	ESK4584	BOLT M8X1.25X40	2	
6	E03G100003	BAFFLE PLATE INTAKE	1	
7	E03G100001	BAFFLE PLATE EXHAUST	1	
8	E5405725043	SPRING AIR BAFFLE	1	
9	E90979037	PHILIPS SCREW	3	
10	E10M030001	FLYWHEEL INTEGRAL	1	
11	E52200434	SCREW HEX. HEAD M14X1.5X35 LH THREAD FLYWHEEL FIXING	1	
12	E97626043	PLAIN WASHER FLYWHEEL	1	
13	ED32131	GUARD PLATE	1	FRONT MTG
15	E260756505	SPRING WASHER (FOR SHEET METAL PULLEY)	4	
16	E50000164	BOLT	4	
17	E500405518	STARTING ROPE	1	
19	E40005592	BUSH FOR FMA CABLE	1	
20	E10G140001	STARTER MOTOR CF60	1	
21	E47177007	SCREW M8X1.25X30	2	
22	E1756507	SPRING WASHER M8	2	
23	E45762512	PLAIN WASHER	2	
24	E10A030001	FLYWHEEL ASSLY WITH RING GEAR (11 & 26)	1	
25	E40009648	RING GEAR STARTER 0.7 KW (INEL FMA)	1	
26	E10G030001	STATOR	1	
27	E10G130018	EGR CONTROLLER-CARGO/PASS./APE CITY	1	
28	E40020135	BOLTS FOR FMA STARTOR	4	
29	E26756503	SPRING WASHER	4	
30	E1756507	SPRING WASHER M8	2	
31	E6193361721	CLAMP	2	
32	E43531743	AIR SHROUD (BLUE)	1	BLACK
33	E90979039	SCREW	6	
34	ED42246	SPACER FR PULLEY	1	
35	E40000565	STUD FOR PULLEY	4	
36	E1324010	NUT	4	

24

Print Date: 05-Oct-2022

PLATE-13

CONNECTING ROD/CRANK SHAFT

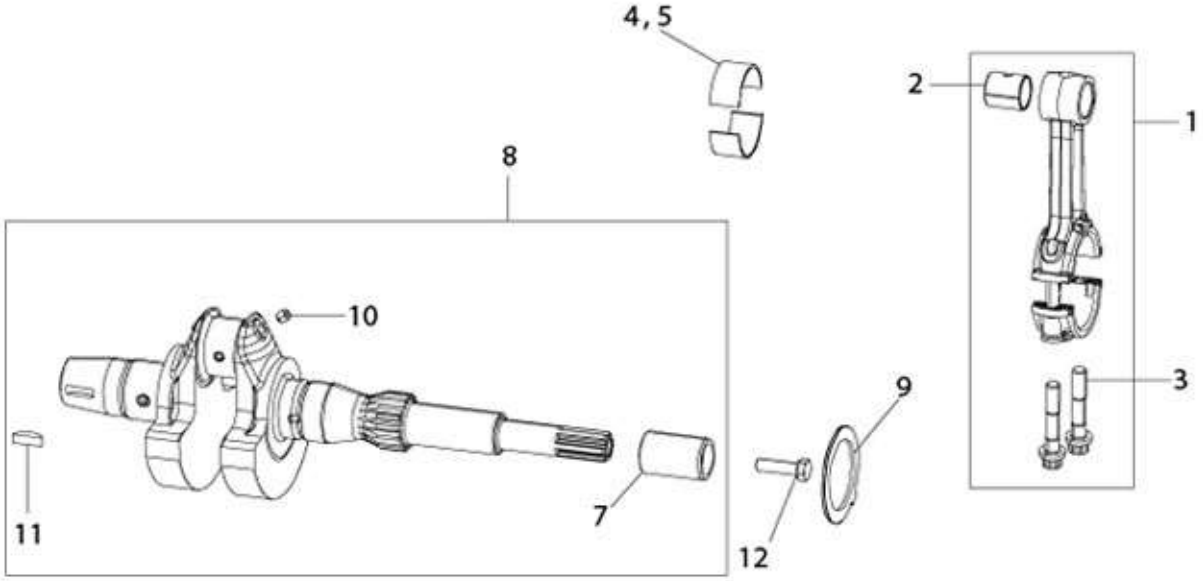
4, 5
2
1
8
10
9
3
11
7
12

25

Print Date: 05-Oct-2022

PLATE-13

CONNECTING ROD/CRANK SHAFT

Fig. No.	Part No.	Description	Qty	Remarks
1	E43509046	CONNECTING ROD ASSY - FRACTURED	1	
2	E50009205	BUSH SMALL END CON ROD	1	
3	E43520166	COLLAR BOLT M8X1 (CON ROD)	2	
4	E50002296A	LARGE END BEARING(SET OF 2)	1	
5	E40022211	LARGE END BEARING WITH COPPER LEAD (SINGLE HALF) 0.25 MM U/S	1	
6	E43510791	FRACTURED CON ROD BOLT KIT	1	NI, CONSIST.OF SR NO 3&4
7	ED40208	SLEEVE DOUBLE OIL SEAL	1	REAR MTG APPLN
8	E43510715	CRANKSHAFT WITH KEY CONSIST OF 8 & 12.	1	BSIII,REAR MTG, CONSIST OF 7 & 11
9	E500125708A	THRUST WASHER	1	
10	E500900038	PLUG OIL HOLE	2	
11	E500228048	KEY - F.W.E.	1	
12	E47177007	SCREW M8X1.25X30	1	REAR MTG

26

Print Date: 05-Oct-2022

PLATE-14

AIR CLEANER / EXHAUST MUFFLER

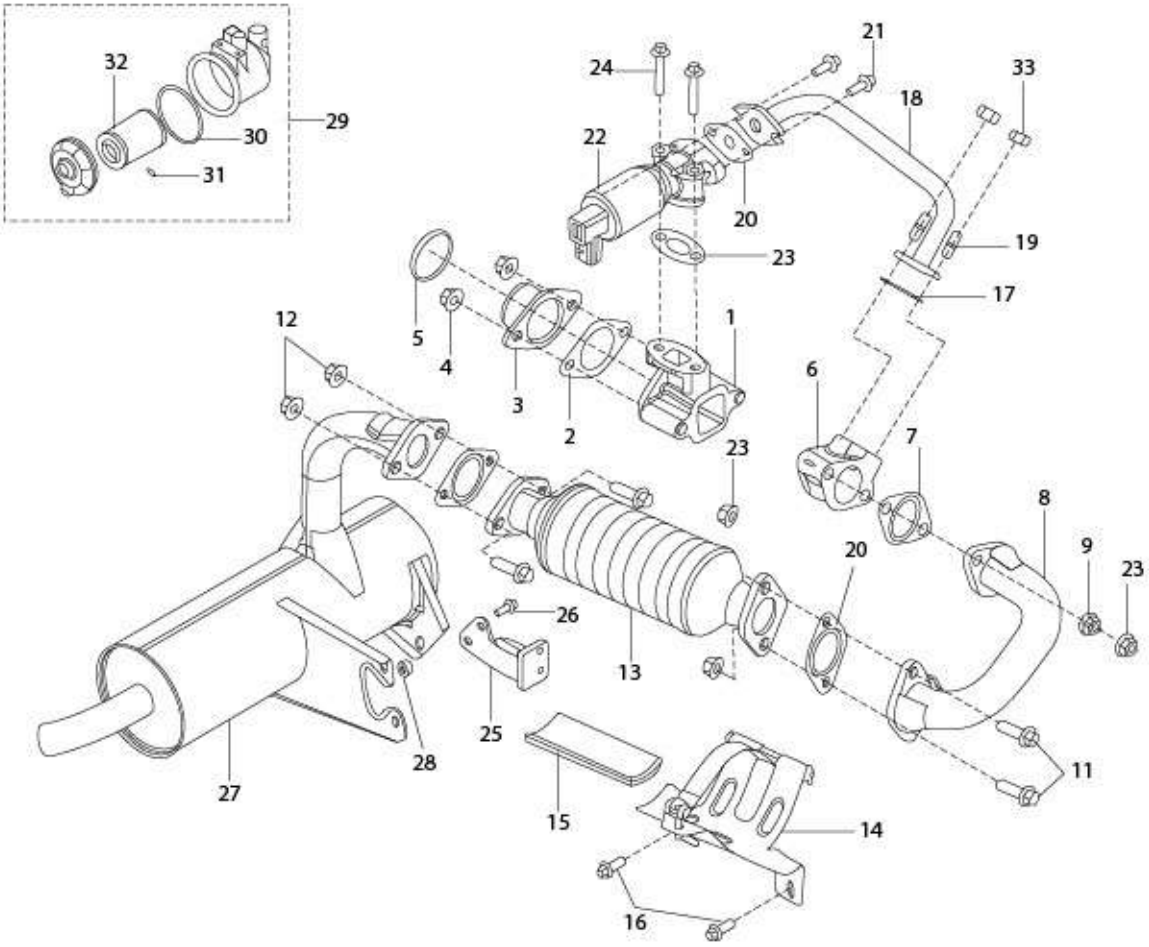
32
29
30
31
24
21
33
18
22
20
19
23
17
12
5
4
1
3
2
6
23
7
8
9
23
20
26
13
25
28
27
15
14
11
16

27

Print Date: 05-Oct-2022

PLATE-14

AIR CLEANER / EXHAUST MUFFLER

Fig. No.	Part No.	Description	Qty	Remarks
1	E10M070001	FLANGE INTAKE MACHINED	1	
2	E10S070002	JOINT-INTAKE FLANGE	2	
3	E10T070001	FLANGE FOR AIR FILTER	1	
4	E07502812	COLLAR NUT M10X1.5	2	
5	E10G110005	PLASTIC CAP FOR AIR FILTER FLANGE	1	
6	E10M070002	FLANGE EXHAUST MACHINED	1	
7	E03S070003	JOINT-EXHAUST FLANGE	2	
8	E10T070002	PIPE-EXHAUST(EXHAUST FLANGE TO OXYCAT)	1	
9	E07502812	COLLAR NUT M10X1.5	2	
10	E87026113	GASKET EXHAUST	2	
11	E43502821	HEX HEAD FLANGE BOLT M10X1.5X30	4	
12	E07502812	COLLAR NUT M10X1.5	4	
13	B076414	OXYCAT METALLIC ASSLY(SUD-CHEME DOC+DOC)	1	
13	E10G070007	OXYCAT- CORNING INDIA(SHARDA MAKE)	1	PCA Engine-Corning India
14	E43527721	OXYCAT BKT & THERMAL INSULATION ASSLY.	1	For Vicat
14	E10G140041	BRACKET FOR OXICAT-ELLIPTICAL SHAPE COM.	1	PCA Engine-Corning India
14	E10G070016	CATCON BRACKET FOR CORNING	1	PCA Engine-Corning India
15	E43526171	THERMAL INSULATION 120X50X8	1	
16	E50002805	COLLER BOLT M8 X 1.25 X 22	2	
17	E43526150	GASKET(EXHAUST MANIFOLD-EGR PIPE)	1	
18	E10T070007	PIPE-EGR	1	
18	E10T070010	EGR PIPE-FOR ALL BSIV MODEL (PCA ENGINE	1	PCA Engine
19	E40000549	STUD AIR INTAKE	2	
20	E43526149	GASKET INTAKE FLANGE	1	
21	E50002805	COLLER BOLT M8 X 1.25 X 22	2	
22	E10G070001	EGR SOLENOID VALVE (NORMALLY OFF)	1	
23	E10S070003	GASKET(EGR VALVE-EGR PIPE)	1	
24	E07502803	COLLAR BOLT ROCKER COVER M8 LIFTING HOOK SIDE	2	
25	E10M70014	BRACKET-MUFFLER (ENGINE SIDE)	1	
26	E50002805	COLLER BOLT M8 X 1.25 X 22	2	
27	E10A070008	ASSEMBLY MUFFLER-APE CITY BSIV	1	REAR MTG
28	E07502810	COLLAR NUT M8 X 1.25	2	LOOSE PART
29	E43518676	AIR FILTER ASSY. (SOGEFI) (PCA ENGINE)	1	PCA Engine
30	920105	SPONGE GASKET O RING)	1	
31	920087	DUST VALUE	1	

28

Print Date: 05-Oct-2022

PLATE-14

AIR CLEANER / EXHAUST MUFFLER

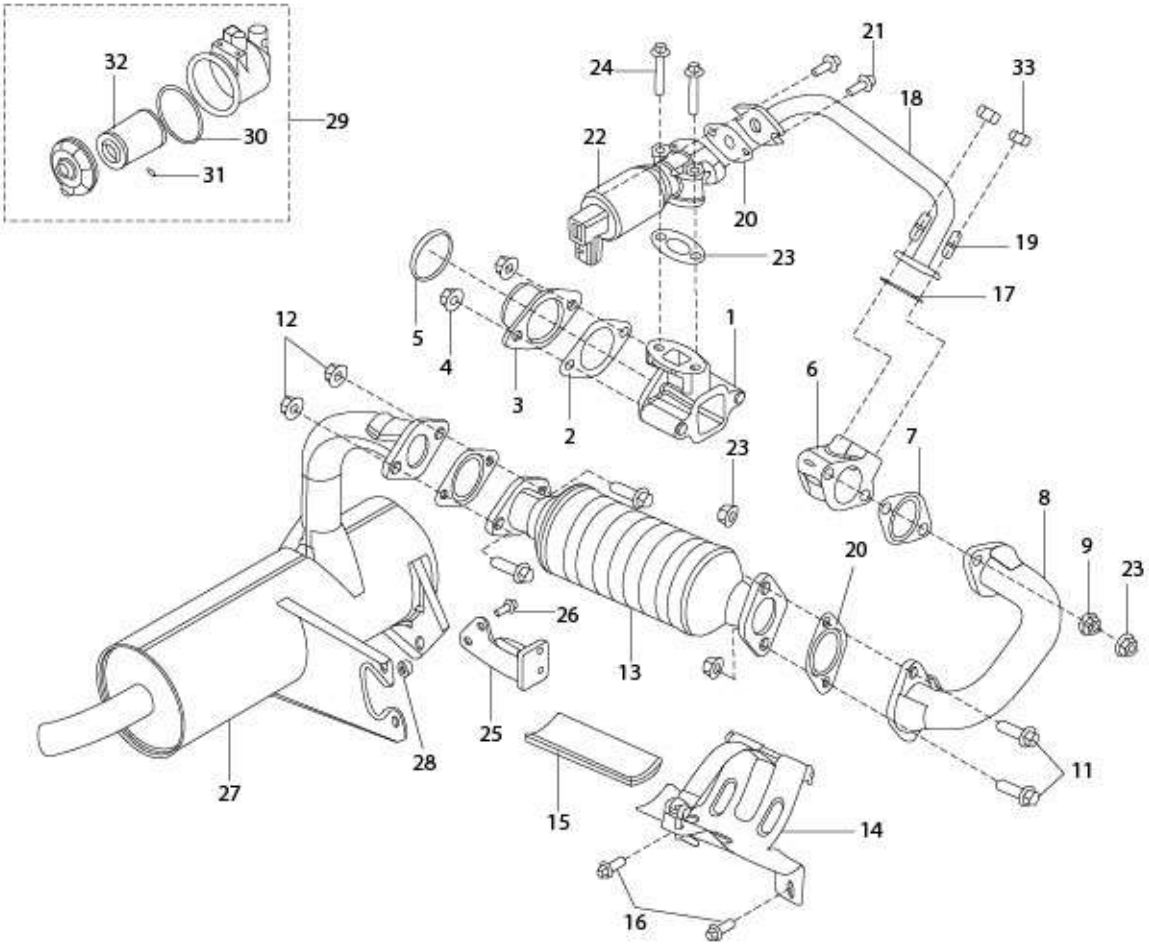
32
30
29
31
24
21
33
18
22
20
19
23
17
12
5
4
3
2
1
6
7
23
8
9
23
20
26
13
25
28
27
15
14
11
16

29

Print Date: 05-Oct-2022

PLATE-14

AIR CLEANER / EXHAUST MUFFLER

Fig. No.	Part No.	Description	Qty	Remarks
32	940094	ELEMENT FOR AIR FILTER	1	
33	E075028010	NUT	2	
34	E10M140001	SLEEVE_ SOGEFI	1	SOGEFI AIR FILTER CHILD PARTS
35	E10P140001	COVER_ SOGEFI	1	SOGEFI AIR FILTER CHILD PARTS
36	E10P140002	GASKET_ SOGEFI	1	SOGEFI AIR FILTER CHILD PARTS
37	E10B140001	BOLT M6X22_ SOGEFI	1	SOGEFI AIR FILTER CHILD PARTS
38	E10B140002	NUT M6_ SOGEFI	1	SOGEFI AIR FILTER CHILD PARTS
39	E10B140003	CLIP_ SOGEFI	3	SOGEFI AIR FILTER CHILD PARTS

30

Print Date: 05-Oct-2022

PLATE-15
INJECTOR

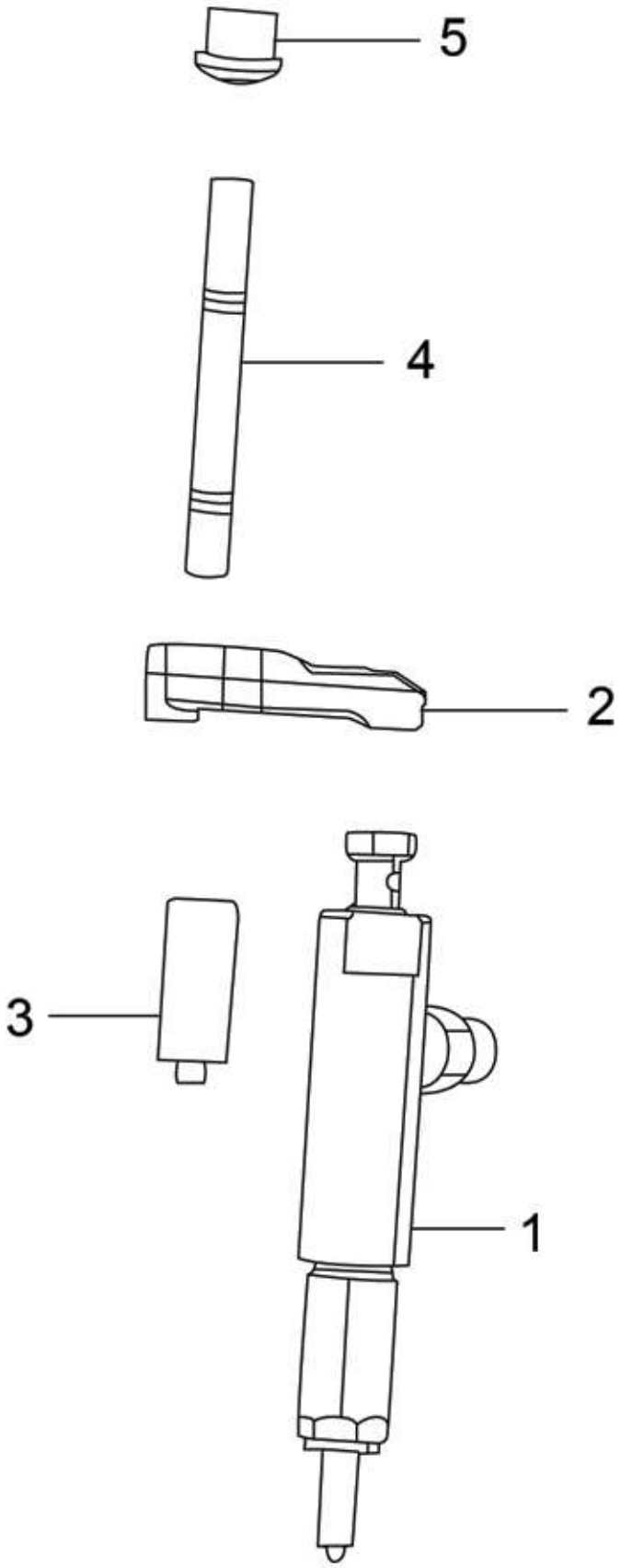
5
4
2
3
1

31

Print Date: 05-Oct-2022

PLATE-15
INJECTOR

Fig. No.	Part No.	Description	Qty	Remarks
1	E10G120004	INJECTOR ASSY WITH JOINT	1	
2	E10M120004	FLANGE INJECTOR	1	
3	E10M120003	DOWEL PIN	1	
4	E10B120001	INJECTOR STUD	1	
5	E60000227	HEX. NUT FOR INJECTOR CLAMP M8X1.25	1	

32

Print Date: 05-Oct-2022

PLATE-16
FUEL PUMP

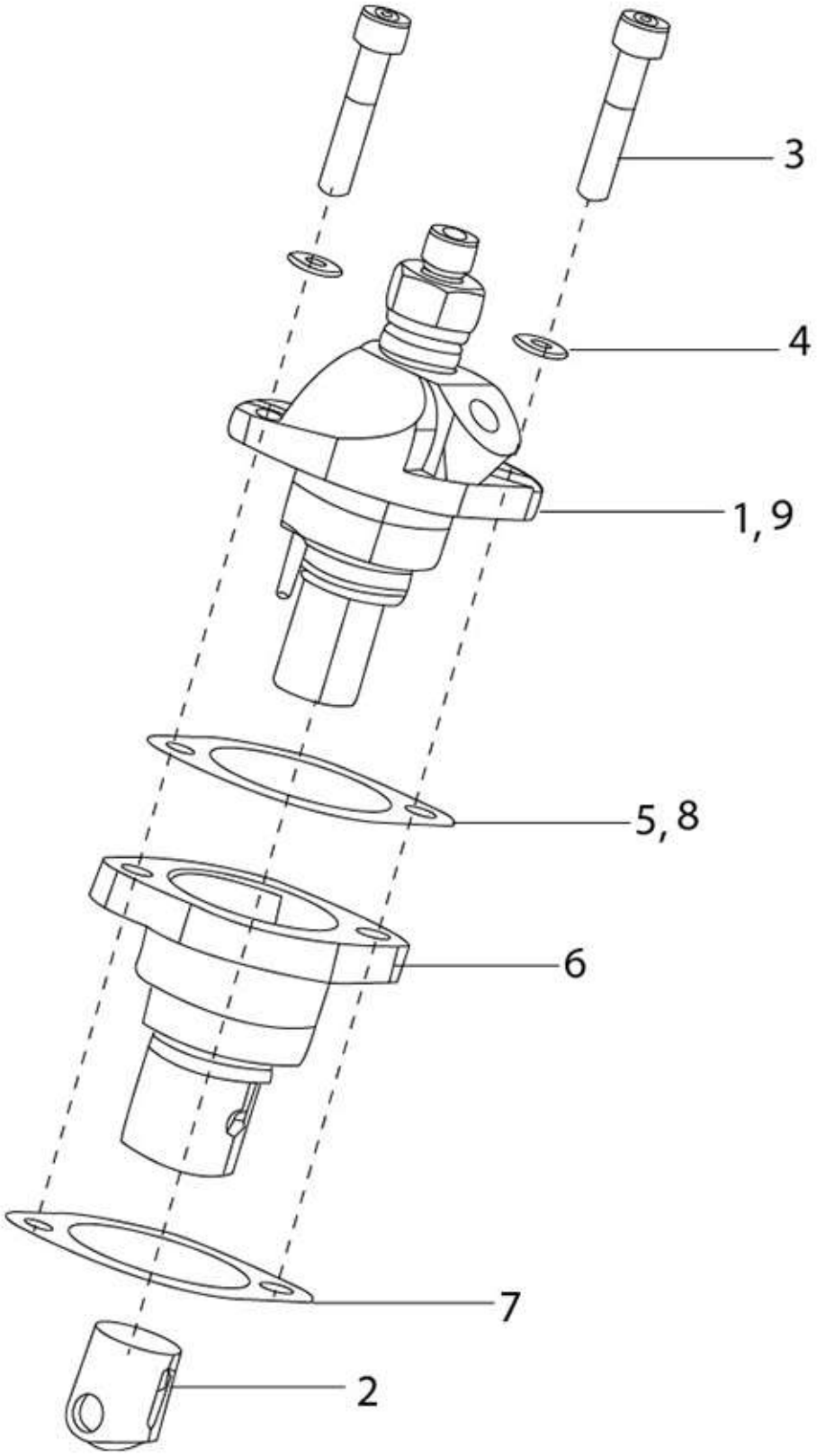
3
4
1, 9
5, 8
6
7
2

33

Print Date: 05-Oct-2022

PLATE-16
FUEL PUMP

Fig. No.	Part No.	Description	Qty	Remarks
1	E10G120070	FIP (PCA ENGINE)	1	PCA Engine
2	E10G120003	ROLLER TAPPET	1	
3	E10M120019	SCREW	2	
4	E1756507	SPRING WASHER M8	2	
5	E500458029	SHIM 0.1MM	1	AS REQUIRED
6	E10M120001	FIP CASING	1	
7	ED42723	JOINT FOR FIP CASING (0.5MM THICK)	1	
8	E5004580057	SHIM 0.05MM FOR FUEL PUMP	1	AS REQUIRED

34

Print Date: 05-Oct-2022

PLATE-17

CAM SHAFT, ROD & ROCKER RAM

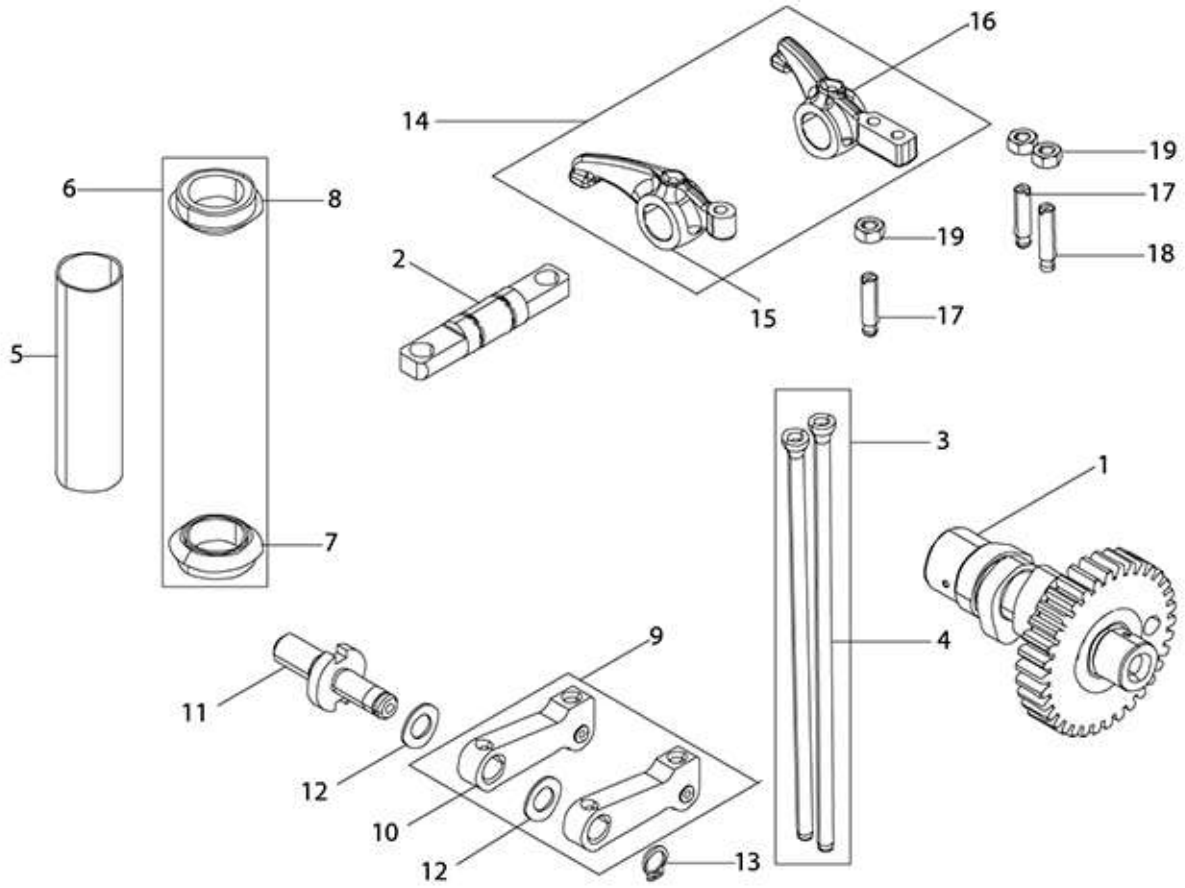
16
14
19
6
8
17
19
18
2
15
17
5
3
1
7
9
4
11
12
10
12
13

35

Print Date: 05-Oct-2022

PLATE-17

CAM SHAFT, ROD & ROCKER RAM

Fig. No.	Part No.	Description	Qty	Remarks
1	E10A060010	CAMSHAFT (PCA ENGINE)	1	PCA Engine
2	E5406045038	ROCKER FULCRUM	1	
3	E43507359	SET OF PUSHRODS	1	CONSISTING OF SR. NO. 4
4	E43507331	PUSH ROD 500 SR.	2	
5	E43507330	PUSH ROD TUBE	1	
6	E43526174	SLEEVE SET CONSISTING OF 4 & 5	1	CONSISTING OF SR. NOS. 7 & 8.
7	E40006428	JOINT PUSH ROD SLEEVE (G400AG)	1	
8	E40006428	JOINT PUSH ROD SLEEVE (G400AG)	1	
9	ED43409	CAM FOLLOWER KIT	1	CONSISTING OF 11
10	E5005271054	CAM FOLLOWER LEVER	2	
11	ED30956	PIN LH THREAD	1	
12	E500755006	DISTANCE PIECE	2	
13	E47124004	CIRCLIP	1	
14	E10A060009	ROCKER LEVER SET	1	CONSISTING OF SR. NO. 15 & 17.
15	E43502707	ROCKER LEVER - INLET	1	Not servciable
16	E10A060001	ROCKER LEVER EXHAUST ASSLY	1	Not servciable ,CONSISTING OF SR. NO.18 & 19.
17	E500985048	ADJUSTING SCREW	2	
18	E505985052	DECOMPRESSOR OPERATING SCREW	1	
19	E105324008	NUT HEX -OIL SEPARATOR MOUNTING	3	

36

Print Date: 05-Oct-2022

PLATE-18

EXTERNAL FUEL FILTER&FUEL PIPES

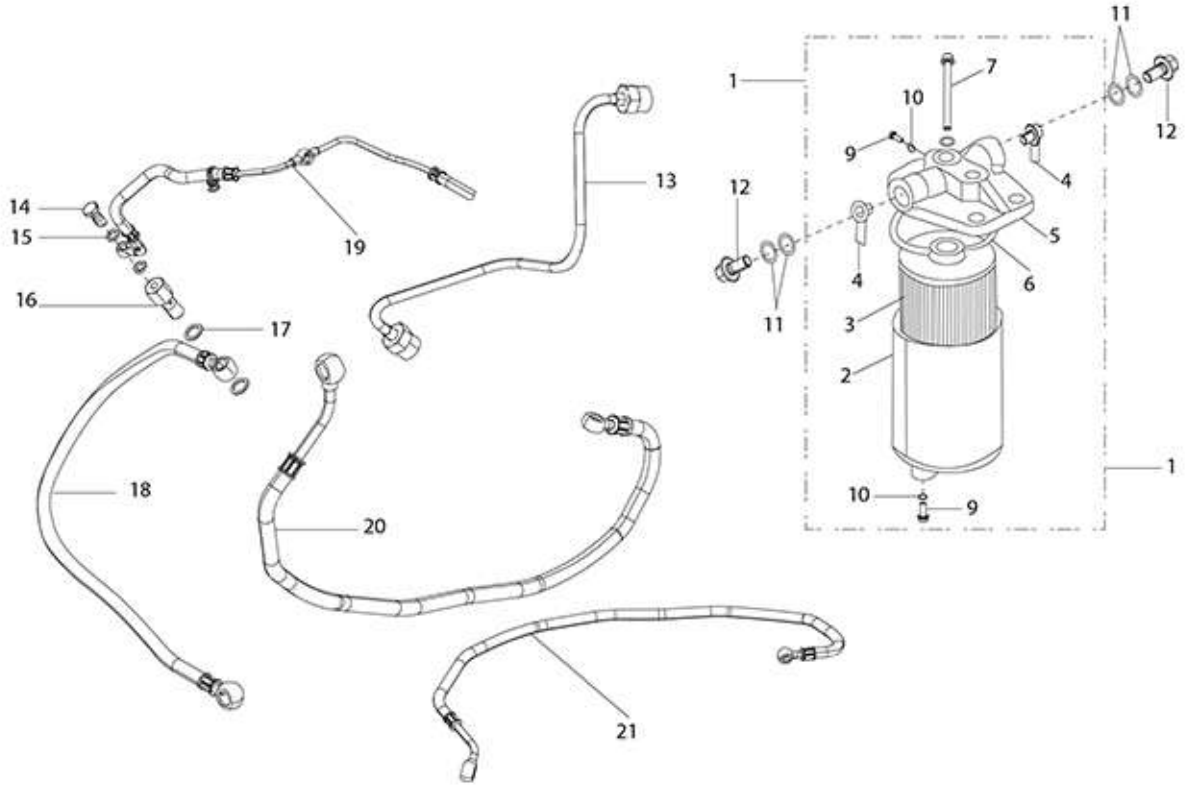
1
2
3
4
5
6
7
9
10
11
12
13
14
15
16
17
18
19
20
21

37

Print Date: 05-Oct-2022

PLATE-18

EXTERNAL FUEL FILTER&FUEL PIPES

Fig. No.	Part No.	Description	Qty	Remarks
1	F002H25009	FUEL FILTER ASSY. (WITH STAR INSERT) (0.5 LIT.) SUPPLIER	1	BOSCH
1	E10G120012	FILTER (WITH STAR INSERT) 0.5 LTR	1	GCL
2	9451035101	FILTER HOUSING	1	
3	9451037405	DIESEL FILTER ELEMENT	1	
4	E2410508007	PROTECTIVE CAP	1	
5	F002H20268	FILTER COVER	1	
6	9451030109	SEALING RING	1	
7	9411033428	HEX SCREW	1	NS
8	2916710603	FLAT SEAL RING	1	
9	F002H21213	HEXAGON SCREW	2	NS
10	2916710602	FLAT SEAL RING	2	
11	E07506189	JOINT 14X20X1.5 THICK	4	
12	E07500819	BANJO BOLT	2	
13	E10T120001	HIGH PRESSURE PIPE ASSLY	1	
14	E200190002	BANJO BOLT	1	PCA Engine
15	E200467003	JOINT	2	PCA Engine
16	E7101901012	BANJO BOLT PUMP INLET	1	
17	E904467015	JOINT	2	REAR MTGAPPLN
18	E43527184	FUEL PIPE (FILTER TO FUEL PUMP)	2	
19	E10T120015	OVERFLOW PIPE (THREE WAY) (PCA ENGINE)	1	PCA Engine
20	E43527185	FUEL PIPE (FEED PUMP TO FILTER)	1	
21	E10T120016	INJECTOR BANJO -OVER FLOW PIPE	1	PCA Engine
22	B075499	FUEL RETURN HOSE-CITY- BS-IV / STEEPED BODY	1	
23	B024170	DIESEL TANK CAP WITH KEY	1	
24	013880	PLAIN WASHER	4	
25	016406	SPRING WASHER	4	
26	31088	HEX HD SCREW M6 X 16 CL 8.8 (811061623)	4	
27	587763	BREATHER PIPE	1	

38

Print Date: 05-Oct-2022

PLATE-19
FEED PUMP

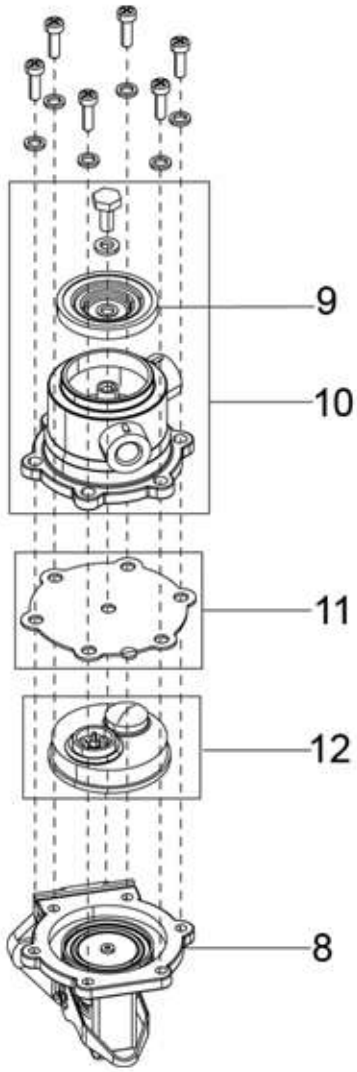
9
10
11
12
8

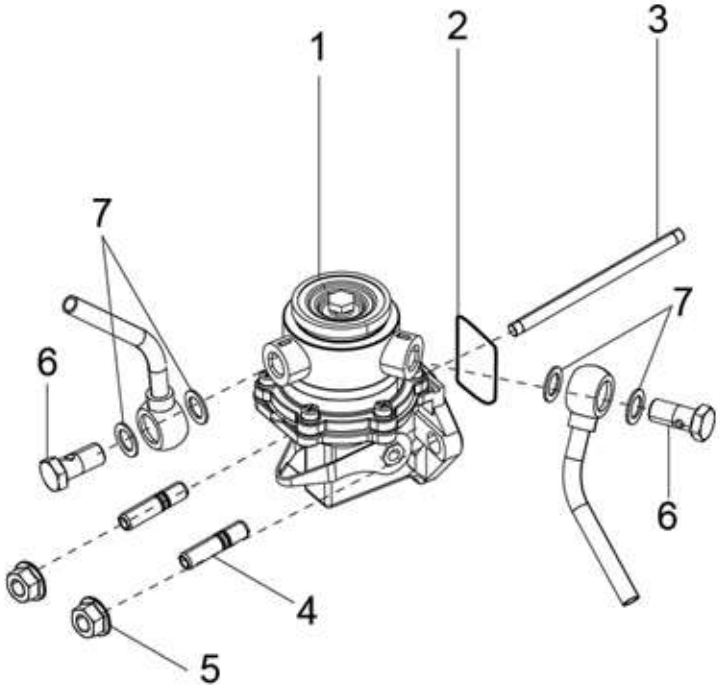
1
2
3
7
7
6
6
4
5

39

Print Date: 05-Oct-2022

PLATE-19
FEED PUMP

Fig. No.	Part No.	Description	Qty	Remarks
1	E10G120009	FEED PUMP	1	AUTO-LEC / SHRIVIK
2	E10G110015	O-RING	1	
3	ED41931	PIN FOR FEED PUMP (BSII)	1	
4	E50000506	STUD M8X1.25X34	2	
5	E07502810	COLLAR NUT M8 X 1.25	2	
6	E60000831	BANJO BOLT M10X1 (PCA ENGINE)	2	PCA Engine
7	E283467036	JOINT	4	
8	E40006819	FEED PUMP (AUTO LEC) NEW	1	
9	-	NOT SERVICEABLE	1	NS,AUTO-LEC/SHRIVIK
10	E40006816	TOP BODY (FOR E40006819)	1	
11	E40006818	DIAPHRAGM (FOR E40006819)	1	
12	E40006819	FEED PUMP (AUTO LEC) NEW	1	

40

Print Date: 05-Oct-2022

PLATE-20

AIR FILTER MOUNTING & ENGINE HOSE

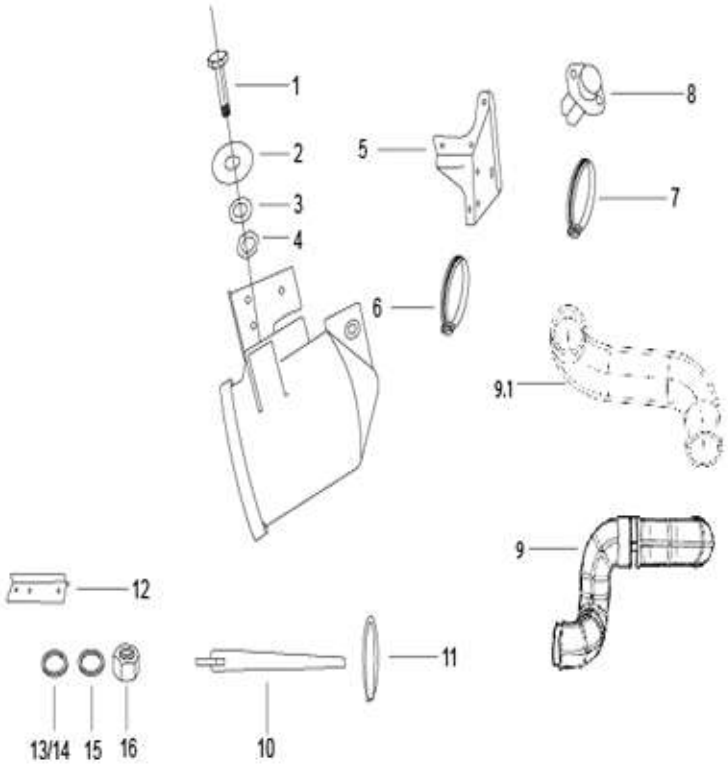
1
2
3
4
5
6
7
8
9.1
9
12
11
13/14
15
16
10

41

Print Date: 05-Oct-2022

PLATE-20

AIR FILTER MOUNTING & ENGINE HOSE

Fig. No.	Part No.	Description	Qty	Remarks
1	031090	HEXAGONAL SCREW	3	
2	604973	PLAIN WASHER M6	3	
3	016406	SPRING WASHER	3	
4	20106	HEX NUT M6	3	
5	6A000096	AIR FILTER BRACKETS ASSY.	1	
6	604553	WORM CLIP	3	
7	604756	HOSE CLIP	1	
8	6A000071	FLANGE-AIR FILTER	1	
9	B078898	HOSE AIR FILTER TO ENGINE- CITY PTL BSIV	1	
9.1	B078897	HOSE-AIR FILTER TO LONG MEMBER	1	
10	B009290	STRAP ASSY.	1	
11	632413	RUBBER PACKING (N.I.)	1	
12	632412	BKT. STRAP HOLDING	1	
13	3056	PLAIN WASHER M6 OD12	2	
14	013880	PLAIN WASHER	2	
15	016406	SPRING WASHER	4	
16	20106	HEX NUT M6	4	

42

Print Date: 05-Oct-2022

PLATE-21

ENGINE SIDE COVER & MAIN HOUSING

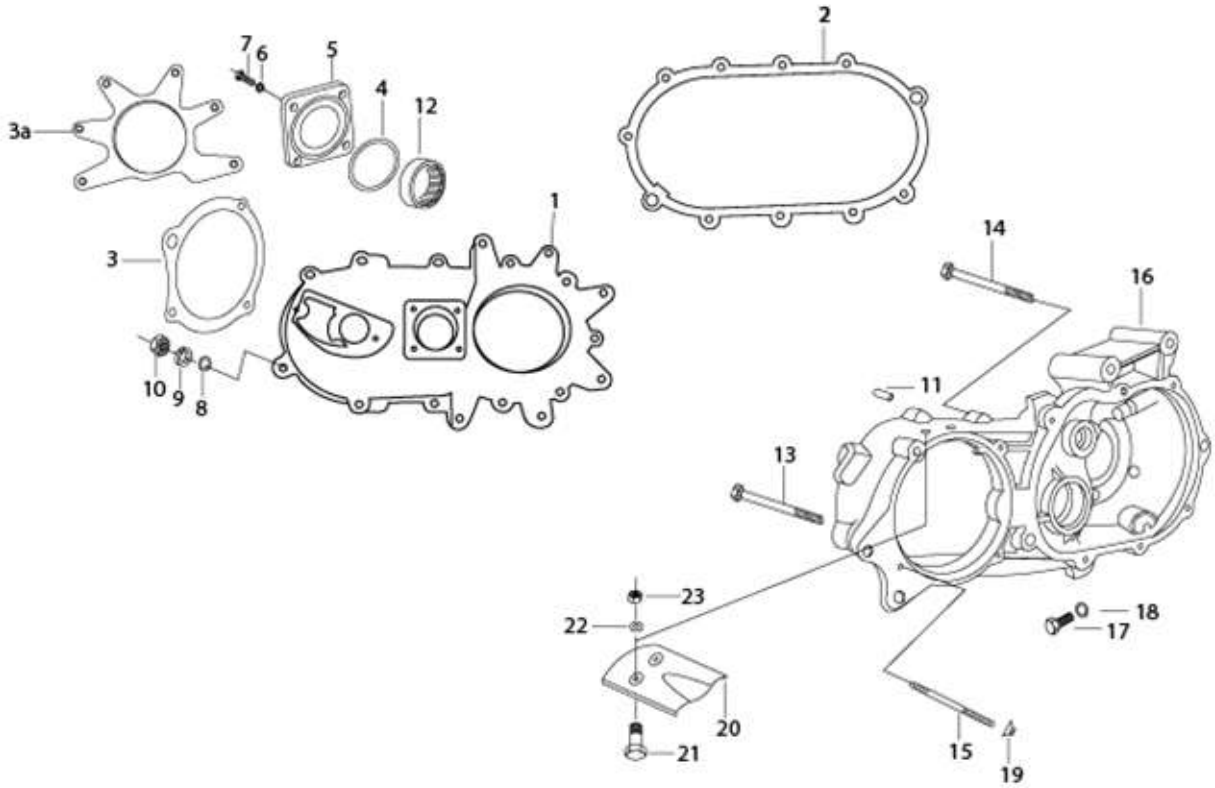
2
7
6
5
4
12
3a
1
3
14
16
11
10
9
8
13
23
22
18
17
20
21
15
19

43

Print Date: 05-Oct-2022

PLATE-21

ENGINE SIDE COVER & MAIN HOUSING

Fig. No.	Part No.	Description	Qty	Remarks
1	1F0007564	ENGINE COVER SIDE (EXT. MTG)	1	
2A	B001844	GASKET ENGINE SIDE COVER	1	
3	129001014	GASKET ENGINE PTO FACE (4 STUD)	1	
3A	B001501	GASKET PTO COVER & ENGINE SIDE COVER	1	
4	825420215	O RING - COVER PLATE	1	
5	520221019R	COVER PLATE (E/SIDE COVER)	1	
6	659842	NUT WITH CONICAL WASHER M8 X 1.25P	4	
7	1A016964	CSK PHILIPS HEAD SCREW	4	
8	808000826	PLAIN WASHER M8	19	
9	016408	SPRING WASHER	19	
10	15335	HEX HD NUT M8	19	
11	127102010	HOLLOW DOWEL (G. BOX ESC)	2	
12	120212012	NEEDLE BUSH	1	
13	B042798	FLANGED HEXAGONAL HEAD SCREW M8X45	2	
14	B042799	FLANGED HEXAGONAL HEAD SCREW M8X40	9	
15	B016611	FLANGED HEX. HEAD SCREW M6X45 CL10	4	
16	1A010094	MAIN HOUSING	1	Old
17	811081025	HEX HEAD SCREW M8 X 10 (DRAIN PLUG)	1	
18	3056	PLAIN WASHER M6 OD12	1	
19	016406	SPRING WASHER	2	
20	127911019	OIL DEFLECTOR CLUTCH	1	
21	567741	HEX HEAD SCREW M5 X 18 (811051824)	2	
22	127912013	FIBER WASHER OIL DEFLECTOR	2	
23	659842	NUT WITH CONICAL WASHER M8 X 1.25P	6	
24	B076830	GB EXT.MTG.(W/O CLUTCH ASSLY) PASS. STD	1	
16	1A016604	MAIN HOUSING	1	New aluminiun clutch

44

Print Date: 05-Oct-2022

PLATE-22

MAINSHAFT SPEEDGEAR AND CLUSTER GEAR

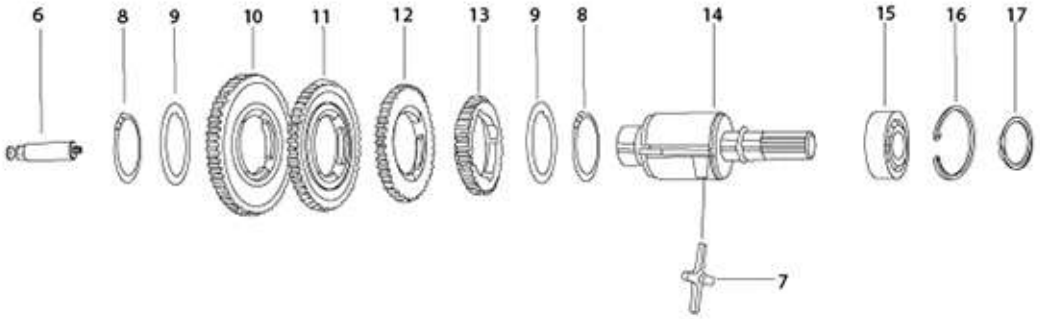
6
8
9
10
11
12
13
9
8
14
15
16
17
7

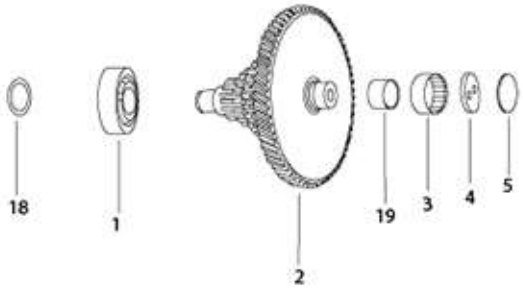
18
1
2
19
3
4
5

45

Print Date: 05-Oct-2022

PLATE-22

MAINSHAFT SPEEDGEAR AND CLUSTER GEAR

Fig. No.	Part No.	Description	Qty	Remarks
1	30209R	BALL BEARING FRONT WHEEL HUB	1	
2	1A010698R	CLUSTER GEAR	1	
3	884222808	NEEDLE BUSH 22X28X12	1	
4	120204015R	WASHER (ALT)	1	
5	120205019	SHIM HARD BUSH	1	
6	523021018	STEM GEAR OPERATING	1	
7	B003924	CROSS	1	
8	842004808	CIRCLIP DIA.48 (EXT)	2	
9	523011013R	SHOULDER RING	2	
9	523011013R	SHOULDER RING	1	
10	1A009578R	SPEED GEAR 1ST	1	
11	1A010700R	SECOND SPEED GEAR (VE}	1	
12	127303016R	SPEED GEAR 3RD	1	
13	127306513R	SPEED GEAR 4TH	1	
14	127451019R	MAIN SHAFT	1	
15	880255211R	DEEP GROOVE BALL BEARING 25X52X15	1	
16	841005207	CIRCLIP DIA 52 (INT)	1	
17	842002501	CIRCLIP DIA 25 (EXT)	1	
18	842001507	CIRCLIP DIA 15 (EXT)	1	

46

Print Date: 05-Oct-2022

PLATE-23

DIFFERENTIAL UNIT, FARE METER HOUSING, SPEEDO DRIVE

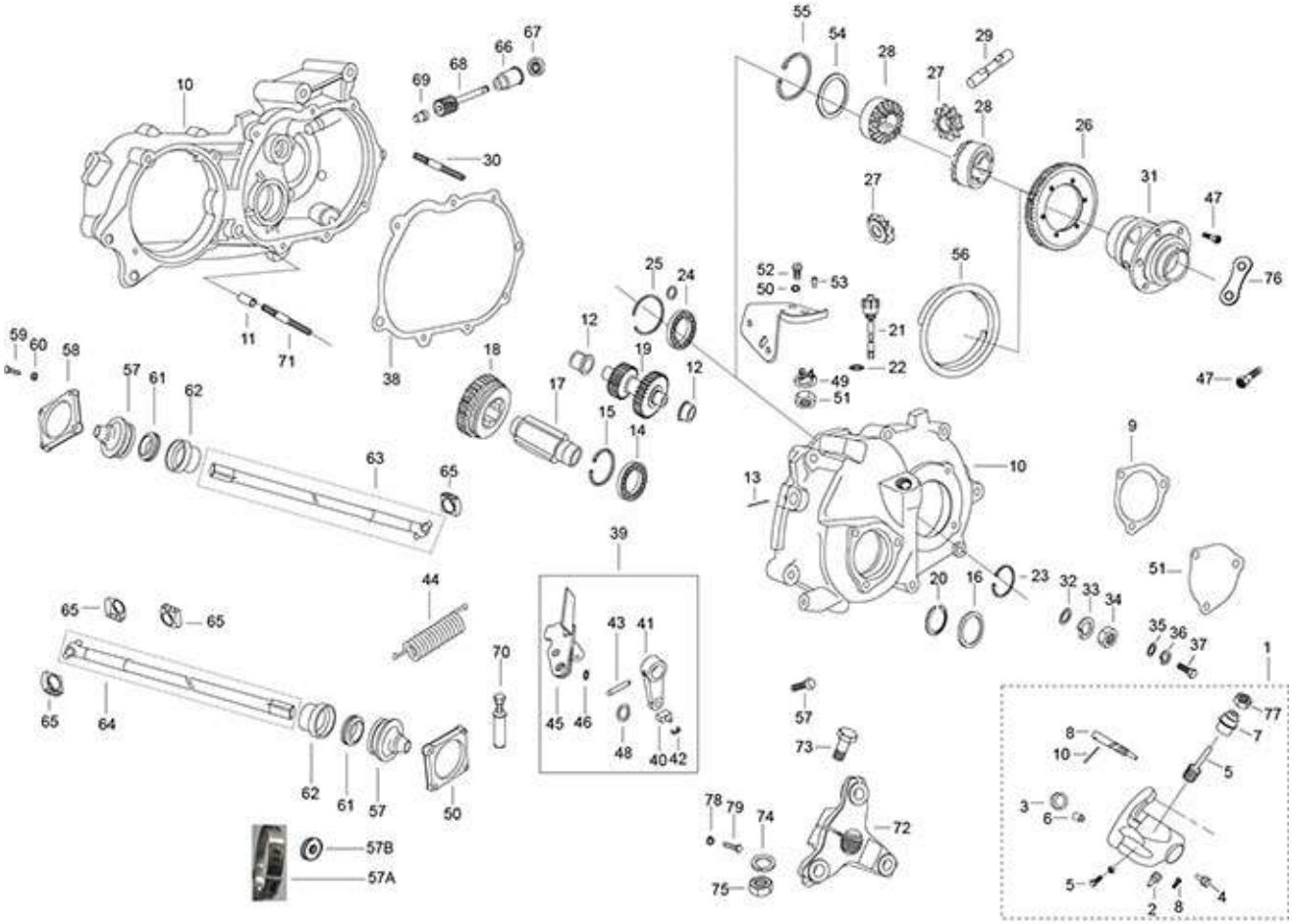
55
54
28
29
27
28
26
31
47
76
10
69
68
66
67
30
27
56
52
53
50
21
22
25
24
12
19
12
49
51
47
11
71
38
18
17
15
14
59
60
58
57
61
62
63
65
13
10
9
39
44
20
16
23
32
33
34
51
35
36
37
1
65
65
43
41
70
45
46
48
40
42
57
73
77
7
8
10
5
65
64
62
61
57
50
3
6
78
79
74
72
57B
57A
75
5
2
8
4

47

Print Date: 05-Oct-2022

PLATE-23

DIFFERENTIAL UNIT, FARE METER HOUSING, SPEEDO DRIVE

Fig. No.	Part No.	Description	Qty	Remarks
1	124140011	FARE METER HOUSING ASSY. COMPLETE (MODIFIED)	1	
2	165121014	PIN	1	
3	B018991	PLUG FOR FAREMETER	1	
4	124121015	FARE METER PINION	1	
5	124102019	FARE METER GEAR	1	
6	822031942	SPRING PIN 3 X 19	1	
7	124141015R	ADOPTER NYLON (VE)	1	
8	124113018	GREASE NIPPLE (M6)	1	
9	1A000826	GASKET	1	
10	BS4 1A010093	GEAR BOX COVER_BS4	1	
11	120203011	HOLLOW DOWEL - GEAR BOX COVER	1	
12	B042486	BUSH	2	
13	822051647	SPRING PIN 5X16	1	
14	880305509R	DEEP GROOVE BALL BEARING 30X55X13	1	
15	841005506	CIRCLIP DIA. 55 (INT)	1	
16	1A000236	OIL SEAL	1	
17	1A009926	REVERSE SHAFT	1	
18	127404016R	GEAR R.C.	1	
19	127571015R	IDLER GEAR (PAS)	1	
20	842003000	CIRCLIP DIA. 30 (EXT.)	1	
21	112898	OIL LEVEL ARM WITH PLUG	1	Old
21	1A014592	OIL DIPSTICK	1	New aluminiun clutch
22	127016015	DIPSTICK SEALING WASHER	1	
23	6450	EXT CIRCLIP DIA 48	1	
24	7066R	RADIAL BALL BEARING	1	
25	111353	CIRCLIP	1	
26	127555016	GEAR FINAL DRIVE (PASS)	1	
26	1A011810	DIFFERENTIAL CROWN (PASS.)	1	Applicable 15th Mar-19 onwards
27	940028	GEAR SUN AND DIFFERENTIAL GEAR	2	
28	940028	GEAR SUN AND DIFFERENTIAL GEAR	2	
29	132129	PIN	1	
30	B042798	FLANGED HEXAGONAL HEAD SCREW M8X45	8	
31	288730	DIFFERENTIAL CAGE	1	
32	808000826	PLAIN WASHER M8	10	
33	016408	SPRING WASHER	10	

48

Print Date: 05-Oct-2022

PLATE-23

DIFFERENTIAL UNIT, FARE METER HOUSING, SPEEDO DRIVE

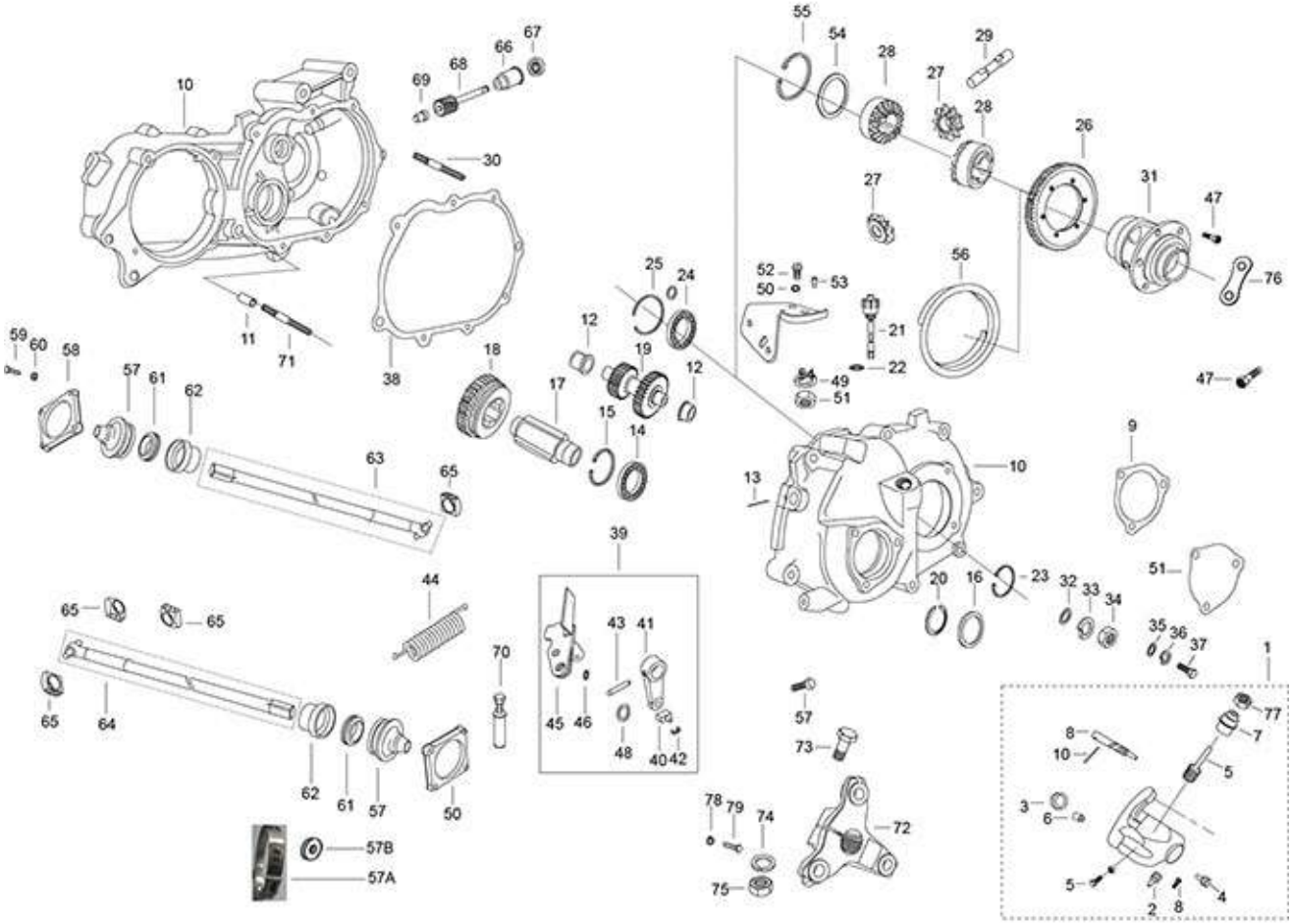
10
69
68
66
67
30
11
71
38
55
54
28
29
27
28
26
31
47
76
27
56
52
53
50
21
22
25
24
12
19
12
18
17
15
14
49
51
47
59
60
58
57
61
62
63
65
13
10
9
39
44
65
65
43
41
70
45
46
48
40
42
20
16
23
32
33
34
51
35
36
37
1
65
64
62
61
57
50
57
73
77
7
8
10
5
3
6
78
79
74
72
75
5
2
8
4
57B
57A

49

Print Date: 05-Oct-2022

PLATE-23

DIFFERENTIAL UNIT, FARE METER HOUSING, SPEEDO DRIVE

Fig. No.	Part No.	Description	Qty	Remarks
34	15335	HEX HD NUT M8	10	
35	3056	PLAIN WASHER M6 OD12	3	
36	016406	SPRING WASHER	3	
37	31088	HEX HD SCREW M6 X 16 CL 8.8 (811061623)	1	
38	127141016	GASKET G. B. COVER	1	
39	SP1A0101404	INVERTER LEVER SECTOR ASSY PASS -SPD	1	
40	120321019	SLIDER BLOCK R.C. GEAR	1	
41	B076455	LEVER S/ASSLY. REVERSE	1	
42	843000500	CIRCLIP DIA.5 (EXT) TYPE C	1	
43	17702	SPRING PIN	1	
44	127111011	REVERSE GEAR SPRING	1	
45	1A010139	SECTOR PLATE ASSLY COMP	1	For Old Gear Box Cover
46	1A005176	O- RING	1	
47	1A004807	SCREW	6	
48	825080209	O - RING - (SECTOR PLATE ASSY.)	1	
49	016406	SPRING WASHER	2	
50	003054	PLAIN WASHER	2	
51	20104	HEX NUT M4	2	
52	31088	HEX HD SCREW M6 X 16 CL 8.8 (811061623)	2	
53	128307019	BOLT R.C. SPRING RETAINING	1	
54	220575	WASHER 65X3	1	
55	132134	CIRCLIP	1	
56	132244	STOPPER THK=1.0	1	
56	1A011778	SATELLITE PIN RETAINER	1	Applicable 15th Mar-19 onwards
56A	1A000612	RETAINER SCREW - PRE COATED	2	Applicable 15th Mar-19 onwards
57	6C000016	BELLOW	2	Chassis cut off MBX0004AFXB796311
57A	6C000041	OTIKAR CLAMP FOR BELLOW	2	Chassis cut off MBX0004AFXB796311
57B	3056	PLAIN WASHER M6 OD12	6	Chassis cut off MBX0004AFXB796311
58	111356	COVER	1	
59	31092	HEX. HD SCREW M6X25	8	
60	016406	SPRING WASHER	8	
61	6C000312R	SEAL RING	2	Chassis cut off MBX0004AFXB796311
61	6C000312R	SEAL RING	2	ECN: 500000256019
62	113278	BRACKET RETAINER RING (41736)	2	
63	587687	PROP. SHAFT SUB ASSY. LT (WITH PIN)	1	

50

Print Date: 05-Oct-2022

PLATE-23

DIFFERENTIAL UNIT, FARE METER HOUSING, SPEEDO DRIVE

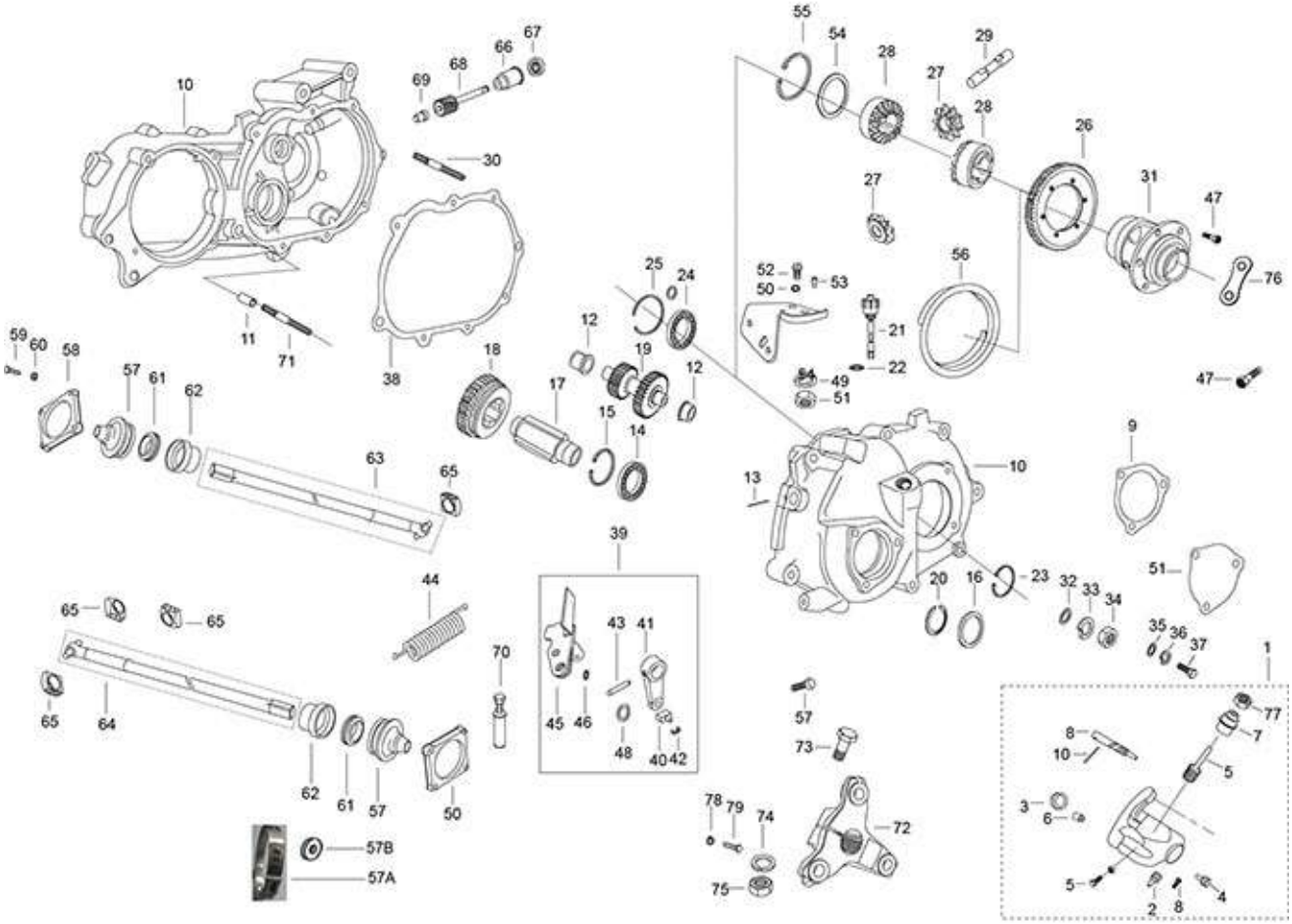
55
54
28
29
27
28
26
31
47
76
10
69
68
66
67
30
27
56
52
53
50
21
22
25
24
12
19
12
11
71
38
18
17
15
14
49
51
47
59
60
58
57
61
62
63
65
13
10
9
39
44
23
20
16
32
33
34
51
35
36
37
1
65
65
43
41
70
45
46
48
40
42
57
73
77
7
8
10
5
64
62
61
57
50
3
6
78
79
74
72
57B
57A
75
5
2
8
4

51

Print Date: 05-Oct-2022

PLATE-23

DIFFERENTIAL UNIT, FARE METER HOUSING, SPEEDO DRIVE

Fig. No.	Part No.	Description	Qty	Remarks
64	587685	PROP. SHAFT SUB ASSY. RT (WITH PIN)	1	
65	112867R	SLIDER BLOCK PROP. SHAFT	4	
66	117401	BUSH	1	
67	117402	OIL SEAL	1	
68	117404	SPEEDOMETER GEAR	1	
69	165121014	PIN	1	
70	604560	SCREW TERMINAL ASSY. - GEAR CONTROL	1	
71	B042799	FLANGED HEXAGONAL HEAD SCREW M8X40	2	
72	111498	ELASTIC HUB	2	
73	B024614	HEX HEAD BOLT M10X45 CL 10.9	2	
74	16410	SPRING WASHER	2	
75	231370	SELF BREAKING NUT M10	2	
76	B003155	LOCK PLATE	3	Discontinue
77	20105	PLAIN NUT M5	1	
78	3056	PLAIN WASHER M6 OD12	3	
79	31089	HEX HEAD SCREW M6X18 CL 8.8	3	

52

Print Date: 05-Oct-2022

PLATE-24
CLUCTH & CLUCTH COVER

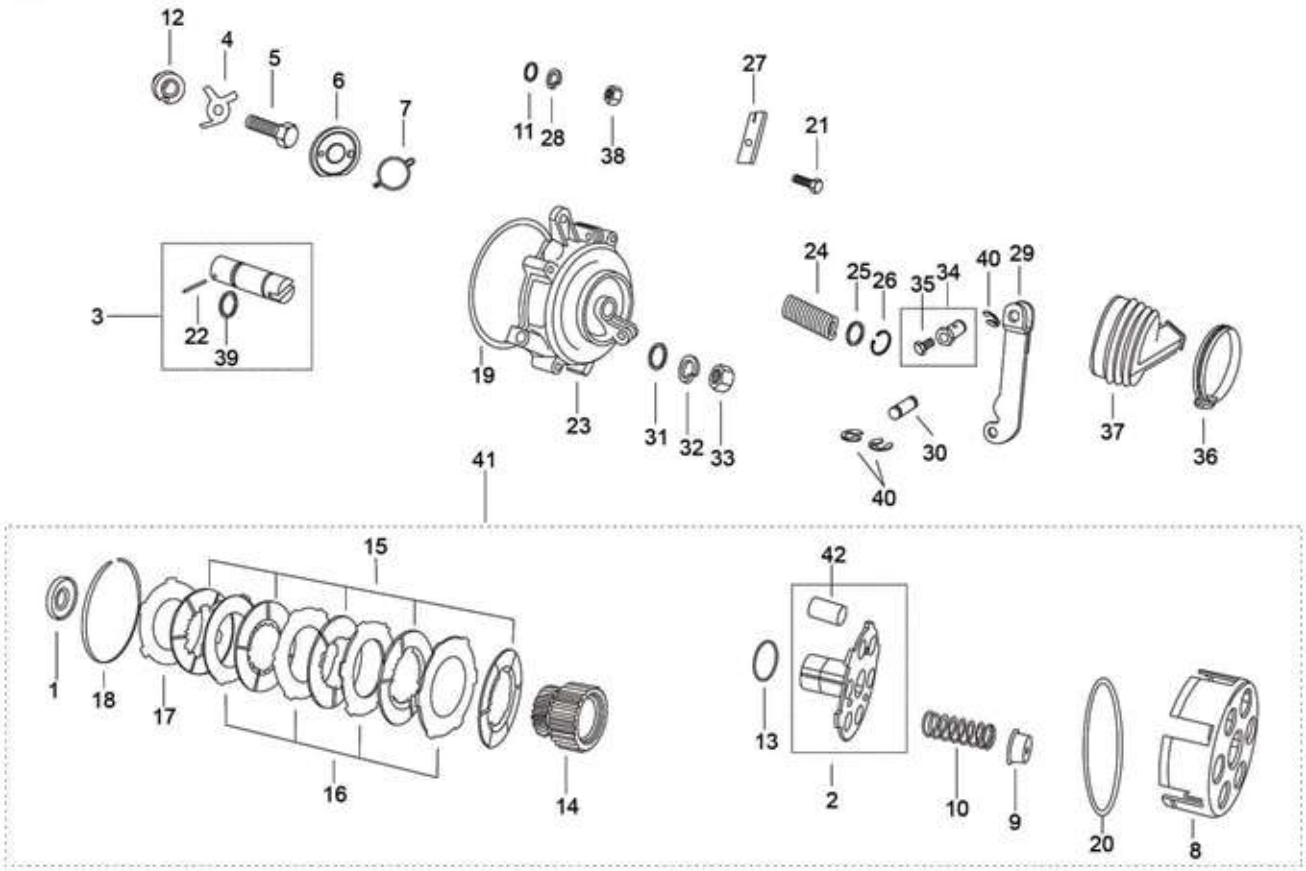
12
4
5
6
7
11
28
38
27
21
3
22
39
19
23
24
25
26
35
34
40
29
31
32
33
30
37
36
40
41
15
42
1
18
17
16
14
13
2
10
9
20
8

53

Print Date: 05-Oct-2022

PLATE-24
CLUCTH & CLUCTH COVER

Fig. No.	Part No.	Description	Qty	Remarks
1	652124	SPACER WASHER-CLUTCH	1	
2	1F000755	CLUTCH SHAFT ASSY. (IMPROVED)	1	
3	1A001457	PLUNGER SHAFT	1	
4	129012013	TAB WASHER	1	
5	E47177007	SCREW M8X1.25X30	1	
6	1A011547R	THRUST BEARING	1	
7	286406	SPRING CLIP	1	
8	1A001455	CLUTCH HOUSING	1	
9	127757011	CUP - CLUTCH SPRING	6	
10	B023890	CLUTCH SPRING	6	
11	3056	PLAIN WASHER M6 OD12	1	
12	129011019	WASHER FOR CLUTCH ASSY.	1	
13	127758015	SHIM	1	
14	1F000754	ENGINE GEAR (MANTANO)	1	
15	127530011	DRIVEN PLATE ASLY	5	
16	127692015	DRIVING PLATE THK. 2.0 MM	4	
17	127693019	PRESSURE PLATE OUTER (VE)	1	
18	127754019	CIRCLIP - CLUTCH BOX	1	
19	825123207	O - RING CLUTCH COVER	1	
20	822031942	SPRING PIN 3 X 19	1	
21	1A011662	CLUTCH COVER	1	
22	127185012	SPRING - CLUTCH COVER	1	
23	1A011662	CLUTCH COVER	1	
24	842001600	CIRCLIP DIA.16(EXT)	1	
25	127471019	BRACKET CLUTCH CABLE GUIDE	1	
26	016408	SPRING WASHER	1	
27	127460010	LINK ASSLY - CLUTCH (IMPROVED)	1	
28	127013013	PIN CLUTCH	1	
29	3056	PLAIN WASHER M6 OD12	4	
30	016408	SPRING WASHER	4	
31	20106	HEX NUT M6	4	
32	120250014	SCREW TERMINAL	1	
33	120238016	BOLT FOR SCREW TERMINAL	1	
34	120170018	HOSE CLIP - CLUTCH COVER BELOW	1	
35	127012019	BELLOW CLUTCH ACTUATING	1	

54

Print Date: 05-Oct-2022

PLATE-24
CLUCTH & CLUCTH COVER

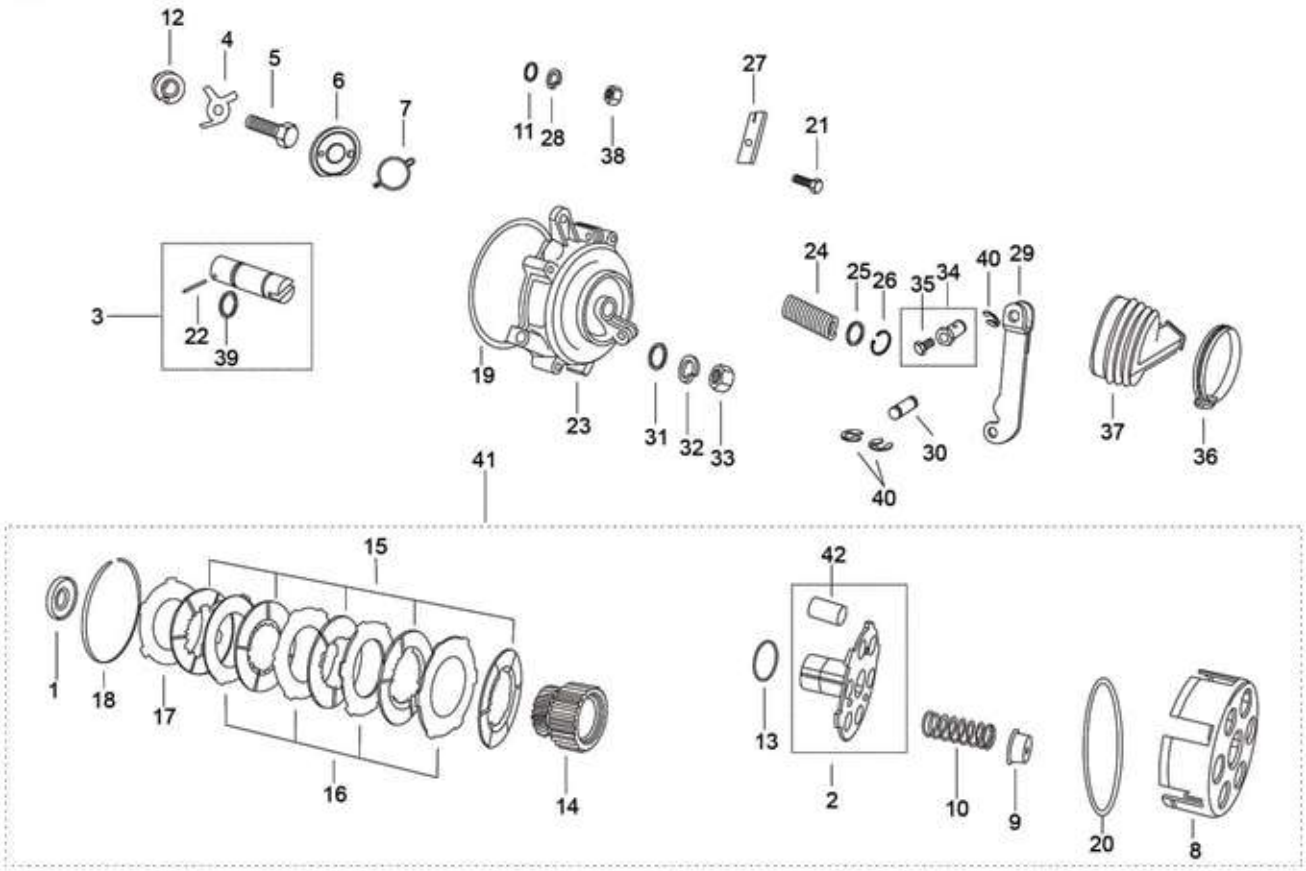
12
4
5
6
7
11
28
38
27
21
3
22
39
19
23
24
25
26
35
34
40
29
31
32
33
30
37
36
40
41
15
42
1
18
17
16
14
13
2
10
9
20
8

55

Print Date: 05-Oct-2022

PLATE-24

CLUCTH & CLUCTH COVER

Fig. No.	Part No.	Description	Qty	Remarks
36	20106	HEX NUT M6	1	
37	B019220	O- RING (PLUNGER SHAFT)	1	
38	843000809	CIRCLIP DIA.8(EXT) TYPE C	4	
39	1F000832	CLUTCH ASSY	1	
40	31092	HEX. HD SCREW M6X25	1	

56

Print Date: 05-Oct-2022

PLATE-25

GEAR SHIFTER AND ITS CONTROL MECHANISM

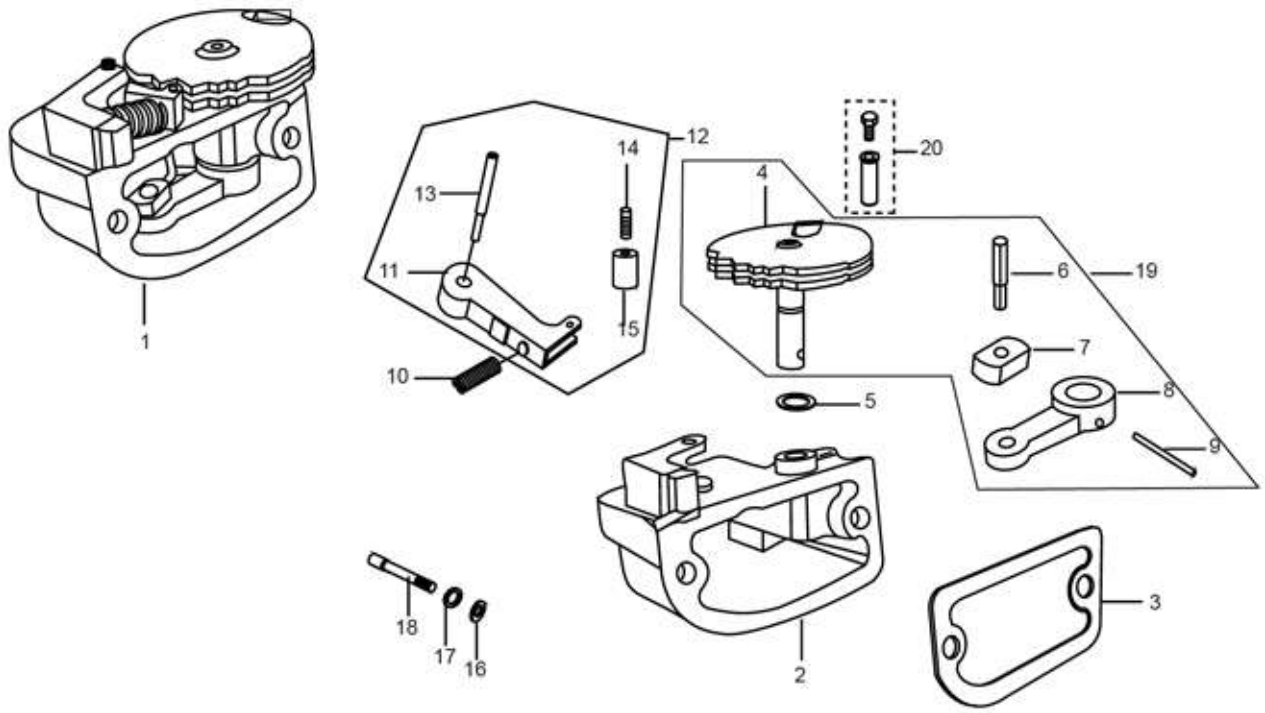
1
2
3
4
5
6
7
8
9
10
11
12
13
14
15
16
17
18
19
20

57

Print Date: 05-Oct-2022

PLATE-25

GEAR SHIFTER AND ITS CONTROL MECHANISM

Fig. No.	Part No.	Description	Qty	Remarks
1	127640012	COMPLETE GEAR SHIFTER HSG ASSLY	1	
2	127641016	GEAR SHIFTER HOUSING	1	
3	128081017	GASKET HOUSING GEAR SHIFTER HOUSING	1	
4	SPB042620	SECTOR AND CONNECTOR PLATE AND LEVER ASSLY.	1	
5	825080209	O - RING - (SECTOR PLATE ASSY.)	1	
6	126022017	PIN FOR SLIDER BLOCK	1	
7	126021013	SLIDER BLOCK	1	
8	SPB042620	SECTOR AND CONNECTOR PLATE AND LEVER ASSLY.	1	
9	17702	SPRING PIN	1	
10	126003011	SPRING GEAR SHIFTER ASSY.	1	
11	126060019	BRACKET ASSY.	1	
12	SP126050014	BKT. WITH ROLLER ASSLY - SPD	1	
13	126054010	SCREW FOR BRACKET	1	
14	126053016	PIN FOR ROLLER	1	
15	126052012	ROLLER	1	
16	3056	PLAIN WASHER M6 OD12	2	
17	016406	SPRING WASHER	2	
18	B016611	FLANGED HEX. HEAD SCREW M6X45 CL10	2	
19	SPB042620	SECTOR AND CONNECTOR PLATE AND LEVER ASSLY.	1	
20	604560	SCREW TERMINAL ASSY. - GEAR CONTROL	2	
21	120238016	BOLT FOR SCREW TERMINAL	1	

58

Print Date: 05-Oct-2022

PLATE-26
ENGINE SUPPORT

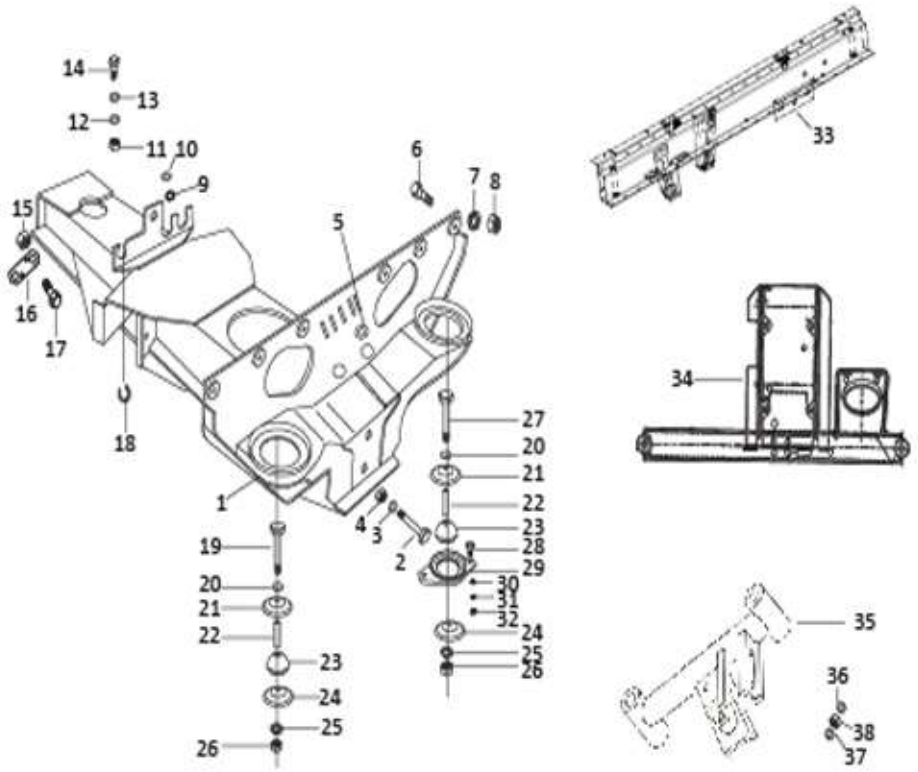
14
13
12
11
10
9
15
16
17
18
6
7
8
5
1
4
3
2
19
20
21
22
23
24
25
26
27
20
21
22
23
28
29
30
31
32
24
25
26
33
34
35
36
38
37

59

Print Date: 05-Oct-2022

PLATE-26
ENGINE SUPPORT

Fig. No.	Part No.	Description	Qty	Remarks
1	6C000382	FRAME ASSLY SUS.& ENGINE SUPPORT	1	common with BS6
2	568689	HEX HEAD BOLT M10X100	2	
3	286328	PLAIN WASHER 20X10.2X2	2	
4	231370	SELF BREAKING NUT M10	2	
5	15478	GROMMET4	2	
6	31119	HEX HD SCREW M8 X 25	6	
7	016408	SPRING WASHER	6	
8	20108	HEX NUT M8	6	
9	178610	GROMMET	1	
10	016406	SPRING WASHER	2	
11	20108	HEX NUT M8	2	
12	016408	SPRING WASHER	2	
13	2383	PLAIN WASHER M20X8.5X2	2	
14	31119	HEX HD SCREW M8 X 25	2	
15	231370	SELF BREAKING NUT M10	2	
16	632299	PLATE	2	
16	632299	PLATE	1	
17	632247	HEX HDD SCREW M10X30 CC8.8	2	
18	568140	GROMMET	1	
19	604948	HEX.HDD BOLT M8 X 110 WITH POINTING	2	
20	2383	PLAIN WASHER M20X8.5X2	3	
21	569375	PLATE	3	
22	569241	SPACER	2	
23	265091	DUMPER ENGINE MTG.	2	
24	569244	PLATE	3	
25	016408	SPRING WASHER	3	
26	15335	HEX HD NUT M8	2	
27	272178	HEX. HDD BOLT M8 X 122 CL 10.9	1	
28	31154	HEX HDD SCREW M10X22 CL 8.8	2	
29	B003286	REAR AVM SUPPORT BKT. ASSY.	1	
30	286328	PLAIN WASHER 20X10.2X2	2	
31	16410	SPRING WASHER	2	
32	20108	HEX NUT M8	4	
33	B001648	CROSS MEMBER ENGINE SUPPORT REAR SUB - ASSLY WITH I.P	1	
34	643711R	FRT CROSS MEMBER ASSY. ENG. MTG.	1	

60

Print Date: 05-Oct-2022

PLATE-26
ENGINE SUPPORT

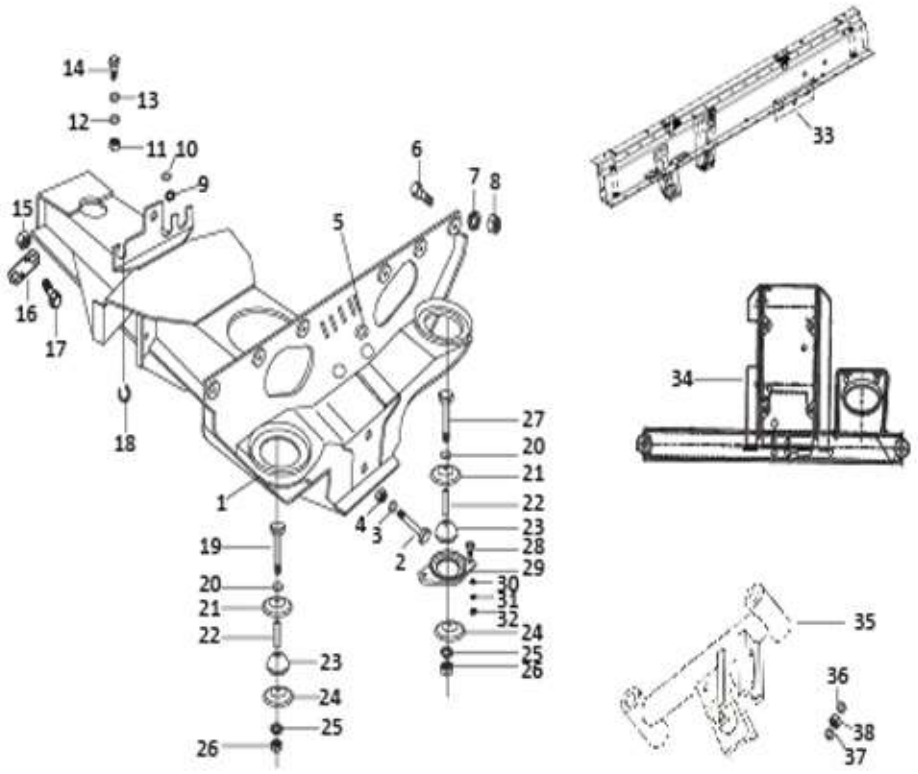
14
13
12
11
10
9
15
16
17
18
6
7
8
5
1
4
3
2
19
20
21
22
23
24
25
26
27
20
21
22
23
28
29
30
31
32
24
25
26
33
34
35
36
38
37

61

Print Date: 05-Oct-2022

PLATE-26
ENGINE SUPPORT

Fig. No.	Part No.	Description	Qty	Remarks
35	643711R	FRT CROSS MEMBER ASSY. ENG. MTG.	1	
36	286328	PLAIN WASHER 20X10.2X2	2	
37	20110	HEX NUT M10	4	
38	16410	SPRING WASHER	2	
39	118806	PROTECTION BELLOW	1	

62

Print Date: 05-Oct-2022

PLATE-27
MAIN FRAME/BATTERY BKT

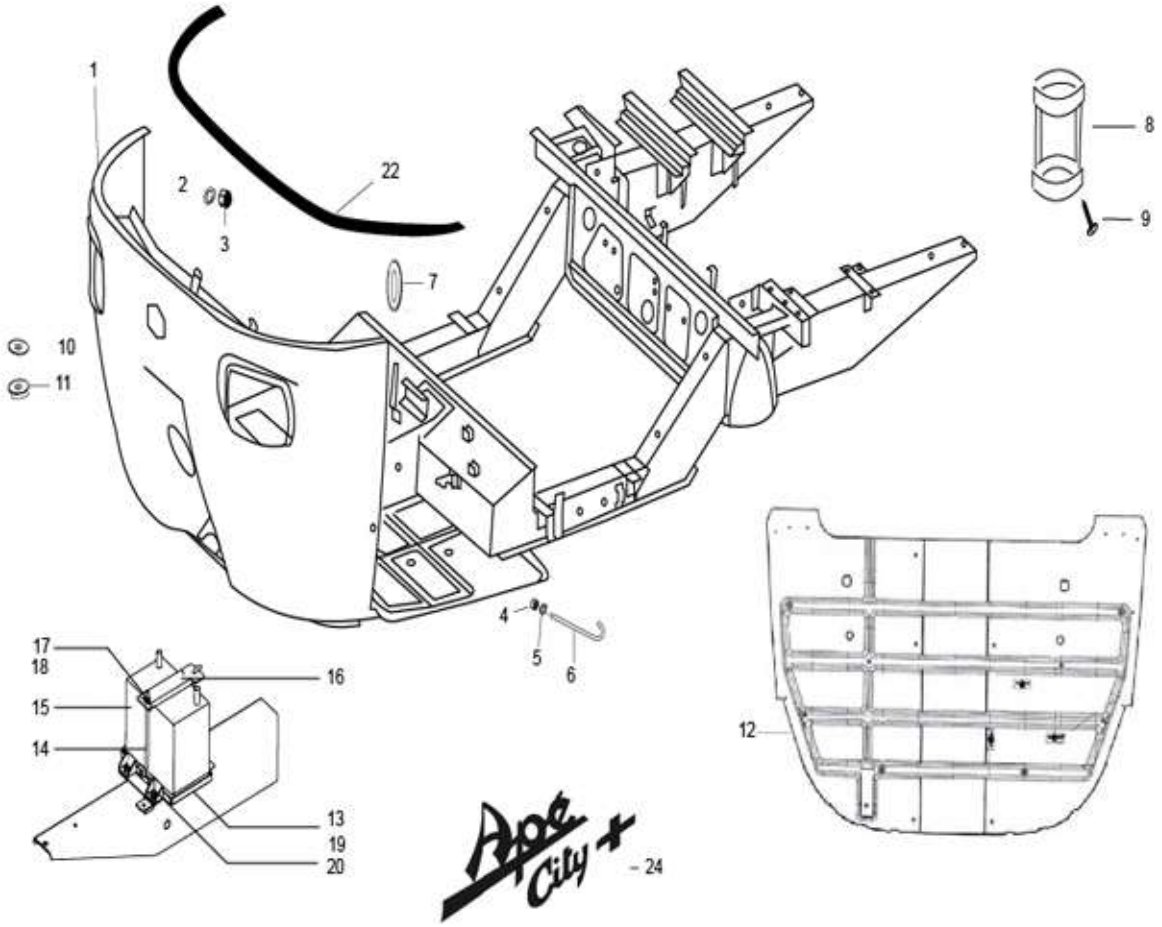
1
2
3
22
7
8
9
10
11
4
5
6
17
18
16
15
14
13
19
20
12
Ape City +
24

63

Print Date: 05-Oct-2022

PLATE-27

MAIN FRAME/BATTERY BKT

Fig. No.	Part No.	Description	Qty	Remarks
1	B079223GY	MAIN FRAME ASSLY APE CITY+DSL_GY	1	FOR HSRP
1	B079223BL	MAIN FRAME ASSLY APE CITY+DSL_BL	1	FOR HSRP
1	B079223BW	MAIN FRAME ASSLY APE CITY+DSL_BW	1	FOR HSRP
1	B079223CB	MAIN FRAME ASSLY APE CITY+DSL_CB	1	FOR HSRP
1	B079223NB	MAIN FRAME ASSLY APE CITY+DSL_NB	1	FOR HSRP
1	B079223WR	MAIN FRAME ASSLY APE CITY+DSL_WR	1	FOR HSRP
1	B079223EG	MAIN FRAME ASSLY APE CITY+DSL_EG	1	FOR HSRP
2	003054	PLAIN WASHER	5	
3	20104	HEX NUT M4	5	
4	20108	HEX NUT M8	1	
5	3058	PLAIN WASHER 15X8.4X1.5	1	
6	B077885	TENSION ROD ASSY	1	
7	B075964	GROMMET WIRING HAND BRAKE	1	
8	B041392	BOTTLE CARRIER STAND	1	
9	660168	PAN SELF TP. SCREW 10 SGX13AB	2	
10	B075989	GROMMET FRT PART OF CENTRAL BEAM	2	
11	604756	HOSE CLIP	2	
12	B074149	CABIN FLOOR ASSLY.	1	
13	567520	BATTERY TRAY	1	
14	604890	HALF TIE ROD ASSY.	1	
15	587650R	BATTERIES FOR 3WH (50AH)	1	Domestic
16	B003978	BATTERY HOLDING PLATE	1	
17	20108	HEX NUT M8	1	
18	3058	PLAIN WASHER 15X8.4X1.5	1	
19	016408	SPRING WASHER	1	
20	13861	PLAIN WASHER 20X8.2X2.5	4	
21	31118	SCREW M8X20	4	
22	B024474	BEADDING LINING	1	
23	604972	PIVOT GASKET-APE LOGO PLATE	1	
24	B078874	APE CITY PLUS STICKER (FRONT PANEL)	1	
25	B074637	BEEDING DOME SIDE PILLAR (PET/DLS)	1	
15	B006806	BATTERY(EXIDE _ EK 50 L)_ EXPORT (501)	1	Export

64

Print Date: 05-Oct-2022

PLATE-28
WIND SHIELD/GLASS/BEADING

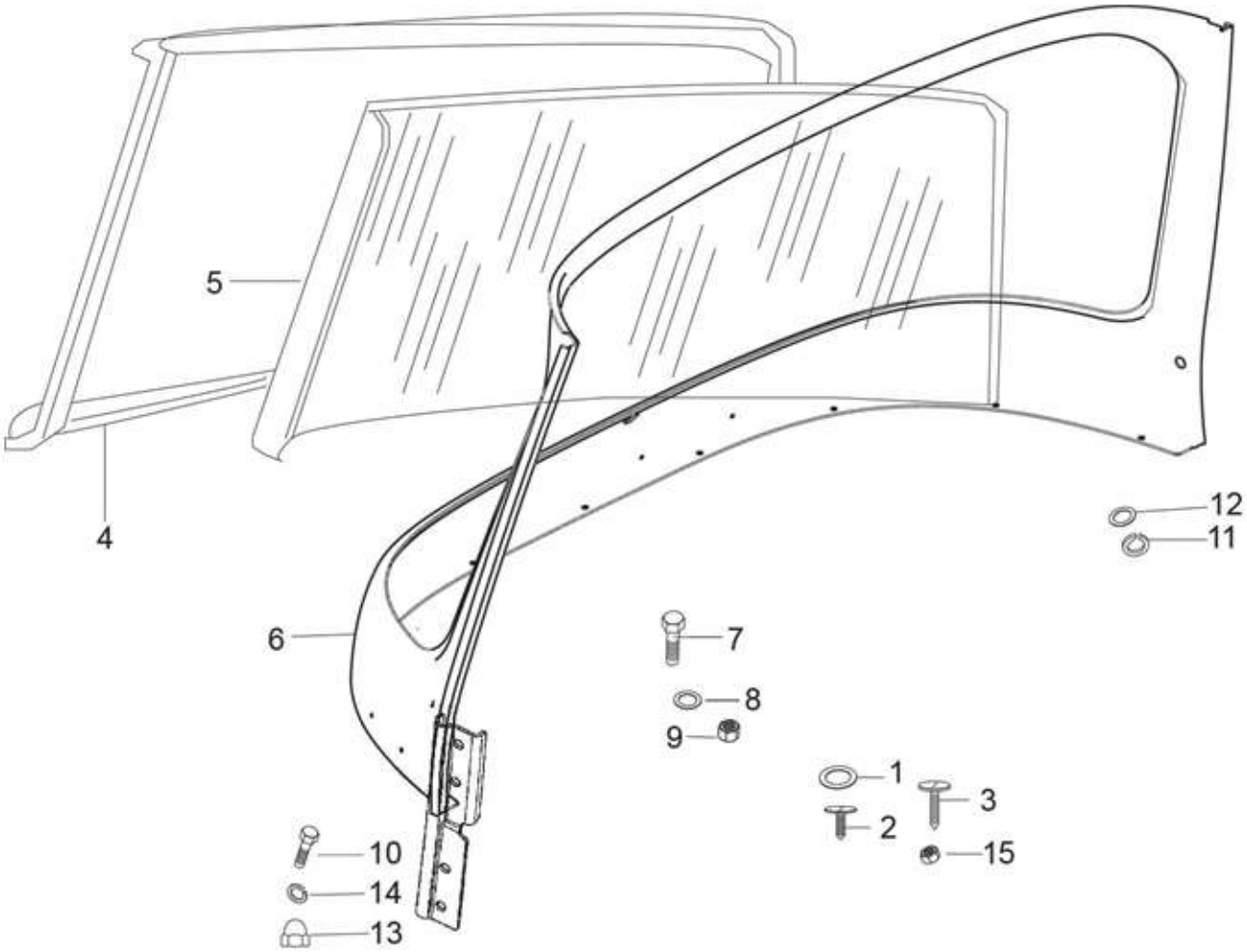
5
4
12
11
6
7
8
9
1
3
2
15
10
14
13

65

Print Date: 05-Oct-2022

PLATE-28

WIND SHIELD/GLASS/BEADING

Fig. No.	Part No.	Description	Qty	Remarks
1	16670	PLAIN WASHER 12X4.5X1	2	
2	568692	PAN SELF TAP SCREW 6SG X 16AB	2	
3	18630	PAN SELF TAP SCREW 6SG X 25AB	2	
4	B073626	WINDSHIELD PACKING	1	
5	B073601	LAMINATED WINSHIELD GLASS	1	E - Marked (Export)
6	B073602ED	WINDSCREEN FRAME (COMPLETE)	1	
7	B001386	HEX HEAD SCREW M5X20	9	
8	16405	SPRING WASHER M5	16	
9	20105	PLAIN NUT M5	20	
10	30242	SLOT CH. HD. SCREW	8	
11	808000826	PLAIN WASHER M8	2	
12	016408	SPRING WASHER	2	
13	568713	DOME NUT	8	
14	3055	PLAIN WASHER M5	8	
15	20104	HEX NUT M4	8	

66

Print Date: 05-Oct-2022

PLATE-29
ELECTRICAL DEVICES

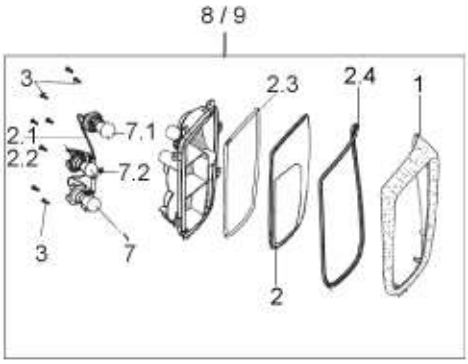
8 / 9
3
2.1
2.2
7.1
7.2
3
7
2.3
2.4
1
2

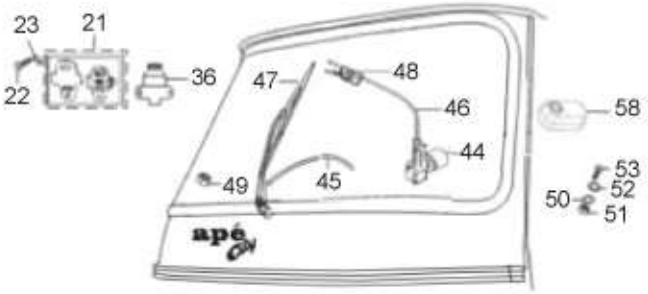
23
21
22
36
47
48
46
44
58
49
45
53
52
50
51

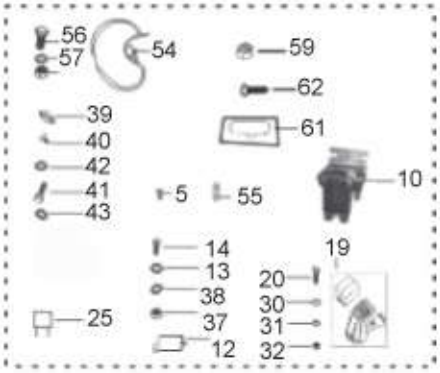
56
57
54
59
62
39
40
42
41
43
61
10
5
55
14
13
38
37
12
25
19
20
30
31
32

16
17
11

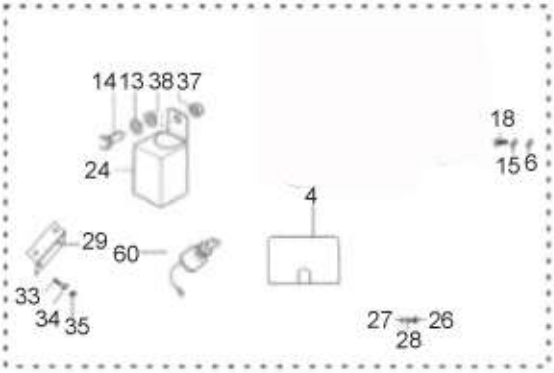
14 13 38 37
24
18
15 6
4
29
60
33
34 35
27
26
28

65
64

67

Print Date: 05-Oct-2022

PLATE-29
ELECTRICAL DEVICES

Fig. No.	Part No.	Description	Qty	Remarks
1	6D000423	OUTER BEZEL WITH RUBBER BEADING LH	1	BLACK
1	6D000432	OUTER BEZEL WITH RUBBER BEADING RH	1	BLACK
1	6D000387	OUTER BEZEL WITH RUBBER BEADING RH	1	PULSER GREY
1	6D000388	OUTER BEZEL WITH RUBBER BEADING LH	1	PULSER GREY
2	6D000420	COMPLETE LENS LH	1	
2	6D000421	COMPLETE LENS RH	1	
2.1	6D000424	WIRE ASSY (WITHOUT REVERSE)	2	
2.2	6D000435	WIRE ASSY(WITH REVERSE)	2	
2.3	6D000426	GASKET INBUILT LENS AND HOUSING	2	
2.4	6D000437	RUBBER BEADING	2	Under Development
3	6D000425	SCREW 3.5X10	16	
4	B073492	PLASTIC COVER-ELECTRICAL CLUSTER	1	
5	604557	FUSE (10A)	6	
6	3055	PLAIN WASHER M5	1	
7	6D000429	BULB 12V PY21W	2	
7.1	6D000427	BULB 12V P21/5W	2	
7.2	6D000428	BULB 12V P21W	2	
8	B076209	TAIL LAMP _ASSLY _LH CITY	1	Bazel- Black Colour
8	6D000386	TAIL LAMP ASSLY LH WITH REVERSE FUCTION (BEZEL -PULSAR GREY)	1	BEZEL -PULSAR GREY (Silver)
8	6D000199	TAIL LAMP ASSLY LH WITH/OUT REVERSE FUCTION	1	EXPORT
9	B076210	TAIL LAMP _ASSLY _RH CITY	1	Bazel- Black Colour
9	6D000385	TAIL LAMP ASSLY RH WITH REVERSE FUCTION (BEZEL -PULSAR GREY)	1	BEZEL -PULSAR GREY (Silver)
10	587671R	4 ST RELAY SOLENOID	1	
11	B075977	NUMBER PLATE - REAR (INDIAN MARKET)	1	
12	B023727R	CONTACTOR	1	
13	12546	PLAIN WASHER / MULTI TOOTH LOCK WASHER M5	1	
14	31057	HEX HEAD SCREW M5 X 14 CL 8.8	1	
15	568721	SPRING WASHER M4	2	
16	639088	TAIL LAMP	1	E - Marked (Export)
17	71633	STOP AND PARKING BULB 12V 10/5 W	1	
18	8451	PAN SELF TP SCREW 6 SGX13 AB	2	
19	567581	FOUR POLE FUSE BOX	1	
20	31058	HEX HEAD SCREW M5 X 16 CC8.8	2	
21	567498R	BRAKE/REVERSE LIGHT SW (INTEGRAL CAP)-PAV	2	
22	15996	PHIL RD HD SCREW M4X12	2	

68

Print Date: 05-Oct-2022

PLATE-29
ELECTRICAL DEVICES

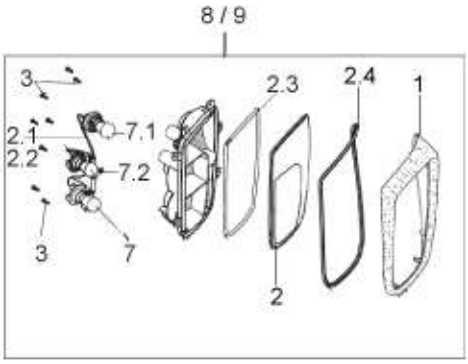
8 / 9
3
2.1
2.2
7.1
7.2
3
7
2.3
2.4
1
2

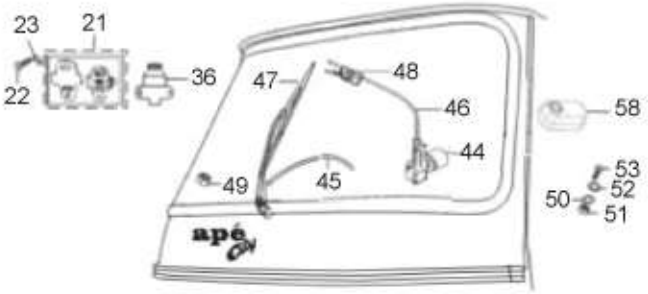
23
21
22
36
47
48
46
44
58
49
45
53
52
50
51

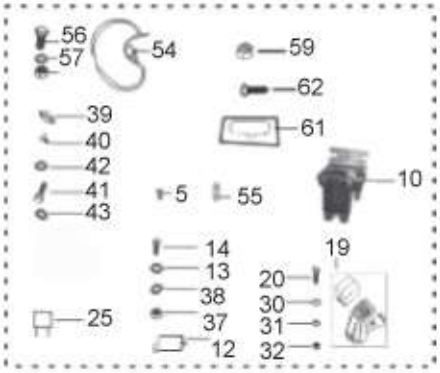
56
57
54
59
62
39
40
42
41
43
61
10
5
55
14
13
38
37
12
25
19
20
30
31
32

16
17
11

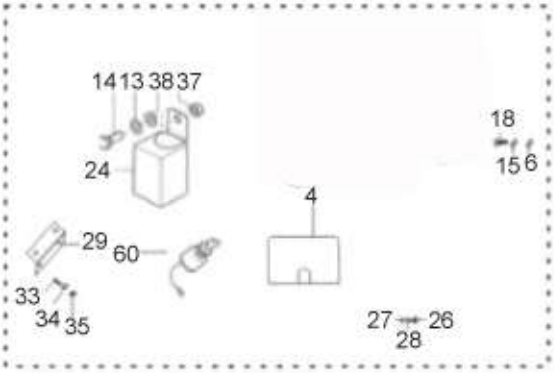
14 13 38 37
24
18
15 6
4
29
60
33
34 35
27
26
28

65
64

69

Print Date: 05-Oct-2022

PLATE-29
ELECTRICAL DEVICES

Fig. No.	Part No.	Description	Qty	Remarks
23	003054	PLAIN WASHER	2	
24	B023726R	REMOTE CONTROL SWITCH	1	
24	B023727R	CONTACTOR	1	
25	567706	FUSE 30 A	1	
26	12136	NUT / NYLOCK NUT M5	2	
27	6078	PLAIN WASHER 12 X 5.2 X 1	2	
28	16405	SPRING WASHER M5	2	
29	B075693	MTG BKT ONE WAY FUSE - HOLDER	1	
30	3055	PLAIN WASHER M5	2	
30	6078	PLAIN WASHER 12 X 5.2 X 1	2	
31	6965	SPRING WASHER DIA 5	2	
32	20105	PLAIN NUT M5	2	
33	31058	HEX HEAD SCREW M5 X 16 CC8.8	22	
34	6965	SPRING WASHER DIA 5	2	
35	20105	PLAIN NUT M5	2	
36	567498R	BRAKE/REVERSE LIGHT SW (INTEGRAL CAP)-PAV	21	
37	20105	PLAIN NUT M5	1	
38	3055	PLAIN WASHER M5	1	
39	B075693	MTG BKT ONE WAY FUSE - HOLDER	1	
40	568692	PAN SELF TAP SCREW 6SG X 16AB	1	
41	31088	HEX HD SCREW M6 X 16 CL 8.8 (811061623)	1	
42	3056	PLAIN WASHER M6 OD12	1	
43	016406	SPRING WASHER	1	
44	B073685	WIPER MOTOR ASSY. WITH MTG. BKT.	1	
45	B073821	BUNDY TUBE OUTER (UP)	1	
46	B073682	WIPER BUNDY - MOTOR TO WHEEL BOX	1	
47	B073600	WIPER ARM & BLADE ASSY	1	
48	569197	WHEEL BOX ASSY. (MOD.)	1	
49	569165	DOME NUT	1	
50	016406	SPRING WASHER	1	
51	20106	HEX NUT M6	6	
52	3056	PLAIN WASHER M6 OD12	6	
53	31088	HEX HD SCREW M6 X 16 CL 8.8 (811061623)	6	
54	B024948R	BAT + VE _BC SW -4ST REL(CITY 200 C/L)	1	Not applicable for DSL
55	925786	ECU - FUSE (2A) (N.I)	1	Not applicable for DSL

70

Print Date: 05-Oct-2022

PLATE-29
ELECTRICAL DEVICES

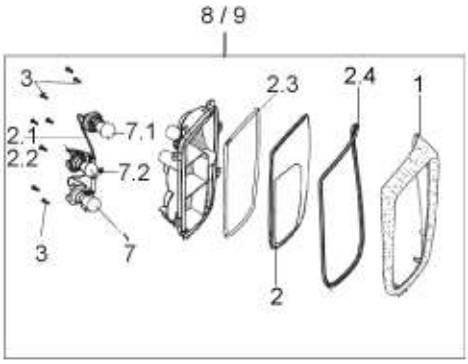
8 / 9
3
2.1
2.2
7.1
7.2
3
7
2.3
2.4
1
2

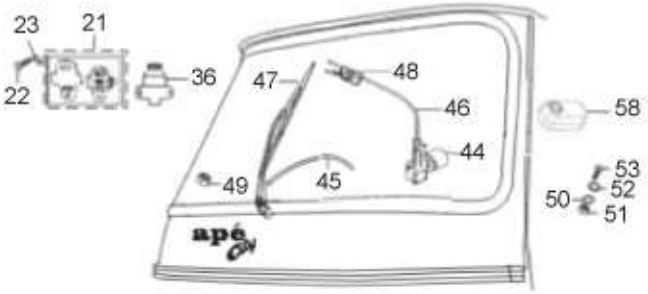
23
21
22
36
47
48
46
44
58
49
45
53
52
50
51

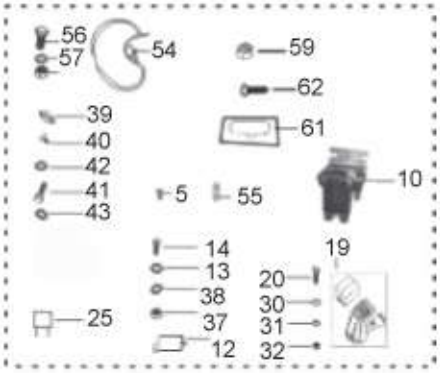
56
57
54
59
62
39
40
42
41
43
61
10
5
55
14
13
38
37
12
25
19
20
30
31
32

16
17
11

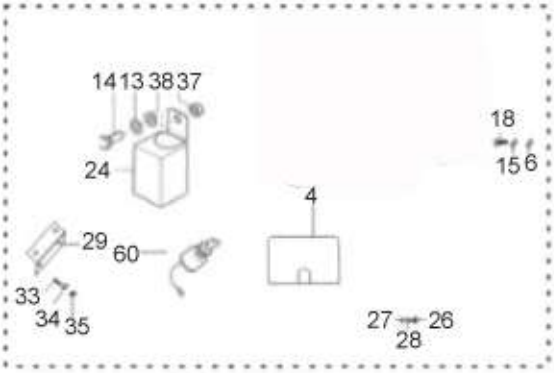
14 13 38 37
24
18
15 6
4
29
60
33
34 35
27
26
28

65
64

71

Print Date: 05-Oct-2022

PLATE-29

ELECTRICAL DEVICES

Fig. No.	Part No.	Description	Qty	Remarks
56	31088	HEX HD SCREW M6 X 16 CL 8.8 (811061623)	2	
57	016406	SPRING WASHER	2	
58	B073715	CABIN LAMP	1	
59	20106	HEX NUT M6	2	
60	B024532	KEY IGNITION SWITCH W/COUPLER (PAVNA)	1	
61	B074491	ENGINE COMPARTMENT LAMP WITH PIGTAIL (UP)	1	
62	B074539	PHILIPS COUNTER HEAD SCREW	2	
63	B076308	RUBBER SPACER (LIGHT RAGISTRATION LAMP)	1	
64	642032	PUSH BUTTON-CLUTCH	1	
65	640762	PUSH BUTTON REVERSE	1	

72

Print Date: 05-Oct-2022

PLATE-30

FRONT MUDGUARD & HEAD LAMP ASSY.

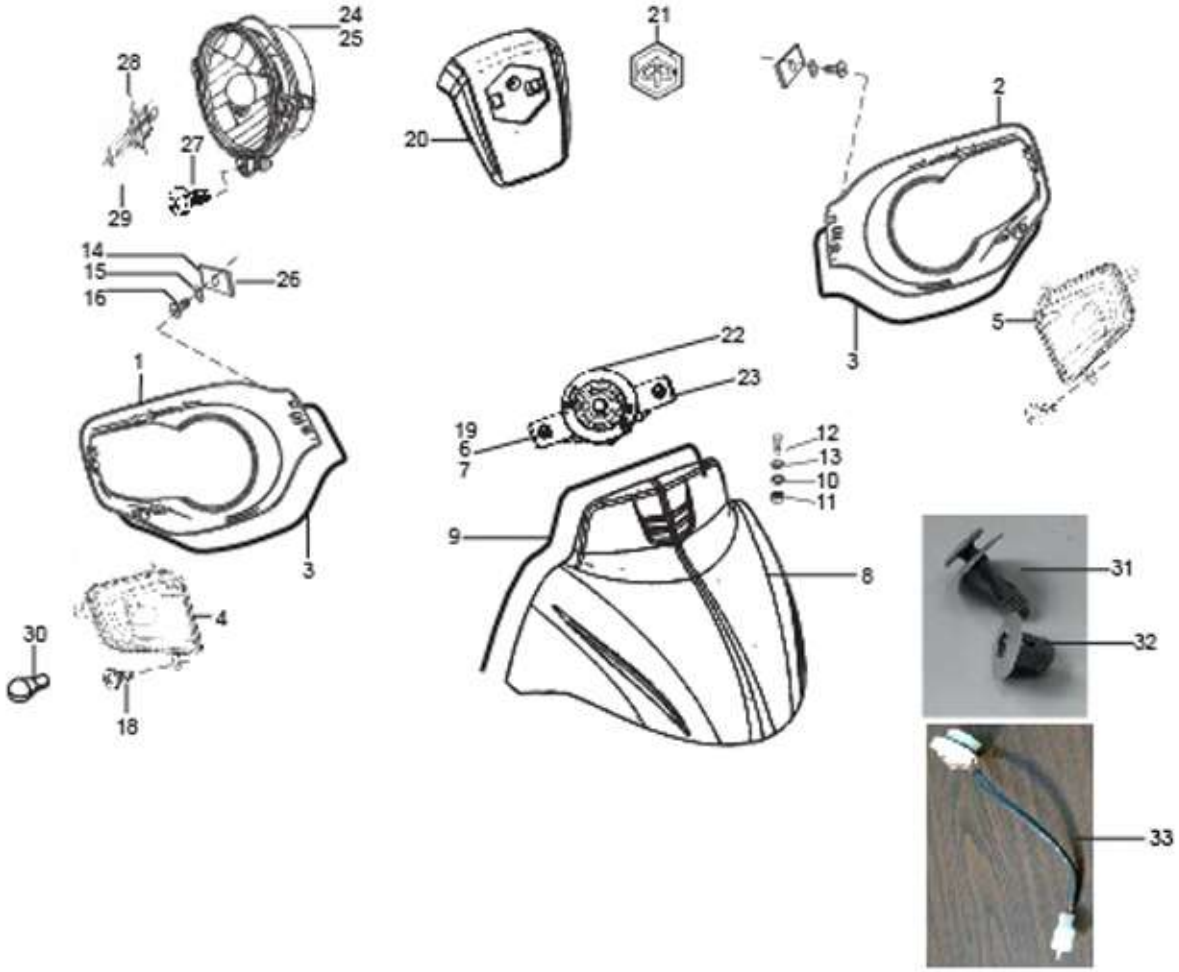
24
25
28
27
29
21
20
2
14
15
16
26
5
3
22
23
1
19
6
7
12
13
10
11
9
8
31
32
30
4
18
33

73

Print Date: 05-Oct-2022

PLATE-30

FRONT MUDGUARD & HEAD LAMP ASSY.

Fig. No.	Part No.	Description	Qty	Remarks
1	B075999	HEAD LAMP COVER LH	1	E - Marked (Export)
2	B076000	HEAD LAMP COVER RH	1	E - Marked (Export)
3	B076191	HL BEZEL BEADING	2	
4	6D000145R	FRONT DIRECTION INDICATORS LH	1	E - Marked (Export)
4A	B078272	BLINKER HOUSING (RH)-(HOUSING + GLASS)	1	
5	6D000146R	FRONT DIRECTION INDICATORS RH	1	E - Marked (Export)
5A	B078274	BLINKER HOUSING (LH)-(HOUSING + GLASS)	1	
6	3056	PLAIN WASHER M6 OD12	4	
7	20106	HEX NUT M6	4	
8	B075974	FRONT MUDGUARD	1	
9	B076801	FRONT MUDGUARD RUBBER BEADING	1	
9	B076802	FRONT MUDGUARD PARTITION RUBBER BEADING	1	
10	013880	PLAIN WASHER	8	
11	20106	HEX NUT M6	4	
12	31089	HEX HEAD SCREW M6X18 CL 8.8	4	
13	78307	BENT SPRING WASHER M6	4	
14	8080	SPRING PLATE	4	
15	3055	PLAIN WASHER M5	10	
16	660168	PAN SELF TP. SCREW 10 SGX13AB	5	
17	157716	SCREW ANCHORE	8	
18	B074539	PHILIPS COUNTER HEAD SCREW	4	
19	016406	SPRING WASHER	4	
20	B076001	LOGO SUPPORT_CITY UPGRADE	1	
21	B076120	HEXAGONAL EMBLEM	1	
22	B074033	HORN ASSLY(DIA 70)	1	E - Marked (Export)
23	B073953	HORN MTG. BKT S/A	1	
24	6D000143R	HEAD LAMP ASSLY LH - NUOVO	1	E - Marked (Export)
25	6D000144R	HEAD LAMP ASSLY - RH (NUOVO)	1	E - Marked (Export)
26	119735	PROTECTION SECURING SPRING/SPR. FOR PROTECTION	2	
27	15900	HEAD LAMP SECURING SCREW/PAN SELF TAP SCREW	6	
28	B078286R	HS1_BULB (12 V _35/35W	6	
29	567593	BULB 12V 5W / LAMP 4W	2	
30	925581	INDICATOR LIGHT BULB 12V 21W AMBER COLOUR	2	
31	B076606	GROMMET	2	
32	B076605	PIN	2	

74

Print Date: 05-Oct-2022

PLATE-30

FRONT MUDGUARD & HEAD LAMP ASSY.

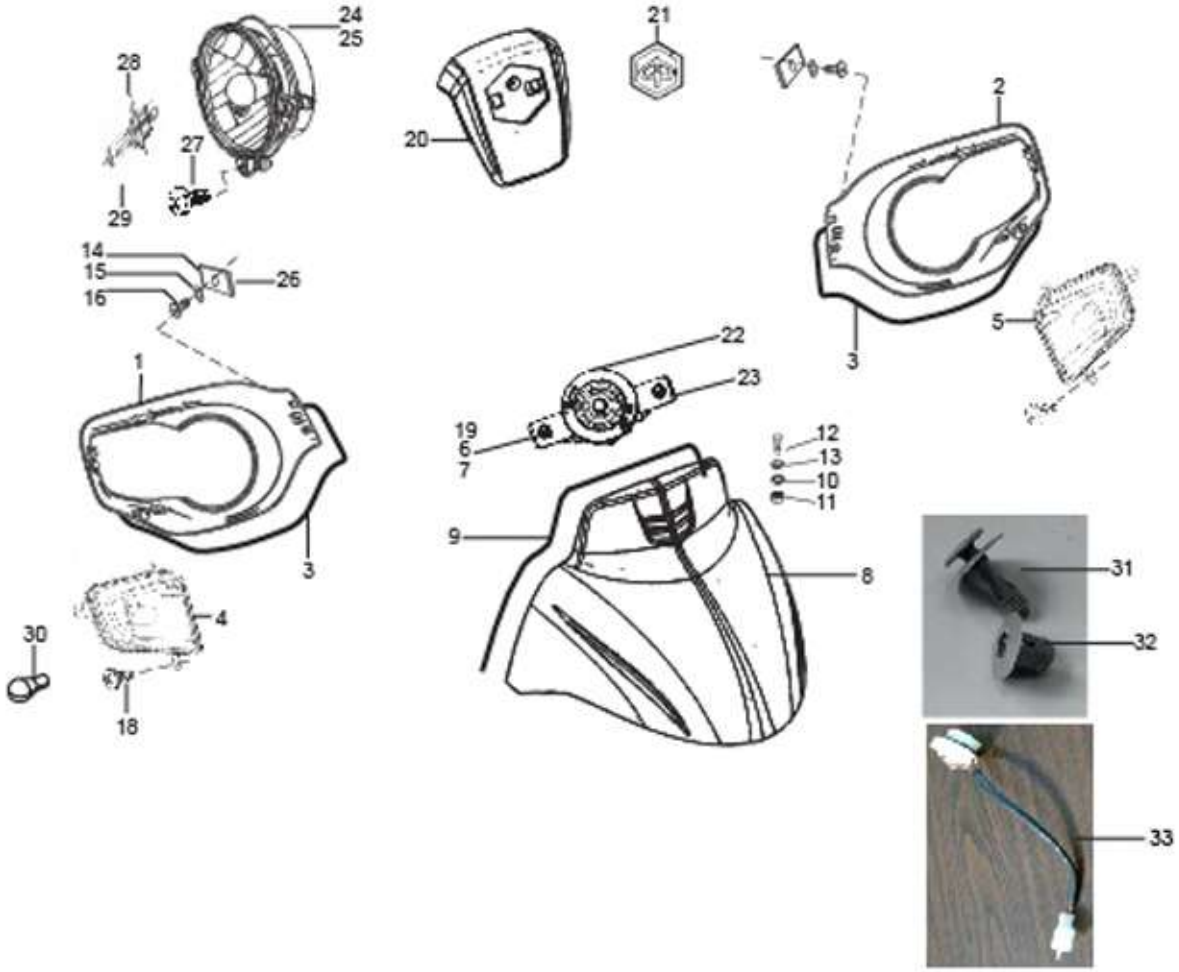
24
25
28
27
29
21
20
2
14
15
16
26
5
3
22
23
1
19
6
7
12
13
10
11
9
8
31
32
30
4
18
33

75

Print Date: 05-Oct-2022

PLATE-30

FRONT MUDGUARD & HEAD LAMP ASSY.

Fig. No.	Part No.	Description	Qty	Remarks
33	940162	BULB HOLDER WITH PIGTAILS	2	

76

Print Date: 05-Oct-2022

PLATE-31
DASHBOARD ASSEMBLY

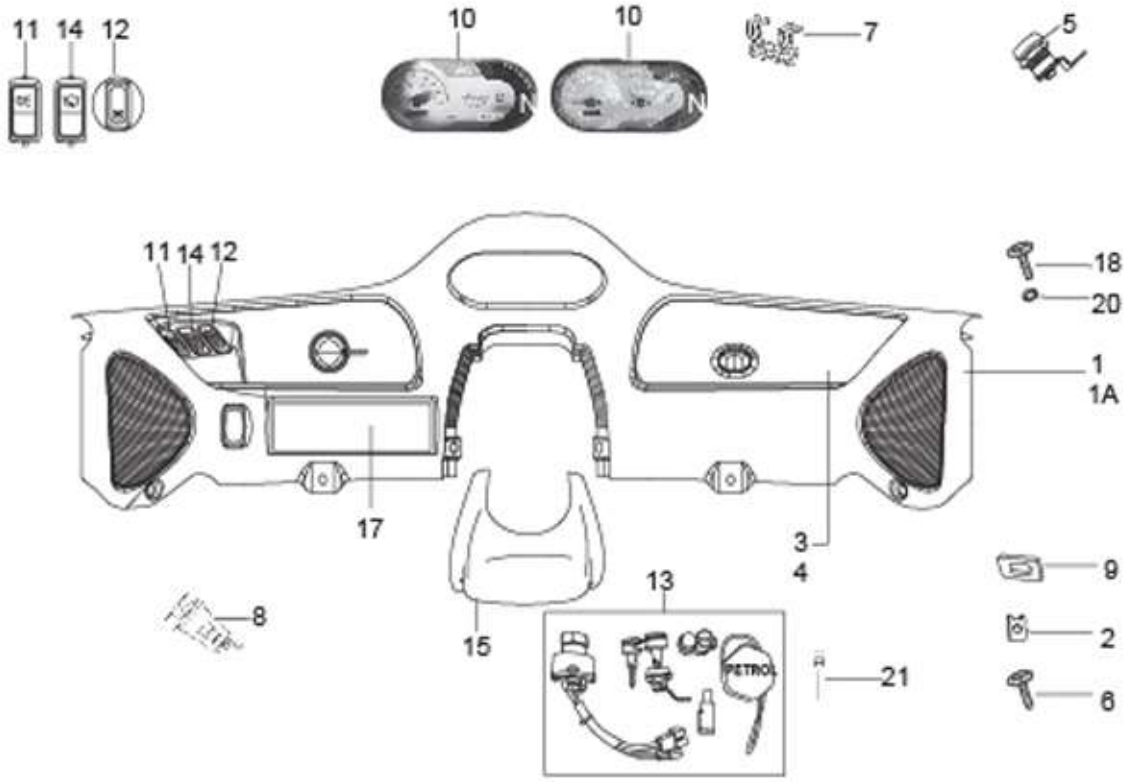
11
14
12
10
10
7
5
11
14
12
18
20
1
1A
17
3
4
9
13
8
15
2
21
6
PETROL

77

Print Date: 05-Oct-2022

PLATE-31

DASHBOARD ASSEMBLY

Fig. No.	Part No.	Description	Qty	Remarks
1	B077535SP	DASHBOARD ASSLY. COMPLETE (D+5 DIESEL) _SPD	1	
1A	B073809	DASH BOARD ASSY.	1	
2	8080	SPRING PLATE	4	
3	B073810	GLOVE BOX COVER	1	
4	568671	GASKET - GLOW BOX COVER (N.I.)	4	
5	B024169	GLOVE BOX LOCK WITH KEY	1	
6	660168	PAN SELF TP. SCREW 10 SGX13AB	4	
7	B073814	HINGE	1	
8	B074905	MOBILE CHARGER	1	
9	643691	BOLT LOCK PLATE	1	
10	6D000214	INSTRUMENT CLUSTER-PETROL	1	
11	B073478R	SWITCH 3 POSITION	1	
12	B073481R	HAZARD WARNING SWITCH WITH CROWN CAP (12V)(VE)	1	
13	6G000033	LOCK SET PASSENGER COMMON KEY - PB	1	
14	B073479R	WIPER MOTOR SWITCH/ SWITCH WIPER MOTOR	1	
15	B073811	STEERING COLUMN COVER	1	
16	B073812	UTILITY BOX	1	
17	B023976	CSK PHILIPS HEAD SCREW M5X15	8	
18	B074262	PIN	2	
19	6078	PLAIN WASHER 12 X 5.2 X 1	8	
20	B074275	RUBBER DAMPER	2	

78

Print Date: 05-Oct-2022

PLATE-32
REAR SUSPENSION

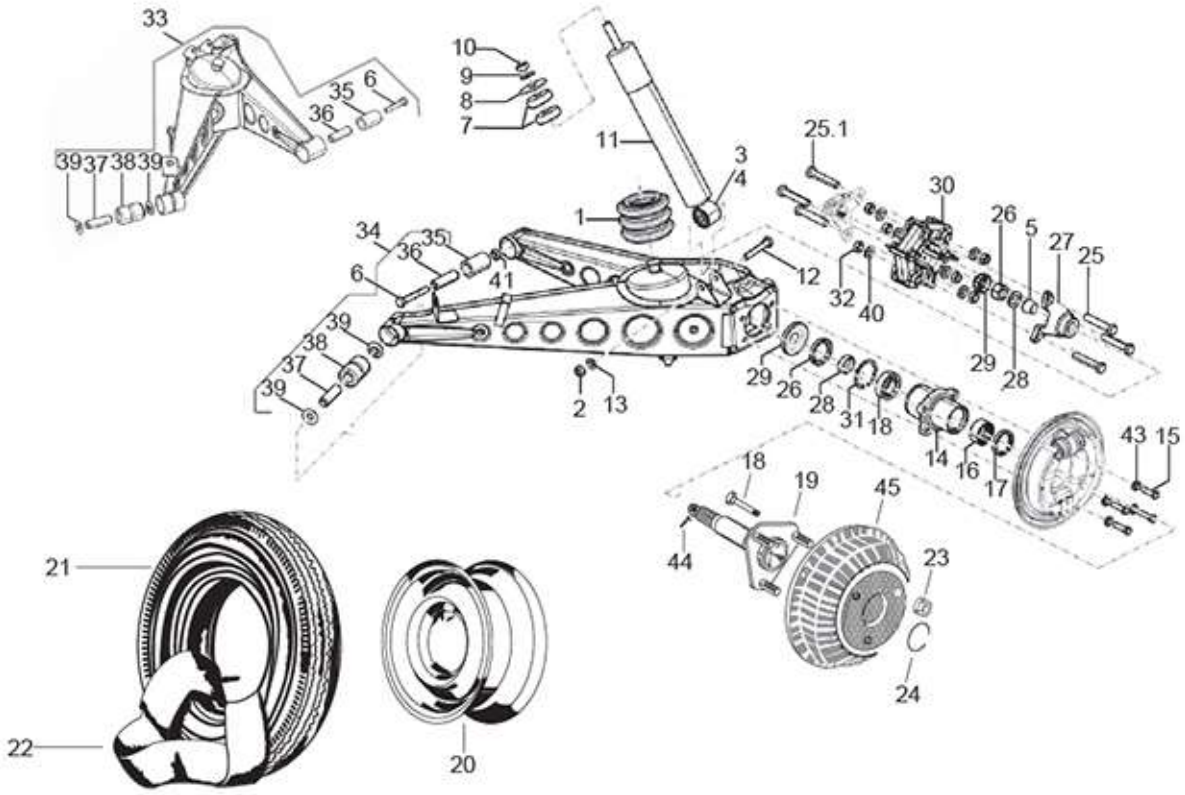
33
10
9
8
7
35
6
36
39 37 38 39
11
3
4
25.1
30
26
5
27
25
1
34
35
36
6
41
12
32
40
39
38
37
39
29
26
28
31
18
29
28
2
13
14
16
17
43
15
18
19
45
44
23
21
C
24
22
20

79

Print Date: 05-Oct-2022

PLATE-32
REAR SUSPENSION

Fig. No.	Part No.	Description	Qty	Remarks
1	B076290	RUBBER BUMPER	2	
2	231370	SELF BREAKING NUT M10	2	
3	157103	BUSH - SHOCK ABSORBER	2	NS
4	107827	SPACER	1	
5	128633	CONE	1	
6	643741	HEX HDD BOLT M10 X 80 CL 12.9	4	
7	157103	BUSH - SHOCK ABSORBER	4	NS
8	6066	PL WASHER 10.5X38X9	2	
9	16410	SPRING WASHER	2	
10	20110	HEX NUT M10	2	
11	136451R	SHOCK ABSORBER REAR	2	
12	267068	HEX HEAD BOLT M10 X 60 CC 10.9	2	
13	286328	PLAIN WASHER 20X10.2X2	2	
14	6C000662	REAR WHEEL HUB	2	
15	652520	BOLT FOR AXLE M12 X 40 (VE WHEEL RIM)	8	
16	661282	NEEDLE ROLLER BEARING	2	
17	20359	SEAL RING	2	
18	243303R	DEEP GROVE BALL BRG-RR WH AXLE	2	
19	6C000060	WHEEL AXLE	2	
20	644973R	WHEEL RIM ASSY.	4	
21	587971	TYRE 4.50 X 10 8 PR	4	
22	151924	INNER TUBE TYRE 4.5 X 10 INCH	4	
23	660931	WHEEL NUT (M12 X 1.5)	3	
24	107870	ELASTIC RING	2	
25	15594	HEX HDD BOLT M10 X 35	6	
25	B024373	ALLEN BOLT M10X65 CL 10.9	6	
26	196302	OIL SEAL	2	
27	587617	ELASTIC JOINT CONNECTION HUB (WHL - SIDE)	2	
28	661267	RING	2	
29	109892	PROTECTION CUP RR HUB	2	
30	604535	FLEXIBLE COUPLING	2	
31	6650	CIRCLIP DIA 50 (INT)	2	
32	231370	SELF BREAKING NUT M10	12	
33	6C000363	ARM ASSLY RH RR SUSP. WITH BUSH-REG	1	Communized with BS6
34	6C000362	ARM ASSLY LH RR SUSP. WITH BUSH-REG	1	Communized with BS6

80

Print Date: 05-Oct-2022

PLATE-32
REAR SUSPENSION

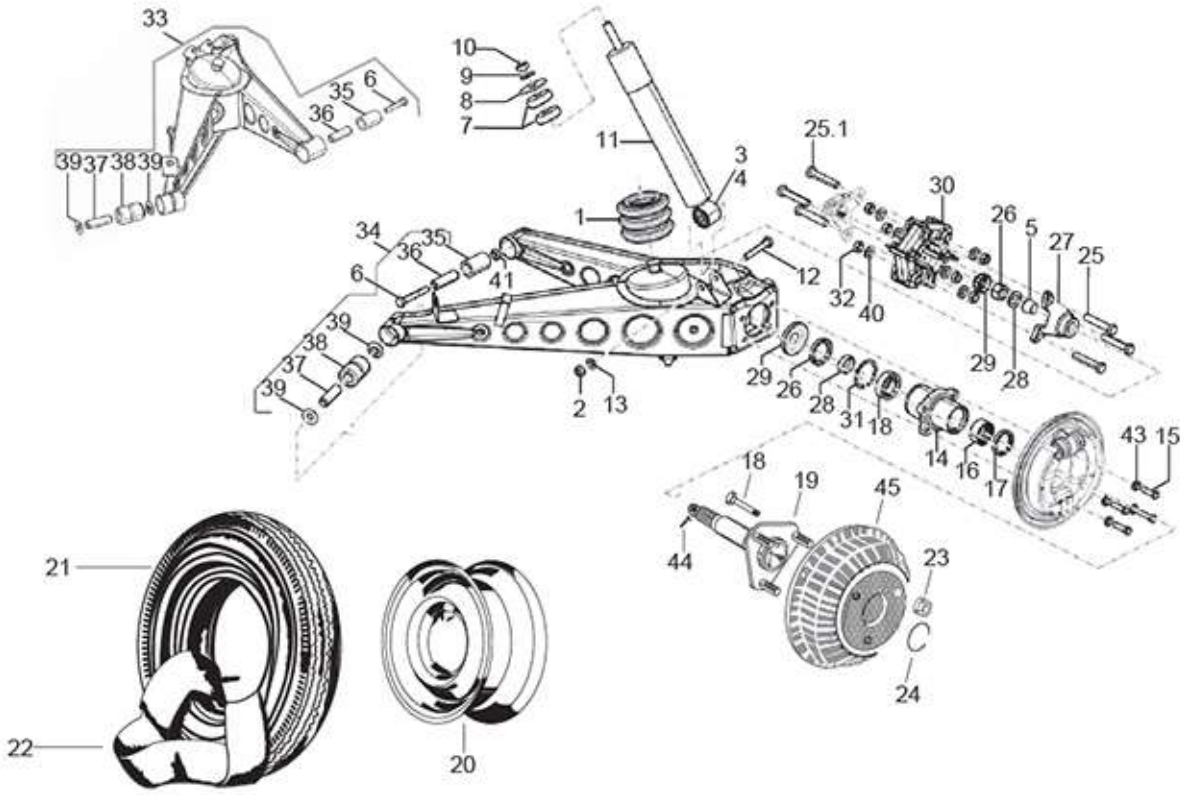
33
10
9
8
7
35
6
36
39 37 38 39
11
3
4
25.1
30
26
5
27
25
1
34
35
36
6
41
12
32
40
39
38
37
39
29
26
28
31
18
29
28
2
13
14
16
17
43
15
18
19
45
44
23
C
24
21
22
20

81

Print Date: 05-Oct-2022

PLATE-32
REAR SUSPENSION

Fig. No.	Part No.	Description	Qty	Remarks
35	226662	RING FOR ELASTIC SUPPORT	2	
36	226661	INTERNAL BUSH	2	
37	267065	SPACER FRONT	2	
38	226596	BUSH FRONT RING FOR ELASTIC SUPPORT	2	
39	661266	SHOULDER WASHER	4	
40	237246	SHIM WASHER 20X10.2X1	12	
41	231370	SELF BREAKING NUT M10	4	
42	3068	PLAIN WASHER	1	
43	016408	SPRING WASHER	8	
44	12790	SPLIT PIN	2	
45	152580	BRAKE DRUM APE - 501	2	
46	286328	PLAIN WASHER 20X10.2X2	2	NI

82

Print Date: 05-Oct-2022

PLATE-33

STEERING COLUMN AND FRONT SUSPENSION

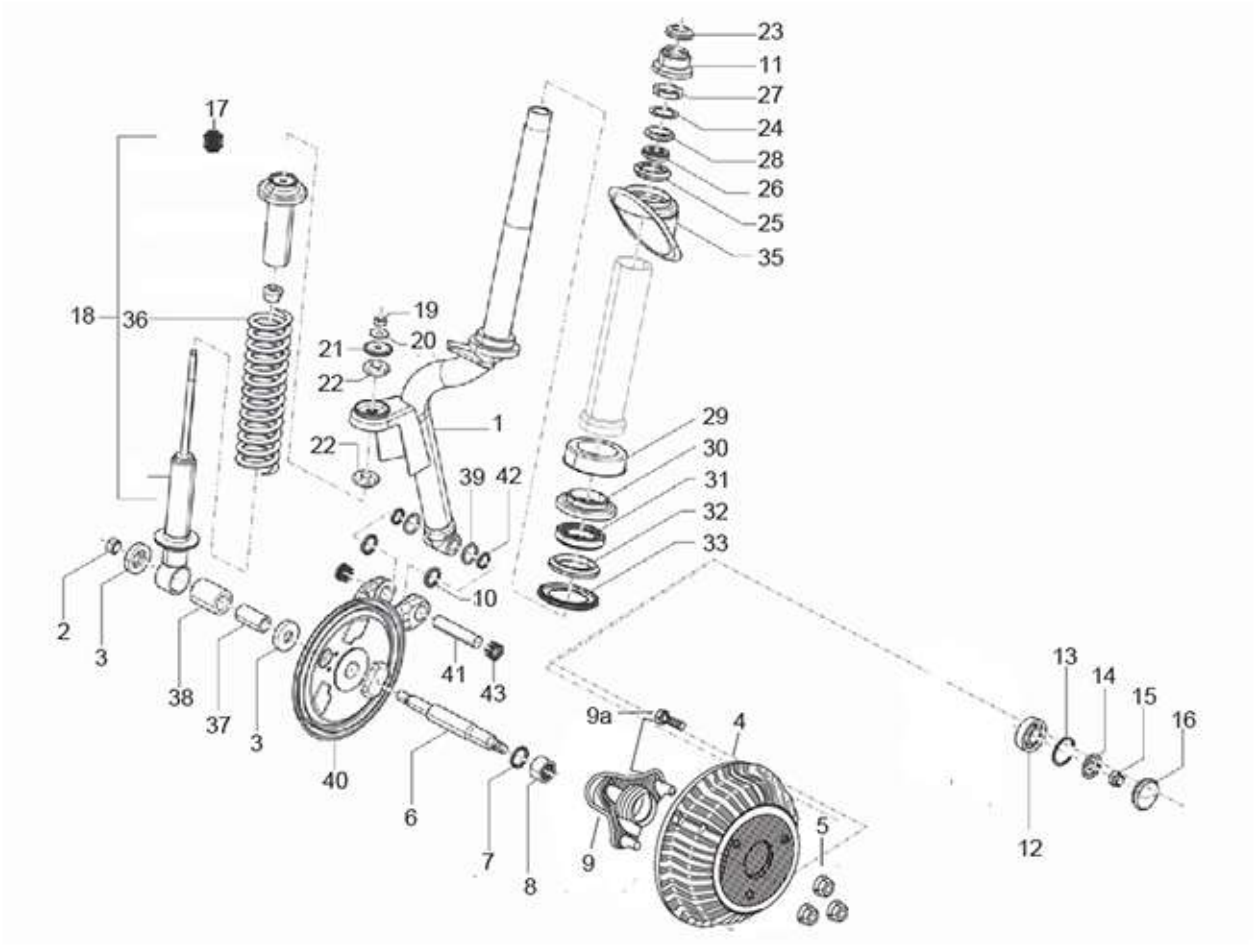
23
11
27
24
28
26
25
35
17
18
36
19
20
21
22
1
22
29
30
31
32
33
39
42
10
2
3
38
37
3
41
43
40
6
7
8
9a
9
4
5
13
14
15
16
12

83

Print Date: 05-Oct-2022

PLATE-33

STEERING COLUMN AND FRONT SUSPENSION

Fig. No.	Part No.	Description	Qty	Remarks
1	B076859	STEERING COLUMN WITH I.P. (501 STD)	1	
1	B076873SP	STEERING COLUMN ASSLY (NRB) -501 STD SPD	1	Stee. Column with Bkt.wheel carrier.
2	568095	NYLOCK NUT	1	
3	87067	PLAIN WASHER 30.5X14.3X2	1	
4	152580	BRAKE DRUM APE - 501	1	
5	660931	WHEEL NUT (M12 X 1.5)	3	
6	643772R	FRONT WHEEL AXLE	1	
7	136434	OIL SEAL	1	
8	125289	NEEDLE BEARING, CRANKASE, FRONT WHEEL	1	
9	652521	FR. WHEEL HUB ASSY.	1	
9A	652520	BOLT FOR AXLE M12 X 40 (VE WHEEL RIM)	4	
10	150579	RING FOR HOLDING TYPE J F101 17A	2	
11	604758	PROTECTION	1	
12	30209R	BALL BEARING FRONT WHEEL HUB	1	
13	567473	CIRCLIP DIA. 42 INT. (841004203)	1	
14	180431	COIN WASHER	1	
15	74521	NUT M14 X 1.5	1	
16	107871	CAP	1	
17	75708	SILENT BLOCK	1	
18	569246R	FRONT SHOCK ABSORBER	1	
19	20110	HEX NUT M10	1	
20	16410	SPRING WASHER	10	
21	6066	PL WASHER 10.5X38X9	1	
23	604758	PROTECTION	1	
24	108873	STOP WASHER FOR HOLDING	1	
25	567990	BEARING RACE UPPER BOTTOM	1	
26	567991	BEARING RACE UPPER TOP	1	
27	108874	SECURING RING NUT	1	
28	6C000190	UPPER BALL CAGE (VE)	1	
29	109064	DUST COVER	1	
30	567992	BEARING RACE LOWER TOP	1	
31	6C000191	LOWER BALL CAGE (VE)	1	
32	567993	BEARING RACE LOWER BOTTOM	1	
33	109066	WASHER WITH PROTECTION FOR BEARING	1	
34	604759	RUBBER CAP STEERING COLUMN (N.I.)	4	

84

Print Date: 05-Oct-2022

PLATE-33

STEERING COLUMN AND FRONT SUSPENSION

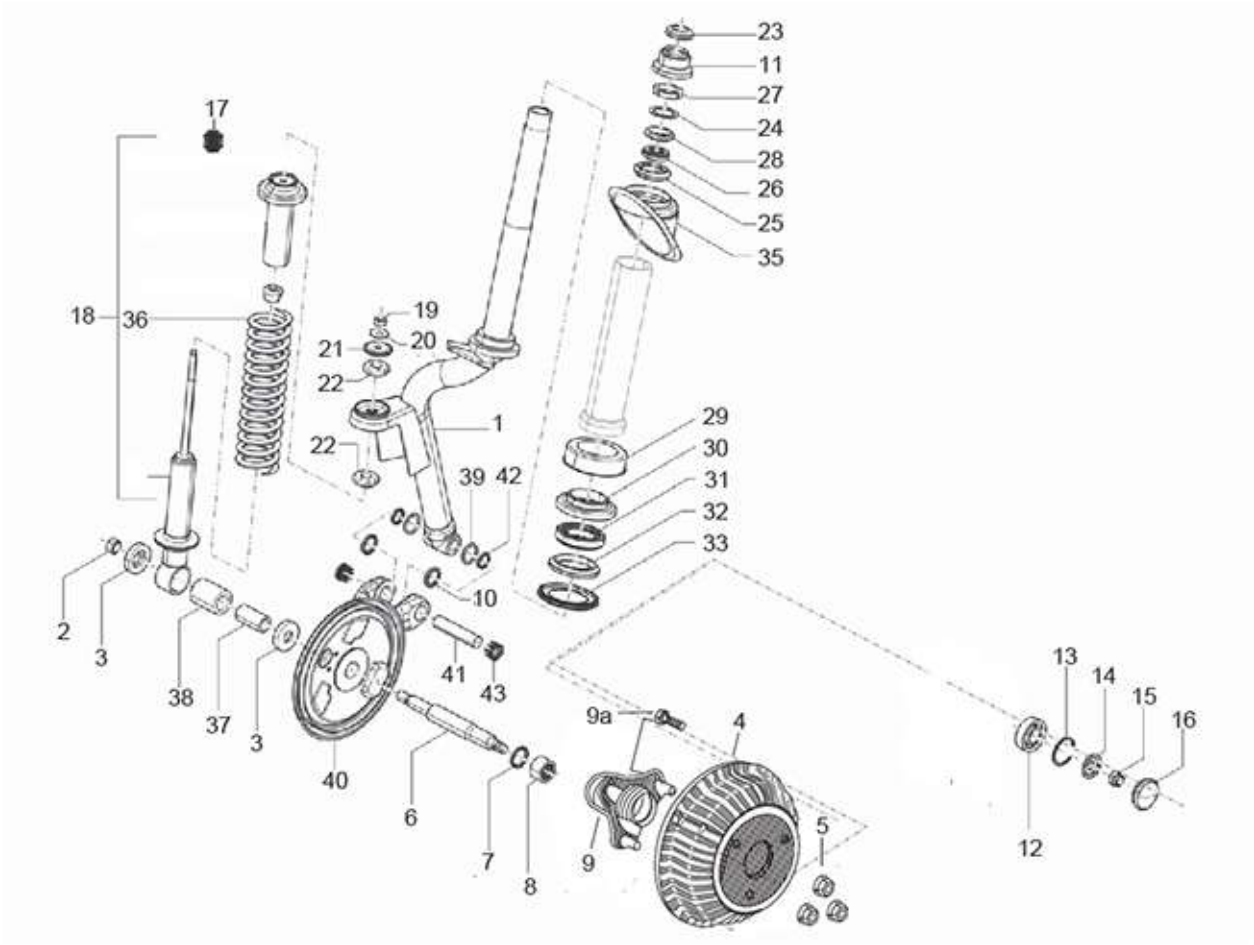
23
11
27
24
28
26
25
35
17
18
36
19
20
21
22
1
22
29
30
31
32
33
39
42
10
2
3
38
37
3
41
43
40
6
7
8
9
9a
4
5
13
14
15
16
12

85

Print Date: 05-Oct-2022

PLATE-33

STEERING COLUMN AND FRONT SUSPENSION

Fig. No.	Part No.	Description	Qty	Remarks
35	109265	SPLASH GUARD DUST COVER	1	
36	569255	FRONT SUSPENSION SPRING	1	
37	109117	RUBBER BUSH (FRT SHOCK ABSORBER) / RING	1	
38	566545	RUBBER BUSH (FRT SHOCK ABSORBER) - MODIFIED	1	
39	6733	O RING	2	
40	616541	BRACKET WHEEL CARRIER WITH PI	1	
41	137235	STEERING PIN	1	
42	8771	OIL SEAL (18-24-4)	2	
43	107718	ROLLER BUSH	2	

86

Print Date: 05-Oct-2022

PLATE-34
HANDLE BAR AND CONTROL

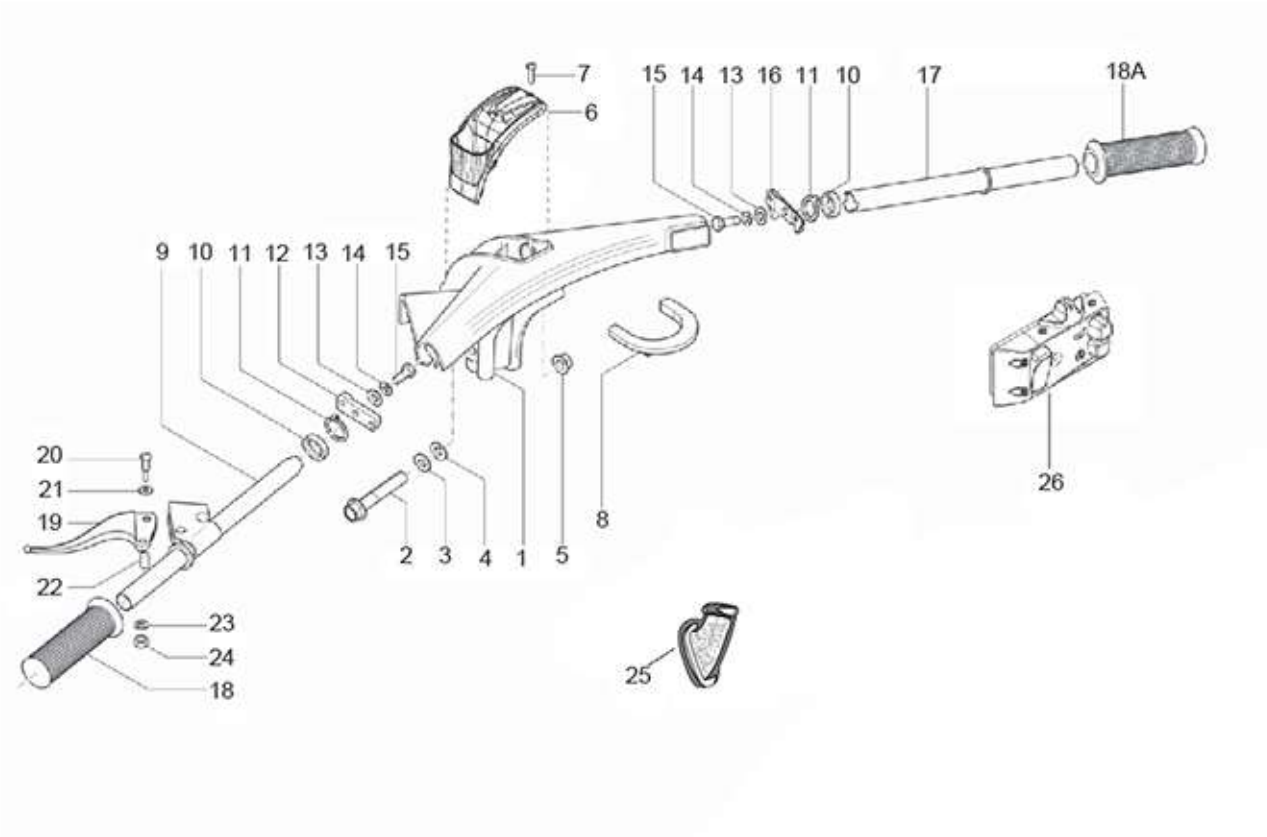
7
6
15
14
13
16
11
10
17
18A
9
10
11
12
13
14
15
20
21
19
22
23
24
18
2
3
4
1
5
8
25
26

87

Print Date: 05-Oct-2022

PLATE-34

HANDLE BAR AND CONTROL

Fig. No.	Part No.	Description	Qty	Remarks
1	B075687ED	HANDLE BAR BODY-ED	1	Modified Part
2	30104	MOUNTING BOLT M10 X 75	1	
3	16626	PLAIN WASHER (18X10.5X2)	2	
4	16410	SPRING WASHER	1	
5	20110	HEX NUT M10	1	
6	B073817	COVER	1	
7	632158	CSK HEAD SCREW	1	
8	126902	PROTECTION COLLAR CABLE	1	
9	B078029	TUBE SUB ASSLY. GEAR CONTROL	1	
9	6A000197	TUBE SUB ASSY WITH PARTS MODI	1	chassis cut off MBX0005AFXD843185
9A	B075313	SCREW FOR CLUTCH LEVER (NEW)	1	chassis cut off MBX0005AFXD843185
10	109404	WASHER OF RABBET(41737)	1	
11	60565	SPRING WASHER	1	
12	109775	GEAR CONTROL LEVER S/A	1	
13	3055	PLAIN WASHER M5	2	
14	016406	SPRING WASHER	2	
15	31089	HEX HEAD SCREW M6X18 CL 8.8	2	
16	109635	THROTTLE CONTROL LEVER WITH IP	1	
17	587902	ACCELERATOR TUBE ASSY.	1	
18	B073848	HANDLE BAR GRIP - LH	2	
18 A	B073849	HANDLE BAR GRIP - RH	1	
19	164906	CLUTCH CONTROL LEVER	1	
20	B075313	SCREW FOR CLUTCH LEVER (NEW)	1	
21	16319	BENT SPRING WASHER	1	
22	125181	SPACER	1	
23	16620	PLAIN WASHER	1	
24	12138	NYLOCK NUT M6	1	
25	109227	PROTECTION GROMMET	1	
26	B073850R	HBS (ST. BUTTON) - CITY UPGRADE (NEW) _ALL NUOVO MODEL	1	

88

Print Date: 05-Oct-2022

PLATE-35

BRAKE - TANDEM MASTER CYLINDER ,BRAKE PIPE AND HAND BRAKES

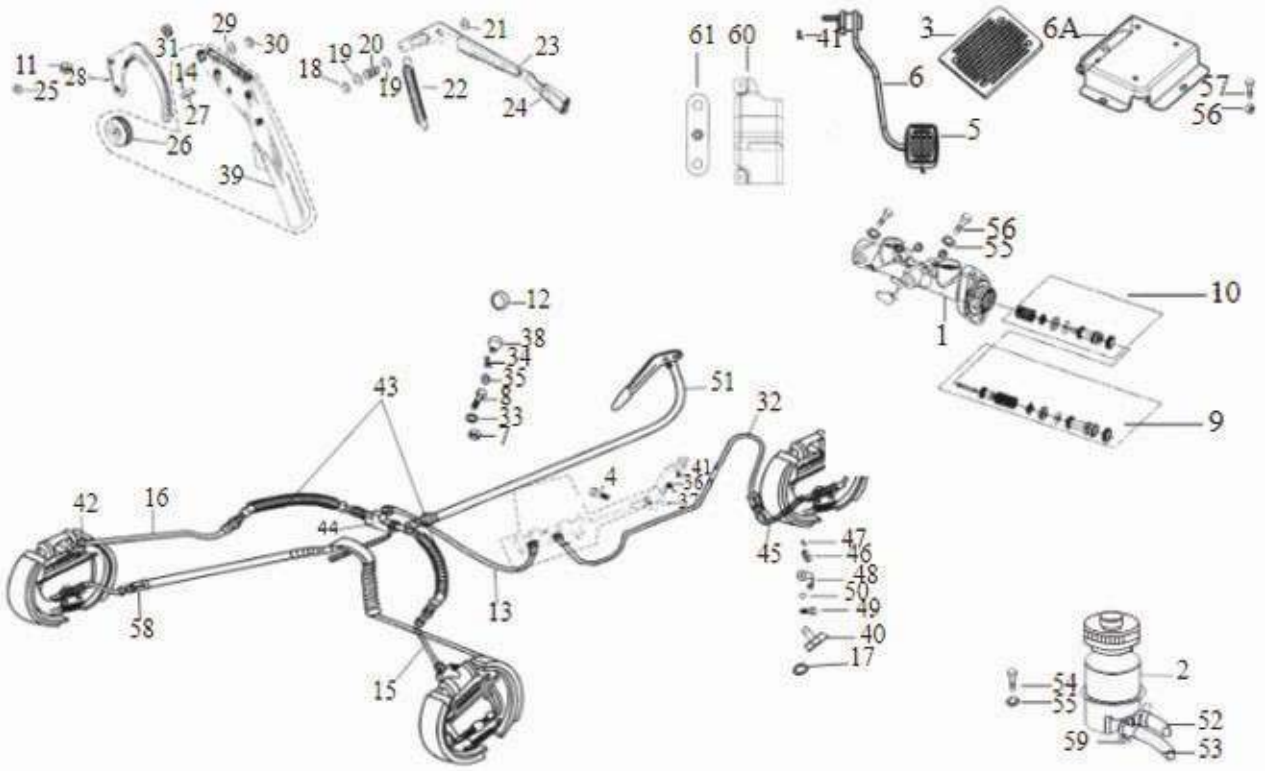
11
25
28
29
31
30
14
27
26
39
18
19
20
19
21
22
23
24
61
60
41
3
6A
6
5
57
56
56
55
10
1
12
38
34
35
8
33
7
43
51
32
9
4
41
36
37
42
16
44
45
47
46
48
50
49
40
17
58
13
15
2
54
55
52
59
53

89

Print Date: 05-Oct-2022

PLATE-35

BRAKE - TANDEM MASTER CYLINDER ,BRAKE PIPE AND HAND BRAKES

Fig. No.	Part No.	Description	Qty	Remarks
1	B075485	TMC ASSY.(19.05)	1	
2	B073788	BRAKE OIL TANK	1	
3	B074024	RUBBER MAT FOR FOOT REST	1	
4	652001	PIN	1	
5	567461	RUBBER PROTECTION FOR PEDAL	1	
6	B076847	BRAKE PEDAL ASSLY	2	
6	6C000118	FOOT BRAKE PEDAL	1	Applicable for W/o foot rest vehicle
6A	B073538	FOOT REST	1	
7	20108	HEX NUT M8	2	
8	1A016964	CSK PHILIPS HEAD SCREW	2	
9	940067	MAJOR KIT TMC (UG)	1	
10	940068	MINOR KIT TMC (UG)	1	
11	20106	HEX NUT M6	2	
12	B042693	CUP RETAINING SPRING (SPLIT TYPE)	2	
13	B075852	BRAKE TUBE FOR REAR WHEEL	1	
14	567920	SPLIT PIN	3	
15	644813	BRAKE PUMP TUBE OF LEFT REAR WHEEL	1	
16	644812	BRAKE PUMP TUBE OF RIGHT REAR WHEEL	1	
17	3055	PLAIN WASHER M5	1	
18	5969	CIRCLIP DIA 9 E TYPE	1	
19	6173	METALLIC PLAIN WASHER (808001026)	2	
20	108785	SPRING	1	
21	B042317	SPACER-RC LEVER	1	
22	567690	REVERSE GEAR COUPLING SPRING	1	
24	604717	KNOB FOR R.C.	1	NS
25	016406	SPRING WASHER	2	
26	B075475	PULLEY FOR HAND BRAKE	1	
27	567899	CLEVIS PIN	1	
28	B042794	RATCHET , HAND BRAKE CONTROL	1	
29	016408	SPRING WASHER	1	
30	6411	EXT CIRCLIP DIA 11	1	
31	20108	HEX NUT M8	1	
32	568161	TUBE BETWEEN TMC & FRT WHEEL	1	
33	016408	SPRING WASHER	2	
34	567920	SPLIT PIN	1	

90

Print Date: 05-Oct-2022

PLATE-35

BRAKE - TANDEM MASTER CYLINDER ,BRAKE PIPE AND HAND BRAKES

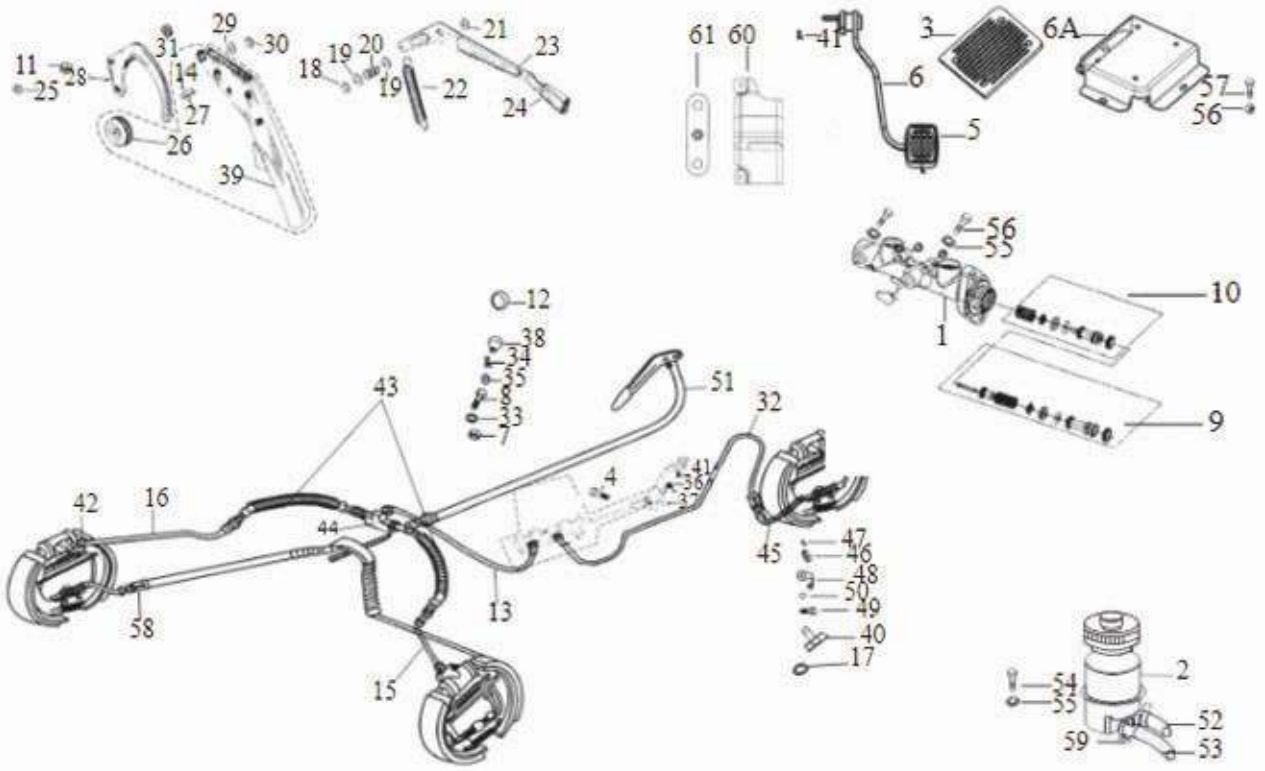
11
25
28
31
29
30
14
27
26
39
18
19
20
19
21
22
23
24
61
60
41
3
6A
6
5
57
56
56
55
1
10
9
12
38
34
35
8
33
7
43
51
32
4
41
36
37
42
16
44
45
47
46
48
50
49
40
17
13
58
15
2
54
55
52
59
53

91

Print Date: 05-Oct-2022

PLATE-35

BRAKE - TANDEM MASTER CYLINDER ,BRAKE PIPE AND HAND BRAKES

Fig. No.	Part No.	Description	Qty	Remarks
35	3058	PLAIN WASHER 15X8.4X1.5	1	
36	B073800	TORSIONAL SPRING	1	
37	229524	WASHER 21X14.3X2	1	
38	138237	CAP	1	
39	567746G1	HAND BRAKE LEVER (WITH POWDER COATING)	1	
40	632056	HEX NUT M6	1	
41	568737	SPLIT PIN 4 X 25 (821 0425 2 2)	2	
42	136916	PLATE FOR RETAINING THE BRAKE FLEX. PIPE	3	
43	644814R	FLEXIBLE BRAKE HOSE	2	
44	643692	THREE WAY UNION	1	
45	587624R	FLEXIBLE PIPING FOR FRONT WHEEL BRAKE R	1	
46	21216	HEX NUT M16 X 1.5	1	
47	48197	PL WASHER 24X16X1.5	13	
48	B003228	LOCK PLATE FRONT BRAKE HOSE	1	
49	661229	BANJO BOLT	1	
50	604910	COPPER WASHER FEED PUM	1	
51	B041774	PARKING BRAKE CABLE ASSY	1	
52	B075488	TUBE NO-1-BRAKE OIL TANK TO TMC	1	
53	B075489	TUBE NO-2 -BRAKE OIL TANK TO TMC	1	
55	013880	PLAIN WASHER	4	
56	20104	HEX NUT M4	4	
57	31088	HEX HD SCREW M6 X 16 CL 8.8 (811061623)	4	NS
58	B076007	PIPE CLIP 1 WAY	6	

92

Print Date: 05-Oct-2022

PLATE-36

PASSENGER BODY, HOOD FRAME & SEATS

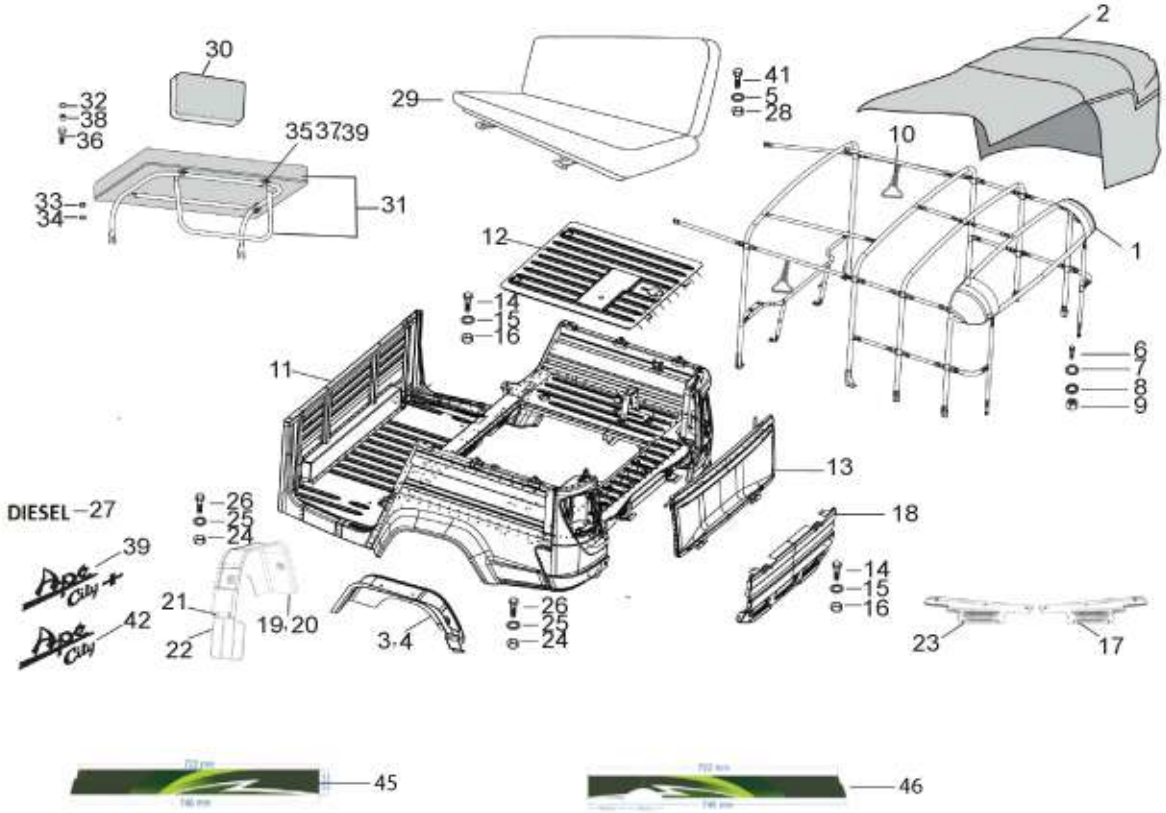
2
30
29
41
5
28
32
38
36
35 37 39
10
33
34
31
12
1
14
15
16
6
7
8
9
11
13
DIESEL 27
26
25
24
18
39
14
15
16
21
42
19 20
3 4
26
25
24
23
17
22
45
46

93

Print Date: 05-Oct-2022

PLATE-36

PASSENGER BODY, HOOD FRAME & SEATS

Fig. No.	Part No.	Description	Qty	Remarks
1	KIT96045R	KIT HOOD FRAME ASSLY PROFILE APE CITY PLUSE BSIV	1	
2	6B001360	SOFT TOP ASSLY GREEN -OPEN TYPE.(NON FR)	1	
2	B079214	SOFT TOP ASSLY YELLOW (APE CITY PLUS)	1	
2	B079215	SOFT TOP ASSEMBLY BLACK (APE CITY PLUS)	1	
3	B078477	COVER INNER MUDGUARD LH	1	SERVICEABLE ON 6B000753
4	B078478	COVER INNER MUDGUARD RH	1	SERVICEABLE ON 6B000754
5	016406	SPRING WASHER	2	
6	31088	HEX HD SCREW M6 X 16 CL 8.8 (811061623)	22	
7	3056	PLAIN WASHER M6 OD12	22	
8	016406	SPRING WASHER	22	
9	163205	HEX NUT	22	
10	B073598	HANDLE CANOPY STRAP	1	
11	B079094BW	PASS BODY APE CITY PLUS_BW	1	
11	B079094BY	PASS BODY APE CITY PLUS_BY	1	
11	B079094CB	PASS BODY APE CITY PLUS_CB	1	
11	B079094EG	PASS BODY APE CITY PLUS_EG	1	
11	B079094GY	PASS BODY APE CITY PLUS_GY	1	
11	B079094NB	PASS BODY APE CITY PLUS_NB	1	
11	B079094WR	PASS BODY APE CITY PLUS_WR	1	
12	660207ED	ENGINE INSPECTION DOOR 501 CNG/LPG	1	
13	B078256ED	TAIL GATE ASSY.	1	
14	645037	HEX HEAD SCREW M8 X 22 CL 8.8	2	
15	3058	PLAIN WASHER 15X8.4X1.5	2	
16	20108	HEX NUT M8	2	
17	B075985	FOOT STEP COVER LH	1	
18	B077970ED	ASSLY VISUAL BARRIER BSIV	1	
19	6B000753	INNER MUDGUARD LOWER LH ASSLY	1	
20	6B000754	INNER MUDGUARD LOWER RH ASSLY	1	
21	6B000751	INNER MUDGUARD LOWER LH	4	
22	6B000752	INNER MUDGUARD LOWER RH	2	
23	B075984	FOOT STEP COVER RH	1	
24	20106	HEX NUT M6	4	
25	013880	PLAIN WASHER	4	
26	D9165140620	BOLT WITH WASHER	4	
27	B076539	STICKER (DIESEL)	1	

94

Print Date: 05-Oct-2022

PLATE-36

PASSENGER BODY, HOOD FRAME & SEATS

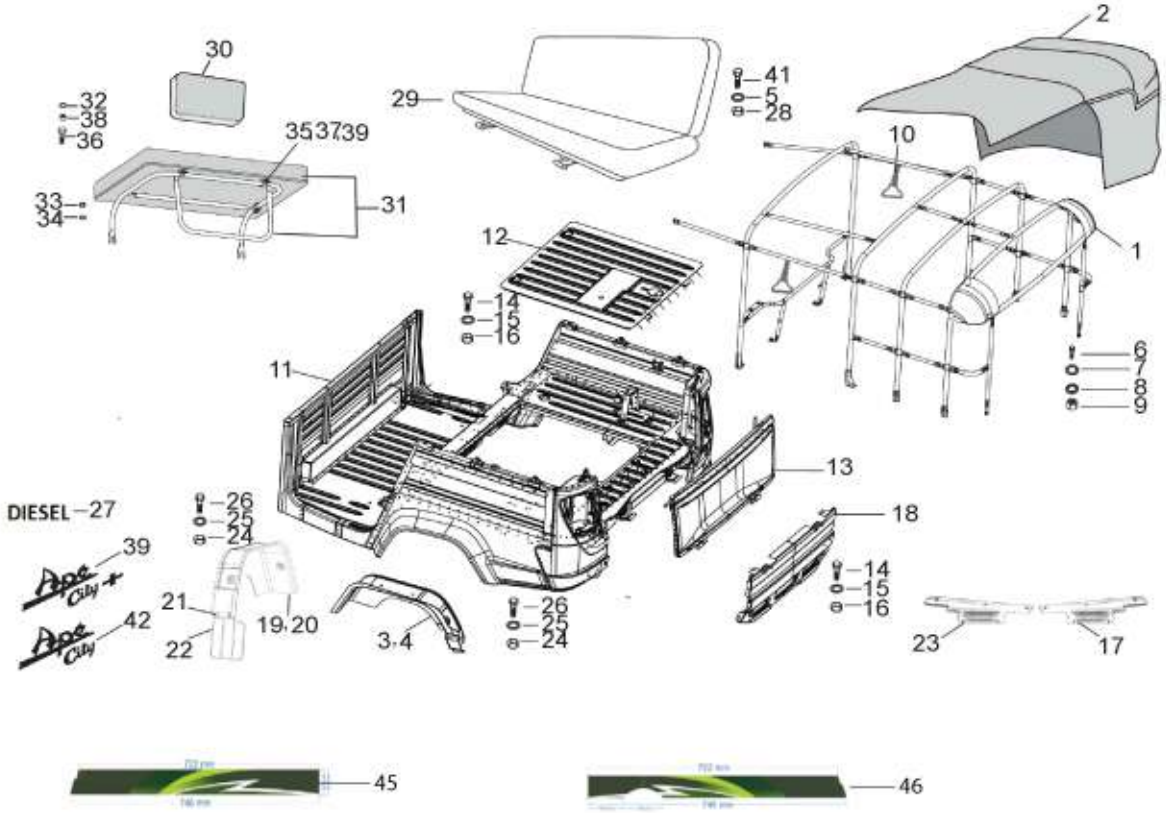
2
30
29
41
5
28
32
38
36
35 37 39
10
33
34
31
12
1
14
15
16
6
7
8
9
11
13
DIESEL 27
26
25
24
18
39
14
15
16
21
19 20
42
22
3 4
26
25
24
23
17
45
46

95

Print Date: 05-Oct-2022

PLATE-36

PASSENGER BODY, HOOD FRAME & SEATS

Fig. No.	Part No.	Description	Qty	Remarks
28	20106	HEX NUT M6	2	
29	B078320	PASSENGER SEAT ASSLY - MID BODY	1	
30	B074594	DRIVER BACK REST ASSY	1	
31	B075614	DRIVER SEAT ASSY COMPLETE	1	
32	013880	PLAIN WASHER	8	
33	16405	SPRING WASHER M5	8	
34	016408	SPRING WASHER	6	
35	3058	PLAIN WASHER 15X8.4X1.5	6	
36	31088	HEX HD SCREW M6 X 16 CL 8.8 (811061623)	4	
37	2383	PLAIN WASHER M20X8.5X2	4	
38	20108	HEX NUT M8	2	
39	31119	HEX HD SCREW M8 X 25	2	
40	B041584	STICKER FOR LPG	1	
41	B003652	PLATE PETROL	1	
42	B078874	APE CITY PLUS STICKER (FRONT PANEL)	1	
43	31116	HEX HD. SCREW M8X16	2	
44	B078924	APE CITY STICKER (TAILGATE)	1	
45	6B001309	APE CITY PLUS SIDE PANEL DECAL LH	1	
46	6B001310	APE CITY PLUS SIDE PANEL DECAL RH	1	

96

Print Date: 05-Oct-2022

PLATE-37
WIRING HARNESS

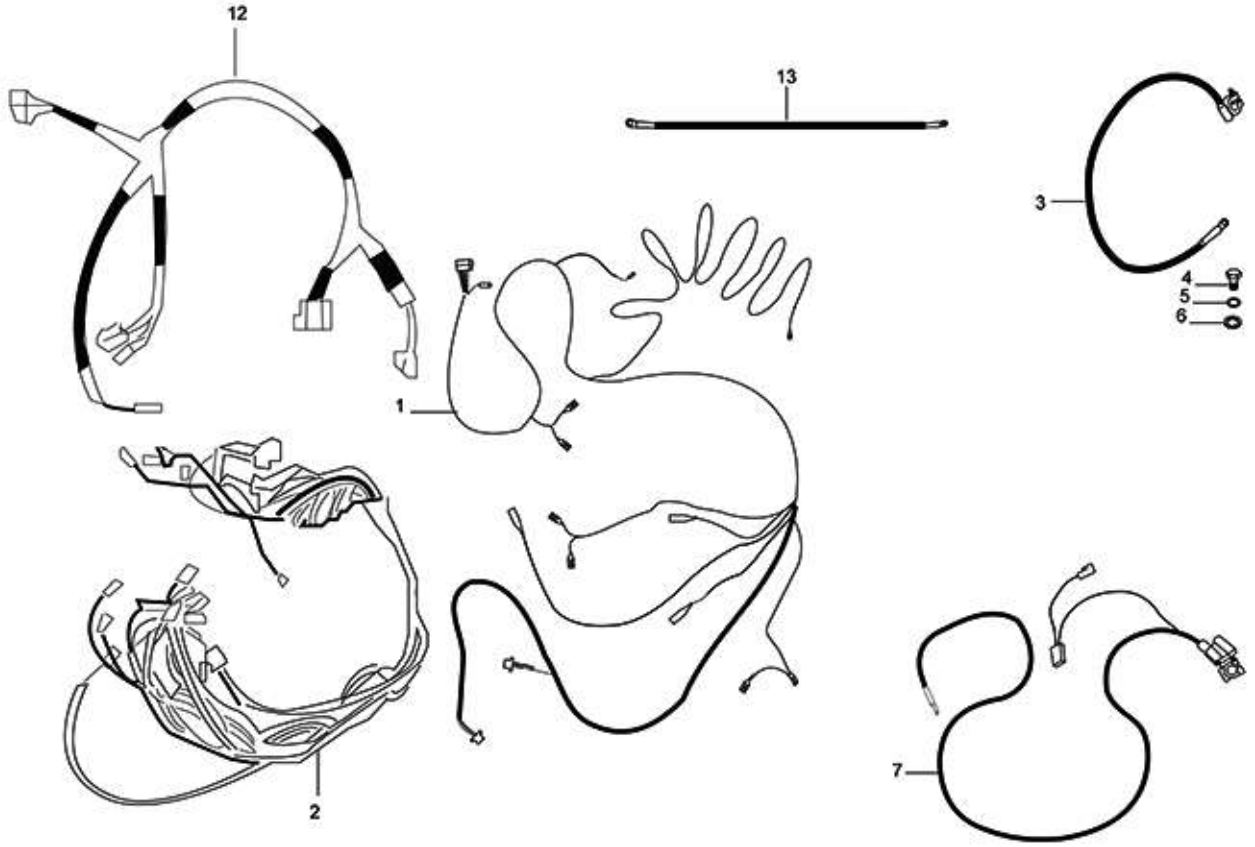
12
13
3
4
5
6
1
2
7

97

Print Date: 05-Oct-2022

PLATE-37
WIRING HARNESS

Fig. No.	Part No.	Description	Qty	Remarks
1	B079068	WHS MAIN_DIESEL (MID BODY)	1	
2	6D000335R	INST. PANEL_APE MID BODY (DSL)	1	
3	644838R	BATTERY CABLE -VE	1	
4	31088	HEX HD SCREW M6 X 16 CL 8.8 (811061623)	1	
5	3056	PLAIN WASHER M6 OD12	1	
6	016406	SPRING WASHER	1	
7	659791R	BATTERY CABLE POSITIVE (+) APE DELUX	1	
8	B003110R	PIG TAIL FUEL TANK	1	
9	B073320R	PIG TAIL- CABIN LAMP (NEW)-PASSENGER	1	
10	644839R	EARTHING CABLE	1	
11	B075108	ADAPTOR PIGTAIL -ACCESSORIES(3WH)	1	

98

Print Date: 05-Oct-2022

PLATE-38
FRONT BRAKE ASSEMBLY

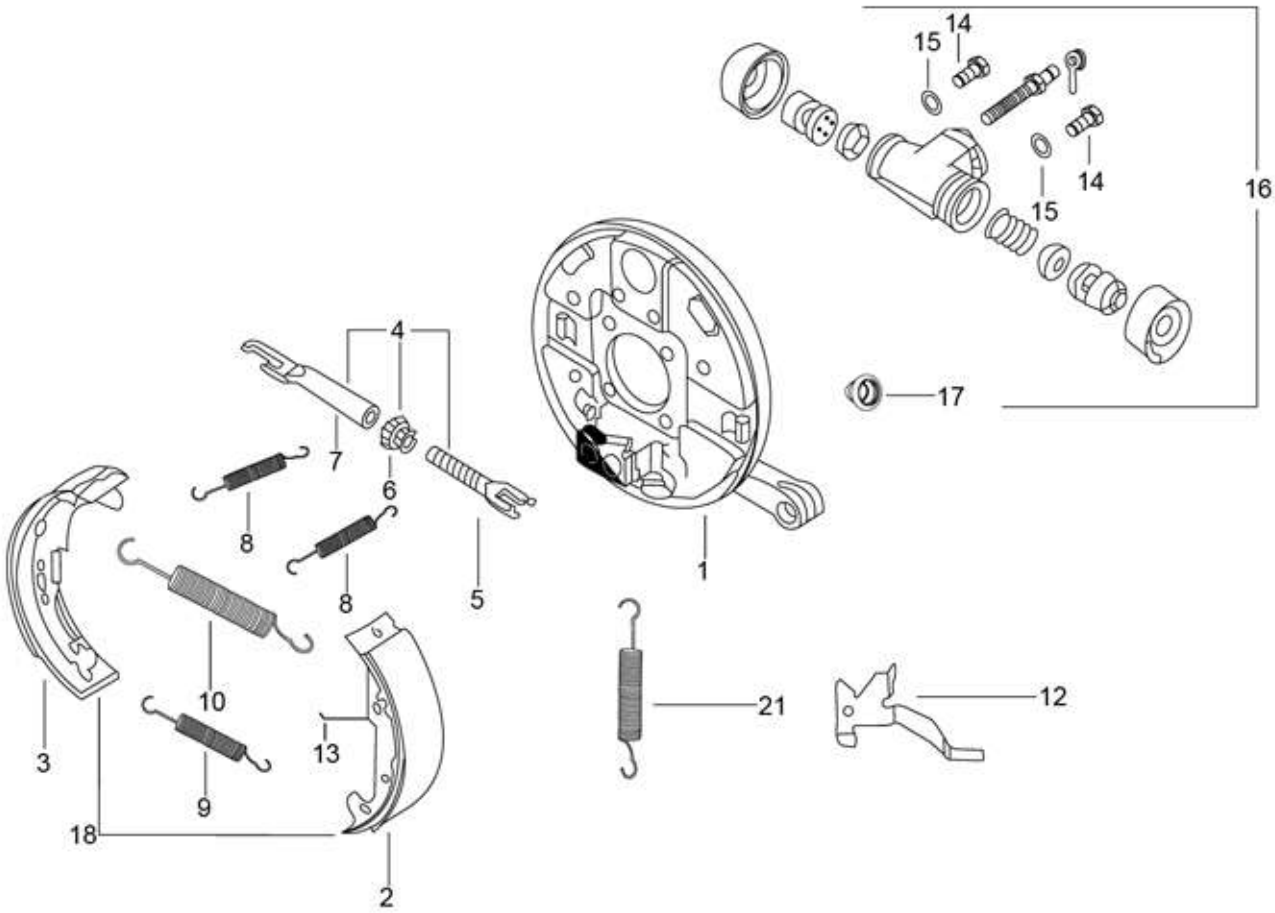
15
14
14
15
16
4
17
7
6
8
8
5
1
10
21
12
3
13
9
18
2

99

Print Date: 05-Oct-2022

PLATE-38

FRONT BRAKE ASSEMBLY

Fig. No.	Part No.	Description	Qty	Remarks
1	616541	BRACKET WHEEL CARRIER WITH PI	1	
2	B003784	LEADING SHOE COMP WITH PIN LH ANL 1643	1	
3	940004	FRONT BRAKE SHOE KIT COMPRISING OF 2 & 3	1	
4	179056	FORK ASSY LH	1	
5	178804	FORK FOR LH WHEEL	1	
6	178805	LH - GEAR	1	
7	178806	LH STRUT	1	
8	602497	JAWS STOP SPRINGS	2	
9	116088	SPRING SUPPORTING JAWS	1	
10	245038	SHOE RETURN SPRING	1	
11	178808	SPRING LEVER RETURN	1	
12	178807	LEVER LH	1	
13	178823	JUMPER LH	1	
13	178824	JUMPER	1	
14	63440	BOLT M6X12	2	
15	12536	SPRING WASHER	2	
16	587616	BRAKE CYLINDER FR ASSLY (DIA. 22.225)	1	
17	925501	CAP (KBX P 6450225)	1	
18	940004	FRONT BRAKE SHOE KIT COMPRISING OF 2 & 3	1	
19	925521	MINOR KIT WHEEL CYL. FRT (KBX 1007)	1	NI

100

Print Date: 05-Oct-2022

PLATE-39

REAR BRAKE ASSEMBLY

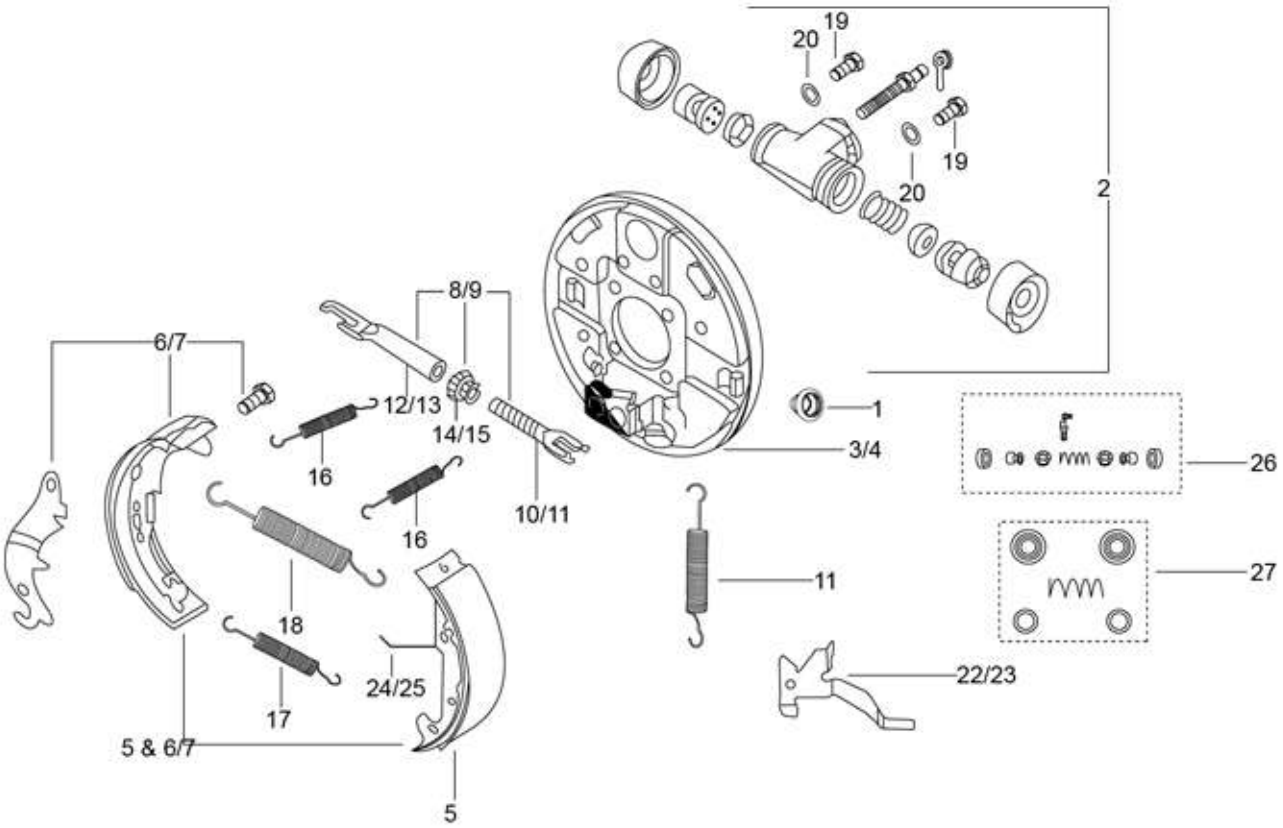
19
20
19
20
2
8/9
6/7
12/13
14/15
1
3/4
26
16
16
10/11
11
27
18
24/25
22/23
17
5 & 6/7
5

101

Print Date: 05-Oct-2022

PLATE-39

REAR BRAKE ASSEMBLY

Fig. No.	Part No.	Description	Qty	Remarks
1	925501	CAP (KBX P 6450225)	1	
2	632148	WHEEL CYLINDER ASSY. FRONT DIA. (25.4 MM)	1	
3	602120	LEFT BRAKE JAW HOLDING CABLE PLATE	1	
4	602123	RIGHT BRAKE JAW HOLDING CABLE PLATE	1	
5	B003784	LEADING SHOE COMP WITH PIN LH ANL 1643	1	
6	940005	REAR BRAKE SHOE SET L/H COMPRISING OF 5 & 7	1	
7	940006	REAR BRAKE SHOE SET R/H. COMPRISING OF 5 & 8	1	
8	179056	FORK ASSY LH	1	
9	179057	FORK ASSY. RH	1	
10	178804	FORK FOR LH WHEEL	1	
11	178818	RH FORK	1	
12	178806	LH STRUT	1	
13	178820	RH STRUT	1	
14	178805	LH - GEAR	1	
15	178819	RH GEAR	1	
16	602497	JAWS STOP SPRINGS	2	
17	116088	SPRING SUPPORTING JAWS	1	
18	245038	SHOE RETURN SPRING	1	
19	63440	BOLT M6X12	2	
20	12536	SPRING WASHER	2	
21	178808	SPRING LEVER RETURN	1	
22	178807	LEVER LH	1	
23	178821	LEVER RH	1	
24	178823	JUMPER LH	1	
25	178824	JUMPER	1	
28	940005	REAR BRAKE SHOE SET L/H COMPRISING OF 5 & 7	1	NI
29	940006	REAR BRAKE SHOE SET R/H. COMPRISING OF 5 & 8	1	NI

102

Print Date: 05-Oct-2022

PLATE-40
TOOLS & ACCESSORIES

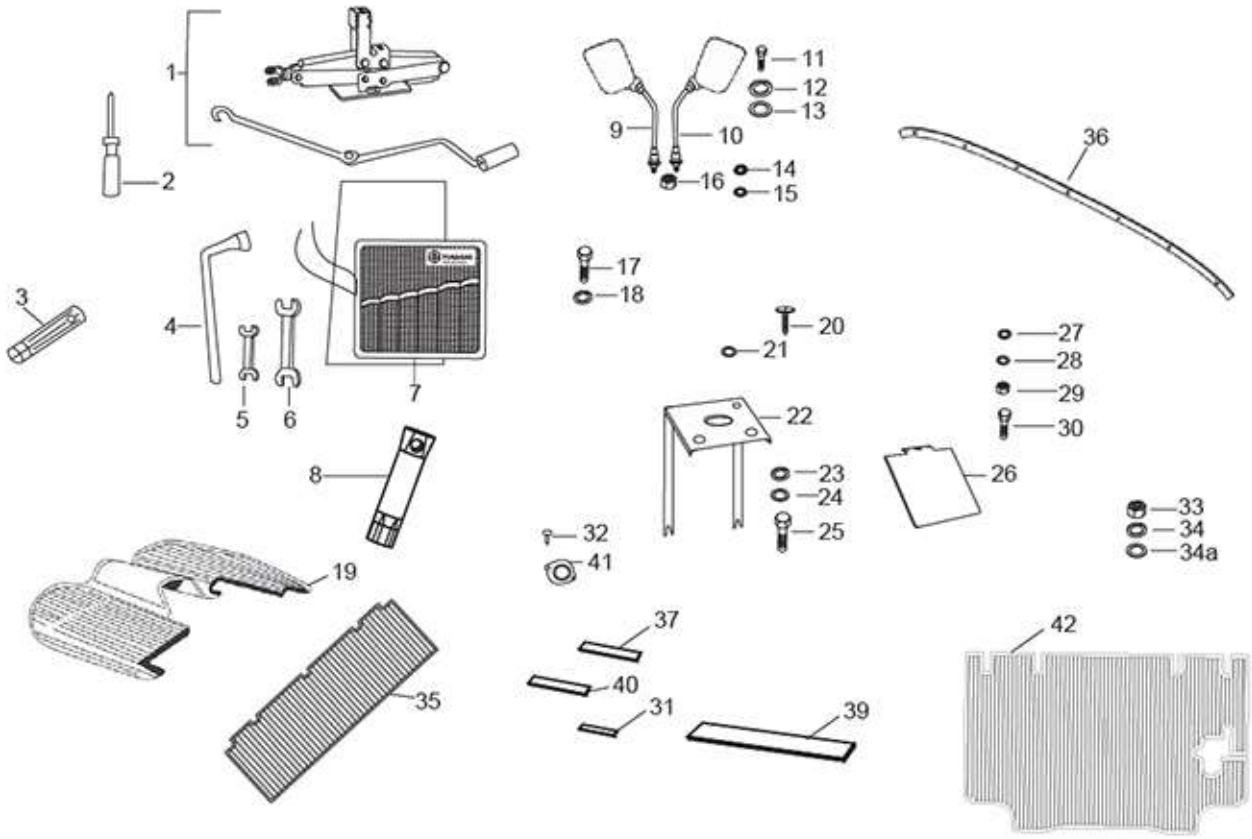
1
2
3
4
5
6
7
8
9
10
11
12
13
14
15
16
17
18
19
20
21
22
23
24
25
26
27
28
29
30
31
32
33
34
34a
35
36
37
39
40
41
42

103

Print Date: 05-Oct-2022

PLATE-40
TOOLS & ACCESSORIES

Fig. No.	Part No.	Description	Qty	Remarks
1	B076650R	JACK ASSLY	1	
2	567458	SCREW DRIVER (-)&(+) 80	1	
3	B041787	SPARK PLUG SPANNER	1	
4	567459	L TYPE WHEEL SPANNER (A/F19)	1	
5	567454	DOUBLE END SPANNER7/8	1	
6	567456	DOUBLE END SPANNER 12/14	1	
7	604707	TOOL BAG	1	
8	B041787	SPARK PLUG SPANNER	1	not applicable for DSL
9	B078716	OUTER REAR VIEW MIRROR LH ASSLY	1	
10	B078715	OUTER REAR-VIEW MIRROR RH ASSLY.	1	
11	31118	SCREW M8X20	2	
12	016408	SPRING WASHER	6	
13	3058	PLAIN WASHER 15X8.4X1.5	20	
14	016408	SPRING WASHER	4	
15	3058	PLAIN WASHER 15X8.4X1.5	4	
16	20108	HEX NUT M8	4	
17	31116	HEX HD. SCREW M8X16	1	
18	016408	SPRING WASHER	1	
19	B074219	FRONT CARPET (DLS)	1	
20	15911	PAN SELF TAP SCREW 8SG X 16 AB	1	
21	16670	PLAIN WASHER 12X4.5X1	1	
22	B075580	BRACKET S/A FAREMETER	1	
23	016408	SPRING WASHER	4	
24	3058	PLAIN WASHER 15X8.4X1.5	4	
25	31118	SCREW M8X20	4	
26	643661	LICENSE PLATE MTG. BKT.	1	
27	13861	PLAIN WASHER 20X8.2X2.5	2	
28	12540	SPRING WASHER M8	2	
29	20108	HEX NUT M8	2	
30	30072	HEX HEAD BOLT M8 X 35	2	
31	B074637	BEEDING DOME SIDE PILLAR (PET/DLS)	2	
32	8451	PAN SELF TP SCREW 6 SGX13 AB	4	
33	20106	HEX NUT M6	12	
34	016406	SPRING WASHER	12	
34a	013880	PLAIN WASHER	12	

104

Print Date: 05-Oct-2022

PLATE-40
TOOLS & ACCESSORIES

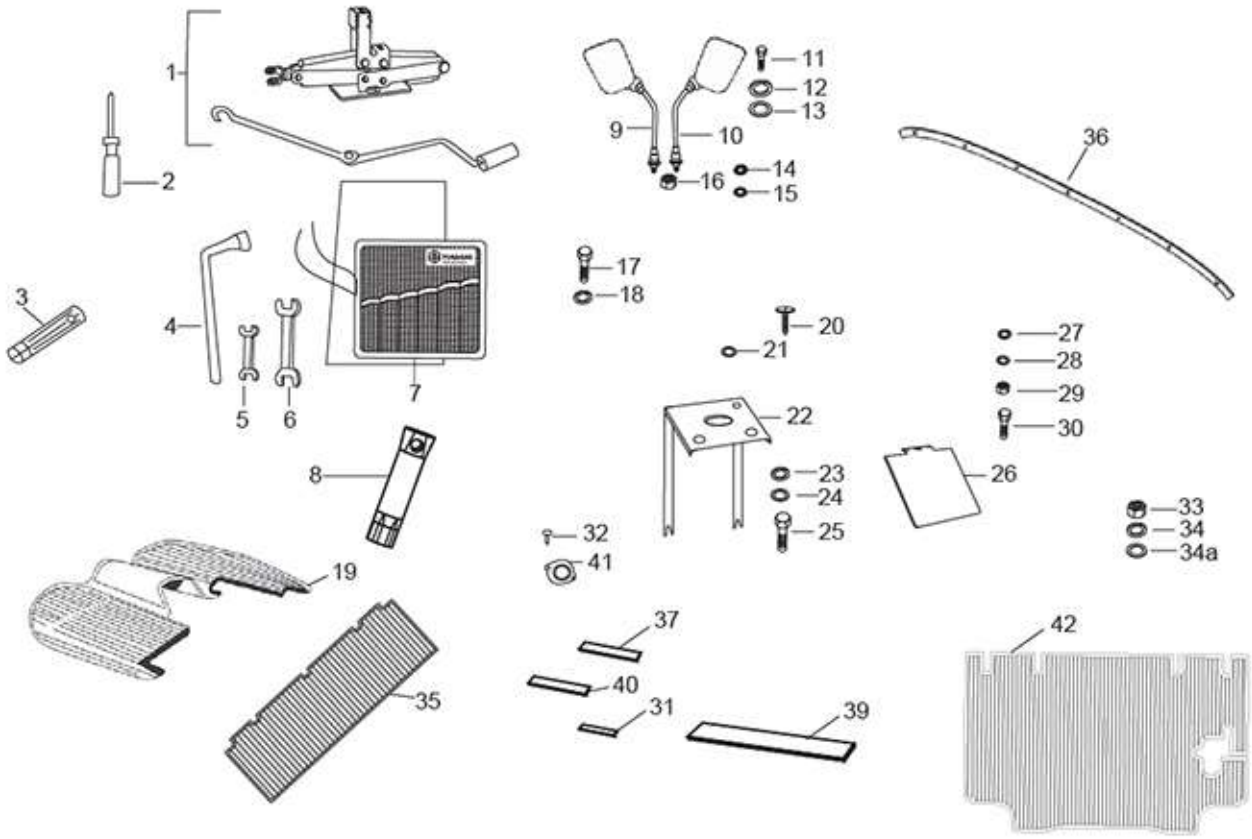
1
2
3
4
5
6
7
8
9
10
11
12
13
14
15
16
17
18
19
20
21
22
23
24
25
26
27
28
29
30
31
32
33
34
34a
35
36
37
39
40
41
42

105

Print Date: 05-Oct-2022

PLATE-40
TOOLS & ACCESSORIES

Fig. No.	Part No.	Description	Qty	Remarks
35	B041225	CARPET PASSENGER FOOT REST	1	
36	B073603	UPPER STRIP CANPOY MTG	1	
37	B024474	BEADDING LINING	2	
38	B078316	LATERAL PROFILE	2	
39	B006792	BEADING (INSULATION ENG. COMP. COVER)	2	
40	B074637	BEEDING DOME SIDE PILLAR (PET/DLS)	2	
41	B003076	COVER SHOCKER MTG. HOLE	2	NI
42	6B000401	PASSENGER REAR CARPET-PTL/DLS	1	

106

Print Date: 05-Oct-2022

PLATE-41
CABLES

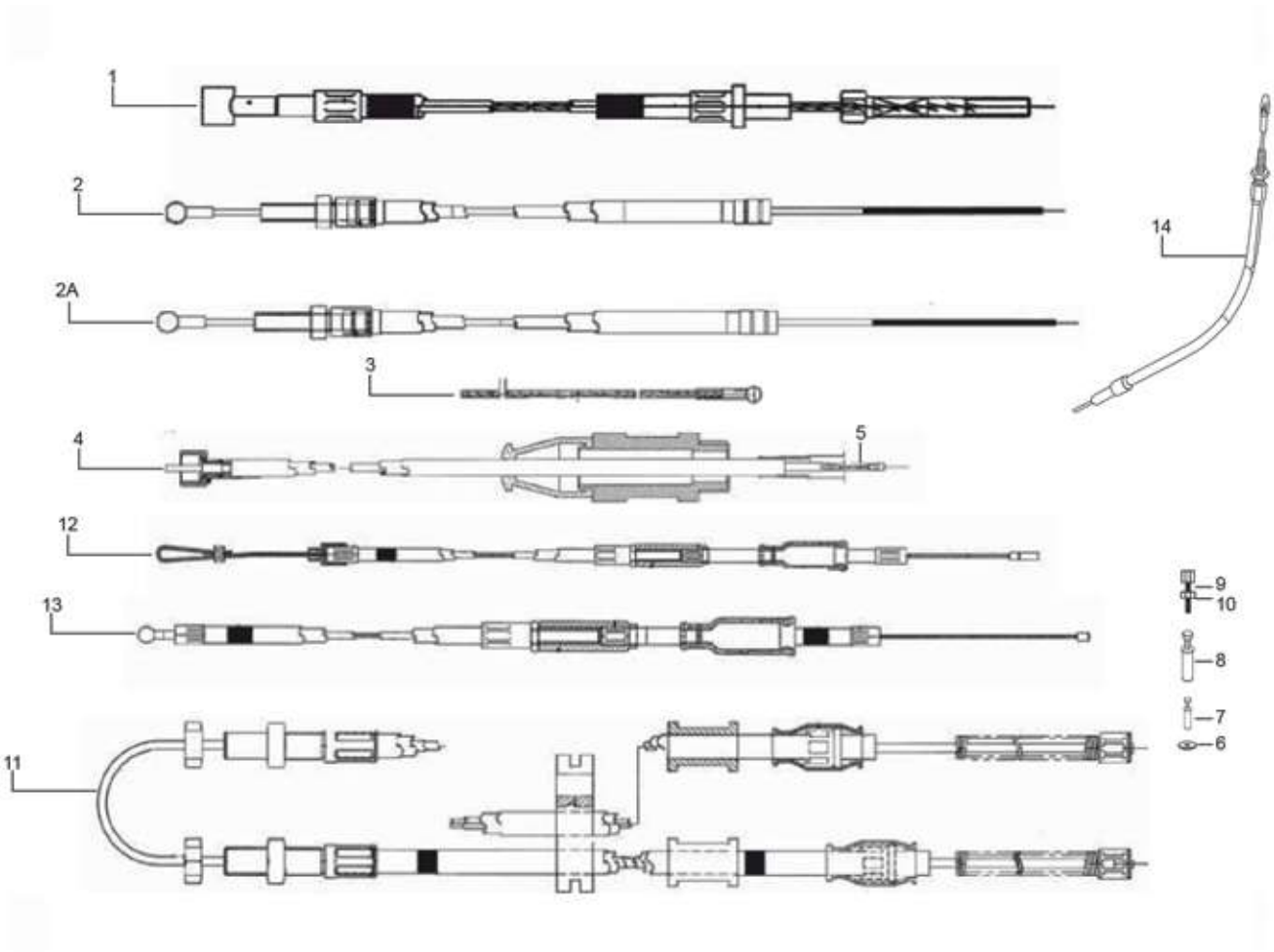
1
2
2A
3
4
5
12
13
11
14
9
10
8
7
6

107

Print Date: 05-Oct-2022

PLATE-41
CABLES

Fig. No.	Part No.	Description	Qty	Remarks
1	B076807R	CLUTCH CONTROL TRANS. ASSY 501 PASS	1	For OLD Clutch PASS./PU
1	6A001046R	CLUTCH CONTROL TRANSMISSION ASSLY.	1	For Aluminium Clutch PASS./PU
1	B076808R	CLUTCH CONTROL TRANSMISSION ASSLY. 501 LD	1	For OLD Clutch LDX / LDX+
1	6A001047R	CLUTCH CONTROL TRANSMISSION ASS	1	For Aluminium Clutch LDX / LDX+
2	B076329	CABLE, GEAR CONTROL ASSLY (BLACK)	1	
2A	B076330	CABLE,GEAR CONTROL ASSLY NO.2(WHITE)	1	
3	587803	WIRE, GEAR CONTROL WITH TERMINAL	1	
4	645124	SPEEDO CABLE	1	
5	587812	TRANSMISSION CABLE (INNER) FOR ODOMETER	1	Inner
6	NS	NOT SERVICEABLE	1	NS
7	120250014	SCREW TERMINAL	1	
8	604560	SCREW TERMINAL ASSY. - GEAR CONTROL	2	
9	197071	ADJUSTER SCREW M6	2	
10	20106	HEX NUT M6	2	
11	B041774	PARKING BRAKE CABLE ASSY	1	
12	604515	ENGINE STOP CONTROL TRANSMISSION ASSLY	1	
13	B073470R	ACCELERATOR CABLE WITH JONT (NEW)	1	
14	587633	CABLE, REVERSE GEAR CONTROL ASSY.	1	
14.1	587822	CABLE, REVERSE GEAR WITH TERMINALS.	1	

108

Print Date: 05-Oct-2022

PLATE-18.1
FUEL TANK ASSEMBLY

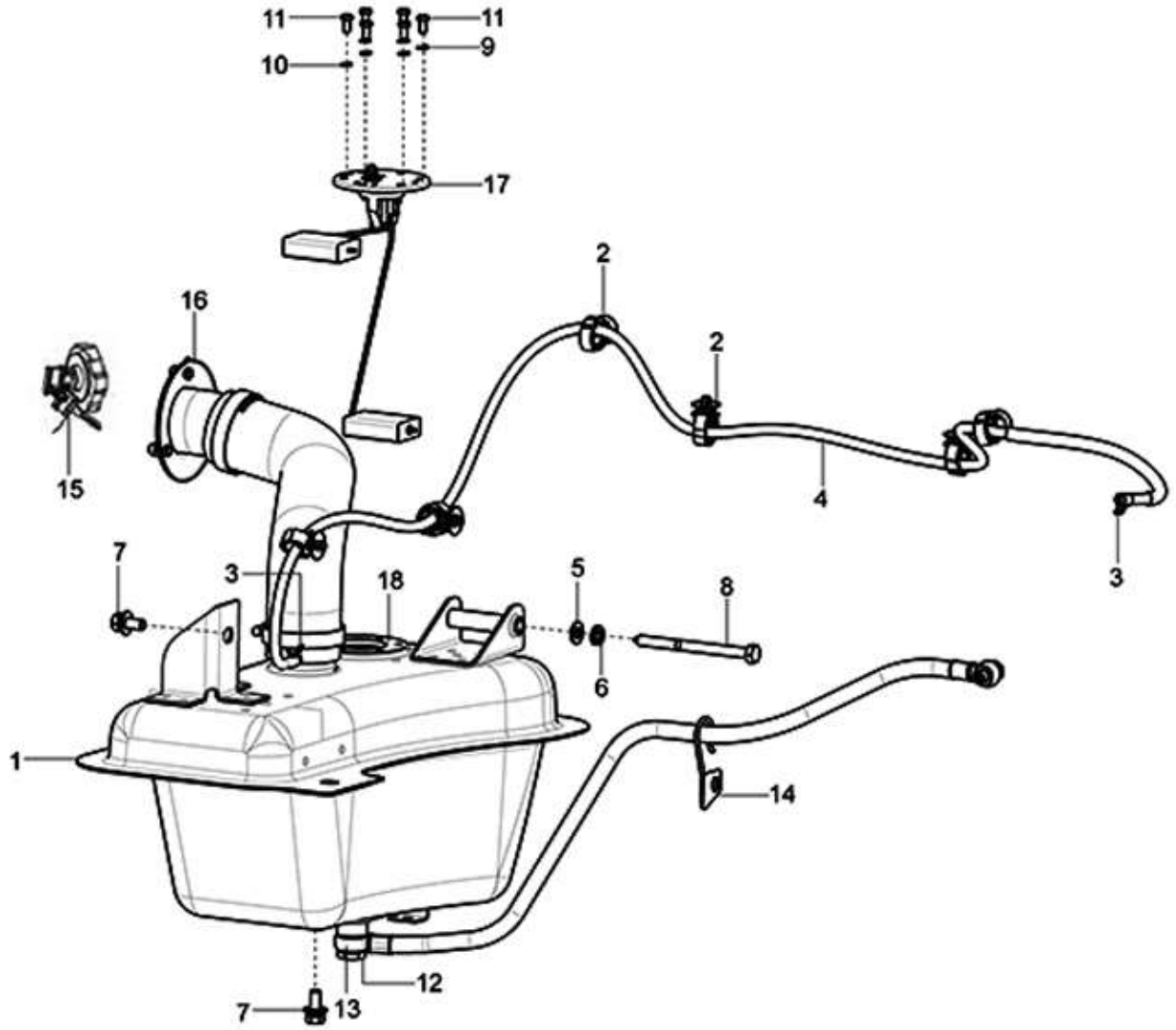
11
11
9
10
17
2
16
2
15
4
3
7
3
18
5
8
6
1
14
12
7
13

109

Print Date: 05-Oct-2022

PLATE-18.1

FUEL TANK ASSEMBLY

Fig. No.	Part No.	Description	Qty	Remarks
1	6A000086	ASSY FUEL TANK	1	
2	B076007	PIPE CLIP 1 WAY	6	
3	B003282	HOSE CLIP (DIA.7) (PETROL & CNG/LPG)	2	
4	B079063	FUEL RETURN HOSE (MIDBODY BSIV)	1	
5	808000826	PLAIN WASHER M8	1	
6	016408	SPRING WASHER	1	
7	645036	HEX HEAD SCREW M8 X 20 CL 8.8 W/SP, PL	2	
8	6A000143	HEX HEADED SCREW WITH PARTIALLY THREDED	1	
9	3055	PLAIN WASHER M5	3	
10	16405	SPRING WASHER M5	3	
11	568713	DOME NUT	3	
12	224644	COPPER WASHER M10	2	
13	604909	BANJO BOLT (M14X1.5)	1	
14	6A000617	BRACKET ASSY, FUEL LINE	1	
15	B024170	DIESEL TANK CAP WITH KEY	1	
16	644299	COLLAR	1	
17	6D000010	TANK UNIT	1	
18	925888	RUBBER GASKET FOR TANK UNIT	1	

110

Print Date: 05-Oct-2022

PLATE-24.1
ALUMINIUM CLUTCH ASSEMBLY

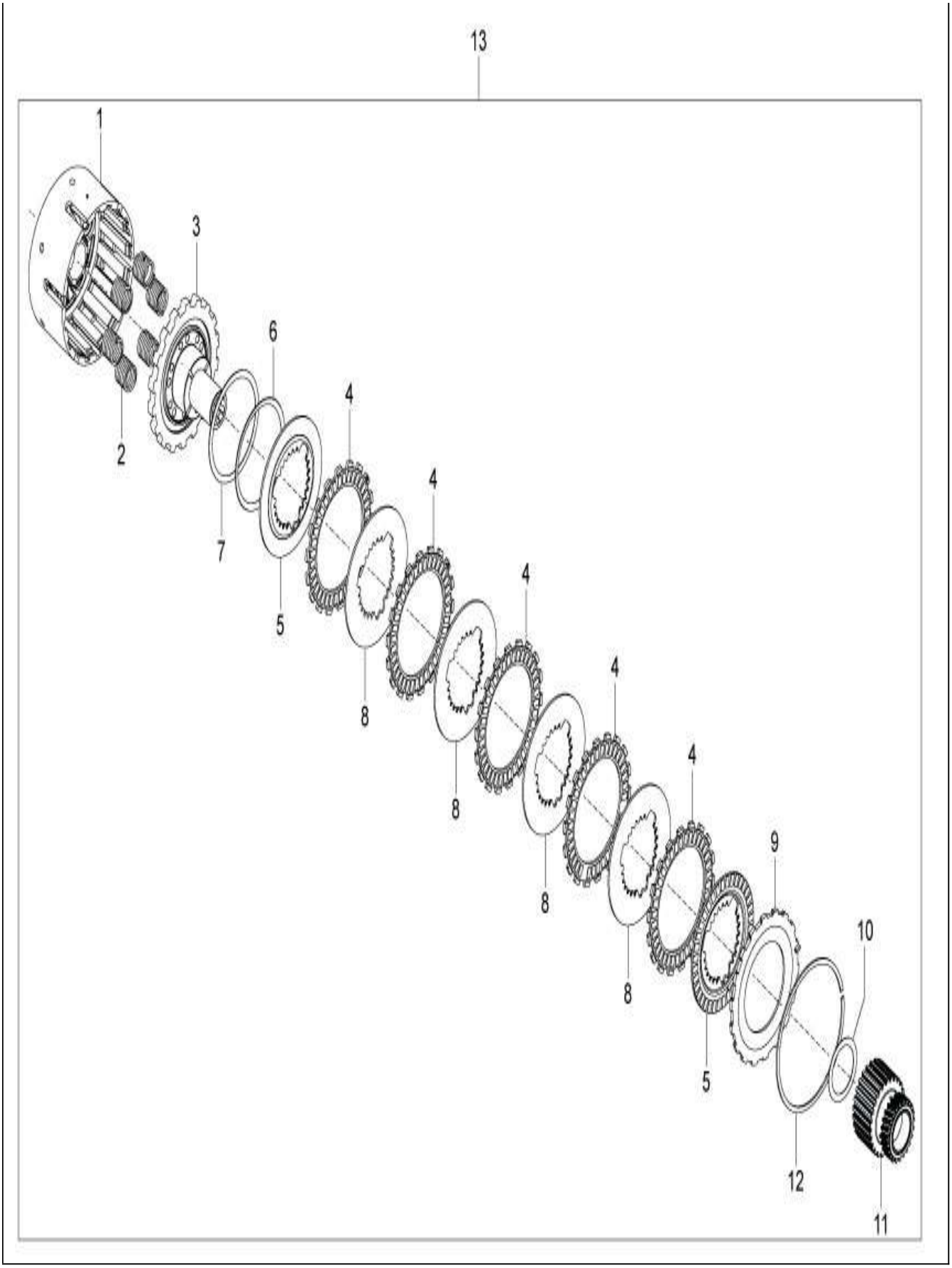
13
1
3
6
4
2
4
7
4
5
4
8
4
8
9
8
10
8
5
12
11

111

Print Date: 05-Oct-2022

PLATE-24.1

ALUMINIUM CLUTCH ASSEMBLY

Fig. No.	Part No.	Description	Qty	Remarks
1	1A017153	CLUTCH HOUSING	1	
2	1A017147	CLUTCH SPRING	6	
3	1A017154	PLATE HUB	1	
4	1A017155	DRIVER PLATE	5	
5	1A017156	DRIVEN PLATE	2	
6	1A017157	DAMPER SPRING	1	
7	1A017158	DAMPER SPRING RETAINER	1	
8	1A017159	DRIVEN PLATE	4	
9	1A017160	CLUTCH LOCK PLATE	1	
10	1A017161	SHIM WASHER	1	
11	1A017162	ENGINE GEAR WITH BUSH	1	
12	1A017163	RETAINING RING	1	
13	1A015065	COMPLETE CLUTCH ASSY	1	
14	KIT95117R	KIT ALUMINIUM CLUTCH PLATES DSL BS4/BS6	1	Complete Clutch Plate Set (NI)

112

Print Date: 05-Oct-2022

PLATE-24.2

CLUTCH & COVER ASSEMBLY (FOR ALUMINIUM CLUTCH)

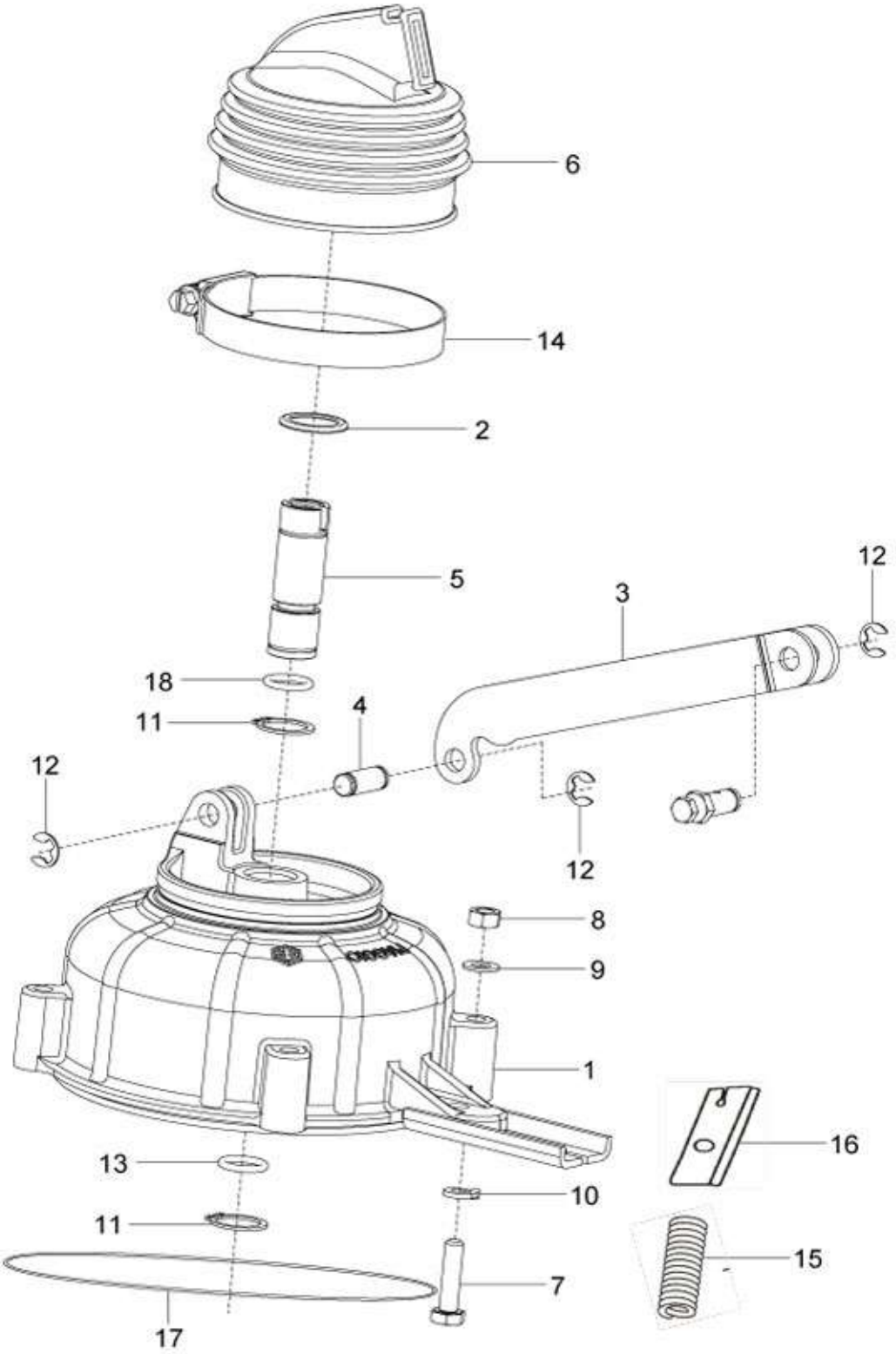
6
14
2
5
12
3
18
11
4
12
12
8
9
1
16
13
10
11
15
7
17

113

Print Date: 05-Oct-2022

PLATE-24.2

CLUTCH & COVER ASSEMBLY (FOR ALUMINIUM CLUTCH)

Fig. No.	Part No.	Description	Qty	Remarks
1	1F000830	CLUTCH COVER	1	
2	120164019	RETAINING PLATE	1	
3	1A019307	CLUTCH LEVER WITH I.P.	1	Modified
3	127460010	LINK ASSLY - CLUTCH (IMPROVED)	1	Old
4	127013013	PIN CLUTCH	1	
5	1A014753	PLUNGER SHAFT	1	
6	127012019	BELLOW CLUTCH ACTUATING	1	
7	31092	HEX. HD SCREW M6X25	1	
8	20106	HEX NUT M6	1	
9	3056	PLAIN WASHER M6 OD12	1	
10	016406	SPRING WASHER	1	
11	842001600	CIRCLIP DIA.16(EXT)	1	
12	843000809	CIRCLIP DIA.8(EXT) TYPE C	2	
13	B019220	O- RING (PLUNGER SHAFT)	1	
14	120170018	HOSE CLIP - CLUTCH COVER BELOW	1	
15	127185012	SPRING - CLUTCH COVER	1	
16	127471019	BRACKET CLUTCH CABLE GUIDE	1	
17	825123207	O - RING CLUTCH COVER	1	
18	B019220	O- RING (PLUNGER SHAFT)	1	

114