# Parts Catalog

# Commercial Vehicle

**ape City Xtra Step-II AF BS-IV Exp LAM**

**PIAGGIO VEHICLES PRIVATE LIMITED**
Registered Office: Bund Garden Road ,Opp. Residency Club , Pune (India)

Print Date: 07-Apr-2022

# PLATES INDEX


| Sr No. | Plate Name | Plate No. | Page No. |
|---|---|---|---|
| 1 | ENG.200 4S/3V BSIV APE PAX | 1 | 1-2 |
| 2 | Clutch Cover Assembly | 2 | 3-4 |
| 3 | CLUTCH ASSEMBLY | 3 | 5-6 |
| 4 | Lubrication Components | 4 | 7-8 |
| 5 | Complete Differential Gear | 5 | 9-10 |
| 6 | Differential Gear Group | 6 | 11-12 |
| 7 | Intake Fitting - Carburetor | 7 | 13-16 |
| 8 | Air Filter Assembly | 8 | 17-18 |
| 9 | Complete Crankcase | 9 | 19-22 |
| 10 | Gear Sector Assembly | 10 | 23-24 |
| 11 | Cylinder Head With I.P. | 11 | 25-26 |
| 12 | Crankshaft Assembly | 12 | 27-28 |
| 13 | Aircooling Circuit Components | 13 | 29-30 |
| 14 | Timing Group | 14 | 31-32 |
| 15 | Cylinder- Piston Group | 15 | 33-34 |
| 16 | Electric Starting Group | 16 | 35-36 |
| 17 | Speed Gear Group | 17 | 37-38 |
| 18 | Engine Support | 18 | 39-42 |
| 19 | Fuel Tank/Filter/Fuel Pipes | 19 | 43-46 |
| 20 | Wind Shield/Glass/Beading | 20 | 47-48 |
| 21 | Chassis Frame & Seat | 21 | 49-52 |
| 22 | Doors & Drivers Seat | 22 | 53-56 |
| 23 | Inner Parts Of Cabin | 23 | 57-58 |
| 24 | Rear Suspention | 24 | 59-62 |
| 25 | Steering Column And Front Suspension | 25 | 63-66 |
| 26 | Handle Bar And Control | 26 | 67-68 |
| 27 | Brake -Tandem Master Cylinder ,Brake Pipe And Hand Brakes | 27 | 69-72 |
| 28 | Electrical Devices | 28 | 73-78 |
| 29 | Front Fascia | 29 | 79-82 |
| 30 | Open Box Body (Pick UP) | 30 | 83-86 |

Print Date: 07-Apr-2022

## PLATES INDEX


| Sr No. | Plate Name | Plate No. | Page No. |
|---|---|---|---|
| 31 | Wiring Harness | 31 | 87-88 |
| 32 | Front Brake Assembly | 32 | 89-90 |
| 33 | Rear Brake Assembly | 33 | 91-92 |
| 34 | Cables | 34 | 93-94 |
| 35 | CNG Kit | 35 | 95-96 |
| 36 | Two Stage CNG Regulator | 36 | 97-98 |
| 37 | First Stage Reduction Unit | 37 | 99-100 |
| 38 | LPG Kit | 38 | 101-102 |
| 39 | Two Stage LPG Regulator | 39 | 103-104 |
| 40 | Tools And Accessories | 40 | 105-108 |

Print Date: 07-Apr-2022

# PICTORIAL PLATES INDEX

**PLATE-1** **ENG.200 4S/3V BSIV APE PAX**

**Page No. :1-2**

**PLATE-2** **Clutch Cover Assembly**

**Page No. :3-4**

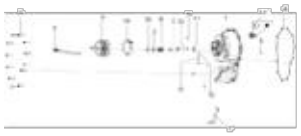

**PLATE-3** **CLUTCH ASSEMBLY**

**Page No. :5-6**

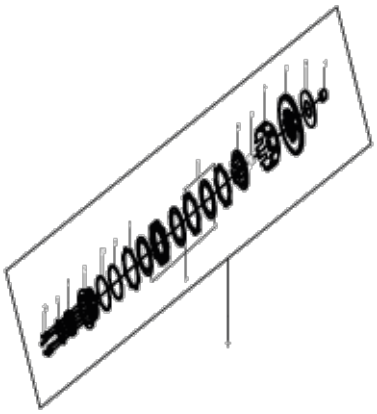

**PLATE-4** **Lubrication Components**

**Page No. :7-8**

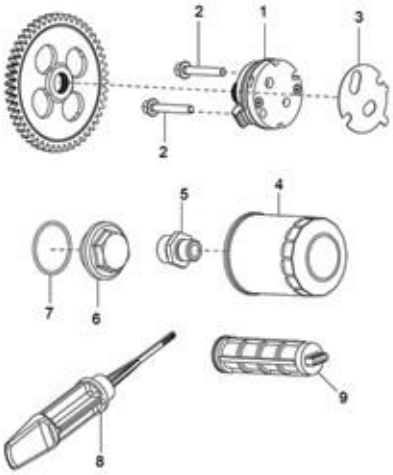


**PLATE-5** **Complete Differential Gear**

**Page No. :9-10**

**PLATE-6** **Differential Gear Group**

**Page No. :11-12**

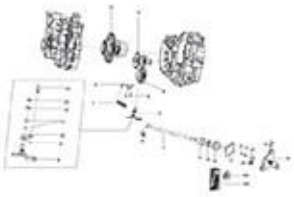

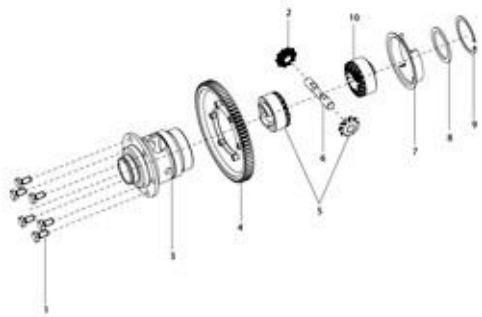

**PLATE-7 Intake Fitting - Carburetor**

**Page No. :13-16**

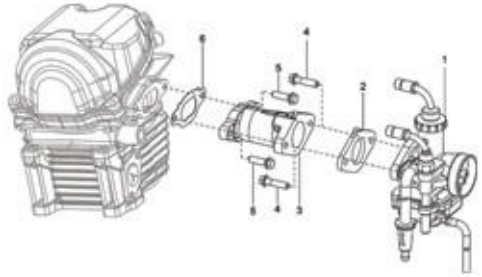

**PLATE-8 Air Filter Assembly**

**Page No. :17-18**

Print Date: 07-Apr-2022

# PICTORIAL PLATES INDEX

**PLATE-9** **Complete Crankcase**

**Page No. :19-22**

**PLATE-10** **Gear Sector Assembly**

**Page No. :23-24**

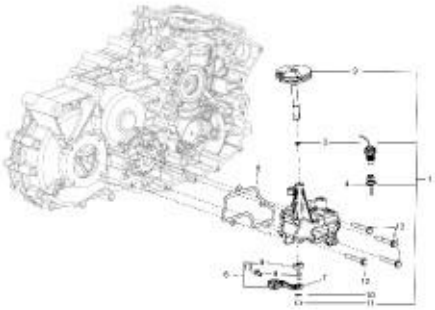

**PLATE-11** **Cylinder Head With I.P.**

**Page No. :25-26**

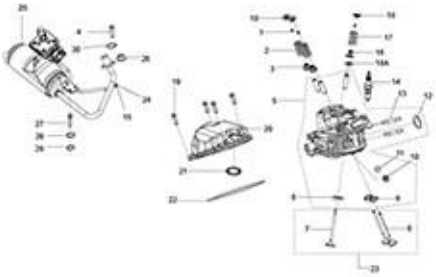

**PLATE-12** **Crankshaft Assembly**

**Page No. :27-28**

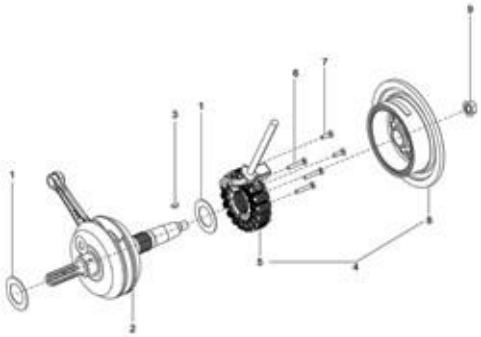

**PLATE-13** **Aircooling Circuit Components**

**Page No. :29-30**

**PLATE-14** **Timing Group**

**Page No. :31-32**

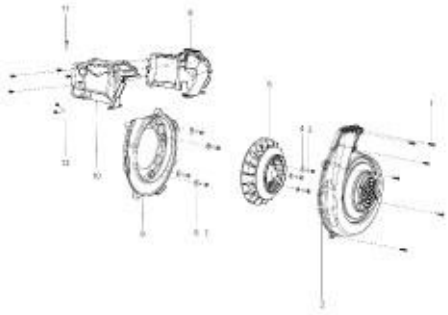

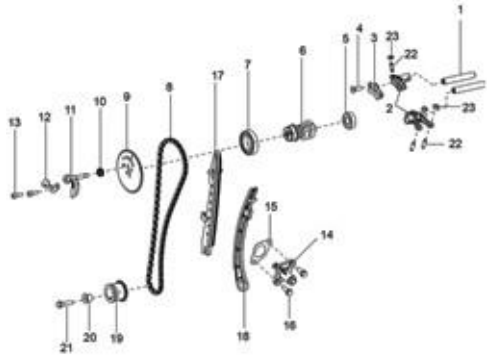

**PLATE-15 Cylinder- Piston Group**

**Page No. :33-34**

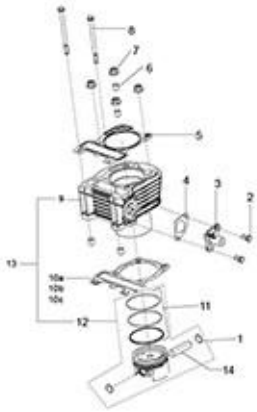

**PLATE-16 Electric Starting Group**

**Page No. :35-36**

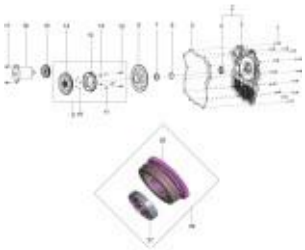

Print Date: 07-Apr-2022

# PICTORIAL PLATES INDEX

**PLATE-17 Speed Gear Group**

**Page No. :37-38**

**PLATE-18 Engine Support**

**Page No. :39-42**

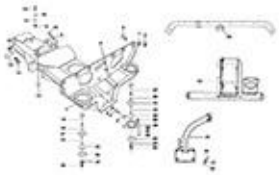

**PLATE-19 Fuel Tank/Filter/Fuel Pipes**

**Page No. :43-46**

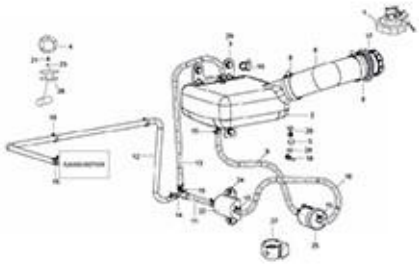

**PLATE-20 Wind Shield/Glass/Beading**

**Page No. :47-48**

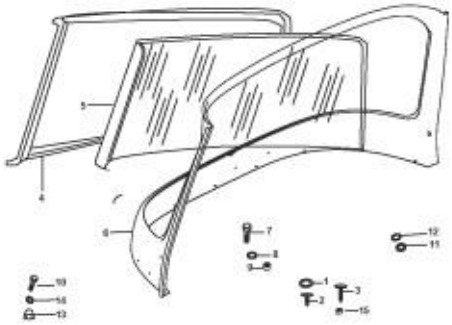

**PLATE-21 Chassis Frame & Seat**

**Page No. :49-52**

**PLATE-22 Doors & Drivers Seat**

**Page No. :53-56**

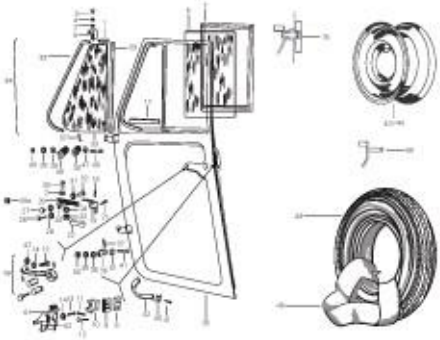

**PLATE-23 Inner Parts Of Cabin**

**PLATE-24 Rear Suspention**

**Page No. :57-58**

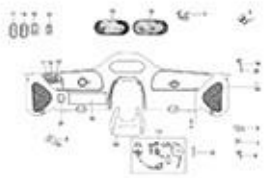

**Page No. :59-62**

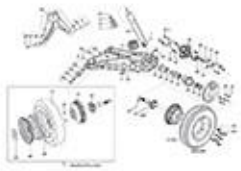

Print Date: 07-Apr-2022

# PICTORIAL PLATES INDEX

**PLATE-25** **Steering Column And Front Suspension**

**Page No. :63-66**

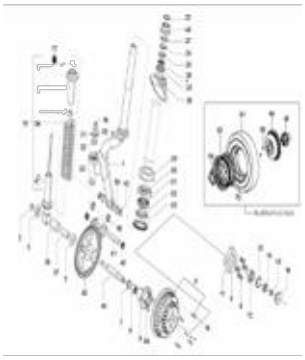

**PLATE-26** **Handle Bar And Control**

**Page No. :67-68**

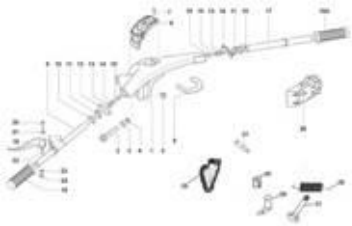

**PLATE-27** **Brake -Tandem Master Cylinder ,Brake Pipe And Hand Brakes**

**Page No. :69-72**

**PLATE-28** **Electrical Devices**

**Page No. :73-78**

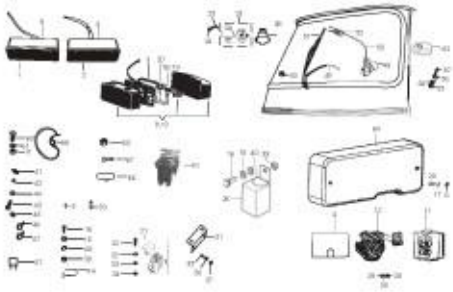

**PLATE-29** **Front Fascia**

**Page No. :79-82**

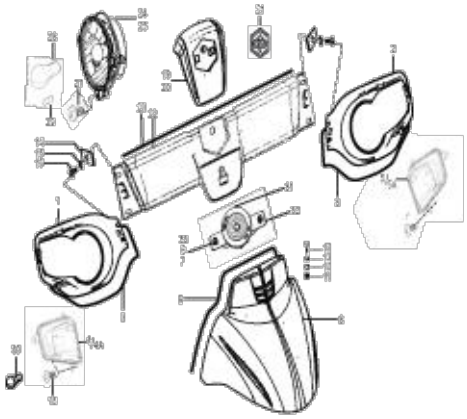

**PLATE-30** **Open Box Body (Pick UP)**

**Page No. :83-86**

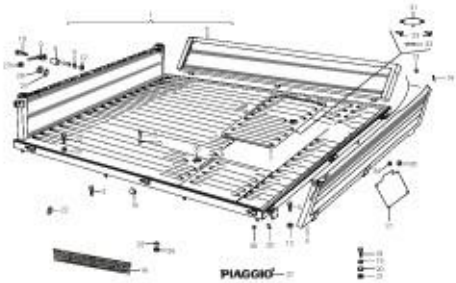


**PLATE-31** **Wiring Harness**

**PLATE-32** **Front Brake Assembly**

**Page No. :87-88**

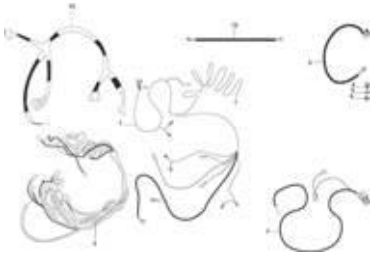

**Page No. :89-90**

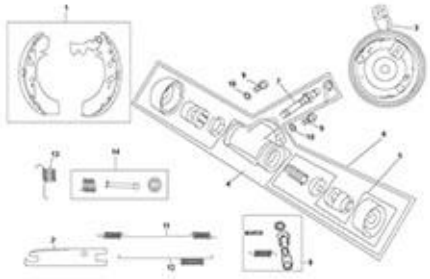

Print Date: 07-Apr-2022

# PICTORIAL PLATES INDEX

**PLATE-33 Rear Brake Assembly**

**Page No. :91-92**

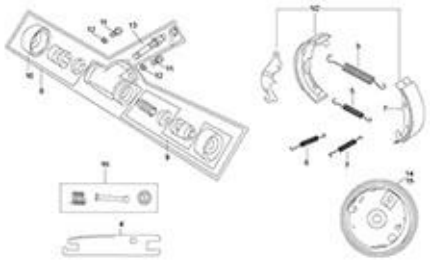

**PLATE-34 Cables**

**Page No. :93-94**

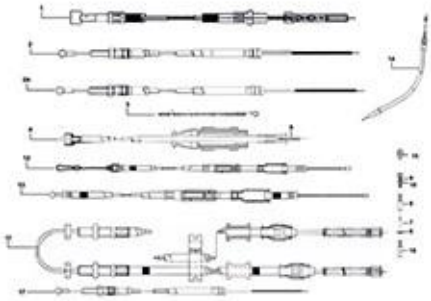

**PLATE-35 CNG Kit**

**Page No. :95-96**

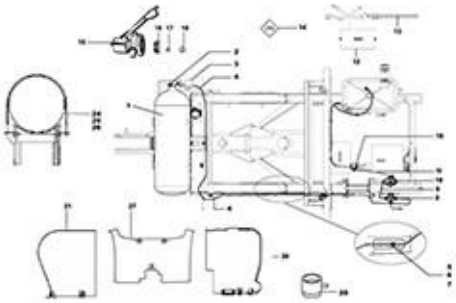

**PLATE-36 Two Stage CNG Regulator**

**Page No. :97-98**

**PLATE-37 First Stage Reduction Unit**

**Page No. :99-100**

**PLATE-38 LPG Kit**

**Page No. :101-102**

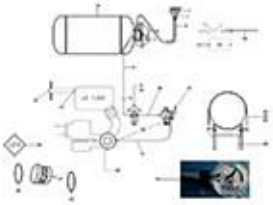

**PLATE-39 Two Stage LPG Regulator**

**PLATE-40 Tools And Accessories**

**Page No. :103-104**

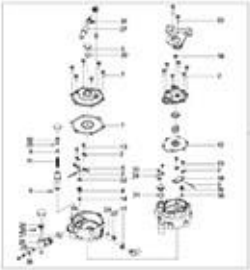

**Page No. :105-108**

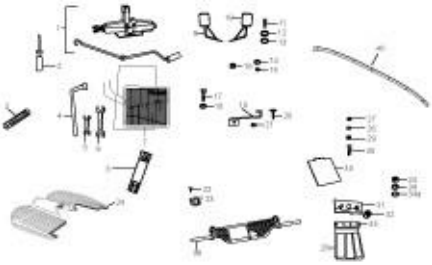

Print Date: 07-Apr-2022

**PLATE-1**

**ENG.200 4S/3V BSIV APE PAX**

1

1

Print Date: 07-Apr-2022

**PLATE-1**

**ENG.200 4S/3V BSIV APE PAX**

| Fig. No. | Part No. | Description | Qty | Remarks |
|---|---|---|---|---|
| 1 | CM283908 | ENG.200 4S/3V BSIV APE PAX PETROL | 1 | PTL |
| 2 | CM283909 | ENG.200 4S/3V BSIV APE PAX LPG | 1 | LPG |
| 3 | CM283910 | ENG.200 4S/3V BSIV APE PAX CNG | 1 | CNG |
| 4 | CM283924 | ENG.200 4S/3V BSIV APE PAX PETROL LAM | 1 | STEP-2 BS3 HS LAM PTL |

2

Print Date: 07-Apr-2022

**PLATE-2**

**Clutch Cover Assembly**

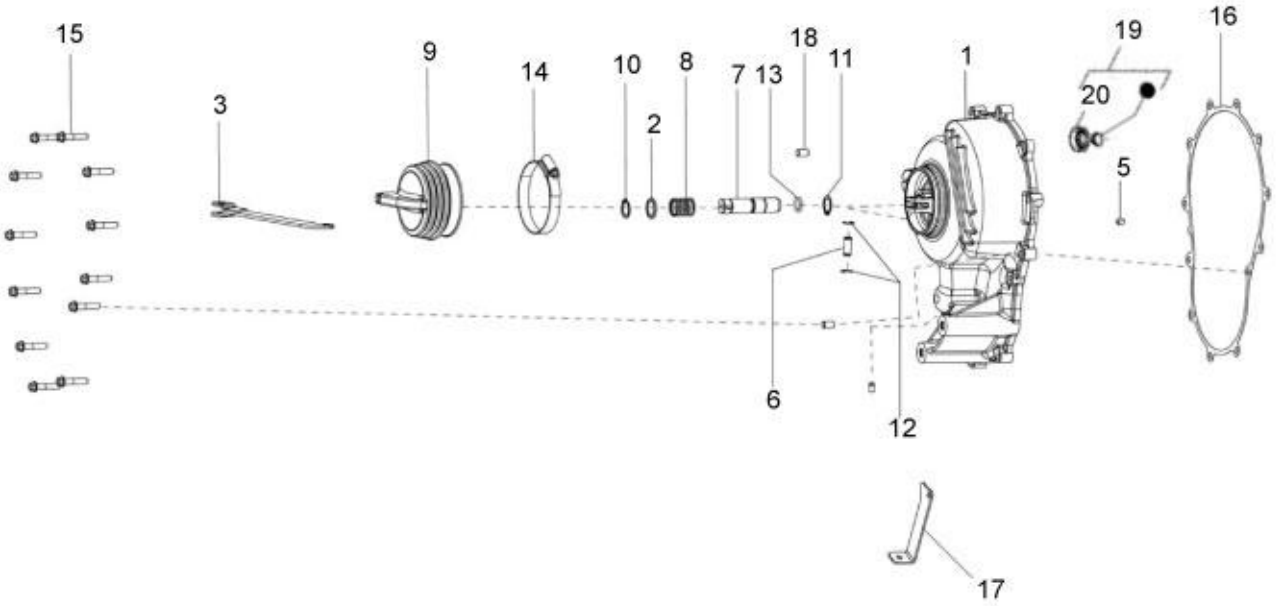
15
3
9
14
10
2
8
7
13
18
11
1
19
20
16
5
6
12
17

3

Print Date: 07-Apr-2022

**PLATE-2**

**Clutch Cover Assembly**

| Fig. No. | Part No. | Description | Qty | Remarks |
|---|---|---|---|---|
| 1 | 1A010136 | CLUTCH COVER | 1 | |
| 2 | 120164019 | RETAINING PLATE | 1 | |
| 3 | 127460010 | LINK ASSLY - CLUTCH (IMPROVED) | 1 | |
| 6 | 127013013 | PIN CLUTCH | 1 | |
| 7 | 1A010548 | PLUNGER SHAFT | 1 | |
| 8 | 127185012 | SPRING - CLUTCH COVER | 1 | |
| 9 | 127012019 | BELLOW CLUTCH ACTUATING | 1 | |
| 10 | 842001600 | CIRCLIP DIA.16(EXT) | 1 | |
| 11 | 842001600 | CIRCLIP DIA.16(EXT) | 1 | |
| 12 | 843000809 | CIRCLIP DIA.8(EXT) TYPE C | 2 | |
| 13 | B019220 | O- RING (PLUNGER SHAFT) | 1 | |
| 14 | 120170018 | HOSE CLIP - CLUTCH COVER BELOW | 1 | |
| 15 | B018853 | FLANGED HEXAGONAL HEAD SCREW M6X30 | 12 | |
| 16 | 1A011940 | CLUTCH COVER GASKET | 1 | |
| 17 | 1A008077 | SUPPORT BRACKET STARTER MOTOR CABLE | 1 | |
| 18 | 1A000708 | DOWEL (Ø7,5, H=12) | 2 | |
| 19 | SP1A010560 | CLUTCH PRESSURE BUSH WITH I.P. | 1 | |
| 20 | 478261 | PULLEY SHAFT BEARING | 1 | |

4

Print Date: 07-Apr-2022

**PLATE-3**
**CLUTCH ASSEMBLY**

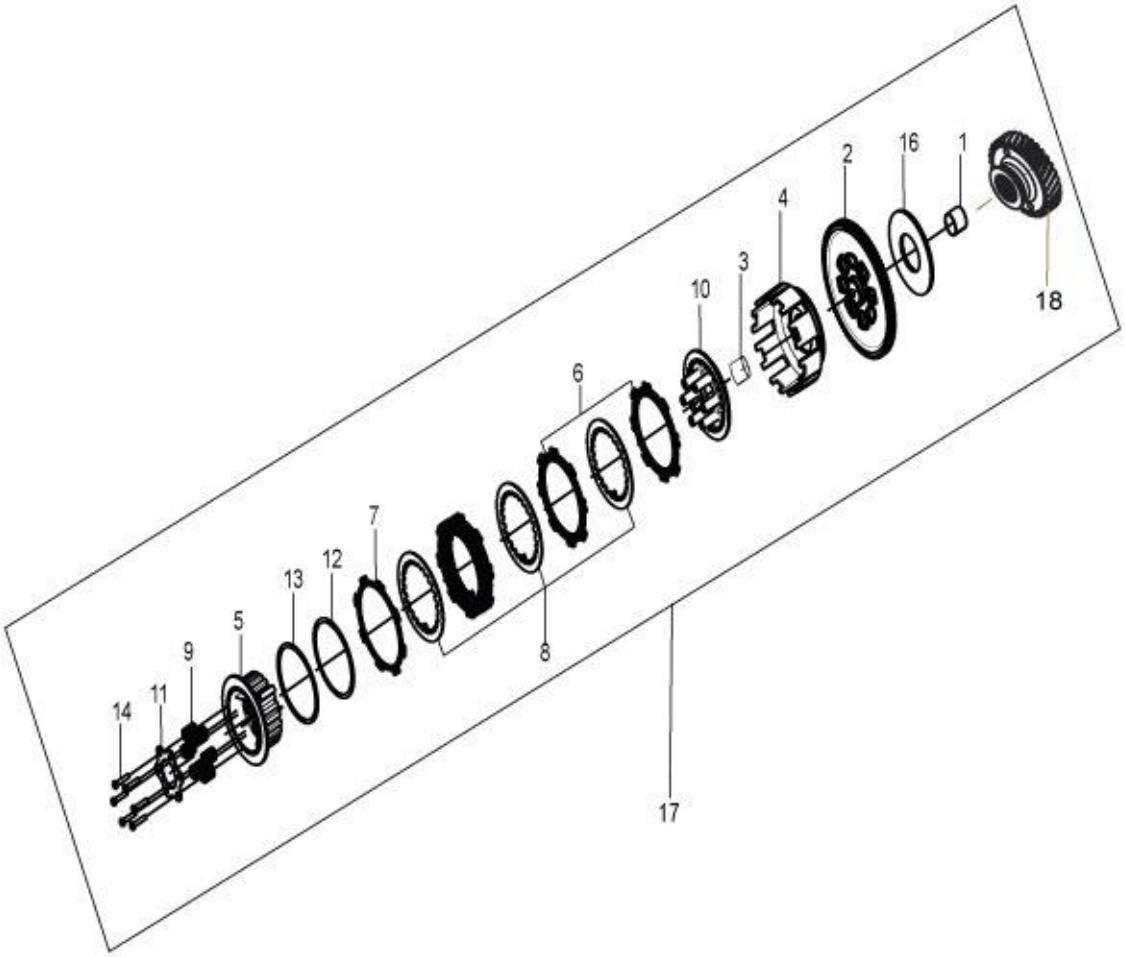
1
2
3
4
5
6
7
8
9
10
11
12
13
14
16
17
18

5

Print Date: 07-Apr-2022

**PLATE-3**
**CLUTCH ASSEMBLY**

| Fig. No. | Part No. | Description | Qty | Remarks |
|---|---|---|---|---|
| 1 | 1A010461 | SPACER | 1 | |
| 2 | --- | CLUTCH GEAR | 1 | Not Serviceable |
| 3 | 1A010561 | CLUTCH PRESSURE BUSH | 1 | |
| 4 | 1A012150 | HOUSING CLUTCH ASSY | 1 | |
| 5 | 1A012152 | HUB CLUTCH | 1 | |
| 6 | 1A012153 | FRICTION PLATE | 6 | |
| 7 | 1A012154 | RED FRICTION PLATE | 1 | |
| 8 | 1A012155 | PLATE CLUTCH | 6 | |
| 9 | 1A012156 | COMPRESSION SPRING | 6 | |
| 10 | 1A012157 | WHEEL CLUTCH | 1 | |
| 11 | 1A012158 | HOLDER CLUTCH | 1 | |
| 12 | 1A012159 | ANTI-JUDDER SPRING | 1 | |
| 13 | 1A012160 | ANTI-JUDDER WASHER | 1 | |
| 14 | 1A012161 | BOLT M5 | 6 | |
| 15 | 1A012151 | PLATE CLUTCH ASSY | 1 | |
| 16 | B019420 | CONICAL SPRING KNURLED WASHER | 3 | NS-Order on modi.assy.P/N.SP1A018746 INA |
| 17 | 1A010119 | CLUTCH ASSY | 1 | |
| 18 | 1A010208 | ENGINE GEAR | 1 | |
| 19 | KIT95131R | KIT CLUTCH PLATE SET FOR STEP-2 ENG. AF | 1 | Complete Clutch Plate Set (NI |

6

Print Date: 07-Apr-2022

**PLATE-4**

**Lubrication Components**

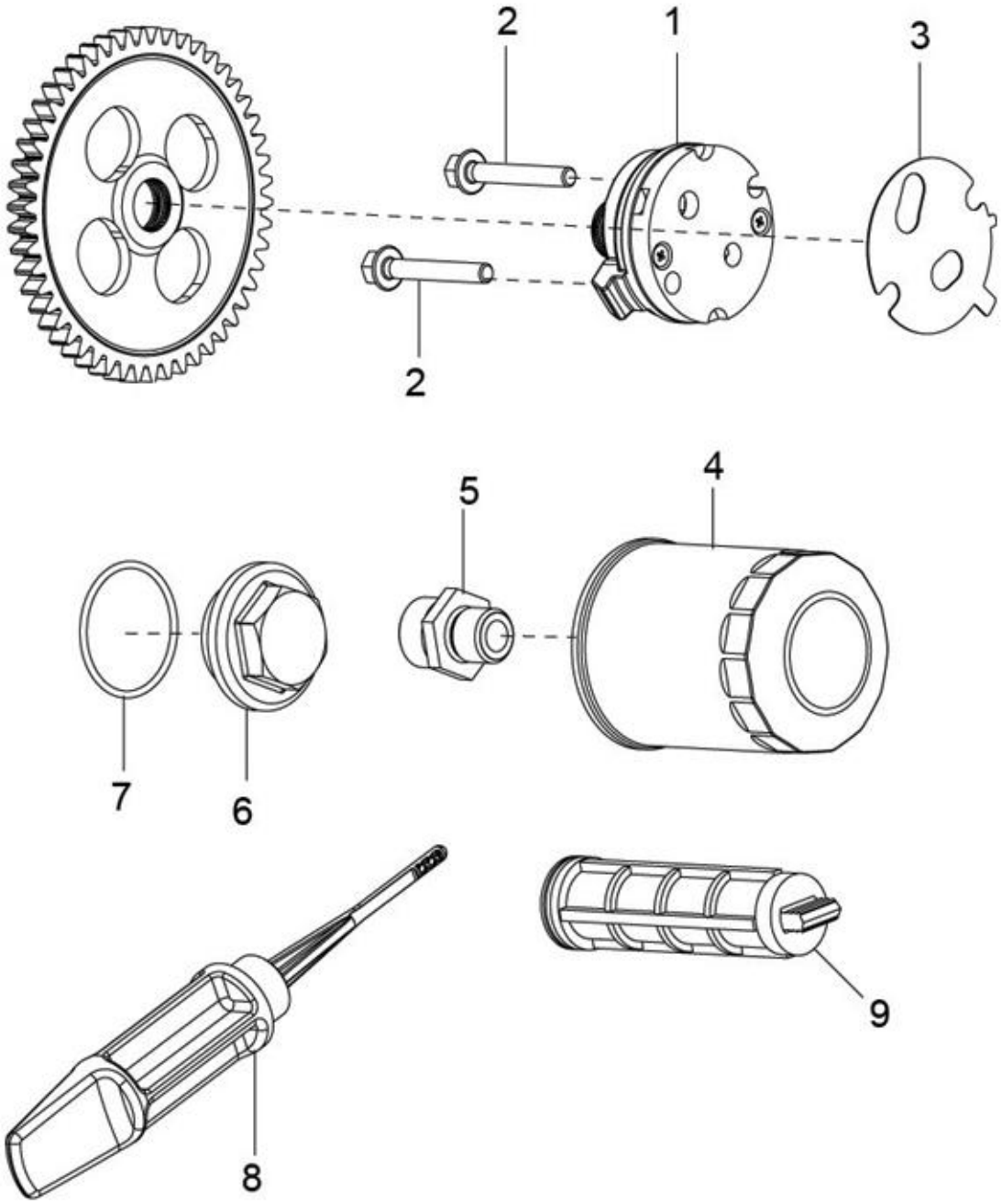
2
1
3
2
5
4
7
6
9
8

7

Print Date: 07-Apr-2022

**PLATE-4**

**Lubrication Components**

| Fig. No. | Part No. | Description | Qty | Remarks |
|---|---|---|---|---|
| 1 | 1A006877 | OIL PUMP ASSY | 1 | |
| 2 | 1A016737 | FLANGED HEXAGONAL HEAD SCREW | 2 | |
| 3 | B015943 | CRANKCASE/ OIL PUMP GASKET | 1 | |
| 4 | 82635R | COMPLETE OIL FILTER | 1 | |
| 5 | 1A009762 | OIL FILTER SCREW | 1 | |
| 6 | B015598 | OIL FILTER PLUG | 1 | |
| 7 | 285536 | O-RING GASKET 31.47X1.78 | 1 | |
| 8 | 1A007047 | OIL DIPSTICK COMPLETE | 1 | |
| 9 | 1A006812 | COMPLETE INTAKE OIL FILTER | 1 | |

8

Print Date: 07-Apr-2022

**PLATE-5**

**Complete Differential Gear**

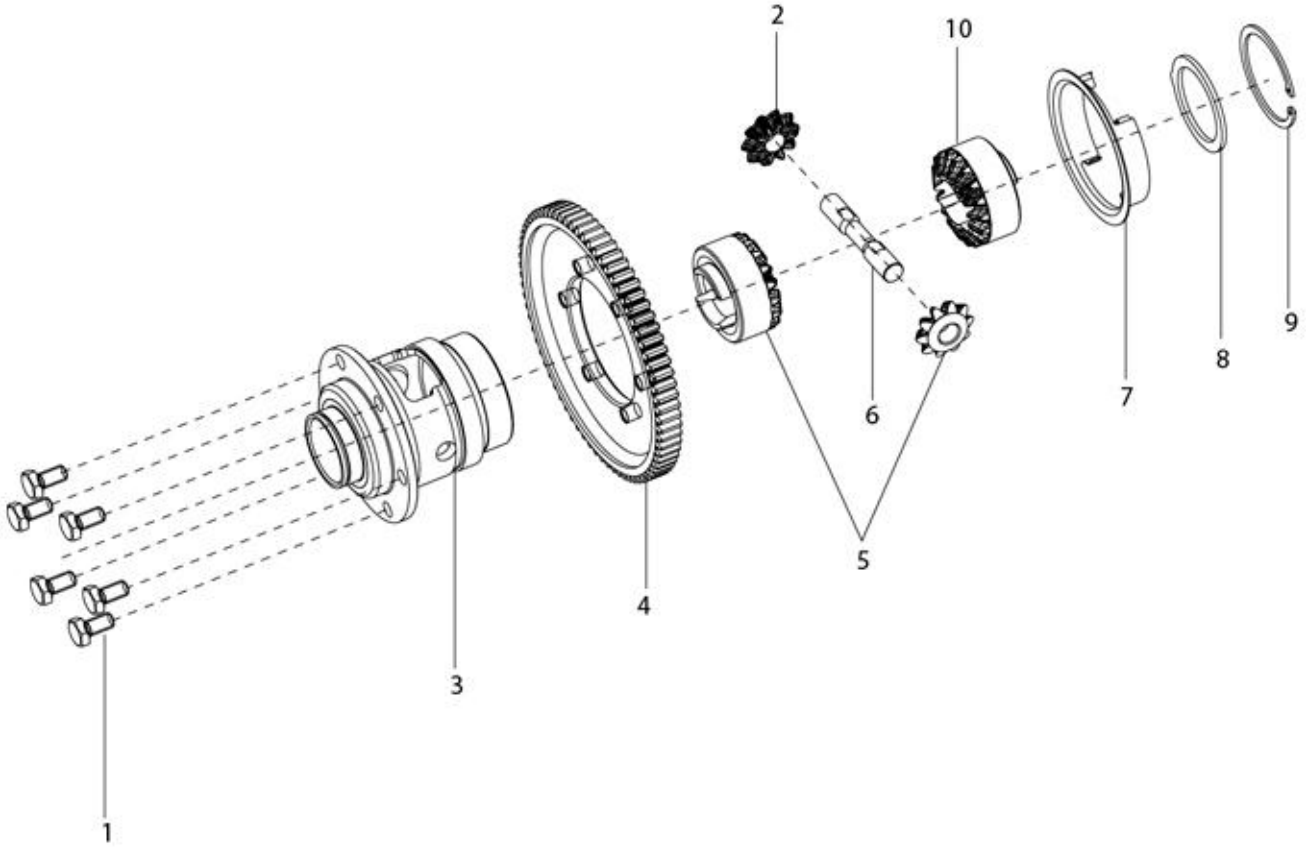
2
10
9
8
7
6
5
4
3
1

9

Print Date: 07-Apr-2022

**PLATE-5**

**Complete Differential Gear**

| Fig. No. | Part No. | Description | Qty | Remarks |
|---|---|---|---|---|
| 1 | B016774 | FLANGED HEXAGONAL SCREW M6X25 | 6 | |
| 2 | 940028 | GEAR SUN AND DIFFERENTIAL GEAR | 3 | |
| 3 | 288730 | DIFFERENTIAL CAGE | 1 | |
| 4 | SP1A006805 | DIFFERENTIAL CROWN-PETROL/LPG | 1 | PTL/LPG |
| 4 | SP1A008545 | DIFFERENTIAL CROWN-CNG | 1 | |
| 5 | 940028 | GEAR SUN AND DIFFERENTIAL GEAR | 1 | |
| 6 | 132129 | PIN | 1 | |
| 7 | 132244 | STOPPER THK=1.0 | 1 | |
| 8 | 220575 | WASHER 65X3 | 1 | |
| 9 | 132134 | CIRCLIP | 2 | |
| 10 | 940028 | GEAR SUN AND DIFFERENTIAL GEAR | 2 | |
| 11 | CM308302 | DIFFERENTIAL CROWN | 1 | STEP-2 BS3 HS LAM PTL,NI |
| 12 | 1A008547 | REVERSE GEAR- CNG | 1 | STEP-2 BS3 HS LAM PTL,NI |
| 13 | 1A010632 | SLIDING GEAR | 1 | STEP-2 BS3 HS LAM PTL,NI |

**10**

Print Date: 07-Apr-2022

**PLATE-6**

**Differential Gear Group**

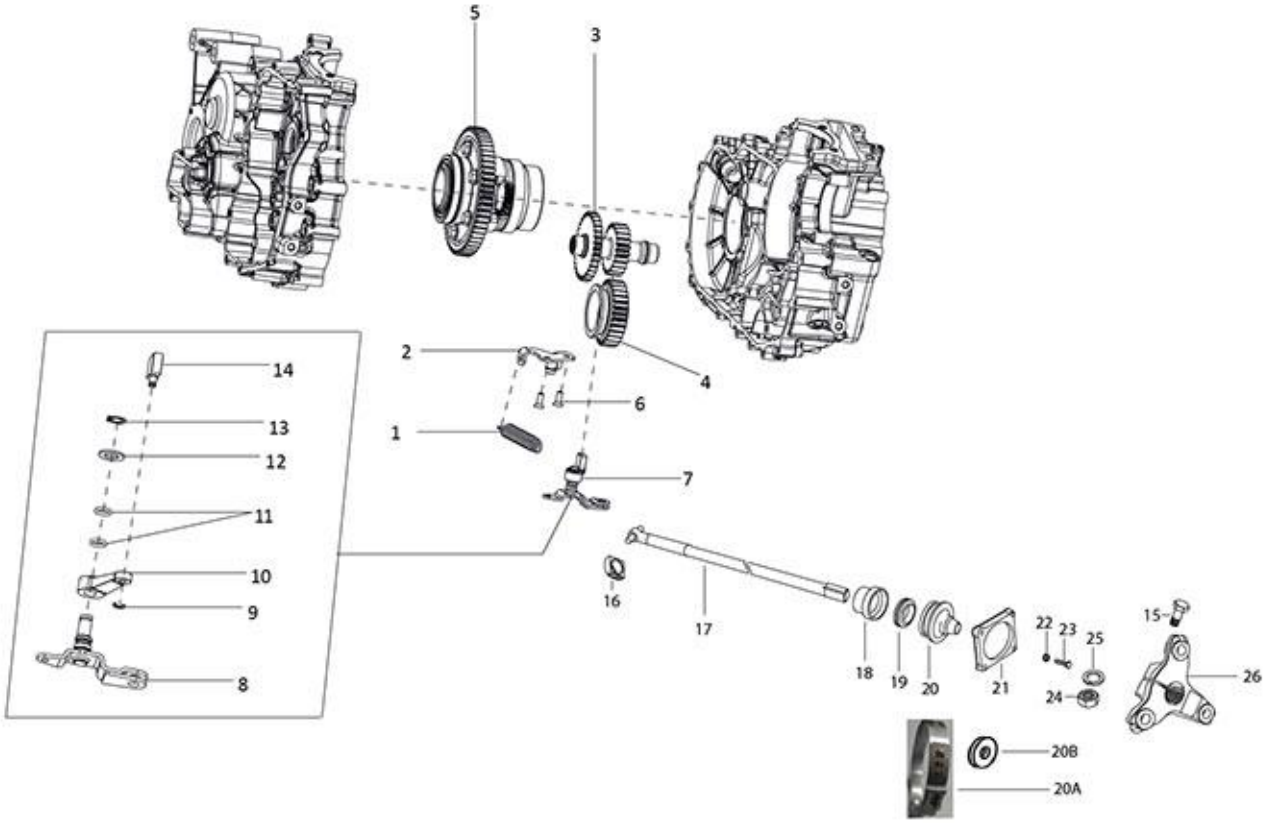
5
3
2
4
6
1
7
14
13
12
11
10
9
8
16
17
18
19
20
21
22
23
25
24
15
26
20B
20A

11

Print Date: 07-Apr-2022

**PLATE-6**

**Differential Gear Group**

| Fig. No. | Part No. | Description | Qty | Remarks |
|---|---|---|---|---|
| 1 | 127111011 | REVERSE GEAR SPRING | 1 | |
| 2 | 1A008804 | REVERSE CABLE REACTION BRACKET | 1 | |
| 3 | 1A006806 | REVERSE GEAR -PTL/LPG | 1 | |
| 3 | 1A008547 | REVERSE GEAR- CNG | 1 | LAM/HS (PTL&LPG) |
| 4 | 1A009779 | SLIDING GEAR(PTL AND LPG) | 1 | PTL/LPG |
| 4 | 1A010632 | SLIDING GEAR | 1 | LAM/HS (PTL&LPG) |
| 5 | SPCM308401 | COMPLETE DIFFERENTIAL GEAR- SPD | 1 | PTL/LPG |
| 5 | SPCM308402 | COMPLETE DIFFERENTIAL GEAR | 1 | LAM/HS (PTL&LPG) |
| 6 | 1A016964 | CSK PHILIPS HEAD SCREW | 2 | |
| 7 | SP1A007579 | COMPL. INVERTER LEVER SECTOR(BSIV)- SPD | 1 | |
| 8 | 1A009093 | INVERTER LEVER SECTOR WITH P.I. | 1 | |
| 9 | 843000500 | CIRCLIP DIA.5 (EXT) TYPE C | 1 | |
| 10 | 1A007605 | GEAR SHIFTER LEVER | 1 | |
| 11 | 1A005176 | O- RING | 2 | |
| 12 | 1A007501 | PLANE WASHER | 1 | |
| 13 | 6410 | CIRCLIP | 1 | |
| 14 | 1A007051 | SLIDER | 1 | |
| 15 | B024614 | HEX HEAD BOLT M10X45 CL 10.9 | 2 | |
| 16 | 112867R | SLIDER BLOCK PROP. SHAFT | 4 | |
| 17 | B023940 | PROP. SHAFT S/A | 2 | |
| 18 | 113278 | BRACKET RETAINER RING (41736) | 2 | |
| 19 | 6C000312R | SEAL RING | 2 | |
| 20 | 6C000016 | BELLOW | 2 | |
| 20A | 6C000041 | OTIKAR CLAMP FOR BELLOW | 2 | |
| 20B | 3056 | PLAIN WASHER M6 OD12 | 6 | |
| 21 | 111356 | COVER | 2 | |
| 22 | 016406 | SPRING WASHER | 2 | |
| 23 | 31092 | HEX. HD SCREW M6X25 | 2 | |
| 24 | 231370 | SELF BREAKING NUT M10 | 2 | |
| 25 | 16410 | SPRING WASHER | 2 | |
| 26 | 111498 | ELASTIC HUB | 2 | |

12

Print Date: 07-Apr-2022

**PLATE-7**

**Intake Fitting - Carburetor**

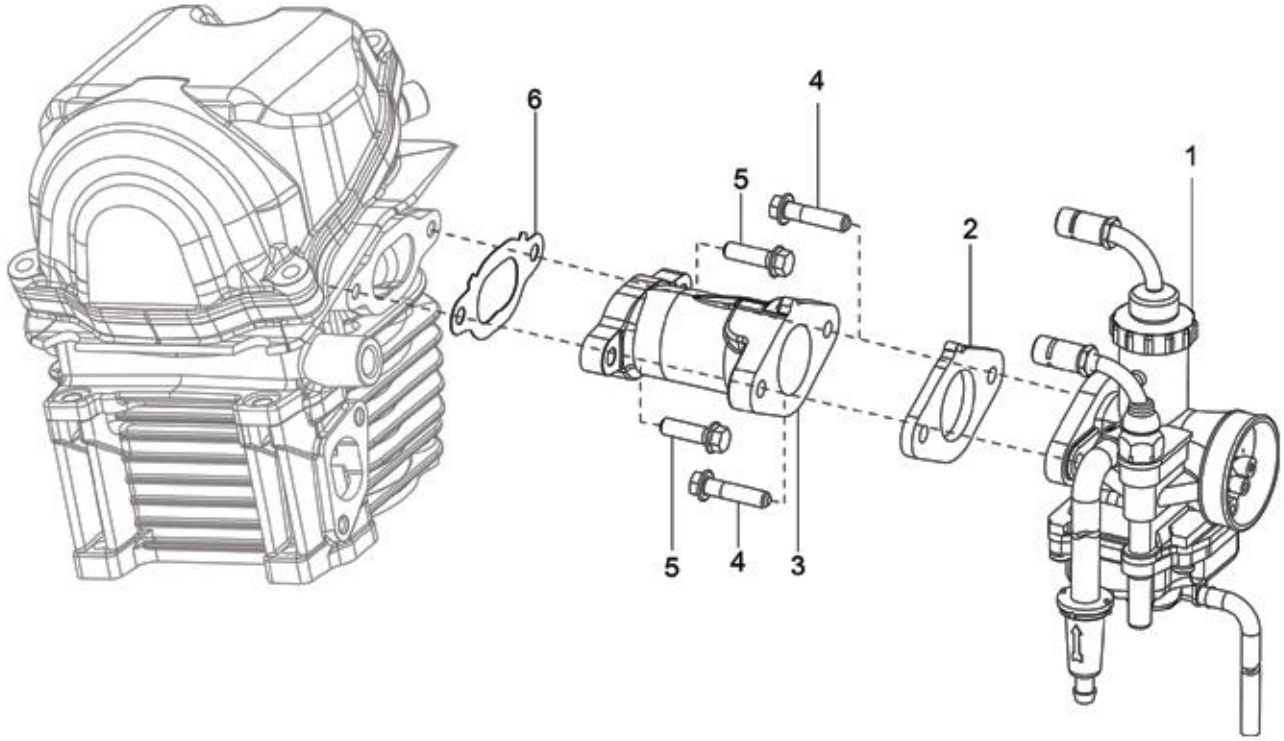
6
4
5
1
2
5
4
3

13

Print Date: 07-Apr-2022

**PLATE-7**

**Intake Fitting - Carburetor**

| Fig. No. | Part No. | Description | Qty | Remarks |
|---|---|---|---|---|
| 1 | CM284101 | CARBURETTOR UVD 22-PETROL | 1 | PTL |
| 1 | CM166102 | CARBURETOR UVD 22-LPG | 1 | LPG |
| 1 | CM166103 | CARBURETOR UVD 22-CNG | 1 | CNG |
| 2 | B015543 | COMPLETE INTAKE FITTING SUPPORT | 1 | PTL |
| 2 | B016016 | INTAKE FITTING GASKET WITH O-RING | 1 | CNG /LPG |
| 3 | 1A009632 | INTAKE FITTING-PLT | 1 | |
| 3 | 1A007409 | INTAKE FITTING-LPG/CNG | 1 | |
| 4 | B016774 | FLANGED HEXAGONAL SCREW M6X25 | 2 | |
| 5 | 018639 | SCREW M6X20 | 2 | |
| 6 | B018442 | INTAKE FITTING GASKET | 1 | |
| 7 | 1A000542 | STARTER KIT | 1 | CNGLPG(NI) |
| 8 | 1A010023 | NEEDLE JET | 1 | PTL(NI) |
| 9 | 1A010024 | NEEDLE JET HOLDER | 1 | PTL(NI) |
| 10 | 1A010025 | PILOT SCREW | 1 | PTL(NI) |
| 11 | 1A010026 | PLANE WASHER | 1 | PTL(NI) |
| 12 | 1A010088 | MAXIMUM JET | 1 | PTL(NI) |
| 13 | 1A010089 | MINIMUM JET | 1 | PTL(NI) |
| 14 | 1A010090 | VALVE COMPLETE FLOAT | 1 | PTL(NI) |
| 15 | 1A010091 | COMPLETE FLOAT | 1 | PTL(NI) |
| 16 | 1A010092 | COMPLETE BODY FLOAT CHAMBER | 1 | PTL(NI) |
| 17 | 1A010095 | FLOAT CHAMBER GASKET | 1 | PTL(NI) |
| 18 | 1A010096 | SCREW DRAIN | 1 | PTL(NI) |
| 19 | 1A010097 | THROTTLE VALVE | 1 | PTL(NI) |
| 20 | 1A010098 | JET NEEDLE | 1 | PTL(NI) |
| 21 | 1A010100 | PISTON SPRING | 1 | PTL(NI) |
| 22 | 1A010101 | TOP COMPLETE-PTL | 1 | PTL(NI) |
| 23 | 1A010102 | STOP SCREW AND SPRING | 1 | PTL(NI) |
| 24 | 1A011914 | KIT STARTER DEVICE | 1 | PTL(NI) |
| 25 | B016822 | FLOAT CHAMBER BODY ASSY KIT | 1 | CNGLPG(NI), UCAL Make carburetor |
| 26 | B016823 | FLOAT | 1 | CNGLPG(NI) |
| 27 | B016824 | STARTER DEVICE KIT | 1 | CNG(NI), UCAL Make carburetor |
| 28 | B016825 | GAS VALVE COVER KIT | 1 | CNGLPG(NI), UCAL Make carburetor |
| 29 | B016827 | THROTTLE VALVE | 1 | CNGLPG(NI) |
| 30 | B016828 | IDLE ADJUSTER KIT | 1 | CNGLPG(NI),UCAL Make carburetor |
| 31 | B016829 | SPRING (PV) | 1 | CNGLPG(NI) |

14

Print Date: 07-Apr-2022

**PLATE-7**

**Intake Fitting - Carburetor**

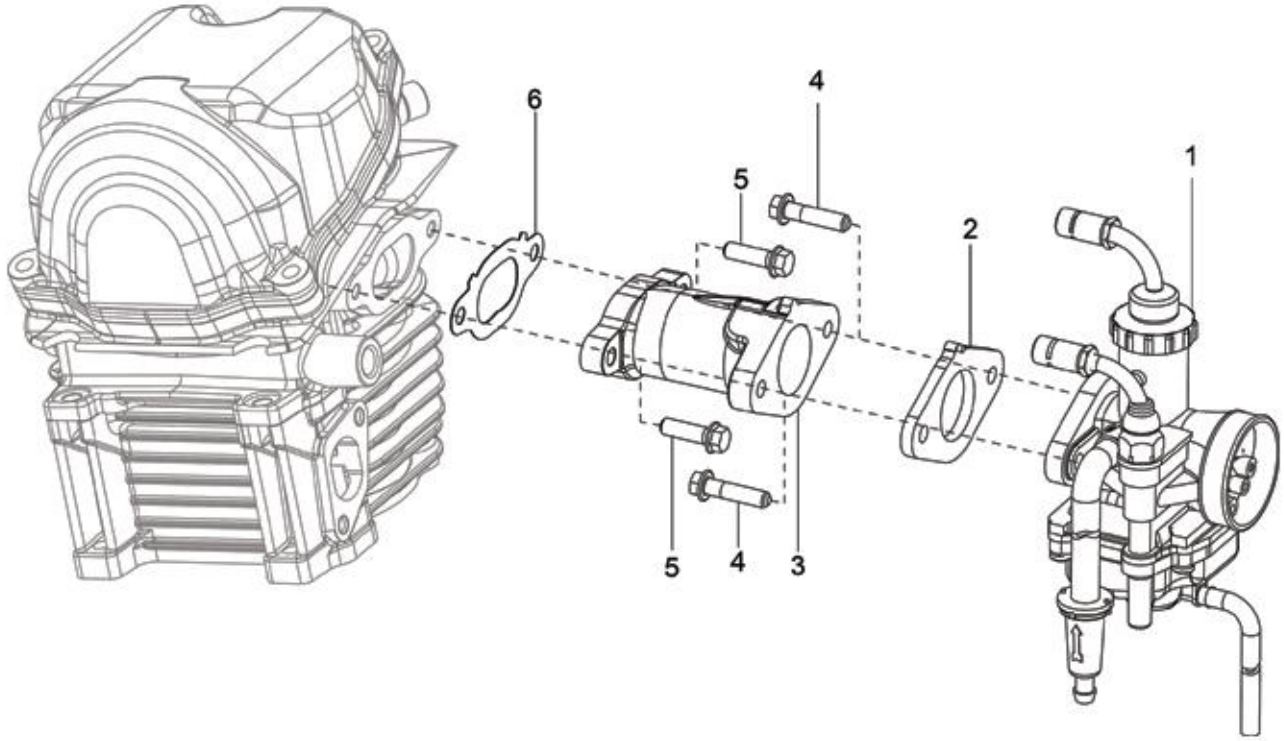
6
4
5
1
2
5
4
3

15

Print Date: 07-Apr-2022

**PLATE-7**

**Intake Fitting - Carburetor**

| Fig. No. | Part No. | Description | Qty | Remarks |
|---|---|---|---|---|
| 32 | B016834 | FLOAT CHAMBER GASKET | 1 | CNGLPG(NI) |
| 33 | B016869 | CABLE ADJUSTER KIT | 2 | CNGLPG(NI), UCAL Make carburetor |
| 34 | B017542 | NEEDLE VALVE | 1 | CNGLPG(NI) |
| 35 | CM167704 | MAIN JET (CNG) | 1 | CNG(NI) |
| 36 | CM167708 | MAXIMUM JET | 1 | LPG(NI) |
| 37 | CM167802 | PILOT JET (CNG/LPG) | 1 | CNGLPG(NI) |
| 38 | CM167902 | DIFFUSER | 1 | CNGLPG(NI) |
| 39 | CM263501 | NEEDLE JET | 1 | LPG(NI) |
| 40 | CM263502 | NEEDLE JET (CNG) | 1 | CNG(NI) |
| 41 | CM263602 | JET NEEDLE (PETROL) | 1 | CNG(NI) |
| 42 | CM263603 | CONIC NEEDLE | 1 | Under Development |
| 43 | CM264701 | AIR SCREW KIT | 1 | CNGLPG(NI),UCAL Make carburetor |

**16**

Print Date: 07-Apr-2022

**PLATE-8**

**Air Filter Assembly**

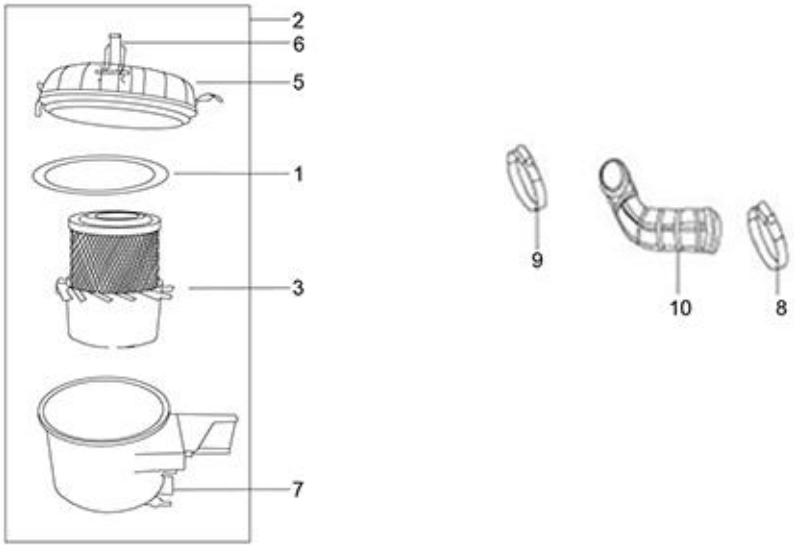
2
6
5
1
3
7
9
10
8

17

Print Date: 07-Apr-2022

**PLATE-8**

**Air Filter Assembly**

| Fig. No. | Part No. | Description | Qty | Remarks |
|---|---|---|---|---|
| 1 | 940072 | AIR FILTER COVER GASKET | 1 | |
| 2 | B073441 | AIR FILTER ASSLY.W/O BKT | 1 | PTL/LPG/CNG |
| 3 | B076112 | AIR FILTER ELEMENT | 1 | |
| 4 | B041445 | RESTRICTOR AIR FILTER INLET | 1 | LPG |
| 4 | B024937 | AIR RESTRICTOR-PETROL | 1 | PTL |
| 4 | B041089 | RESTRACTOR FOR AIR FILTER-SNORKEL CNG | 1 | NI |
| 4 | B041090 | RESTRACTOR FOR AIR FILTER-SNORKEL LPG | 1 | LPG/CNG |
| 5 | 940069 | AIR FILTER COVER-(UG) | 1 | |
| 6 | 920088 | CLAMP | 3 | |
| 7 | 940071 | DUST VALVE | 1 | |
| 8 | 604756 | HOSE CLIP | 1 | |
| 9 | 604553 | WORM CLIP | 1 | |
| 10 | 1A010781 | SNORKEL AIRBOX | 1 | |

18

Print Date: 07-Apr-2022

**PLATE-9**

**Complete Crankcase**

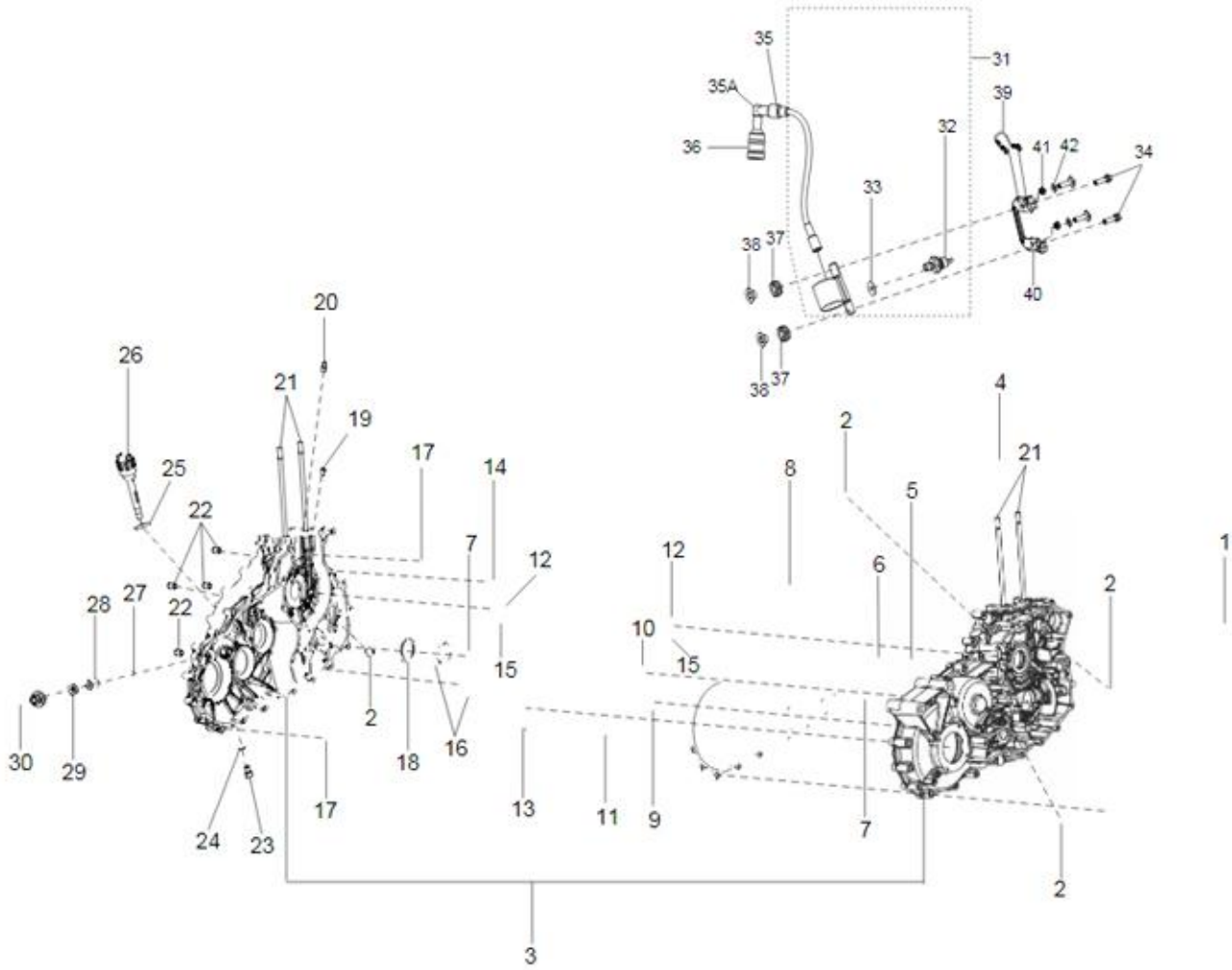
35
35A
36
31
39
32
41
42
34
33
38
37
40
38
37
20
26
21
19
25
17
14
22
7
12
28
27
22
15
2
18
16
30
29
17
24
23
13
11
9
7
2
3
4
2
21
8
5
12
6
1
2
10
15

19

Print Date: 07-Apr-2022

**PLATE-9**

**Complete Crankcase**

| Fig. No. | Part No. | Description | Qty | Remarks |
|---|---|---|---|---|
| 1 | 432142 | HEXAGONAL RANGE HEAD SCREW (M6X35) | 30 | |
| 2 | 1A011246 | TAPER THREAD PLUG | 4 | |
| 2a | 1A011246 | TAPER THREAD PLUG | 4 | STEP-2 BS3 HS LAM PTL |
| 3 | SP940097 | COUPLED CRANKCASE WITH STUB BRG BSIV-SPD | 1 | |
| 4 | 1A007774 | DOWEL | 1 | |
| 5 | 485655 | SPRING FOR OIL PRESSURE VALVE | 1 | |
| 6 | 829661 | OIL PRES.VALVE | 1 | |
| 7 | B042486 | BUSH | 2 | |
| 8 | 1A006856 | HALF-CRANKCASES GASKET | 1 | |
| 9 | 1A007028 | ROLLER BEARING | 1 | |
| 10 | 884222808 | NEEDLE BUSH 22X28X12 | 1 | |
| 11 | 7066R | RADIAL BALL BEARING | 1 | |
| 12 | 1A007663R | CRANKSHAFT STUB UPPER HALF BEARING | 2 | |
| 13 | 111353 | CIRCLIP | 1 | |
| 14 | 878941 | CONNECTION PIPE | 1 | |
| 15 | 1A007664R | CRANKSHAFT STUB LOWER HALF BEARING | 2 | |
| 16 | 1A007026 | BALL BEARING | 2 | |
| 17 | B015592 | REFERENCE DOWEL (D.9,5 H=15) | 2 | |
| 18 | 1A002685 | SEAL RING 35X47X6 | 1 | |
| 19 | 1A000612 | RETAINER SCREW - PRE COATED | 1 | |
| 20 | 1A008823 | PISTON COOLING JET | 1 | |
| 21 | B014755 | STUD SCREW | 4 | |
| 22 | 1A000708 | DOWEL (Ø7,5, H=12) | 4 | |
| 23 | 269755 | SOCKET HEAD SCREW (M8X12) | 1 | |
| 24 | 485703 | WASHER | 1 | |
| 25 | 127016015 | DIPSTICK SEALING WASHER | 1 | |
| 26 | 112898 | OIL LEVEL ARM WITH PLUG | 1 | |
| 27 | 165121014 | PIN | 1 | |
| 28 | 117401 | BUSH | 1 | |
| 29 | 117402 | OIL SEAL | 1 | |
| 30 | 1A010720 | SPEEDOMETER GEAR | 1 | |
| 30a | 1A008559 | BUSH (SPEEDOMETER GEAR) | 1 | NI |
| 31 | 1A001794 | COMPLETE H.T.COIL | 1 | |
| 32 | 1D001138 | MINIMUM PRESSURE OIL SWITCH | 1 | |
| 33 | 1A011500 | WASHER | 1 | |

**20**

Print Date: 07-Apr-2022

**PLATE-9**

**Complete Crankcase**

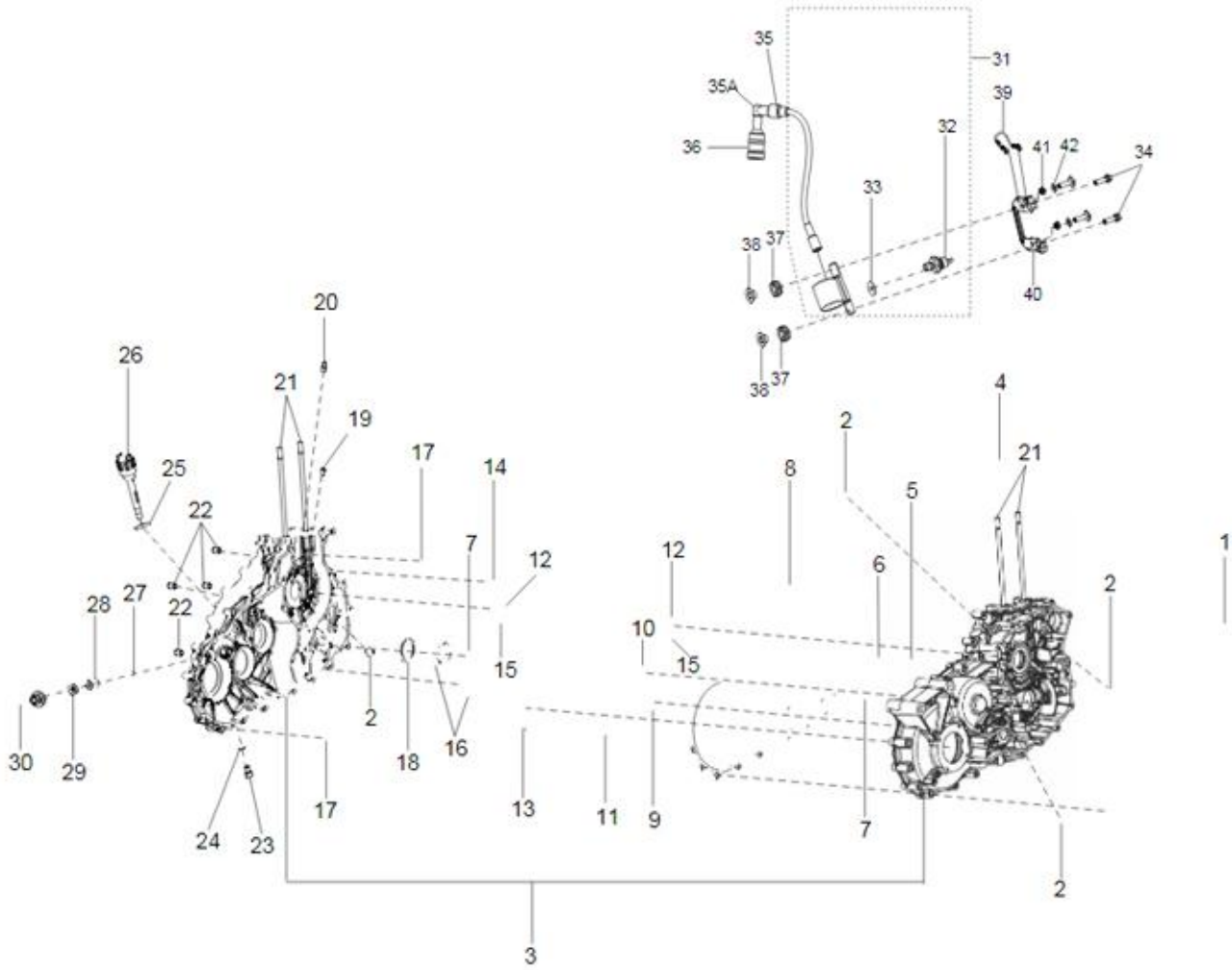
35
31
35A
39
36
32
41
42
34
33
38
37
40
38
37
20
26
21
19
4
2
17
14
21
25
8
5
22
7
12
12
6
1
28
27
22
2
10
15
15
2
30
29
18
16
13
11
9
7
17
24
23
2
3

21

Print Date: 07-Apr-2022

**PLATE-9**

**Complete Crankcase**

| Fig. No. | Part No. | Description | Qty | Remarks |
|---|---|---|---|---|
| 34 | 018639 | SCREW M6X20 | 2 | |
| 35 | 642537 | PROTECTION CAP | 1 | |
| 35A | 643149 | SPARK PLUG CAP | 1 | |
| 36 | 1A001795 | SPARK PLUG PROTECTION COLLAR | 1 | |
| 37 | B014063 | BUFFER DAMPER | 2 | |
| 38 | B014066 | SPACER | 2 | |
| 39 | 643156 | GROUND WIRE | 1 | |
| 40 | B016552 | COIL SUPPORT BRACKET WITH I.P. | 1 | |
| 41 | 872816 | FLANGED NUT | 2 | |
| 42 | 013880 | PLAIN WASHER | 2 | |

22

Print Date: 07-Apr-2022

**PLATE-10**

**Gear Sector Assembly**

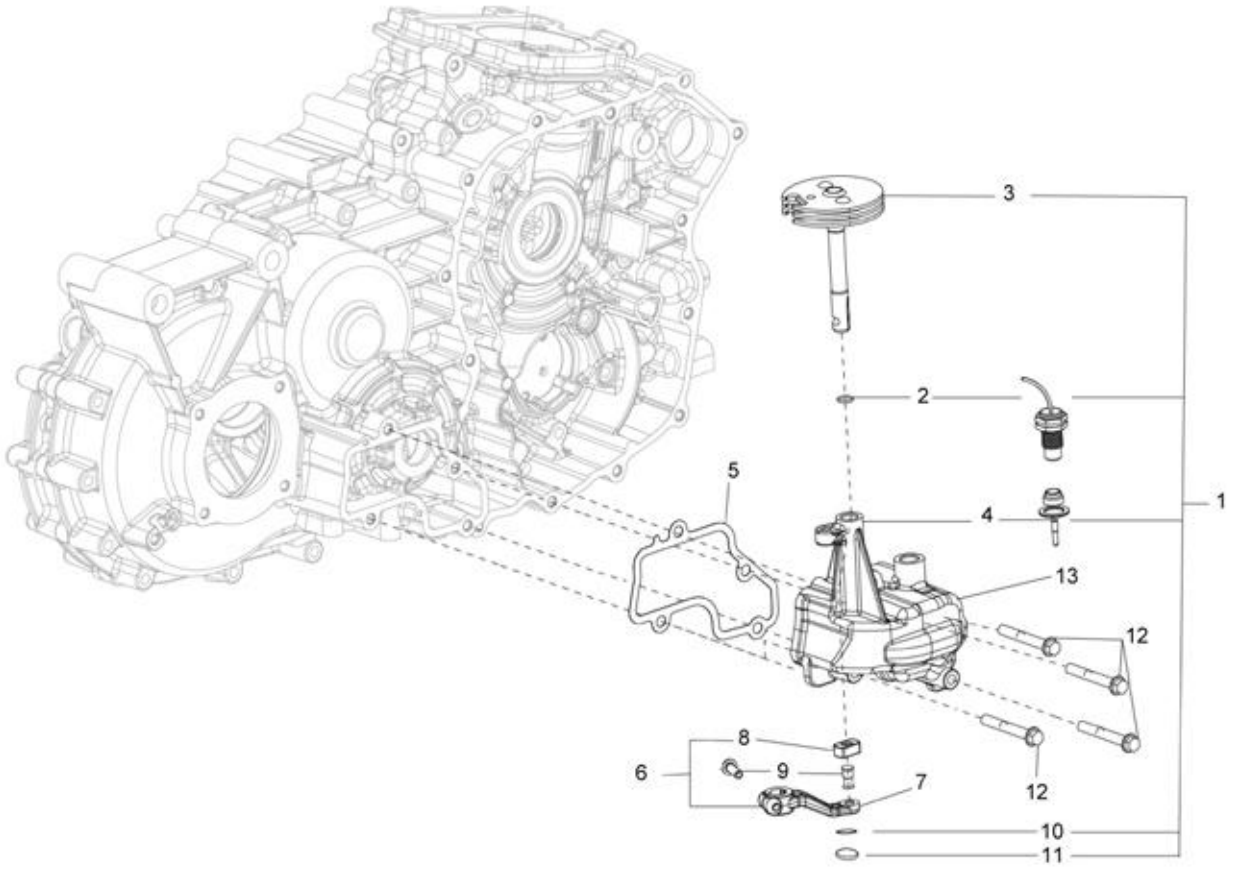
3
2
5
4
1
13
12
8
6
9
7
12
10
11

23

Print Date: 07-Apr-2022

**PLATE-10**

**Gear Sector Assembly**

| Fig. No. | Part No. | Description | Qty | Remarks |
|---|---|---|---|---|
| 1 | SP1A011195 | COMPLETE GEAR SHIFTER ASSY | 1 | |
| 1A | SP1A011650 | COMPLETE GEAR SHIFTER ASSY | 1 | STEP-2 BS3 HS LAM PTL |
| 2 | 1A005178 | O- RING | 1 | |
| 3 | 1A010035 | COMPLETE SECTOR WITH SHAFT | 1 | |
| 4 | 1A007599 | GEAR SHIFTER HOUSING | 1 | |
| 4A | 1A012182 | GEAR SHIFTER HOUSING | 1 | STEP-2 BS3 HS LAM PTL |
| 5 | 1A006859 | GASKET GEAR SHIFTER HOUSING | 1 | |
| 5A | 1A012334 | GASKET GEAR SHIFTER HOUSING | 1 | STEP-2 BS3 HS LAM PTL |
| 6 | SP1A007579 | COMPL. INVERTER LEVER SECTOR(BSIV)- SPD | 1 | |
| 7 | 1A012039 | GEAR SHIFT LEVER | 1 | |
| 8 | 1A010187 | SLIDER BLOCK | 1 | |
| 9 | 1A012011 | PIN | 1 | |
| 10 | 009101 | SEEGER RING | 1 | |
| 11 | 1A006701 | LOCK WASHER | 1 | |
| 12 | 1A003060 | FLANGED HEX. HEAD SCREW M6X45 | 4 | |
| 13 | 1A010008 | GEAR SHIFTER HOUSING | 1 | |

**24**

Print Date: 07-Apr-2022

**PLATE-11**

**Cylinder Head With I.P.**

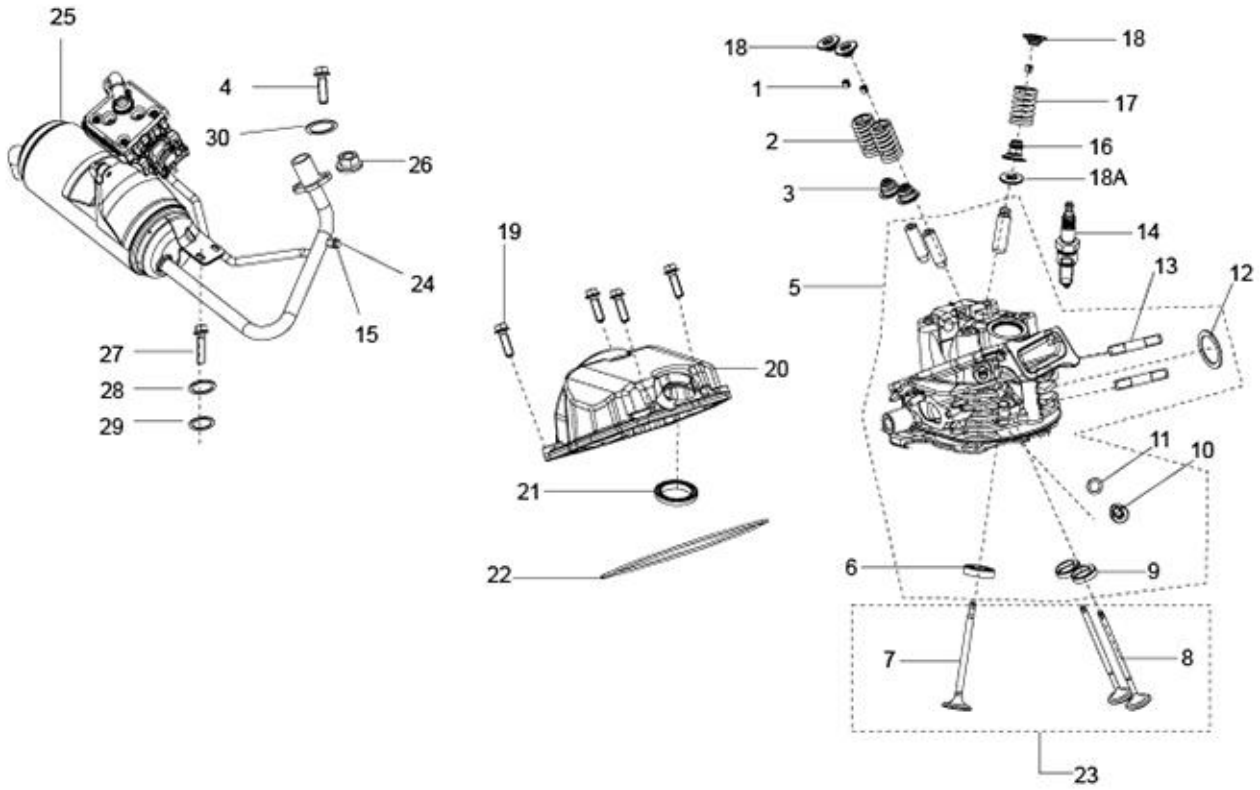
25
4
30
26
24
15
27
28
29
19
20
21
22
18
1
2
3
5
18
17
16
18A
14
13
12
11
10
6
9
7
8
23

25

Print Date: 07-Apr-2022

**PLATE-11**

**Cylinder Head With I.P.**

| Fig. No. | Part No. | Description | Qty | Remarks |
|---|---|---|---|---|
| 1 | B015288 | HALF-CONE | 3 | |
| 2 | B014706 | VALVE SPRING (INTAKE) | 2 | |
| 3 | 843307 | VALVE SEAL RING | 2 | |
| 4 | 31089 | HEX HEAD SCREW M6X18 CL 8.8 | 2 | |
| 5 | SP1A012928 | CYLINDER HEAD ASSY | 1 | |
| 6 | B017336 | EXHAUST VALVE SEAT | 1 | |
| 7 | B017438 | EXHAUST VALVE Ø22 | 1 | |
| 8 | B014684 | INTAKE VALVE Ø20 | 2 | |
| 9 | B017230 | INTAKE VALVE SEAT | 2 | |
| 10 | 269755 | SOCKET HEAD SCREW (M8X12) | 1 | |
| 11 | 485703 | WASHER | 1 | |
| 12 | 434716 | CYLINDER HEAD/MUFFLER GASKET | 1 | |
| 13 | B016368 | SPECIAL STUD | 2 | |
| 14 | 643367 | SPARK PLUG | 1 | |
| 15 | 433122 | SCREW M10X6 | 1 | |
| 16 | 83054R | VALVE SEAL RING | 1 | |
| 17 | B014705 | VALVE SPRING (EXHAUST) | 1 | |
| 18 | B017456 | UPPER CUP | 3 | |
| 18A | 483711 | LOWER CUP | 1 | |
| 19 | 1A002691 | FLANGED HEX HEAD SCREW M6X20 CL10 | 4 | |
| 20 | 1A006545 | HEAD COVER | 1 | |
| 21 | B014732 | SPARK PLUG HOLE GASKET | 1 | |
| 22 | B018533 | CYLINDER HEAD COVER GASKET | 1 | |
| 23 | KIT1U000020 | SET OF VALVES | 1 | |
| 24 | - | NOT SERVICEABLE | 1 | NS |
| 25 | 1A015723R | COMPLETE MUFFLER-CNG | 1 | ECN No. 500000255565 |
| 25A | 1A009706 | COMPLETE MUFFLER | 1 | STEP-2 BS3 HS LAM PTL |
| 25 | 1A009125 | COMPLETE MUFFLER-LPG | 1 | |
| 26 | 436947 | FLANGED NUT M7X1 H=8 | 2 | |
| 27 | 30074 | HEX HEAD BOLT M8 X 40 CL 8.8 | 2 | |
| 28 | 016408 | SPRING WASHER | 2 | |
| 29 | 3056 | PLAIN WASHER M6 OD12 | 2 | |
| 30 | 016406 | SPRING WASHER | 2 | |

**26**

Print Date: 07-Apr-2022

**PLATE-12**
**Crankshaft Assembly**

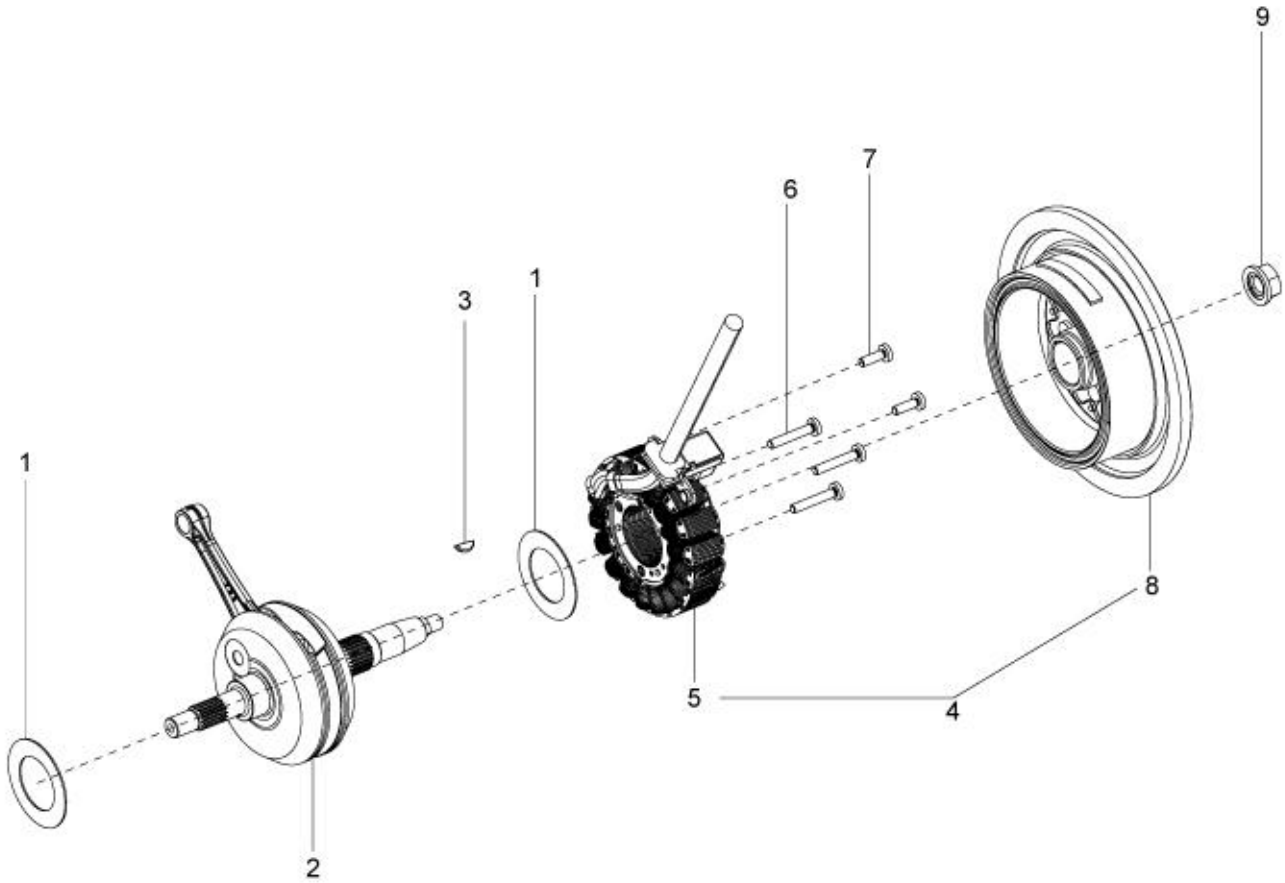
9
7
6
1
3
1
8
5
4
2

27

Print Date: 07-Apr-2022

**PLATE-12**

**Crankshaft Assembly**

| Fig. No. | Part No. | Description | Qty | Remarks |
|---|---|---|---|---|
| 1 | B016144 | WASHER | 2 | |
| 2 | 1A010150 | CRANKSHAFT ASSEMBLY | 1 | |
| 3 | 000267 | WOODRUFF KEY | 1 | |
| 4 | 1D001847 | COMPLETE A.C.GENERATOR | 1 | |
| 5 | ---- | COMPLETE STATOR | 1 | NS |
| 6 | 1A001073 | TORX HEAD SCREW M5X16 | 3 | |
| 7 | 1A013159 | TORX HEAD SCREW M5X22 | 2 | |
| 8 | 1A008672 | ROTAR ASSY WITH HUB | 1 | |
| 9 | 1A006988 | NUT WITH SPRING WASHER | 1 | |
| 10 | 1A006002 | DOWEL | 1 | NI |

**28**

Print Date: 07-Apr-2022

**PLATE-13**

**Aircooling Circuit Components**

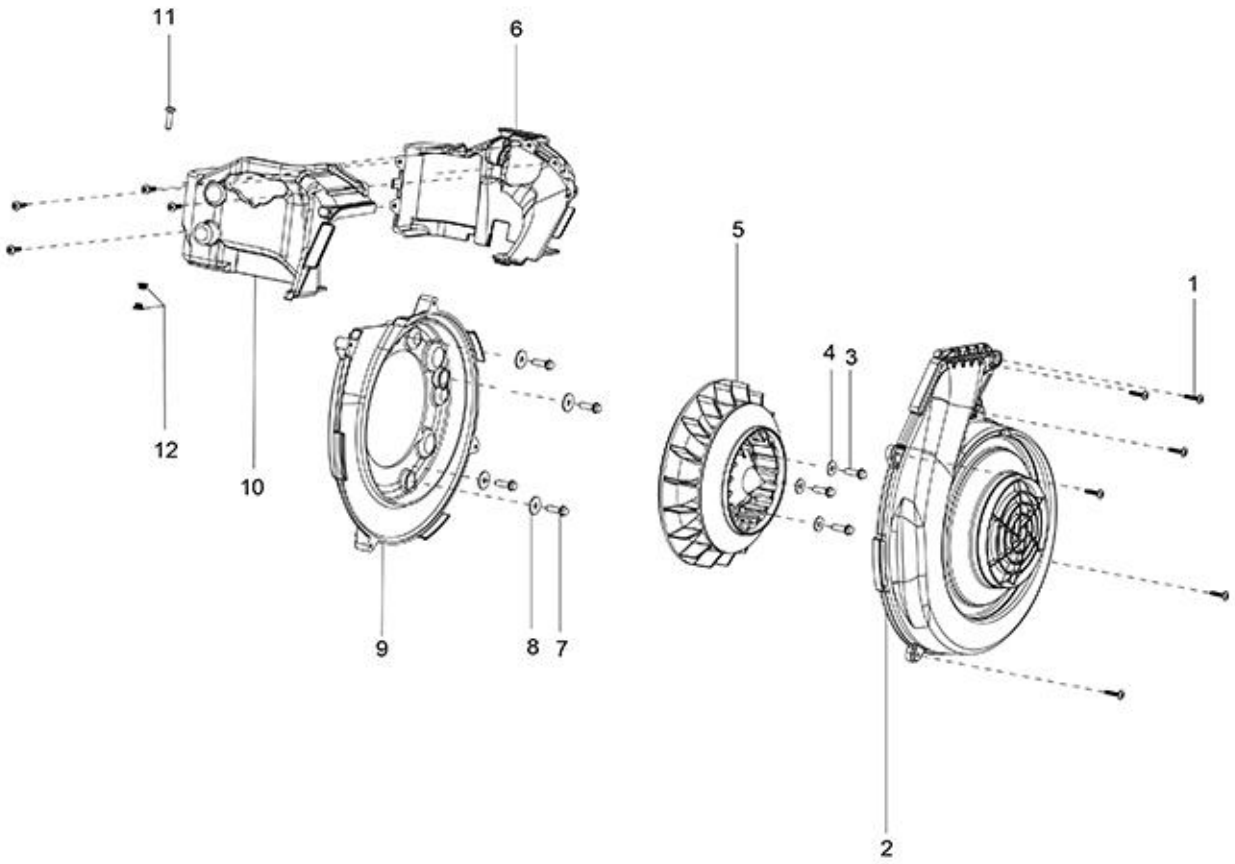
11
6
5
1
4
3
12
10
9
8
7
2

29

Print Date: 07-Apr-2022

**PLATE-13**

**Aircooling Circuit Components**

| Fig. No. | Part No. | Description | Qty | Remarks |
|---|---|---|---|---|
| 1 | 1A000024 | SELF TAPPING SCREW (3X20) | 10 | |
| 2 | 1A010001 | FAN COVER | 1 | |
| 3 | 1A002691 | FLANGED HEX HEAD SCREW M6X20 CL10 | 3 | |
| 4 | B019047 | WASHER | 3 | |
| 5 | 1A000831 | ASSY FAN | 1 | |
| 6 | 1A006740 | SHROUD EXHAUST SIDE | 1 | |
| 7 | 018639 | SCREW M6X20 | 4 | |
| 8 | B016192 | WASHER 6.2X20X2 | 4 | |
| 9 | 1A006742 | FAN COVER SUPPORT | 1 | |
| 10 | 1A006743 | COMPLETE SHROUD INTAKE SIDE | 1 | |
| 11 | B016620 | SCREW WITH CYLINDRICAL HEAD M5X21 | 1 | |
| 12 | B018262 | KNURLED BUSH | 2 | |

**30**

Print Date: 07-Apr-2022

**PLATE-14**
**Timing Group**

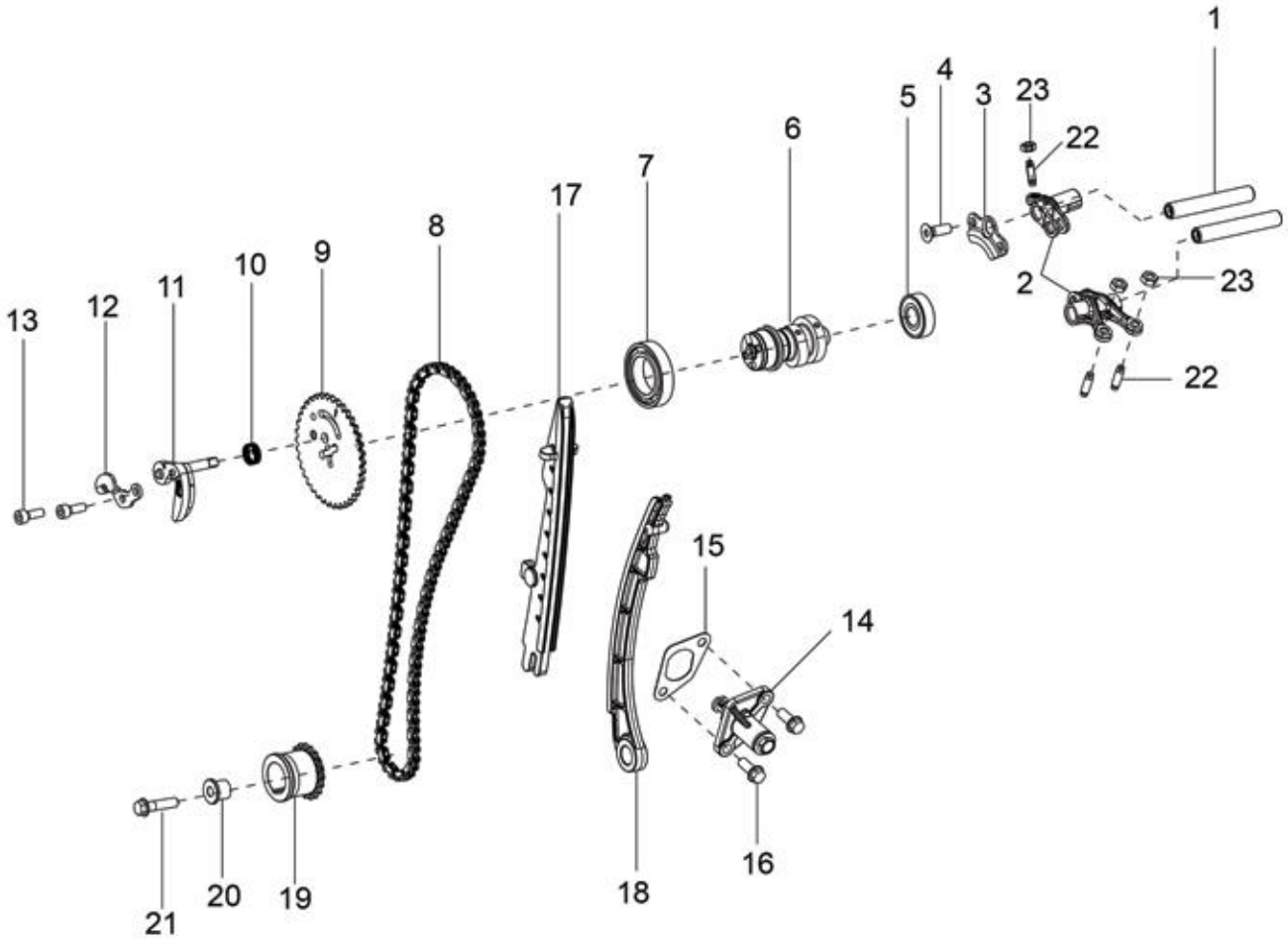
1
4
5
3
23
22
6
7
17
8
9
10
11
12
13
2
23
22
15
14
16
18
21
20
19

31

Print Date: 07-Apr-2022

**PLATE-14**

**Timing Group**

| Fig. No. | Part No. | Description | Qty | Remarks |
|---|---|---|---|---|
| 1 | B017113 | ROCKER ARM SHAFT | 2 | |
| 2 | 1A013013 | ROCKER ARM GROUP | 1 | |
| 3 | B014760 | CAMSHAFT CONTAINMENT SHEET-STEEL | 1 | |
| 4 | B018946 | COUNTERSUNK SCREW M6X18 | 1 | |
| 5 | 83040R | DEEP GROOVE BALL BEARING | 1 | |
| 6 | B017746 | CAMSHAFT WITH I.P. | 1 | |
| 7 | 83041R | DEEP GROOVE BALL BEARING | 1 | |
| 8 | 1A015692 | TIMING CHAIN SOUNDLESS TYPE | 1 | |
| 9 | 1A002358 | TIMING CROWN | 1 | |
| 10 | B015483 | DECOMPRESSION SPRING | 1 | |
| 11 | SP1A006405 | CENTRIFUGAL MASS WITH I.P. | 1 | |
| 12 | 1A008397 | CENTRIFUGAL MASS CONTAINMENT SHEET | 1 | |
| 13 | B018718 | EXAG. SOCKET CYLIND.HEAD SCREW M5X14 | 2 | |
| 14 | B017165 | CHAIN TENSIONER DEVICE | 1 | |
| 15 | 847928 | CHAIN SUPPORT GASKET | 1 | |
| 16 | 434541 | SCREW | 2 | |
| 17 | 1A006899 | FIXED PAD | 1 | |
| 18 | 1A006901 | CHAIN TIGHTENING ROD | 1 | |
| 19 | 1A007565 | TIMING PINION | 1 | |
| 20 | 485868 | SPACER FOR CHAIN TIGHTNING ROD | 1 | |
| 21 | B016774 | FLANGED HEXAGONAL SCREW M6X25 | 1 | |
| 22 | B017323 | VALVE ADJUSTMENT SCREW | 3 | |
| 23 | B017431 | ROCKER ARM NUT | 3 | |

32

Print Date: 07-Apr-2022

**PLATE-15**

**Cylinder- Piston Group**

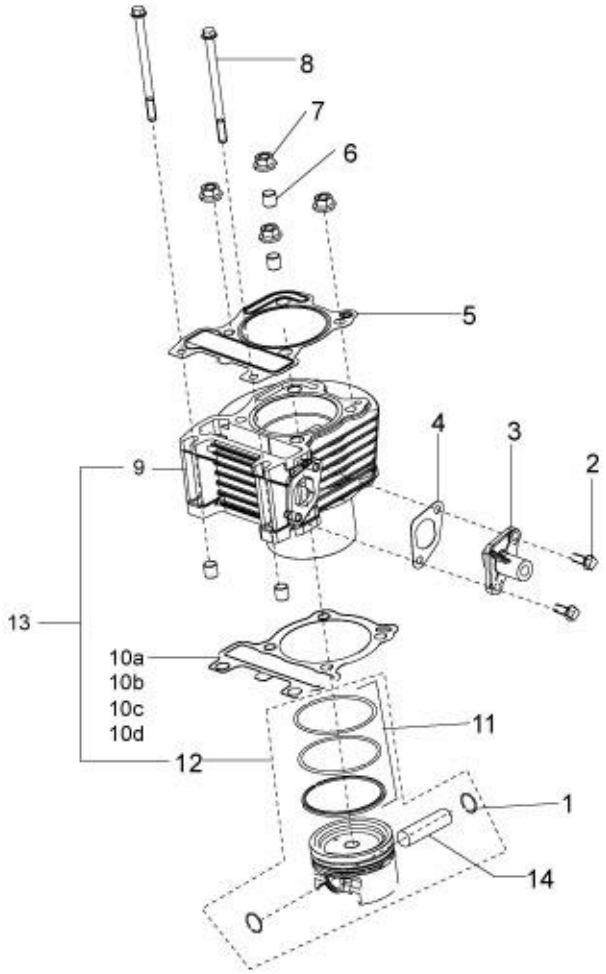
8
7
6
5
4
3
2
9
13
10a
10b
10c
10d
11
12
1
14

33

Print Date: 07-Apr-2022

**PLATE-15**

**Cylinder- Piston Group**

| Fig. No. | Part No. | Description | Qty | Remarks |
|---|---|---|---|---|
| 1 | 963486 | CIRCLIP FOR PISTON WRIST | 2 | |
| 2 | 434541 | SCREW | 2 | |
| 3 | B017165 | CHAIN TENSIONER DEVICE | 1 | |
| 4 | 847928 | CHAIN SUPPORT GASKET | 1 | |
| 5 | B014555 | HEAD CYLINDER GASKET | 1 | |
| 6 | 435571 | REFERENCE DOWEL | 4 | |
| 7 | B016939 | FLANGED NUT M8X1.25 | 4 | |
| 8 | B018854 | HEXAGONAL HEAD FLANGED SCREW M6X90 | 2 | |
| 9 | KIT1U000025 | BLOCK PISTON KIT | 1 | |
| 10a | CM284001 | CRANKCASE/CYLINDER GASKET (0.4) | 1 | |
| 10b | CM284002 | CRANKCASE/CYLINDER GASKET (0.6) | 1 | |
| 10c | CM284003 | CRANKCASE/CYLINDER GASKET (0.8) | 1 | |
| 10d | CM284004 | CRANKCASE/CYLINDER GASKET (1.0) | 1 | |
| 11 | 1A009621R | PISTON RING GROUP | 1 | |
| 12 | KIT1U000024 | PISTON ASSEMBLY | 1 | NS- Service under BP Kit |
| 13 | KIT1U000025 | BLOCK PISTON KIT | 1 | |
| 14 | 482335 | PISTON PIN | 1 | |

34

Print Date: 07-Apr-2022

**PLATE-16**

**Electric Starting Group**

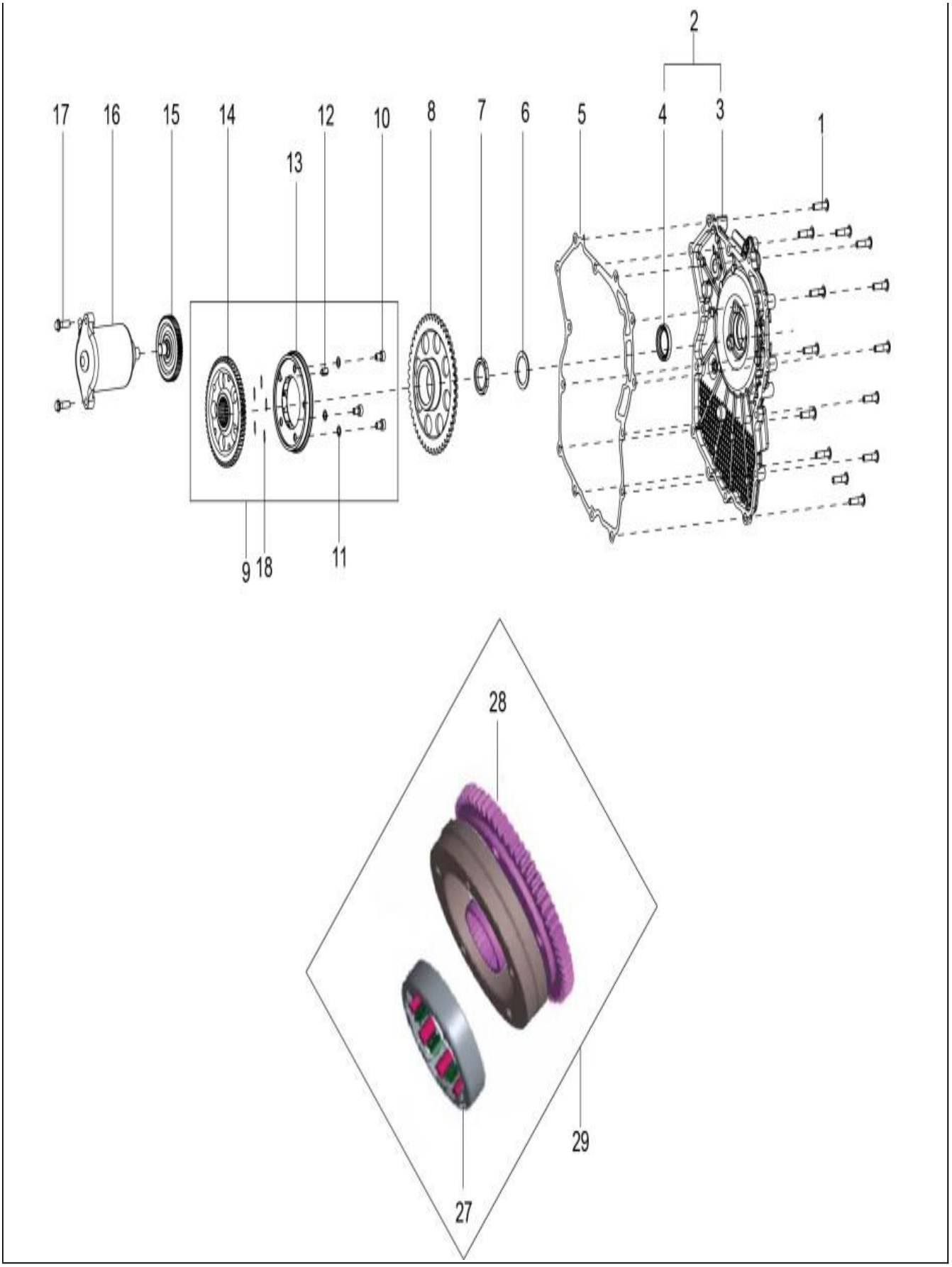
2
17
16
15
14
12
10
8
7
6
5
4
3
1
13
9
18
11
28
29
27

35

Print Date: 07-Apr-2022

**PLATE-16**

**Electric Starting Group**

| Fig. No. | Part No. | Description | Qty | Remarks |
|---|---|---|---|---|
| 1 | B018853 | FLANGED HEXAGONAL HEAD SCREW M6X30 | 14 | |
| 2 | SP1A007045 | STARTER COVER WITH I.P. | 1 | |
| 3 | 1A006751 | STARTER COVER | 1 | |
| 4 | B016120 | SEAL RING 25X35X7 | 1 | |
| 5 | 1A006858 | STARTER COVER GASKET | 1 | |
| 6 | B016148 | WASHER | 1 | |
| 7 | 1A021204 | RING NUT | 1 | |
| 8 | 1A001187R | TOOTHED CROWN ELECTRIC STARTER | 1 | NS-Order on modi.assy.P/N.SP1A018746 INA |
| 9 | 1D001846 | COMPLETE STATOR | 1 | |
| 10 | 1A000402 | SOCKET HEAD SCREW | 3 | NS-Order on modi.assy.P/N.SP1A018746 INA |
| 11 | B019420 | CONICAL SPRING KNURLED WASHER | 3 | NS-Order on modi.assy.P/N.SP1A018746 INA |
| 12 | 1A000742 | ELASTIC PIN | 1 | NS-Order on modi.assy.P/N.SP1A018746 INA |
| 13 | 1A010696R | ONE WAY CLUTCH | 1 | NS-Order on modi.assy.P/N.SP1A018746 INA |
| 14 | 1A008715 | CUM CLUTCH HUB | 1 | NS-Order on modi.assy.P/N.SP1A018746 INA |
| 15 | B017189 | ELECTRIC STARTER INTERMED GEAR WITH P.I. | 1 | |
| 16 | 1D000425R | STARTER MOTOR | 1 | |
| 17 | B016774 | FLANGED HEXAGONAL SCREW M6X25 | 2 | |
| 18 | 1A014399 | ONE WAY CLUTCH SPRING | 1 | Texspin one way clutch |
| 18 | 1A002661 | PLANE SPRING - CLUTCH ASSY | 5 | only for Ducati. Not app. for INA Clutch |
| 19 | 1A009586 | REAR BRACKET ASSY | 1 | NI |
| 20 | 1A009587 | BRUSH ASSLY KIT (+VE & -VE) | 1 | NI |
| 21 | 1A009588 | ARMATURE ASSLY | 1 | NI |
| 22 | 1A009589 | YOKE ASSLY | 1 | NI |
| 23 | 1A009590 | FRONT BRACKET ASSLY | 1 | NI |
| 24 | 1A009591 | HEXAG. HEAD SCREW | 1 | NI |
| 25 | 1A009592 | O-RING KIT | 1 | NI |
| 26 | 1A009593 | THRUST WASHER KIT | 1 | NI |
| 27 | 1A020456 | ONE WAY CLUTCH ASSY | 1 | NEW MODI. INA ONE WAY CLUTCH |
| 28 | 1A018212 | CUM CLUTCH HUB | 1 | NEW MODI. INA ONE WAY CLUTCH |
| 29 | SP41A020456 | ONE WAY CLUTCH HUB ASSY - 230CC SPD | 5 | Consists of 27/28. |

36

Print Date: 07-Apr-2022

**PLATE-17**

**Speed Gear Group**

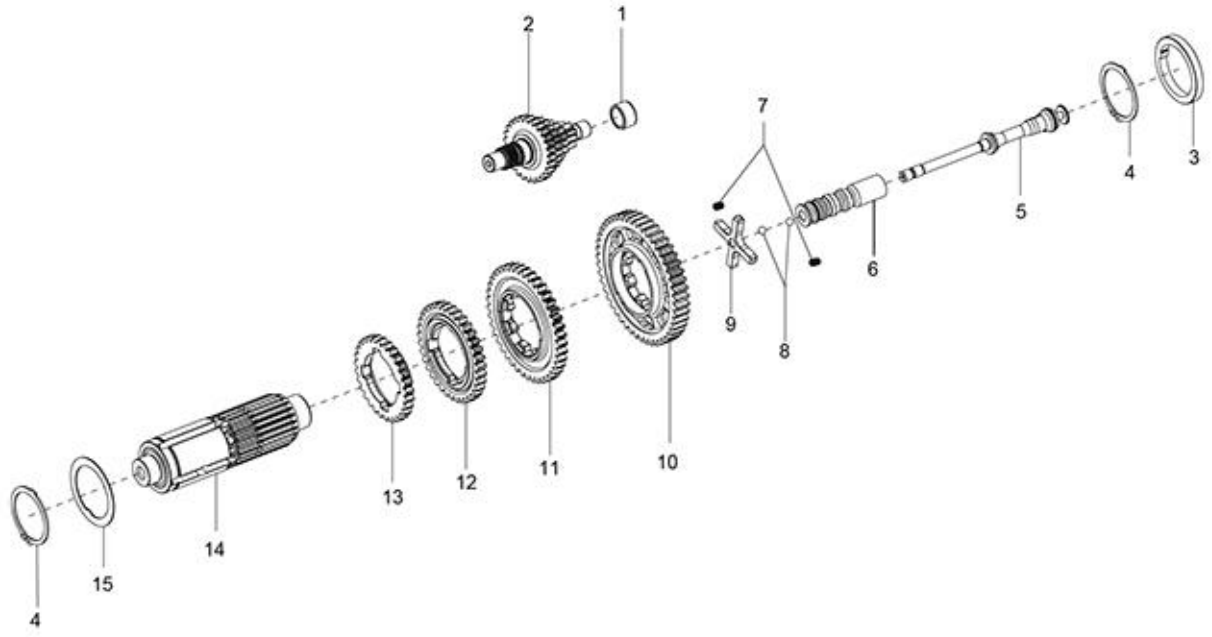
2
1
7
4
3
5
6
9
8
10
11
12
13
14
15
4

37

Print Date: 07-Apr-2022

**PLATE-17**

**Speed Gear Group**

| Fig. No. | Part No. | Description | Qty | Remarks |
|---|---|---|---|---|
| 1 | 122032014 | INNER RING - CLUSTER GEAR | 1 | |
| 2 | 1A011044 | CLUSTER GEAR | 1 | |
| 3 | 1A007029 | LOCK WASHER | 1 | |
| 4 | 009101 | SEEGER RING | 1 | |
| 5 | 1A006687 | STEM | 1 | |
| 6 | 1A012846 | BUSH GEAR SHIFTER | 1 | |
| 7 | 1A006970 | SPRING | 2 | |
| 8 | 002139 | BALL | 2 | |
| 9 | 1A010166 | CROSS | 1 | |
| 10 | 1A010160 | SPEED GEAR 1ST | 1 | |
| 11 | 1A010161 | SPEED GEAR 2ND | 1 | |
| 12 | 1A010162 | SPEED GEAR 3RD | 1 | |
| 13 | 1A011289 | SPEED GEAR 4TH | 1 | |
| 14 | 1A010159 | SECONDARY GEAR SHAFT | 1 | |
| 15 | 1A006115 | LOCK WASHER | 1 | |

38

Print Date: 07-Apr-2022

**PLATE-18**
**Engine Support**

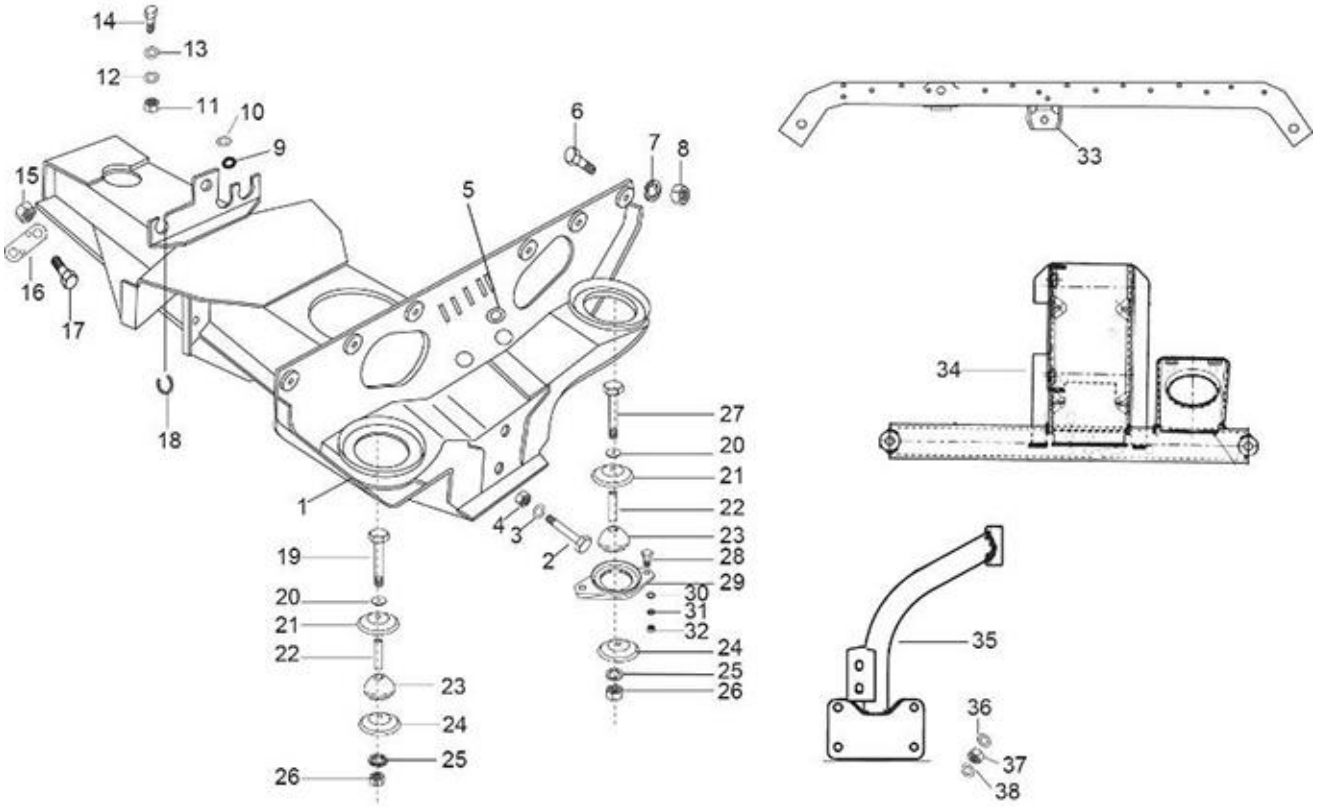
14
13
12
11
10
9
15
16
17
18
6
7
8
5
1
4
3
2
19
20
21
22
23
24
25
26
27
28
29
30
31
32
33
34
35
36
37
38

39

Print Date: 07-Apr-2022

**PLATE-18**

**Engine Support**

| Fig. No. | Part No. | Description | Qty | Remarks |
|---|---|---|---|---|
| 1 | B075798 | FRAME ASSY. SUSPENSION & ENGINE SUPPORT | 1 | |
| 2 | 568689 | HEX HEAD BOLT M10X100 | 2 | |
| 3 | 286328 | PLAIN WASHER 20X10.2X2 | 2 | |
| 4 | 231370 | SELF BREAKING NUT M10 | 2 | |
| 5 | 15478 | GROMMET4 | 2 | |
| 6 | 31119 | HEX HD SCREW M8 X 25 | 6 | |
| 7 | 016408 | SPRING WASHER | 6 | |
| 8 | 20108 | HEX NUT M8 | 6 | |
| 9 | 178610 | GROMMET | 1 | |
| 10 | 016406 | SPRING WASHER | 2 | |
| 11 | 20108 | HEX NUT M8 | 2 | |
| 12 | 016408 | SPRING WASHER | 2 | |
| 13 | 2383 | PLAIN WASHER M20X8.5X2 | 2 | |
| 14 | 31119 | HEX HD SCREW M8 X 25 | 2 | |
| 15 | 231370 | SELF BREAKING NUT M10 | 2 | |
| 16 | 632299 | PLATE | 2 | |
| 16 | 632299 | PLATE | 1 | |
| 17 | 632247 | HEX HDD SCREW M10X30 CC8.8 | 2 | |
| 18 | 568140 | GROMMET | 1 | |
| 19 | 604948 | HEX.HDD BOLT M8 X 110 WITH POINTING | 2 | |
| 20 | 2383 | PLAIN WASHER M20X8.5X2 | 3 | |
| 21 | 569375 | PLATE | 3 | |
| 22 | 267065 | SPACER FRONT | 2 | |
| 23 | 265091 | DUMPER ENGINE MTG. | 2 | |
| 24 | 569244 | PLATE | 3 | |
| 25 | 016408 | SPRING WASHER | 3 | |
| 26 | 15335 | HEX HD NUT M8 | 2 | |
| 27 | 272178 | HEX. HDD BOLT M8 X 122 CL 10.9 | 1 | |
| 28 | 31154 | HEX HDD SCREW M10X22 CL 8.8 | 2 | |
| 29 | B003286 | REAR AVM SUPPORT BKT. ASSY. | 1 | |
| 30 | 286328 | PLAIN WASHER 20X10.2X2 | 2 | |
| 31 | 16410 | SPRING WASHER | 2 | |
| 32 | 20108 | HEX NUT M8 | 4 | |
| 33 | B075595 | CROSS MEMBER ENGINE MTG REAR | 1 | |
| 34 | B075459 | FRT CROSS MEMBER ASSY. ENG. MTG. | 1 | |

40

Print Date: 07-Apr-2022

**PLATE-18**
**Engine Support**

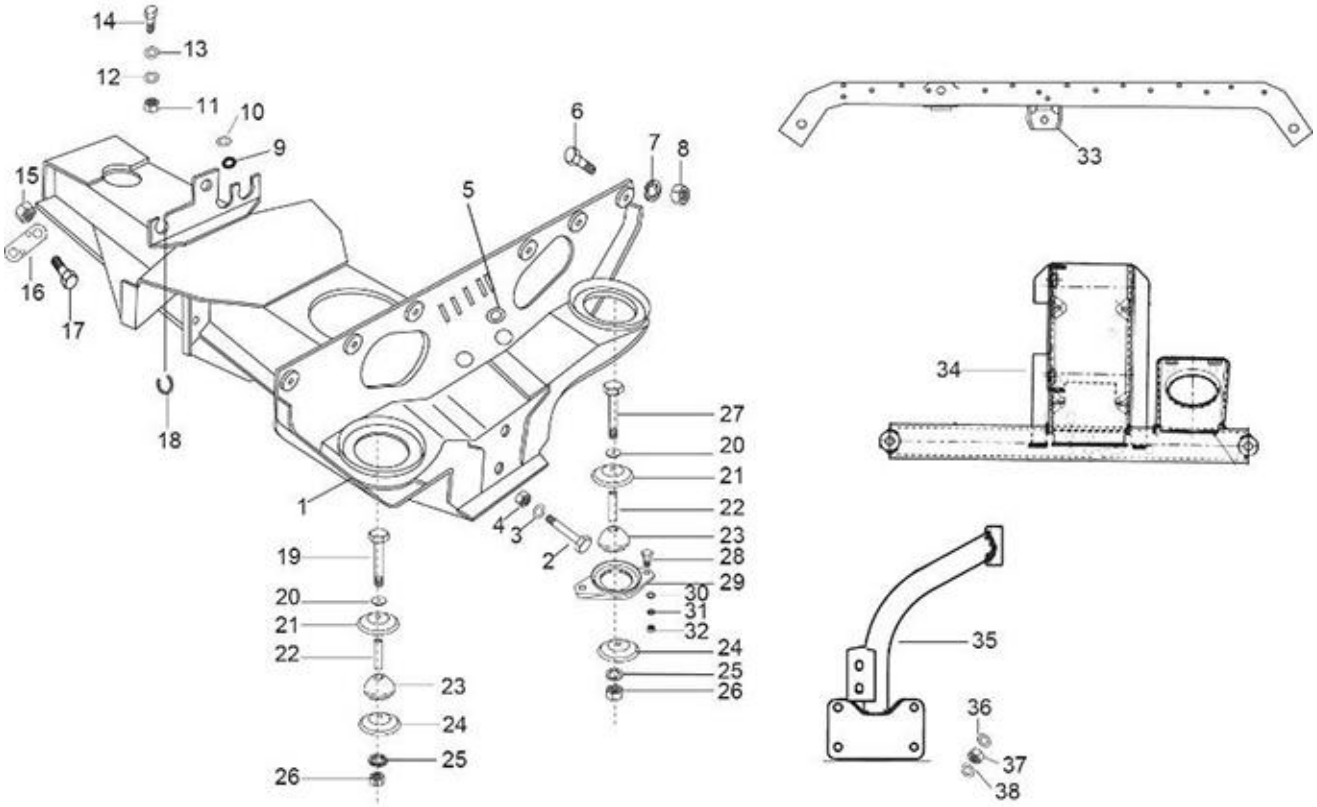
14
13
12
11
10
9
15
16
17
18
6
7
8
5
1
4
3
2
19
20
21
22
23
24
25
26
27
28
29
30
31
32
33
34
35
36
37
38

41

Print Date: 07-Apr-2022

**PLATE-18**
**Engine Support**

| Fig. No. | Part No. | Description | Qty | Remarks |
|---|---|---|---|---|
| 35 | B075593 | BKT SUB ASSLY ENGINE SUPPORT REAR | 1 | |
| 36 | 286328 | PLAIN WASHER 20X10.2X2 | 2 | |
| 37 | 20110 | HEX NUT M10 | 4 | |
| 38 | 16410 | SPRING WASHER | 2 | |
| 39 | B076295 | PROTECTION BELLOW- GEAR CABLE | 1 | NI |

42

Print Date: 07-Apr-2022

**PLATE-19**

**Fuel Tank/Filter/Fuel Pipes**

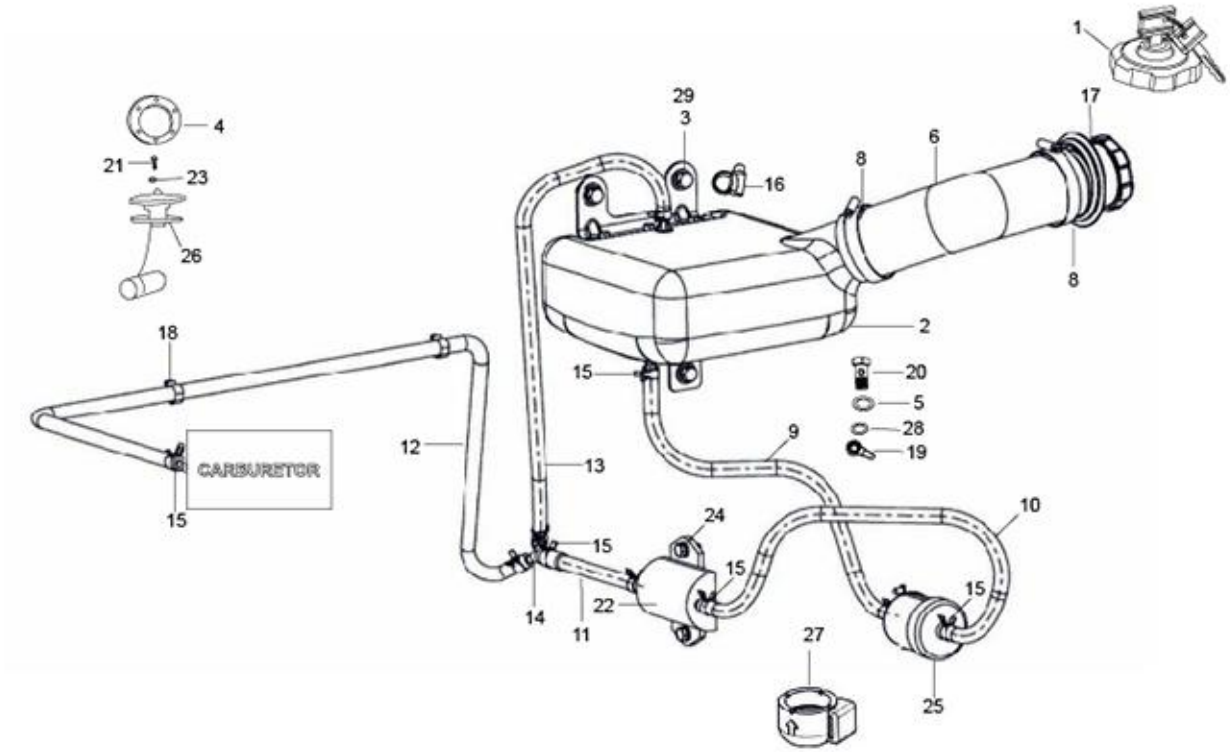
1
17
29
3
4
6
8
16
21
23
26
8
2
18
15
20
5
28
19
9
12
13
CARBURETOR
15
10
24
15
15
15
22
14
11
27
25

43

Print Date: 07-Apr-2022

**PLATE-19**

**Fuel Tank/Filter/Fuel Pipes**

| Fig. No. | Part No. | Description | Qty | Remarks |
|---|---|---|---|---|
| 1 | B024168 | P.T.CAP ASSLY WITH KEY | 1 | |
| 2 | B073829 | FUEL TANK ASSY.-PETROL | 1 | |
| 2 | B042390 | FUEL TANK ASSY. PLASTIC (LPG/CNG) | 1 | |
| 3 | 3068 | PLAIN WASHER | 4 | |
| 4 | 652105 | RUBBER PACKING PRIMARY FUEL FILTER (PETROL & CNG/LPG) | 1 | |
| 5 | 013880 | PLAIN WASHER | 4 | |
| 6 | B075253 | NECK HOSE FUEL TANK | 1 | |
| 7 | B003115 | TUBE FUEL TANK FILLER ASSY | 1 | |
| 8 | 604756 | HOSE CLIP | 2 | |
| 9 | B076750 | FUEL TANK TO FUEL FILTER | 1 | CNG/LPG |
| 9 | B073835 | FUEL PIPE FUEL TANK TO FUEL FILTER | 1 | PTL |
| 10 | B073837 | FUEL PIPE FUEL FILTER TO FEED PUMP | 1 | PTL |
| 11 | B076749 | FUEL PIPE FEED PUMP TO Y- CONNECTOR | 1 | CNG/LPG |
| 12 | B024892 | Y CONT. TO CARBURETTOR - CNG/LPG | 1 | PTL |
| 12 | B076752 | FUEL PIPE - FUEL FILTER TO CARBURATOR-CNG/LPG | 1 | |
| 13 | B076753 | Y CONNECTOR TO FUEL ANK RETURN - CNG/LPG | 1 | |
| 13 | B076753 | Y CONNECTOR TO FUEL ANK RETURN - CNG/LPG | 1 | CNG/LPG |
| 14 | 644824 | THREE WAY 'Y' CONNECTOR - CNG/LPG | 1 | |
| 15 | 632109 | HOSE CLAMP BRAKE PIPE | 8 | |
| 16 | B003929 | FLY SPRING (CNG/LPG) | 2 | |
| 17 | B003115 | TUBE FUEL TANK FILLER ASSY | 1 | CNG/LPG |
| 18 | 569504 | CLAMP | 2 | |
| 19 | 604908 | BANJO | 1 | PTL |
| 20 | 604909 | BANJO BOLT (M14X1.5) | 1 | PTL |
| 21 | 31056 | HEX HEAD SCREW M5 X 12 CL. 8.8 | 6 | |
| 22 | B002630 | ELECTRICAL FEED PUMP LGA 280 PETROL ENGI | 1 | Old Type |
| 22 | 6A001657 | ASSY ELE. FUEL PUMP (PRICOL) | 1 | New Type-Can be Interchangeable with Old Type |
| 22 | 6D001087 | PIGTAIL, FUEL FEED PUMP(PRICOL) | 1 | New Type-Can be Interchangeable with Old Type |
| 23 | 16405 | SPRING WASHER M5 | 6 | |
| 24 | 31088 | HEX HD SCREW M6 X 16 CL 8.8 (811061623) | 2 | |
| 25 | 616738R | FUEL FILTER | 1 | |
| 26 | 567878R | TANK UNIT | 1 | |
| 27 | 652105 | RUBBER PACKING PRIMARY FUEL FILTER (PETROL & CNG/LPG) | 1 | |
| 28 | 217280 | CLAMP | 4 | |
| 29 | 31088 | HEX HD SCREW M6 X 16 CL 8.8 (811061623) | 4 | |

44

Print Date: 07-Apr-2022

**PLATE-19**

**Fuel Tank/Filter/Fuel Pipes**

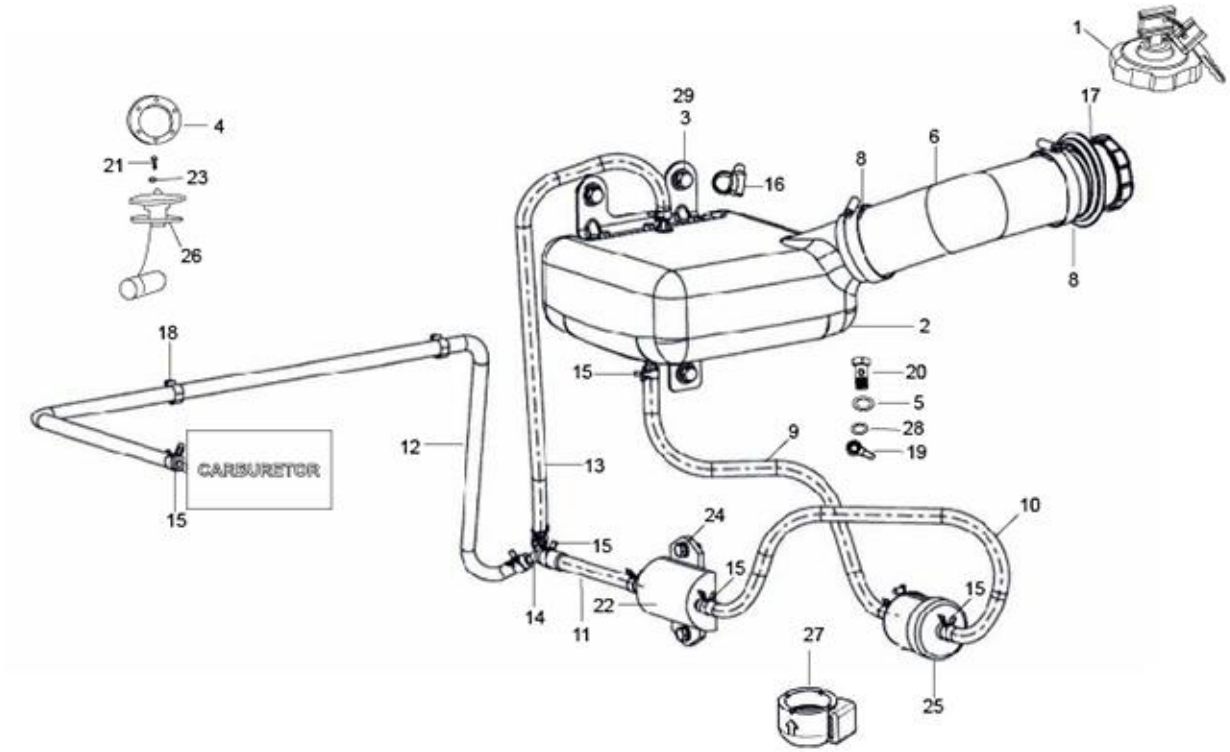
1
17
29
3
4
6
8
16
21
23
26
8
2
18
15
20
5
28
19
9
12
13
CARBURETOR
15
10
24
15
15
15
22
14
11
27
25

45

Print Date: 07-Apr-2022

**PLATE-19**

**Fuel Tank/Filter/Fuel Pipes**

| Fig. No. | Part No. | Description | Qty | Remarks |
|---|---|---|---|---|
| 29 | B075790 | FUEL FILTER SUPPORT | 1 | |
| 30 | B075337 | FUEL PIPE-TANK TO SMALL FILTER-CITY PTL | 1 | PTl |

46

Print Date: 07-Apr-2022

**PLATE-20**
**Wind Shield/Glass/Beading**

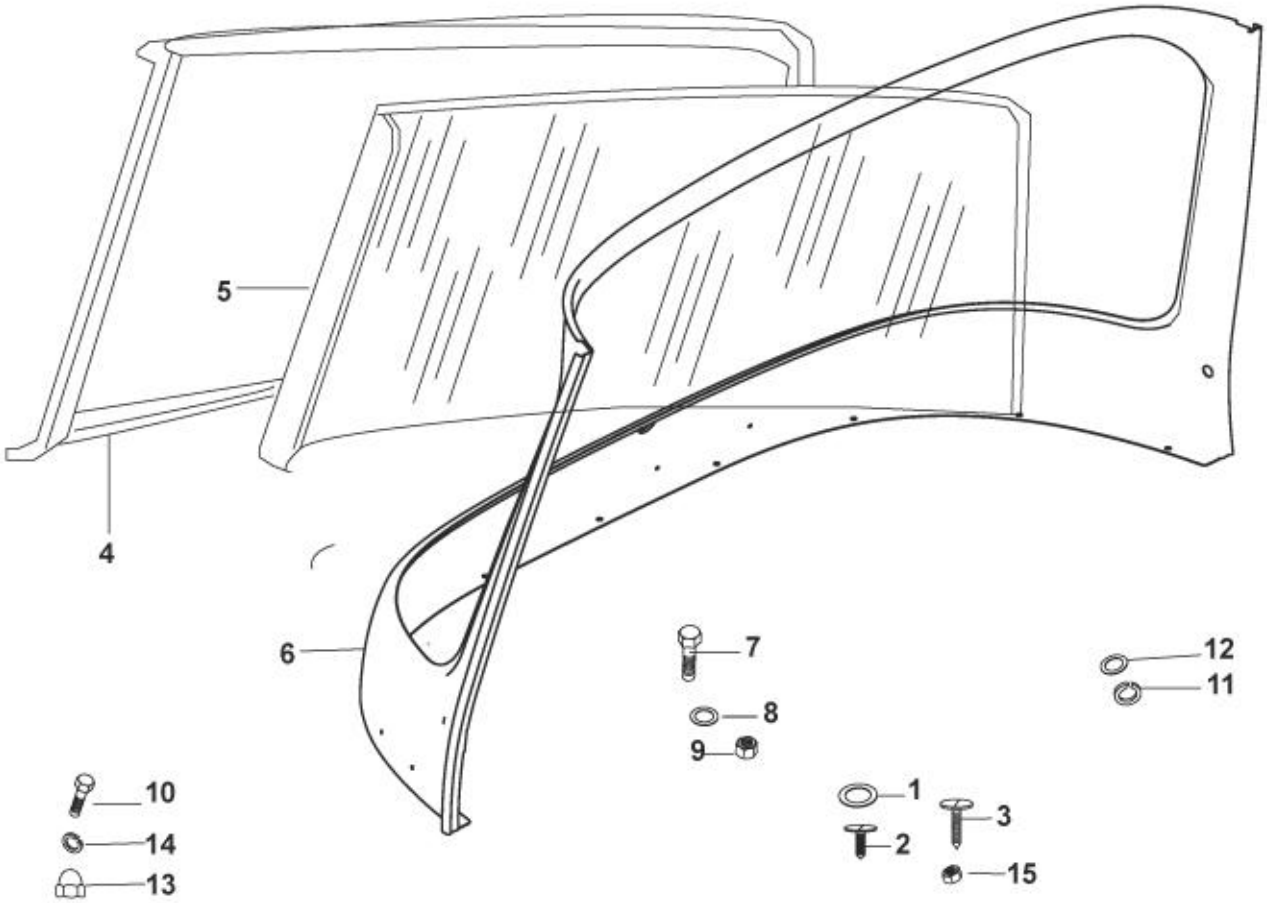
5
4
6
7
8
9
12
11
10
14
13
1
2
3
15

47

Print Date: 07-Apr-2022

**PLATE-20**

**Wind Shield/Glass/Beading**

| Fig. No. | Part No. | Description | Qty | Remarks |
|---|---|---|---|---|
| 1 | 16670 | PLAIN WASHER 12X4.5X1 | 2 | |
| 2 | 568692 | PAN SELF TAP SCREW 6SG X 16AB | 2 | |
| 3 | 18630 | PAN SELF TAP SCREW 6SG X 25AB | 2 | |
| 4 | 109012 | WIND SHIELD PACKING | 1 | |
| 5 | 587963 | LAMINATED WINSHIELD GLASS | 1 | E - Marked (Export) |
| 6 | B076098ED | WINDSCREEN FRAME ASSLY - C/O 501 BSIV DSL | 1 | |
| 7 | B001386 | HEX HEAD SCREW M5X20 | 9 | |
| 8 | 16405 | SPRING WASHER M5 | 16 | |
| 9 | 20105 | PLAIN NUT M5 | 20 | |
| 10 | 30242 | SLOT CH. HD. SCREW | 8 | |
| 11 | 808000826 | PLAIN WASHER M8 | 2 | |
| 12 | 016408 | SPRING WASHER | 2 | |
| 13 | 568713 | DOME NUT | 8 | |
| 14 | 3055 | PLAIN WASHER M5 | 8 | |
| 15 | 20104 | HEX NUT M4 | 8 | |

48

Print Date: 07-Apr-2022

**PLATE-21**

**Chassis Frame & Seat**

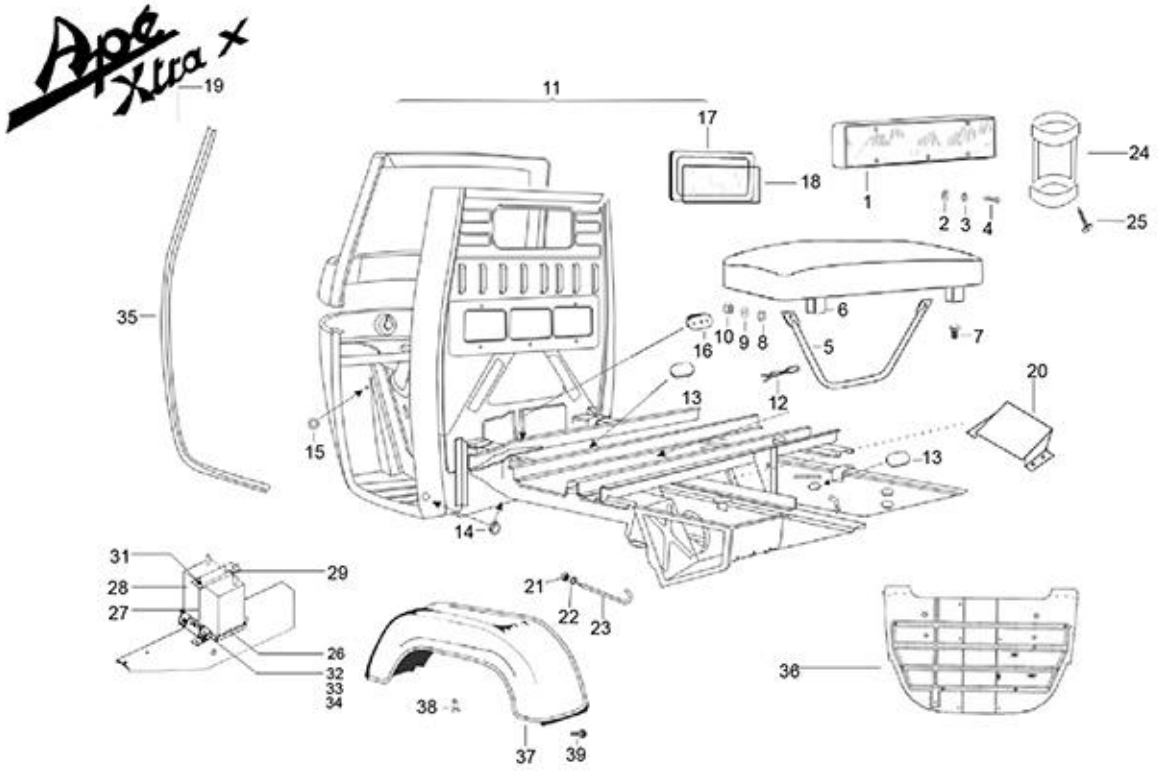
Ape Xtra X
19
11
17
18
1
2 3 4
24
25
35
6
10 9 8
16
5
7
20
13
12
15
13
14
31
29
28
27
21
22
23
26
32
33
34
36
38
37
39

49

Print Date: 07-Apr-2022

**PLATE-21**

**Chassis Frame & Seat**

| Fig. No. | Part No. | Description | Qty | Remarks |
|---|---|---|---|---|
| 1 | 644852 | DRIVER BACK REST ( CARGO) (VE) | 1 | |
| 2 | 16405 | SPRING WASHER M5 | 4 | |
| 3 | 16603 | PLAIN WASHER (METALLIC) | 4 | |
| 4 | 604606 | HEX HD. SCREW M5X20 CL8.8 | 4 | |
| 5 | 567562 | SEAT SUPPORT PIPE (COMM) | 1 | |
| 5a | B008638 | SEAT SUPPORT PIPE (COMM) | 4 | STEP-2 BS3 HS LAM PTL |
| 6 | B076226 | DRIVER SEAT ASSLY (CARGO) (VE) | 1 | |
| 6a | B008637 | DRIVER SEAT ASSLY | 1 | STEP-2 BS3 HS LAM PTL |
| 7 | 31119 | HEX HD SCREW M8 X 25 | 2 | |
| 8 | 3058 | PLAIN WASHER 15X8.4X1.5 | 2 | |
| 9 | 016408 | SPRING WASHER | 2 | |
| 10 | 20108 | HEX NUT M8 | 2 | |
| 11 | 6B000361EG | MAIN FRAME ASSLY APE CITY CARGO PETROL-EG | 1 | |
| 11 | 6B000361GY | MAIN FRAME ASSLY APE CITY CARGO PETROL-GY | 1 | |
| 11 | 6B000361CB | MAIN FRAME ASSLY APE CITY CARGO PETROL-CB | 1 | |
| 11 | 6B000361BW | MAIN FRAME ASSLY APE CITY CARGO PETROL-BW | 1 | |
| 11 | 6B000406EG | MAIN FRAME ASSLY APE CITY CARGO CNG BSIV-EG | 1 | |
| 11 | 6B000406ECO | MAIN FRAME ASSLY APE CITY CARGO CNG BSIV-CO | 1 | |
| 11 | 6B000406EGY | MAIN FRAME ASSLY APE CITY CARGO CNG BSIV-GY | 1 | |
| 11 | 6B000406CB | MAIN FRAME ASSLY APE CITY CARGO CNG BSIV-CB | 1 | |
| 11 | 6B000406BW | MAIN FRAME ASSLY APE CITY CARGO CNG BSIV-BW | 1 | |
| 11 | 6B000404EG | MAIN FRAME ASSLY APE CITY CARGO LPG BSIV-EG | 1 | |
| 11 | 6B000404CO | MAIN FRAME ASSLY APE CITY CARGO LPG BSIV-CO | 1 | |
| 11 | 6B000404GY | MAIN FRAME ASSLY APE CITY CARGO LPG BSIV-GY | 1 | |
| 11 | 6B000404CB | MAIN FRAME ASSLY APE CITY CARGO LPG BSIV-CB | 1 | |
| 11 | 6B000404BW | MAIN FRAME ASSLY APE CITY CARGO LPG BSIV-BW | 1 | |
| 12 | 568682 | FASTENER | 2 | |
| 13 | 109227 | PROTECTION GROMMET | 5 | |
| 14 | B002539 | GROMMET FOR DIA 7 HOLE ON DOME | 4 | |
| 15 | 568131 | PLUG DOME DIA. 21 MM - CAB BEHIND HL | 5 | |
| 16 | 568288 | PLUG CAB ROOF | 2 | |
| 17 | 604761 | PACKING SLIDING GLASS WINDOW | 1 | |
| 18 | 604751 | CABIN REAR WINDOW | 1 | |
| 19 | 6B000377 | STICKER APE CITY XTRA ( FRONT PANEL) | 1 | |
| 19.1 | 6B000378 | STICKER CITY XTRA (SIDE PANEL) | 1 | |

| | | | | |
|---|---|---|---|---|
| | | | | |

**50**

Print Date: 07-Apr-2022

**PLATE-21**

**Chassis Frame & Seat**

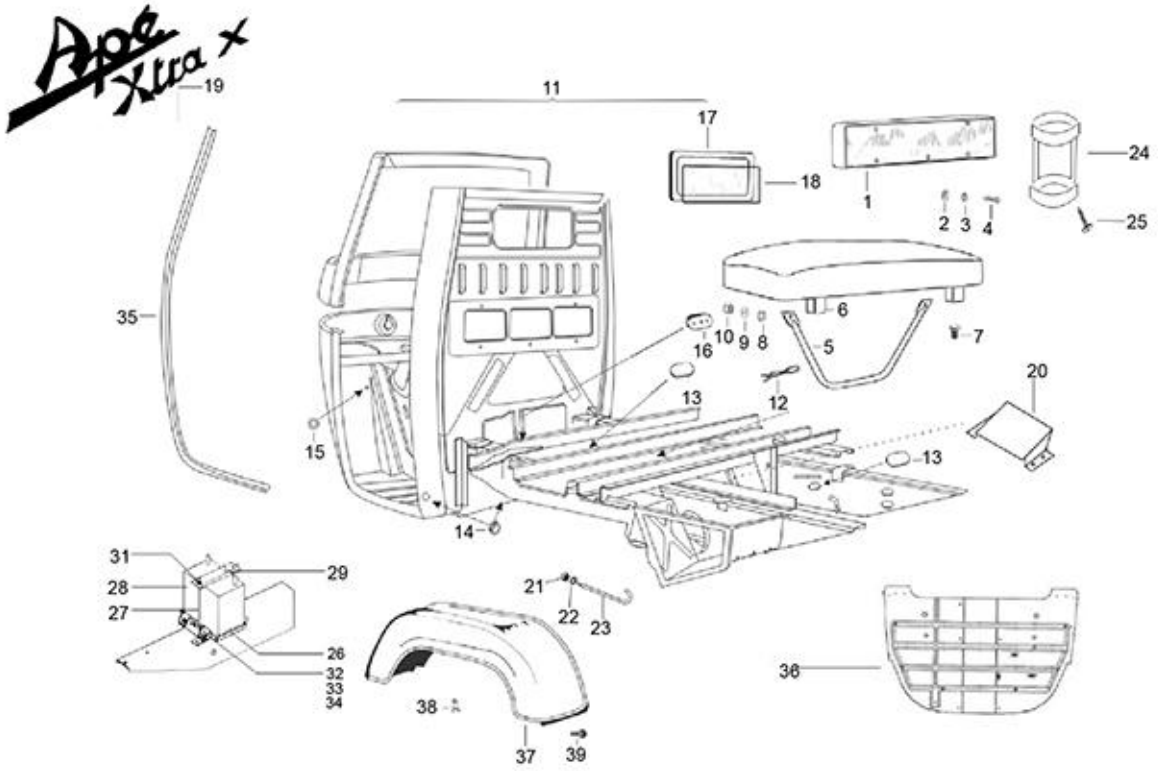
Ape Xtra X
19
11
17
18
1
2 3 4
24
25
35
6
10 9 8
16
5
7
20
13
12
15
13
14
31
29
28
27
21
22
23
26
32
33
34
38
37
39
36

51

Print Date: 07-Apr-2022

**PLATE-21**

**Chassis Frame & Seat**

| Fig. No. | Part No. | Description | Qty | Remarks |
|---|---|---|---|---|
| 20 | B042816 | AIR DEFLECTOR ASSLY. | 1 | |
| 21 | 20108 | HEX NUT M8 | 1 | |
| 22 | 3058 | PLAIN WASHER 15X8.4X1.5 | 1 | |
| 23 | 604954 | TENSION ROD | 1 | |
| 24 | 645141 | BOTTLE CARRIER STAND | 1 | |
| 25 | 660168 | PAN SELF TP. SCREW 10 SGX13AB | 2 | |
| 26 | 616649 | BATTERY TRAY | 1 | |
| 27 | 632508 | TENSION ROD ASSY. (BATTERY MOUNTING.) | 1 | |
| 28 | 652253R | BATTERY 12V-35AH | 1 | |
| 28 | B006544 | BATTERY 12V-35AH | 1 | P&C |
| 29 | B003978 | BATTERY HOLDING PLATE | 1 | |
| 30 | 20108 | HEX NUT M8 | 1 | |
| 31 | 3058 | PLAIN WASHER 15X8.4X1.5 | 1 | |
| 32 | 016408 | SPRING WASHER | 1 | |
| 33 | 13861 | PLAIN WASHER 20X8.2X2.5 | 4 | |
| 34 | 31118 | SCREW M8X20 | 4 | |
| 35 | 632604 | GASKET FRONT DOOR OPENING | 1 | |
| 36 | 587905PC | CABIN FLOOR SUB-ASSY. | 1 | |
| 37 | B042612 | REAR MUDGUARD RH/LH | 2 | |

52

Print Date: 07-Apr-2022

**PLATE-22**

**Doors & Drivers Seat**

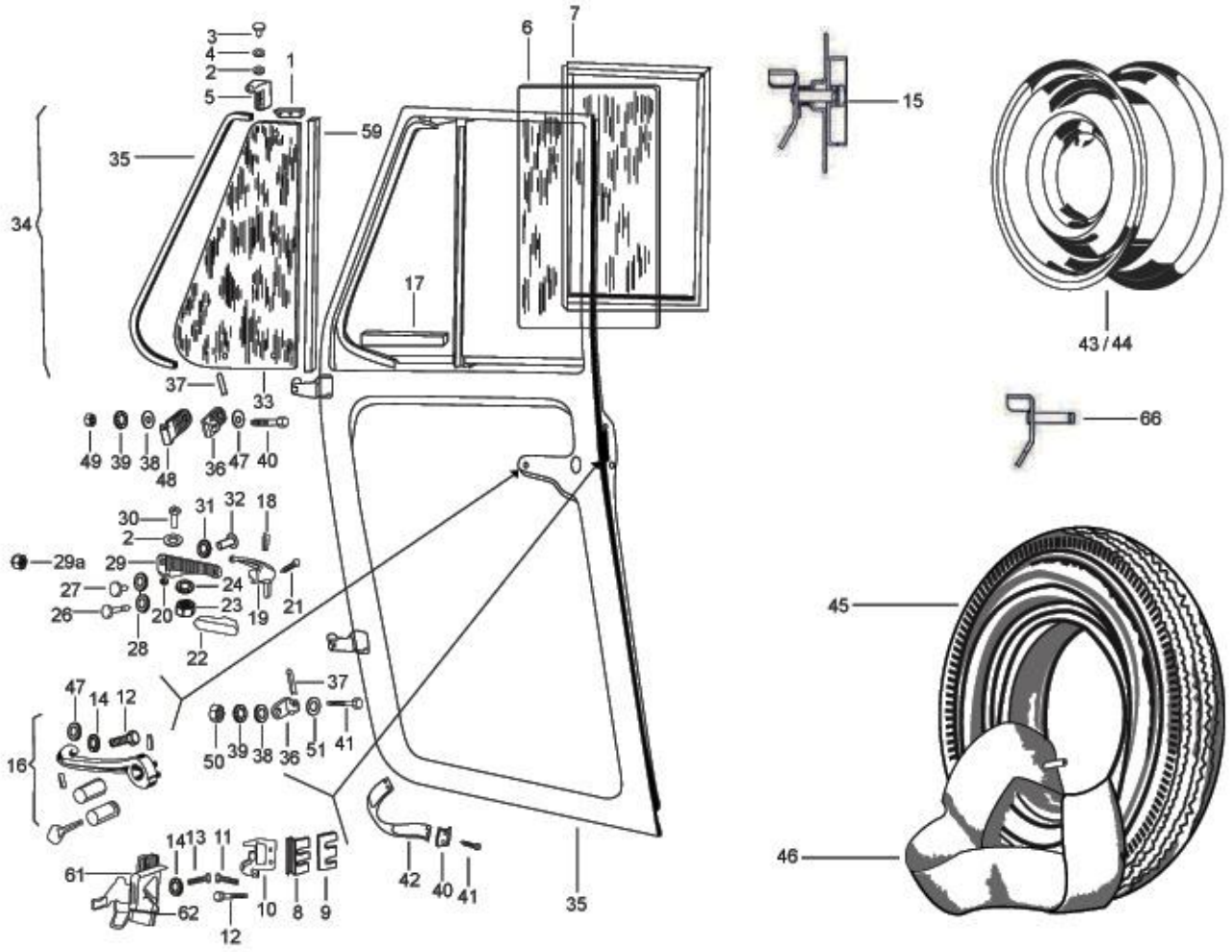
3
4
2
5
1
6
7
15
59
35
34
17
43/44
37
33
66
49
39
38
48
36
47
40
30
31
32
18
2
29a
29
27
24
26
20
23
19
21
28
22
45
47
14
12
37
16
50
39
38
36
51
41
14
13
11
61
62
10
8
9
42
40
41
35
46
12

53

Print Date: 07-Apr-2022

**PLATE-22**

**Doors & Drivers Seat**

| Fig. No. | Part No. | Description | Qty | Remarks |
|---|---|---|---|---|
| 1 | 163660 | DEFLECTOR PANE RABBET L.H. UPPER PACKING | 1 | |
| 2 | 97756 | METALLIC PLAIN WASHER | 4 | |
| 2 | 6965 | SPRING WASHER DIA 5 | 2 | |
| 3 | 5745 | RIVET DIA.7MM | 2 | |
| 4 | 6078 | PLAIN WASHER 12 X 5.2 X 1 | 2 | |
| 5 | 108800 | UPPER CLAMP OF RIGHT AIR DEFLECTOR | 1 | |
| 5 | 152025 | UPPER CLAMP OF L.H. AIR REFLECTOR | 1 | |
| 6 | 163661 | FIXED GLASS FOR THE WINDOW | 2 | E - Marked (Export) |
| 7 | 163663 | GASKET, WINDOW GLASS | 2 | |
| 8 | 140603 | SECURITY LOCK CYLINDER (SHIM PLATE)1.0TH | 2 | |
| 9 | 193724 | PLATE(OPTION SHIM PLATE) | 2 | |
| 10 | 182663 | BLOCK COMPLETE OF COLLISION DOOR LOCK LH | 1 | |
| 10 | 182662 | BLOCK COMPLETE OF COLLISION DOOR LOCK RH | 1 | |
| 11 | 569156 | CSK SCREW (BLOCK CLOSING DOOR) | 2 | |
| 12 | 569157 | CSK SCREW (BLOCK CLOSING DOOR) | 2 | |
| 13 | 30242 | SLOT CH. HD. SCREW | 3 | |
| 14 | 12546 | PLAIN WASHER / MULTI TOOTH LOCK WASHER M5 | 8 | |
| 15 | 182660R | COMPLETE LOCK OF RH DOOR | 1 | |
| 15 | 182661R | COMPLETE LOCK OF LH DOOR | 1 | |
| 16 | B024733 | HANDLE WITH PUSH BUTTON LH WITH KEY | 1 | |
| 16 | B024734 | HANDLE WITH PUSH BUTTON RH WITH KEY | 1 | |
| 17 | 163659 | DEFLECTOR PANE RABBET LOWER GASKET | 2 | |
| 18 | 8808 | SPRING PIN 2.5 X 14 | 2 | |
| 19 | B003864 | DEFL CLOSING LEVER RH -(PLASTIC) | 1 | |
| 19 | B003865 | DEFL CLOSING LEVER LH (PLASTIC) | 1 | |
| 20 | 116971 | RUBBER GROMMET | 2 | |
| 21 | 15727 | PAN SELF TAPPING SCREW | 2 | |
| 22 | B042814 | COLLISION FOR LEVER | 2 | |
| 23 | 97756 | METALLIC PLAIN WASHER | 2 | |
| 24 | 20108 | HEX NUT M8 | 2 | |
| 25 | 64263 | WINDOW FRICTION WASHER | 2 | |
| 26 | 604558 | PIVOT FOR LEVER FOR CLOSING DOORS | 2 | |
| 27 | 108804 | SCREW WITH WIDE HEAD (MALE) | 4 | |
| 28 | 13935 | WASHER | 2 | |
| 29 | 108801 | LOWER BKT.FOR CONNECTING R.H.DEFLECTOR | 1 | |

54

Print Date: 07-Apr-2022

**PLATE-22**

**Doors & Drivers Seat**

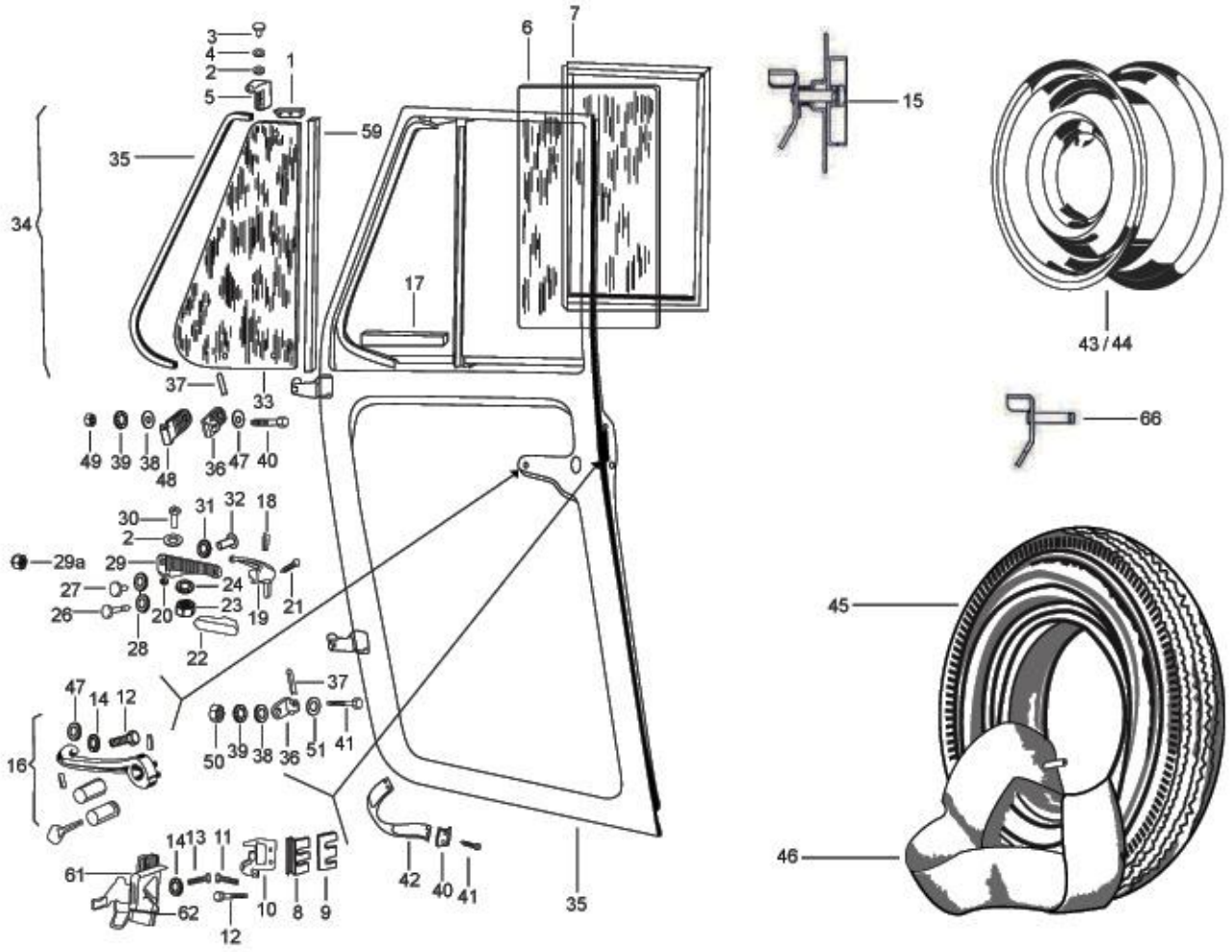
3
4
2
5
1
6
7
15
59
35
34
17
43/44
37
33
66
49
39
38
48
36
47
40
30
31
32
18
2
29a
29
27
24
26
20
23
19
21
28
22
45
47
14
12
37
16
50
39
38
36
51
41
14
13
11
61
62
10
8
9
42
40
41
35
46
12

55

Print Date: 07-Apr-2022

**PLATE-22**

**Doors & Drivers Seat**

| Fig. No. | Part No. | Description | Qty | Remarks |
|---|---|---|---|---|
| 30 | 109263 | LOWER BKT.FOR CONNECTION L.H. DEFLECTOR | 1 | |
| 31 | 12136 | NUT / NYLOCK NUT M5 | 2 | |
| 32 | 31058 | HEX HEAD SCREW M5 X 16 CC8.8 | 2 | |
| 33 | 163665 | GLASS, VENT | 2 | |
| 34 | 163666SP | RH; VENT WINDOW ASSY. | 1 | E - Marked (Export) |
| 34 | 163667SP | LH; VENT WINDOW ASSY. | 1 | E - Marked (Export) |
| 35 | B002847 | RH DOOR SUB ASSLY (CED) | 1 | |
| 35 | B002848 | LH DOOR SUB ASSLY (CED) | 1 | |
| 36 | 632238 | DOOR HINGE ASSLY UPPER | 4 | |
| 37 | 8847 | SPRING PIN 6X64 | 4 | |
| 38 | 13812 | METALLIC PLAIN WASHER | 2 | |
| 39 | 13861 | PLAIN WASHER 20X8.2X2.5 | 2 | |
| 41 | 12540 | SPRING WASHER M8 | 4 | |
| 40 | 8451 | PAN SELF TP SCREW 6 SGX13 AB | 8 | |
| 42 | B074173 | STOP BELT FOR DOOR | 1 | |
| 43 | B074588R | WHEEL RIM ASSLY INNER - PAINTED | 1 | |
| 44 | B074590R | WHEEL RIM OUTTER - PAINTED | 1 | |
| 45 | B001315 | TYRE (4.0 X 8,4 PR) | 1 | |
| 45A | B042878 | TRIPLE PLUS TYRE- 4X8 4PR (E-MARK) | 1 | STEP-2 BS3 HS LAM PTL |
| 46 | B001316 | INNER TUBE FOR TYRE 4.0 X 8 INCH | 4 | |
| 47 | 6018 | PL. WASHER | 2 | |
| 48 | 605389 | HINGE | 1 | |
| 49 | 20108 | HEX NUT M8 | 2 | |

**56**

Print Date: 07-Apr-2022

**PLATE-23**

**Inner Parts Of Cabin**

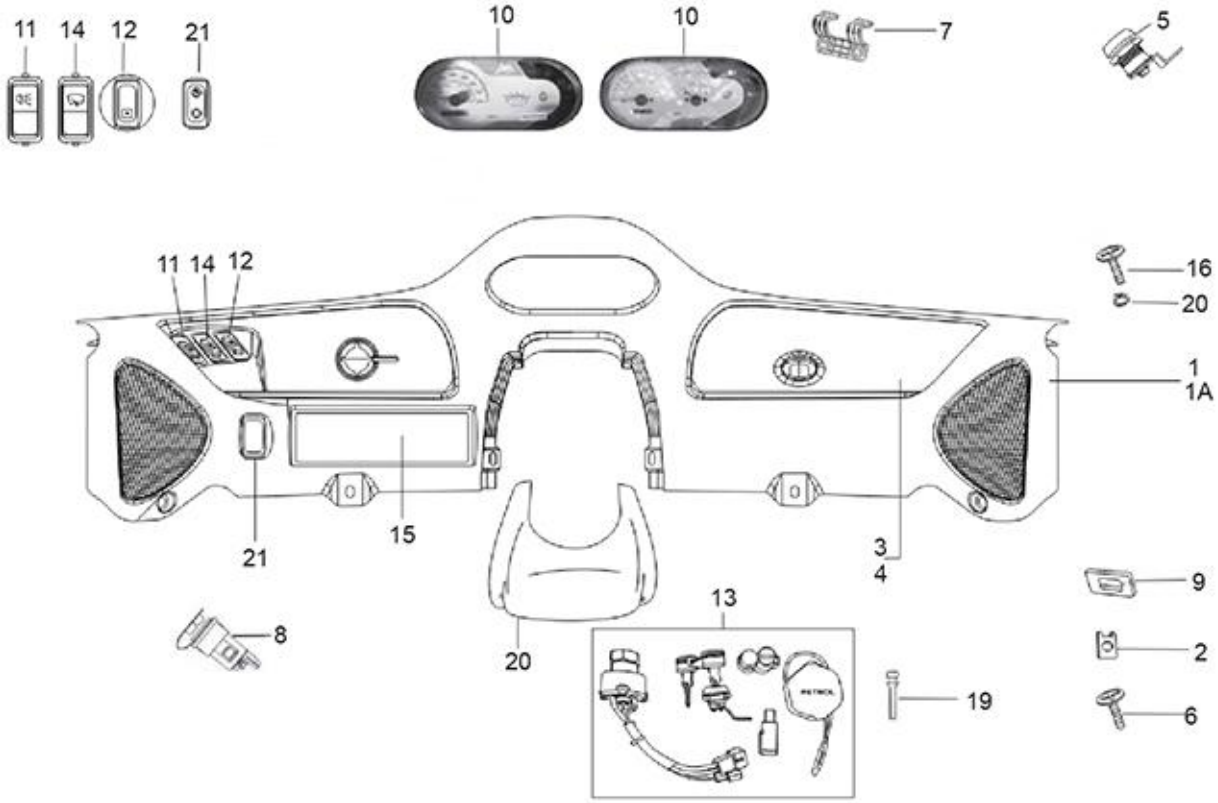
11
14
12
21
10
10
7
5
11
14
12
16
20
1
1A
21
15
3
4
9
13
8
20
2
19
6

57

Print Date: 07-Apr-2022

**PLATE-23**

**Inner Parts Of Cabin**

| Fig. No. | Part No. | Description | Qty | Remarks |
|---|---|---|---|---|
| 1 | B077469 | DASHBOARD ASSLY COMPLETE(PET) | 1 | |
| 1 | B077470 | DASH BOARD ASSY. (LPG / CNG) | 1 | |
| 1A | B076164 | DASHBOARD WITH GLOVE BOX COVER SUB ASSLY | 1 | Under Development |
| 2 | 8080 | SPRING PLATE | 4 | |
| 3 | B073810 | GLOVE BOX COVER | 1 | |
| 4 | 568671 | GASKET - GLOW BOX COVER (N.I.) | 4 | |
| 5 | B024169 | GLOVE BOX LOCK WITH KEY | 1 | |
| 6 | 660168 | PAN SELF TP. SCREW 10 SGX13AB | 4 | |
| 7 | B073814 | HINGE | 1 | |
| 8 | B074905 | MOBILE CHARGER | 1 | |
| 9 | 643691 | BOLT LOCK PLATE | 1 | |
| 10 | B074216 | INSTR. CLUSTER (PETROL) | 1 | |
| 10 | B075703 | INSTR. CLUSTER (CNG/LPG) | 1 | |
| 11 | B073478R | SWITCH 3 POSITION | 1 | |
| 12 | B073481R | HAZARD WARNING SWITCH WITH CROWN CAP (12V)(VE) | 1 | |
| 13 | B075255 | LOCK SET | 1 | |
| 14 | B073479R | WIPER MOTOR SWITCH/ SWITCH WIPER MOTOR | 1 | |
| 15 | B073812 | UTILITY BOX | 1 | |
| 16 | B023976 | CSK PHILIPS HEAD SCREW M5X15 | 8 | |
| 17 | B074262 | PIN | 2 | |
| 18 | 6078 | PLAIN WASHER 12 X 5.2 X 1 | 8 | |
| 19 | B074275 | RUBBER DAMPER | 2 | |
| 20 | B073811 | STEERING COLUMN COVER | 1 | |
| 21 | B075732 | FUEL CHANGE OVER SWITCH | 1 | |

58

Print Date: 07-Apr-2022

**PLATE-24**

**Rear Suspention**

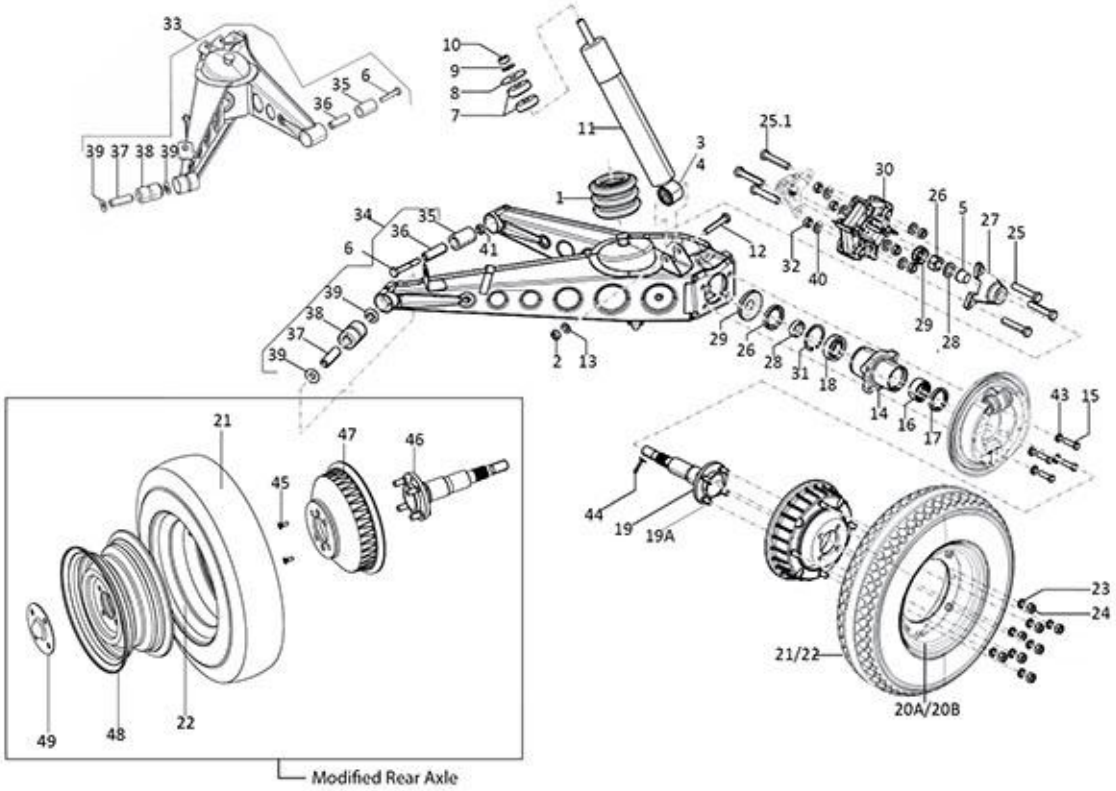
33
10
9
8
7
35
6
36
39 37 38 39
11
3
4
25.1
30
26
5
27
25
1
34
35
36
6
41
12
32
40
39
38
37
39
29
28
2
13
29
26
28
31
18
14
16
17
43
15
21
47
46
45
44
19
19A
23
24
21/22
20A/20B
49
48
22
Modified Rear Axle

59

Print Date: 07-Apr-2022

**PLATE-24**

**Rear Suspention**

| Fig. No. | Part No. | Description | Qty | Remarks |
|---|---|---|---|---|
| 1 | B076290 | RUBBER BUMPER | 2 | |
| 2 | 231370 | SELF BREAKING NUT M10 | 2 | |
| 3 | 157103 | BUSH - SHOCK ABSORBER | 2 | |
| 4 | 107827 | SPACER | 1 | |
| 5 | 128633 | CONE | 1 | |
| 6 | 643741 | HEX HDD BOLT M10 X 80 CL 12.9 | 4 | |
| 7 | 157103 | BUSH - SHOCK ABSORBER | 4 | |
| 8 | 6066 | PL WASHER 10.5X38X9 | 2 | |
| 9 | 16410 | SPRING WASHER | 2 | |
| 10 | 20110 | HEX NUT M10 | 2 | |
| 11 | 136451R | SHOCK ABSORBER REAR | 2 | |
| 12 | 267068 | HEX HEAD BOLT M10 X 60 CC 10.9 | 2 | |
| 13 | 286328 | PLAIN WASHER 20X10.2X2 | 2 | |
| 14 | 6C000530 | REAR WHEEL HUB | 2 | |
| 15 | B002486 | BOLT M8 X 35 6G CL 12.9 | 8 | |
| 16 | 661282 | NEEDLE ROLLER BEARING | 2 | |
| 17 | 20359 | SEAL RING | 2 | |
| 18 | 243303R | DEEP GROVE BALL BRG-RR WH AXLE | 2 | |
| 19 | B024374 | REAR AXLE COMPLETE (APE CITY) | 2 | |
| 19A | B001319 | BOLT FOR AXLE | 4 | |
| 19B | B077458 | REAR AXLE COMPLETE | 2 | STEP-2 BS3 HS LAM PTL |
| 20A | B074588R | WHEEL RIM ASSLY INNER - PAINTED | 1 | |
| 20B | B074590R | WHEEL RIM OUTTER - PAINTED | 1 | |
| 21 | B001317 | TYRE & TUBE ASSEMBLY | 4 | |
| 22 | B001316 | INNER TUBE FOR TYRE 4.0 X 8 INCH | 4 | |
| 23 | 16410 | SPRING WASHER | 12 | |
| 24 | 20110 | HEX NUT M10 | 12 | |
| 25 | 15594 | HEX HDD BOLT M10 X 35 | 6 | |
| 25.1 | B024373 | ALLEN BOLT M10X65 CL 10.9 | 6 | |
| 26 | 21118 | HEX NUT M18 X 1.5P | 2 | |
| 27 | 587617 | ELASTIC JOINT CONNECTION HUB (WHL - SIDE) | 2 | |
| 28 | 661267 | RING | 2 | |
| 29 | 109892 | PROTECTION CUP RR HUB | 2 | |
| 30 | 604535 | FLEXIBLE COUPLING | 2 | |
| 31 | 6650 | CIRCLIP DIA 50 (INT) | 2 | |

**60**

Print Date: 07-Apr-2022

**PLATE-24**

**Rear Suspention**

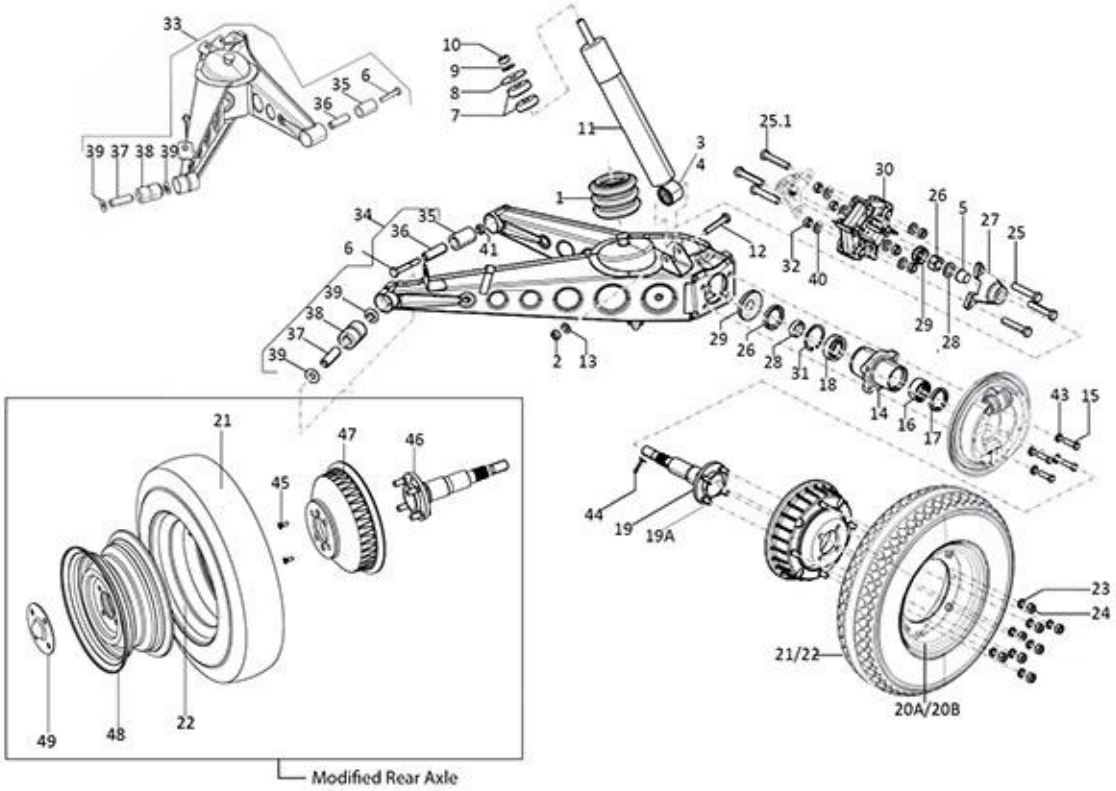
33
10
9
8
7
35
6
36
39 37 38 39
11
3
4
25.1
30
26
5
27
25
1
34
35
36
6
41
12
32
40
39
38
37
39
29
28
2
13
29
26
28
31
18
14
16
17
43
15
21
47
46
45
44
19
19A
23
24
21/22
20A/20B
49
48
22
Modified Rear Axle

61

Print Date: 07-Apr-2022

**PLATE-24**

**Rear Suspention**

| Fig. No. | Part No. | Description | Qty | Remarks |
|---|---|---|---|---|
| 32 | 231370 | SELF BREAKING NUT M10 | 12 | |
| 33 | B075807 | ARM SUB ASSY. LH - REAR SUSPENSION | 1 | |
| 34 | B075808 | ARM SUB ASSY. RH - REAR SUSPENSION | 1 | |
| 35 | 226662 | RING FOR ELASTIC SUPPORT | 2 | |
| 36 | 226661 | INTERNAL BUSH | 2 | |
| 37 | 267065 | SPACER FRONT | 2 | |
| 38 | 226596 | BUSH FRONT RING FOR ELASTIC SUPPORT | 2 | |
| 39 | 661266 | SHOULDER WASHER | 4 | |
| 40 | 237246 | SHIM WASHER 20X10.2X1 | 12 | |
| 41 | 231370 | SELF BREAKING NUT M10 | 4 | |
| 42 | 3068 | PLAIN WASHER | 1 | |
| 43 | 016408 | SPRING WASHER | 8 | |
| 44 | 12790 | SPLIT PIN | 2 | |
| 45 | 812061656 | CSK PHILIPS HEAD SCREW M6 X 16 | 4 | Modified |
| 46 | B077458 | REAR AXLE COMPLETE | 2 | Modified |
| 47 | B077245 | BRAKE DRUM (CAST IRON) | 2 | Modified |
| 48 | 6C000430 | WHEEL RIM ASSY | 2 | Modified |
| 49 | B077481 | WHEEL CAP | 2 | Modified |

62

Print Date: 07-Apr-2022

**PLATE-25**

**Steering Column And Front Suspension**

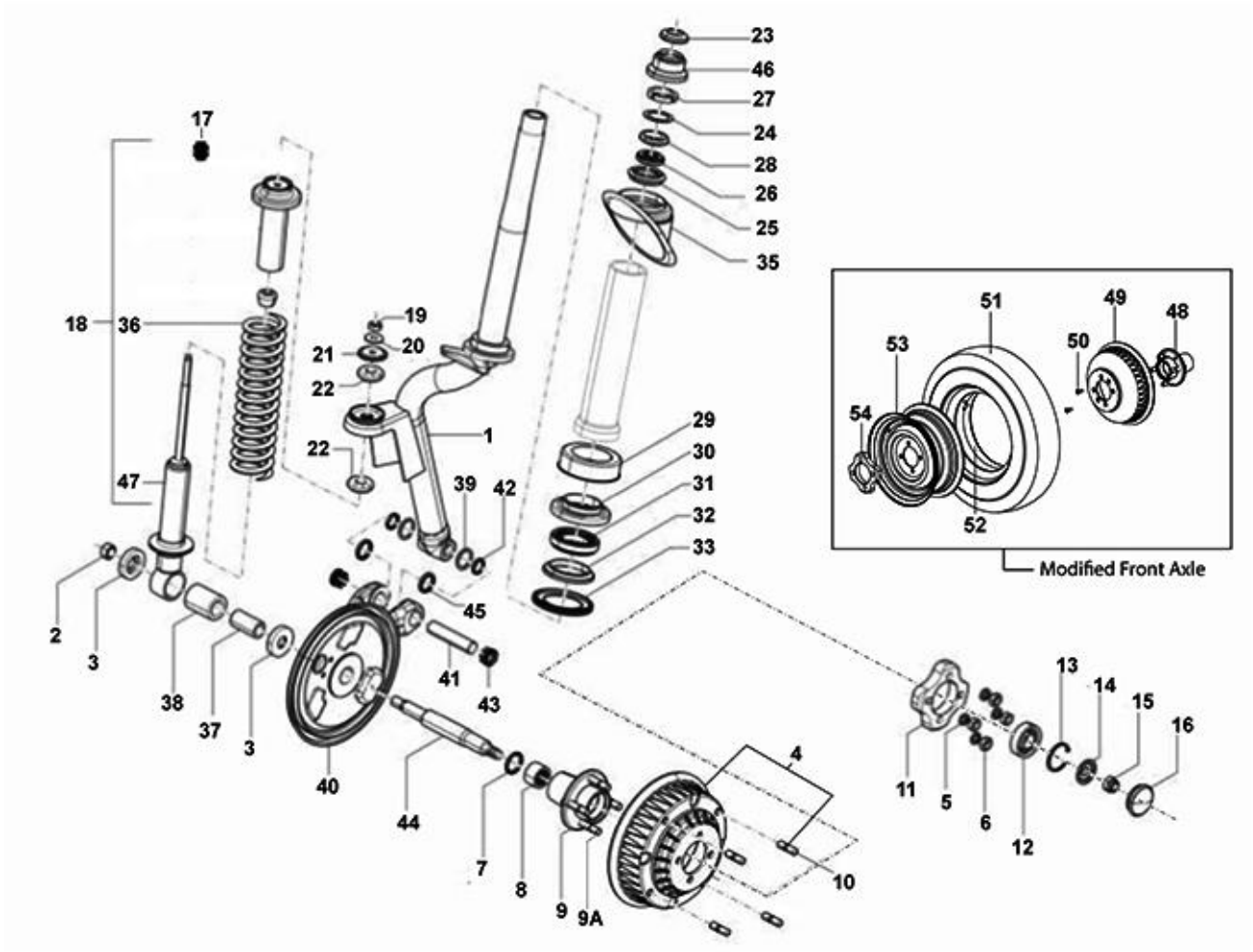
23
46
27
24
28
26
25
35
17
18
36
19
20
21
22
22
1
29
30
31
32
33
47
39
42
45
2
3
38
37
3
41
43
40
44
7
8
9
9A
4
10
11
5
6
12
13
14
15
16
51
49
48
53
50
54
52
Modified Front Axle

63

Print Date: 07-Apr-2022

**PLATE-25**

**Steering Column And Front Suspension**

| Fig. No. | Part No. | Description | Qty | Remarks |
|---|---|---|---|---|
| 1 | B073667SP | STEERING COLUMN ASSLY (NRB)-PAX UPGR SPD | 1 | |
| 1 | B075694 | STEERING COLUMN WITH IP | 1 | |
| 2 | 568095 | NYLOCK NUT | 1 | |
| 3 | 87067 | PLAIN WASHER 30.5X14.3X2 | 1 | |
| 4 | B042438 | BRAKE DRUM ASSY. COMPLETE | 1 | |
| 5 | 16410 | SPRING WASHER | 4 | |
| 6 | 20110 | HEX NUT M10 | 4 | |
| 7 | 136434 | OIL SEAL | 1 | |
| 8 | 125289 | NEEDLE BEARING, CRANKASE, FRONT WHEEL | 1 | |
| 9 | B001302 | FRONT HUB ASSLY. | 1 | |
| 9A | B001301 | BOLT FRONT HUB. | 4 | |
| 10 | B001323 | STUD M10 - BRAKE DRUM | 4 | |
| 11 | B041181 | SPACER DISC FRONT WHEEL MTG (ALUMIN) | 1 | |
| 12 | 30209R | BALL BEARING FRONT WHEEL HUB | 1 | |
| 13 | 567473 | CIRCLIP DIA. 42 INT. (841004203) | 1 | |
| 14 | 180431 | COIN WASHER | 1 | |
| 15 | 74521 | NUT M14 X 1.5 | 1 | |
| 16 | 107871 | CAP | 1 | |
| 17 | 75708 | SILENT BLOCK | 1 | |
| 18 | B073690 | FRONT SHOCK ABSORBER | 1 | |
| 19 | 20110 | HEX NUT M10 | 1 | |
| 20 | 16410 | SPRING WASHER | 10 | |
| 21 | 6066 | PL WASHER 10.5X38X9 | 1 | |
| 22 | 107826 | RUBBER BUSH/BUFFER FOR COUPLING SHOCK ABSORBE | 2 | NS |
| 23 | 604758 | PROTECTION | 1 | |
| 24 | 108873 | STOP WASHER FOR HOLDING | 1 | |
| 25 | 567990 | BEARING RACE UPPER BOTTOM | 1 | |
| 26 | 567991 | BEARING RACE UPPER TOP | 1 | |
| 27 | 108874 | SECURING RING NUT | 1 | |
| 28 | 6C000190 | UPPER BALL CAGE (VE) | 1 | |
| 29 | 109064 | DUST COVER | 1 | |
| 30 | 567992 | BEARING RACE LOWER TOP | 1 | |
| 31 | 6C000191 | LOWER BALL CAGE (VE) | 1 | |
| 32 | 567993 | BEARING RACE LOWER BOTTOM | 1 | |
| 33 | 109066 | WASHER WITH PROTECTION FOR BEARING | 1 | |

64

Print Date: 07-Apr-2022

**PLATE-25**

**Steering Column And Front Suspension**

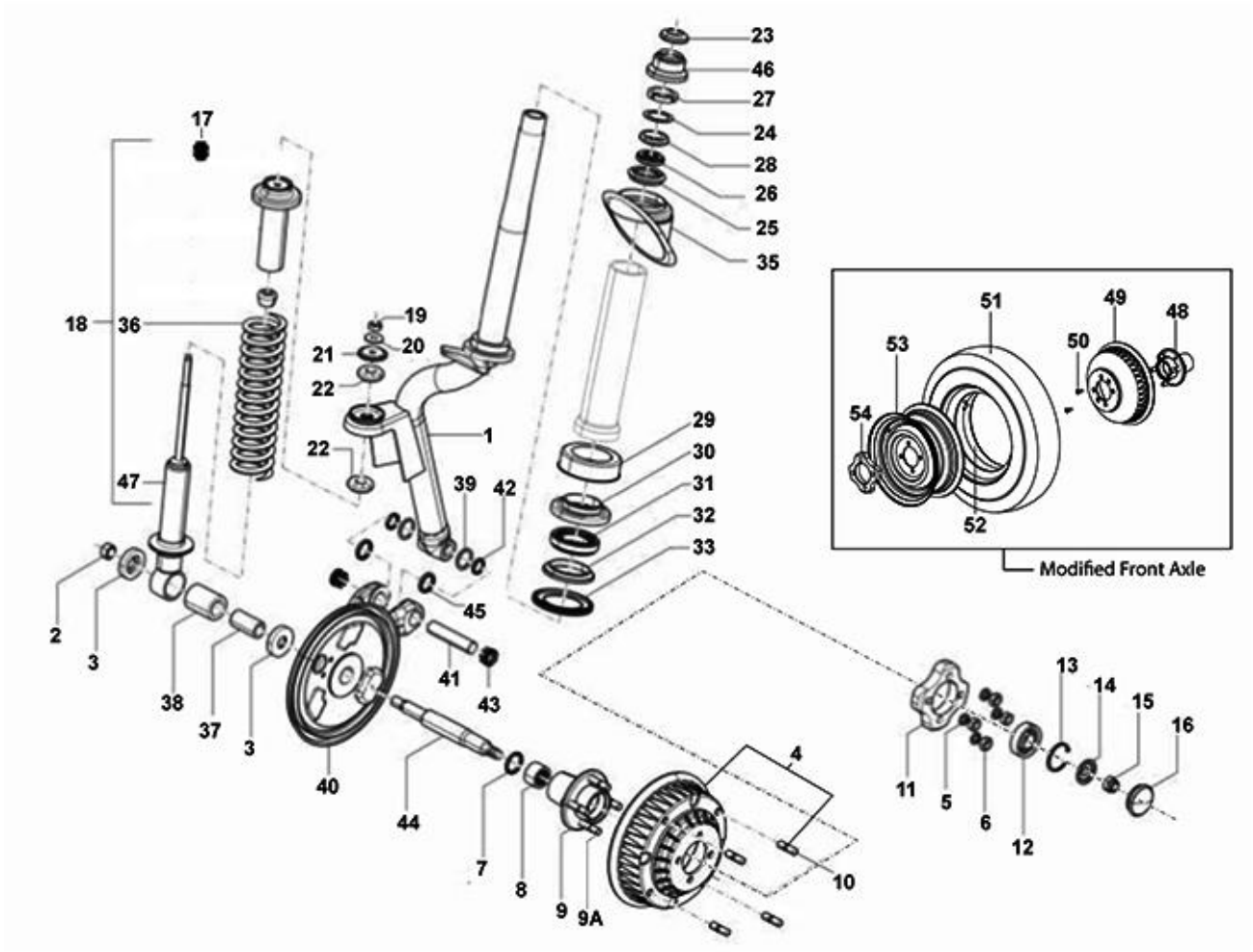
23
46
27
24
28
26
25
35
17
18
36
19
20
21
22
22
1
29
30
31
32
33
47
39
42
45
2
3
38
37
3
41
43
40
44
7
8
9
9A
4
10
11
5
6
12
13
14
15
16
51
49
48
53
50
54
52
Modified Front Axle

65

Print Date: 07-Apr-2022

**PLATE-25**

**Steering Column And Front Suspension**

| Fig. No. | Part No. | Description | Qty | Remarks |
|---|---|---|---|---|
| 34 | 604759 | RUBBER CAP STEERING COLUMN (N.I.) | 4 | |
| 35 | 109265 | SPLASH GUARD DUST COVER | 1 | |
| 36 | 940066 | SPRING SHOCK ABSORBER-UG / RING | 1 | |
| 37 | 109117 | RUBBER BUSH (FRT SHOCK ABSORBER) / RING | 1 | |
| 38 | 566545 | RUBBER BUSH (FRT SHOCK ABSORBER) - MODIFIED | 1 | |
| 39 | 6733 | O RING | 2 | |
| 40 | B024113 | FRONT BRAKE ASSY. | 1 | |
| 41 | 137235 | STEERING PIN | 1 | |
| 42 | 8771 | OIL SEAL (18-24-4) | 2 | |
| 43 | 107718 | ROLLER BUSH | 2 | |
| 44 | 643772R | FRONT WHEEL AXLE | 1 | |
| 45 | 150579 | RING FOR HOLDING TYPE J F101 17A | 2 | |
| 46 | 604758 | PROTECTION | 1 | |
| 47 | 940065 | SHOCK ABSORBER W/O SPRING | 1 | |
| 48 | B077465 | FRONT HUB S/A | 1 | Modified |
| 49 | B077245 | BRAKE DRUM (CAST IRON) | 1 | Modified |
| 50 | 812061656 | CSK PHILIPS HEAD SCREW M6 X 16 | 2 | Modified |
| 51 | B001315 | TYRE (4.0 X 8,4 PR) | 1 | Modified |
| 52 | B001316 | INNER TUBE FOR TYRE 4.0 X 8 INCH | 1 | Modified |
| 53 | 6C000430 | WHEEL RIM ASSY | 1 | Modified |
| 54 | B077461 | SPACER DISC FRONT WHEEL MTG (ALUMIN.) | 1 | Modified |

66

Print Date: 07-Apr-2022

**PLATE-26**

**Handle Bar And Control**

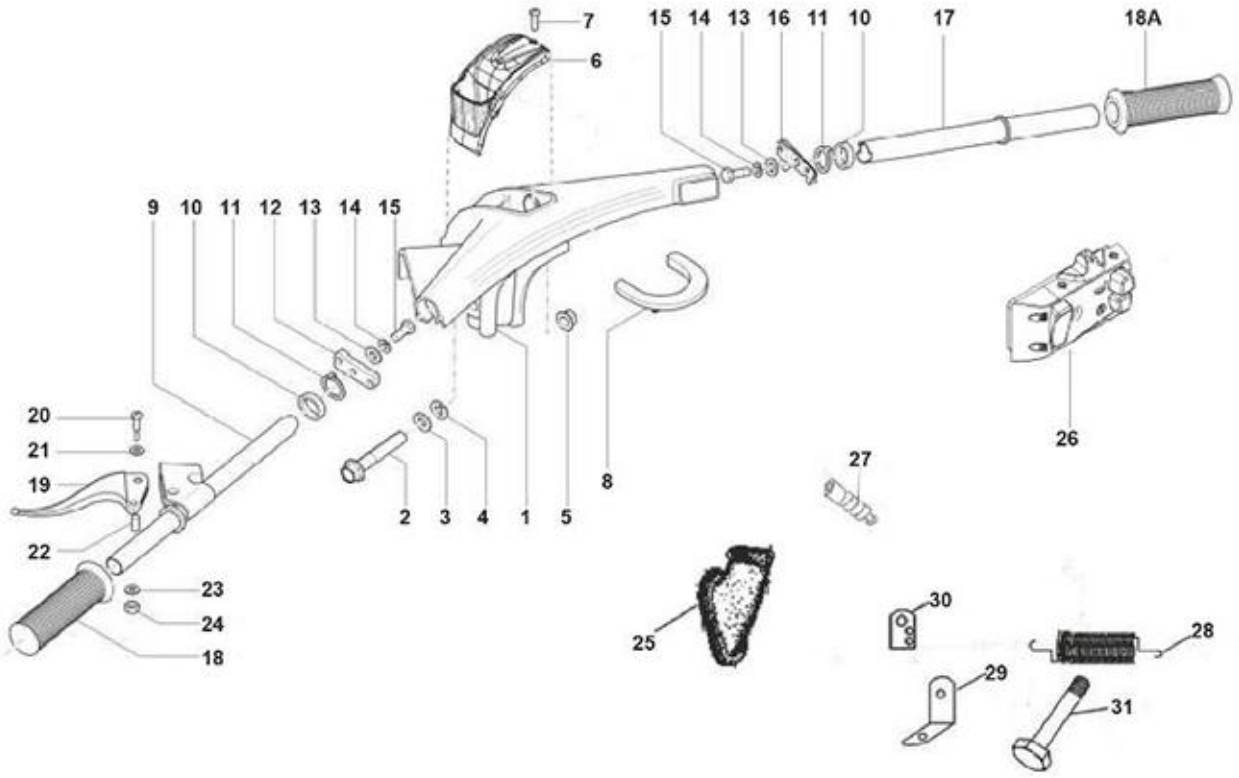
7
6
15
14
13
16
11
10
17
18A
9
10
11
12
13
14
15
20
21
19
22
23
24
18
2
3
4
1
5
8
27
26
25
30
28
29
31

67

Print Date: 07-Apr-2022

**PLATE-26**

**Handle Bar And Control**

| Fig. No. | Part No. | Description | Qty | Remarks |
|---|---|---|---|---|
| 1 | B075687ED | HANDLE BAR BODY-ED | 1 | |
| 2 | 30104 | MOUNTING BOLT M10 X 75 | 1 | |
| 3 | 16626 | PLAIN WASHER (18X10.5X2) | 2 | |
| 4 | 16410 | SPRING WASHER | 1 | |
| 5 | 20110 | HEX NUT M10 | 1 | |
| 6 | B041600 | HANDLE BAR COVER | 1 | |
| 7 | 632158 | CSK HEAD SCREW | 1 | |
| 8 | 126902 | PROTECTION COLLAR CABLE | 1 | |
| 9 | 127451 | TUBE WITH TERMINAL S/A | 1 | |
| 10 | 109404 | WASHER OF RABBET(41737) | 1 | |
| 11 | 60565 | SPRING WASHER | 1 | |
| 12 | 109775 | GEAR CONTROL LEVER S/A | 1 | |
| 13 | 3055 | PLAIN WASHER M5 | 2 | |
| 14 | 016406 | SPRING WASHER | 2 | |
| 15 | 31089 | HEX HEAD SCREW M6X18 CL 8.8 | 2 | |
| 16 | 109635 | THROTTLE CONTROL LEVER WITH IP | 1 | |
| 17 | 587902 | ACCELERATOR TUBE ASSY. | 1 | |
| 18 | 141925 | HANDLE | 2 | |
| 19 | 1E002770 | LEVER CLUTCH CONTROL | 1 | ECN: 500000253294 |
| 20 | B075313 | SCREW FOR CLUTCH LEVER (NEW) | 1 | |
| 21 | 16319 | BENT SPRING WASHER | 1 | |
| 22 | 125181 | SPACER | 1 | |
| 23 | 16620 | PLAIN WASHER | 1 | |
| 24 | 12138 | NYLOCK NUT M6 | 1 | |
| 25 | 109227 | PROTECTION GROMMET | 1 | |
| 26 | B073850R | HBS (ST. BUTTON) - CITY UPGRADE (NEW) _ALL NUOVO MODEL | 1 | |
| 27 | 109227 | PROTECTION GROMMET | 2 | |
| 28 | B006853 | SPRING HANDLE BAR | 1 | |
| 29 | B074498 | BRACKET | 1 | |
| 30 | B074040 | PLATE SPRING MTG. HANDLE BAR | 1 | |
| 31 | 30104 | MOUNTING BOLT M10 X 75 | 1 | |

68

Print Date: 07-Apr-2022

**PLATE-27**

**Brake -Tandem Master Cylinder ,Brake Pipe And Hand Brakes**

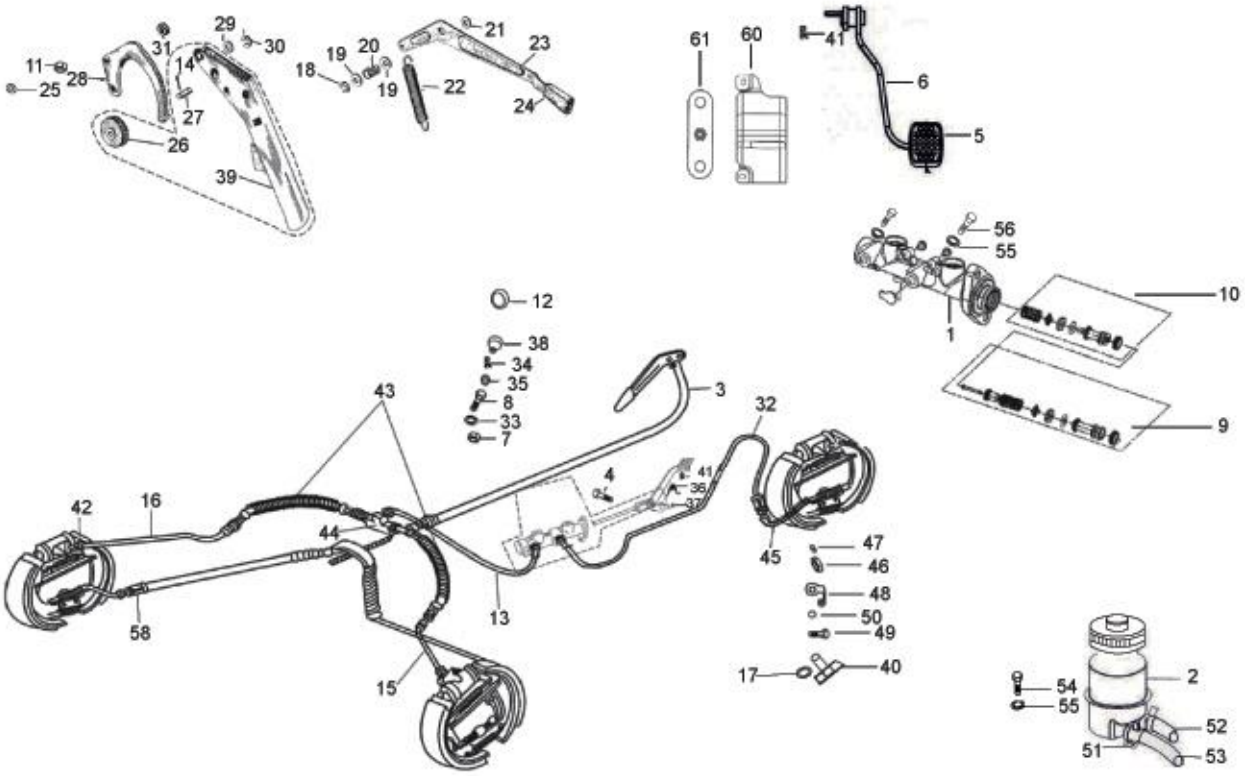
11
25
28
31
29
30
14
27
26
39
18
19
20
19
22
21
23
24
61
60
41
6
5
56
55
1
10
9
12
38
34
35
8
33
7
43
3
32
4
41
36
37
42
16
44
45
47
46
48
50
49
58
13
15
17
40
54
55
2
52
51
53

69

Print Date: 07-Apr-2022

**PLATE-27**

**Brake -Tandem Master Cylinder ,Brake Pipe And Hand Brakes**

| Fig. No. | Part No. | Description | Qty | Remarks |
|---|---|---|---|---|
| 1 | B042396 | TANDEM MASTER CYLINDER ASSLY WITH RESERVIOR | 1 | PETROL |
| 2 | 604877 | BRAKE OIL TANK | 1 | |
| 3 | B041774 | PARKING BRAKE CABLE ASSY | 1 | |
| 4 | 652001 | PIN | 1 | |
| 5 | 567461 | RUBBER PROTECTION FOR PEDAL | 1 | |
| 6 | B075492 | BRAKE PEDAL WITH FOOT REST ASSLY | 2 | |
| 6A | 604760 | BRAKE PEDAL WITH FOOT REST ASSLY | 2 | STEP-2 BS3 HS LAM PTL |
| 7 | 20108 | HEX NUT M8 | 2 | |
| 8 | 812061656 | CSK PHILIPS HEAD SCREW M6 X 16 | 2 | |
| 9 | B042976 | MAJOR KIT TMC (KBX 1008) | 1 | |
| 10 | B042977 | MINOR KIT TMC (KBX 1009) | 1 | |
| 11 | 20106 | HEX NUT M6 | 2 | |
| 12 | B042693 | CUP RETAINING SPRING (SPLIT TYPE) | 2 | |
| 13 | B042599 | BRAKE TUBE FOR REAR WHEEL | 1 | |
| 14 | 567920 | SPLIT PIN | 3 | |
| 15 | B041161 | BRAKE-PUMP TUBE OF LEFT REAR WHEEL | 1 | |
| 16 | B041160 | BRAKE-PUMP TUBE OF RIGHT REAR WHEEL | 1 | |
| 17 | 3055 | PLAIN WASHER M5 | 1 | |
| 18 | 5969 | CIRCLIP DIA 9 E TYPE | 1 | |
| 19 | 6173 | METALLIC PLAIN WASHER (808001026) | 2 | |
| 20 | 108785 | SPRING | 1 | |
| 21 | B042317 | SPACER-RC LEVER | 1 | |
| 22 | 567690 | REVERSE GEAR COUPLING SPRING | 1 | |
| 23 | 125411 | BACKING COMMAND LEVER | 1 | |
| 24 | 604717 | KNOB FOR R.C. | 1 | |
| 25 | 016406 | SPRING WASHER | 2 | |
| 26 | 567898 | PULLEY FOR HAND BRAKE | 1 | |
| 27 | 567899 | CLEVIS PIN | 1 | |
| 28 | B042794 | RATCHET , HAND BRAKE CONTROL | 1 | |
| 29 | 016408 | SPRING WASHER | 1 | |
| 30 | 6411 | EXT CIRCLIP DIA 11 | 1 | |
| 31 | 20108 | HEX NUT M8 | 1 | |
| 32 | 568161 | TUBE BETWEEN TMC & FRT WHEEL | 1 | |
| 33 | 016408 | SPRING WASHER | 2 | |
| 34 | 567920 | SPLIT PIN | 1 | |

**70**

Print Date: 07-Apr-2022

**PLATE-27**

**Brake -Tandem Master Cylinder ,Brake Pipe And Hand Brakes**

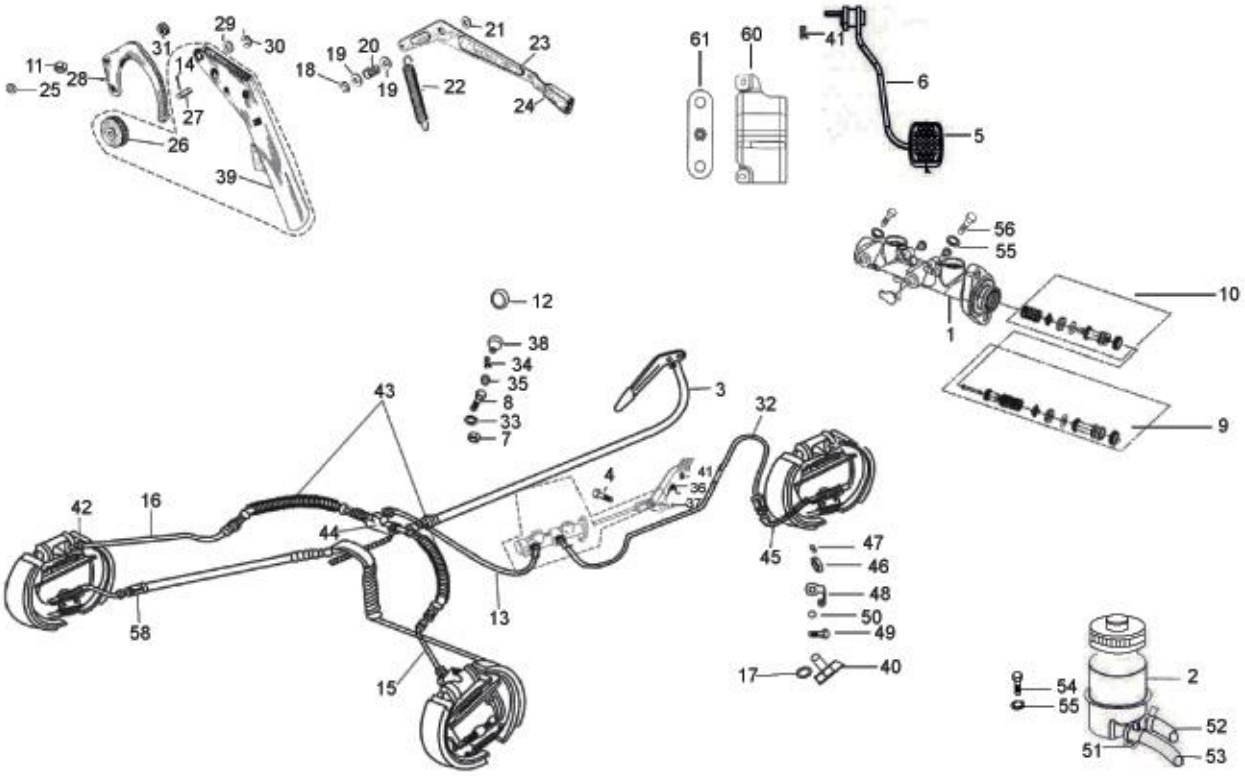
11
25
28
31
29
30
14
27
26
39
18
19
20
19
22
21
23
24
61
60
41
6
5
56
55
1
10
9
12
38
34
35
8
33
7
43
3
32
4
41
36
37
42
16
44
45
47
46
48
50
49
58
13
15
17
40
54
55
2
52
51
53

71

Print Date: 07-Apr-2022

**PLATE-27**

**Brake -Tandem Master Cylinder ,Brake Pipe And Hand Brakes**

| Fig. No. | Part No. | Description | Qty | Remarks |
|---|---|---|---|---|
| 35 | 3058 | PLAIN WASHER 15X8.4X1.5 | 1 | |
| 36 | 587928 | FOOT BRAKE PEDAL SPRING | 1 | |
| 37 | 229524 | WASHER 21X14.3X2 | 1 | |
| 38 | 138237 | CAP | 1 | |
| 39 | 567746G1 | HAND BRAKE LEVER (WITH POWDER COATING) | 1 | |
| 40 | 632056 | HEX NUT M6 | 1 | |
| 41 | 568737 | SPLIT PIN 4 X 25 (821 0425 2 2) | 2 | |
| 42 | 136916 | PLATE FOR RETAINING THE BRAKE FLEX. PIPE | 3 | |
| 43 | 644814R | FLEXIBLE BRAKE HOSE | 2 | |
| 43 | B023786R | FLEXIBLE PIPE FOR REAR WHEEL BRAKE | 2 | |
| 44 | 643692 | THREE WAY UNION | 1 | |
| 45 | 587624R | FLEXIBLE PIPING FOR FRONT WHEEL BRAKE R | 1 | |
| 46 | 21216 | HEX NUT M16 X 1.5 | 1 | |
| 47 | 48197 | PL WASHER 24X16X1.5 | 13 | |
| 48 | B003228 | LOCK PLATE FRONT BRAKE HOSE | 1 | |
| 49 | 587829 | BENJO BOLT | 1 | |
| 50 | 127927R | PACKING | 1 | |
| 51 | B075838 | CLAMP | 2 | |
| 52 | B075488 | TUBE NO-1-BRAKE OIL TANK TO TMC | 1 | |
| 53 | B075489 | TUBE NO-2 -BRAKE OIL TANK TO TMC | 1 | |
| 54 | B074999 | HEX BOLT | 2 | |
| 55 | 013880 | PLAIN WASHER | 4 | |

72

Print Date: 07-Apr-2022

**PLATE-28**
**Electrical Devices**

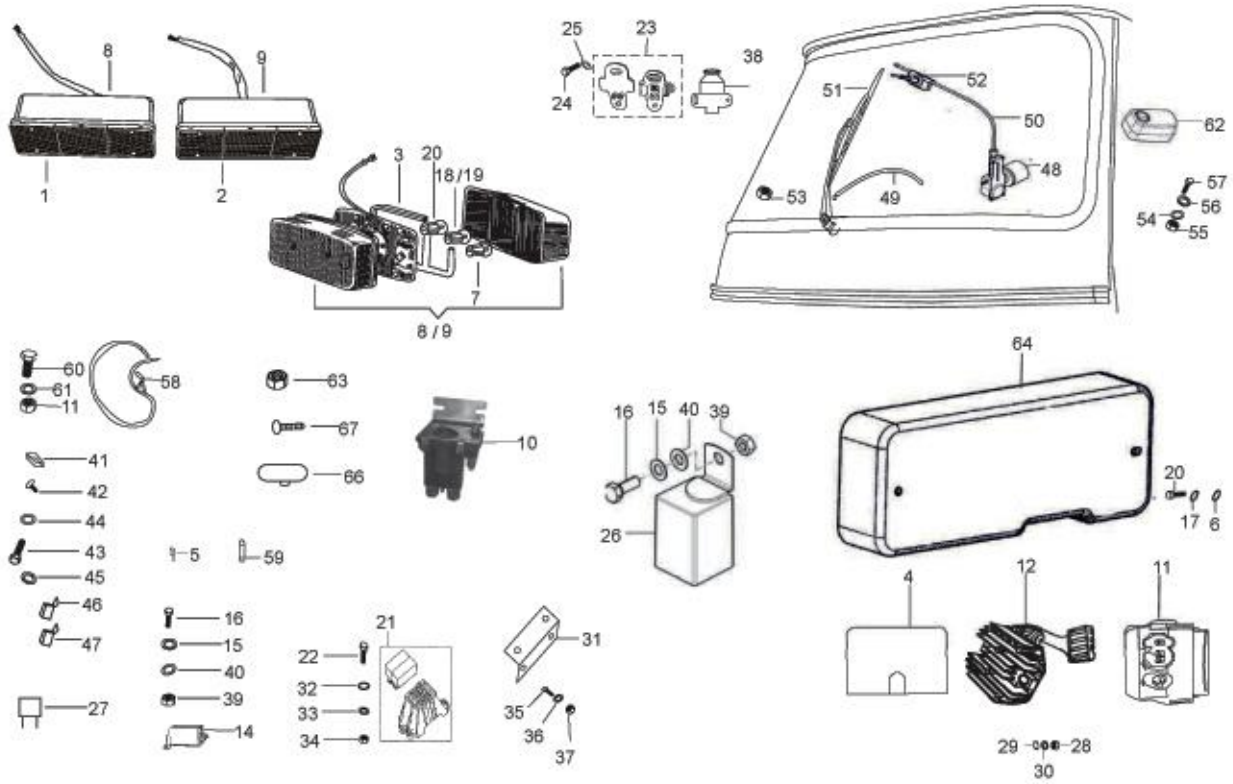
8
9
1
2
25
23
24
38
51
52
50
62
3
20
18/19
48
53
49
57
56
54
55
7
8 / 9
60
61
11
58
63
67
66
10
16
15
40
39
64
41
42
44
43
45
46
47
5
59
26
20
17
6
4
12
11
16
15
40
39
14
27
21
22
32
33
34
31
35
36
37
29
28
30

73

Print Date: 07-Apr-2022

**PLATE-28**

**Electrical Devices**

| Fig. No. | Part No. | Description | Qty | Remarks |
|---|---|---|---|---|
| 1 | 920083 | TAIL LAMP LENSE LH WITH HARDWARE & GASKET | 1 | |
| 2 | 920084 | TAIL LAMP LENSE RH WITH HARDWARE & GASKET | 1 | |
| 3 | 925603 | PACKING | 2 | |
| 4 | B024056 | COVER CDI | 1 | |
| 5 | 604557 | FUSE (10A) | 6 | |
| 6 | 3055 | PLAIN WASHER M5 | 1 | |
| 7 | 181747 | REVERSE LAMP BULB 12V 5W | 2 | |
| 8 | 643704R | TAIL LAMP ASSY. LH | 1 | E - Marked (Export) |
| 9 | 643705R | TAIL LAMP ASSY. RH | 1 | E - Marked (Export) |
| 10 | 587671R | 4 ST RELAY SOLENOID | 1 | |
| 11 | 1A009251 | CDI - PETROL | 1 | |
| 11 | 1A009352 | CDI - LPG | 1 | |
| 11 | 1A009353 | CDI - CNG | 1 | |
| 11A | 1D000510 | ELECTRONIC STARTER UNIT | 1 | STEP-2 BS3 HS LAM PTL |
| 12 | 1D000671R | VOLTAGE REGULATOR | 1 | |
| 13 | B024641 | REAR LAMPS SUPPORT PAX 200 (GREY) | 2 | |
| 14 | B023727R | CONTACTOR | 1 | |
| 15 | 12546 | PLAIN WASHER / MULTI TOOTH LOCK WASHER M5 | 1 | |
| 16 | 31057 | HEX HEAD SCREW M5 X 14 CL 8.8 | 1 | |
| 17 | 568721 | SPRING WASHER M4 | 2 | |
| 18 | 181746 | INDICATOR BULB 12V 10W | 1 | |
| 19 | 925581 | INDICATOR LIGHT BULB 12V 21W AMBER COLOUR | 1 | |
| 20 | 8451 | PAN SELF TP SCREW 6 SGX13 AB | 2 | |
| 21 | 567581 | FOUR POLE FUSE BOX | 1 | |
| 22 | 31058 | HEX HEAD SCREW M5 X 16 CC8.8 | 2 | |
| 23 | 567498R | BRAKE/REVERSE LIGHT SW (INTEGRAL CAP)-PAV | 2 | |
| 24 | 15996 | PHIL RD HD SCREW M4X12 | 2 | |
| 25 | 003054 | PLAIN WASHER | 2 | |
| 26 | B023727R | CONTACTOR | 1 | |
| 27 | 567706 | FUSE 30 A | 1 | |
| 28 | 12136 | NUT / NYLOCK NUT M5 | 2 | |
| 29 | 6078 | PLAIN WASHER 12 X 5.2 X 1 | 2 | |
| 30 | 16405 | SPRING WASHER M5 | 2 | |
| 31 | 660109 | FUSE BOX BKT | 1 | |
| 32 | 3055 | PLAIN WASHER M5 | 2 | |

**74**

Print Date: 07-Apr-2022

**PLATE-28**
**Electrical Devices**

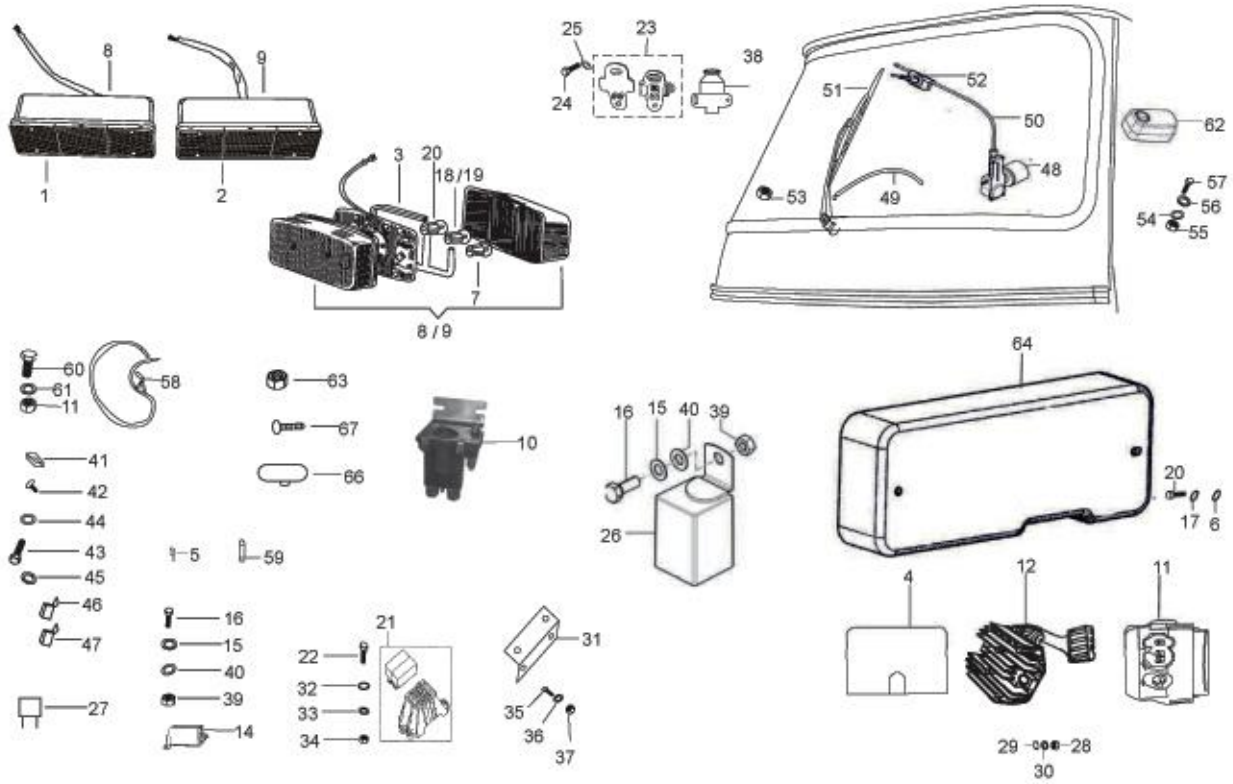
8
9
1
2
25
23
24
38
51
52
50
62
3
20
18/19
48
53
49
57
56
54
55
7
8 / 9
60
61
11
58
63
67
66
10
16
15
40
39
64
41
42
44
43
45
46
47
5
59
26
20
17
6
4
12
11
16
15
40
39
14
27
21
22
32
33
34
31
35
36
37
29
28
30

75

Print Date: 07-Apr-2022

**PLATE-28**

**Electrical Devices**

| Fig. No. | Part No. | Description | Qty | Remarks |
|---|---|---|---|---|
| 32 | 6078 | PLAIN WASHER 12 X 5.2 X 1 | 2 | |
| 33 | 6965 | SPRING WASHER DIA 5 | 2 | |
| 34 | 20105 | PLAIN NUT M5 | 2 | |
| 35 | 31058 | HEX HEAD SCREW M5 X 16 CC8.8 | 22 | |
| 36 | 6965 | SPRING WASHER DIA 5 | 2 | |
| 37 | 20105 | PLAIN NUT M5 | 2 | |
| 38 | 567498R | BRAKE/REVERSE LIGHT SW (INTEGRAL CAP)-PAV | 21 | |
| 39 | 20105 | PLAIN NUT M5 | 1 | |
| 40 | 3055 | PLAIN WASHER M5 | 1 | |
| 41 | B075693 | MTG BKT ONE WAY FUSE - HOLDER | 1 | |
| 42 | 568692 | PAN SELF TAP SCREW 6SG X 16AB | 1 | |
| 43 | 31088 | HEX HD SCREW M6 X 16 CL 8.8 (811061623) | 1 | |
| 44 | 3056 | PLAIN WASHER M6 OD12 | 1 | |
| 45 | 016406 | SPRING WASHER | 1 | |
| 46 | 680166 | SAFETY STARTER RELAY | 1 | |
| 47 | B023727R | CONTACTOR | 1 | |
| 48 | B073685 | WIPER MOTOR ASSY. WITH MTG. BKT. | 1 | |
| 49 | B073821 | BUNDY TUBE OUTER (UP) | 1 | |
| 50 | B073682 | WIPER BUNDY - MOTOR TO WHEEL BOX | 1 | |
| 51 | B073600 | WIPER ARM & BLADE ASSY | 1 | |
| 51A | 632292 | WIPER ARM & BLADE ASSY | 1 | STEP-2 BS3 HS LAM PTL |
| 52 | B076304 | WHEEL BOX ASSY. (MOD.) | 1 | |
| 53 | 569165 | DOME NUT | 1 | |
| 54 | 016406 | SPRING WASHER | 1 | |
| 55 | 20106 | HEX NUT M6 | 6 | |
| 56 | 3056 | PLAIN WASHER M6 OD12 | 6 | |
| 57 | 31088 | HEX HD SCREW M6 X 16 CL 8.8 (811061623) | 6 | |
| 58 | B024948R | BAT + VE _BC SW -4ST REL(CITY 200 C/L) | 1 | |
| 59 | 925786 | ECU - FUSE (2A) (N.I) | 1 | |
| 60 | 31088 | HEX HD SCREW M6 X 16 CL 8.8 (811061623) | 2 | |
| 61 | 016406 | SPRING WASHER | 2 | |
| 62 | B073715 | CABIN LAMP | 1 | |
| 63 | 20106 | HEX NUT M6 | 2 | |
| 64 | B073492 | PLASTIC COVER-ELECTRICAL CLUSTER | 1 | |
| 65 | B024532 | KEY IGNITION SWITCH W/COUPLER (PAVNA) | 1 | |

**76**

Print Date: 07-Apr-2022

**PLATE-28**
**Electrical Devices**

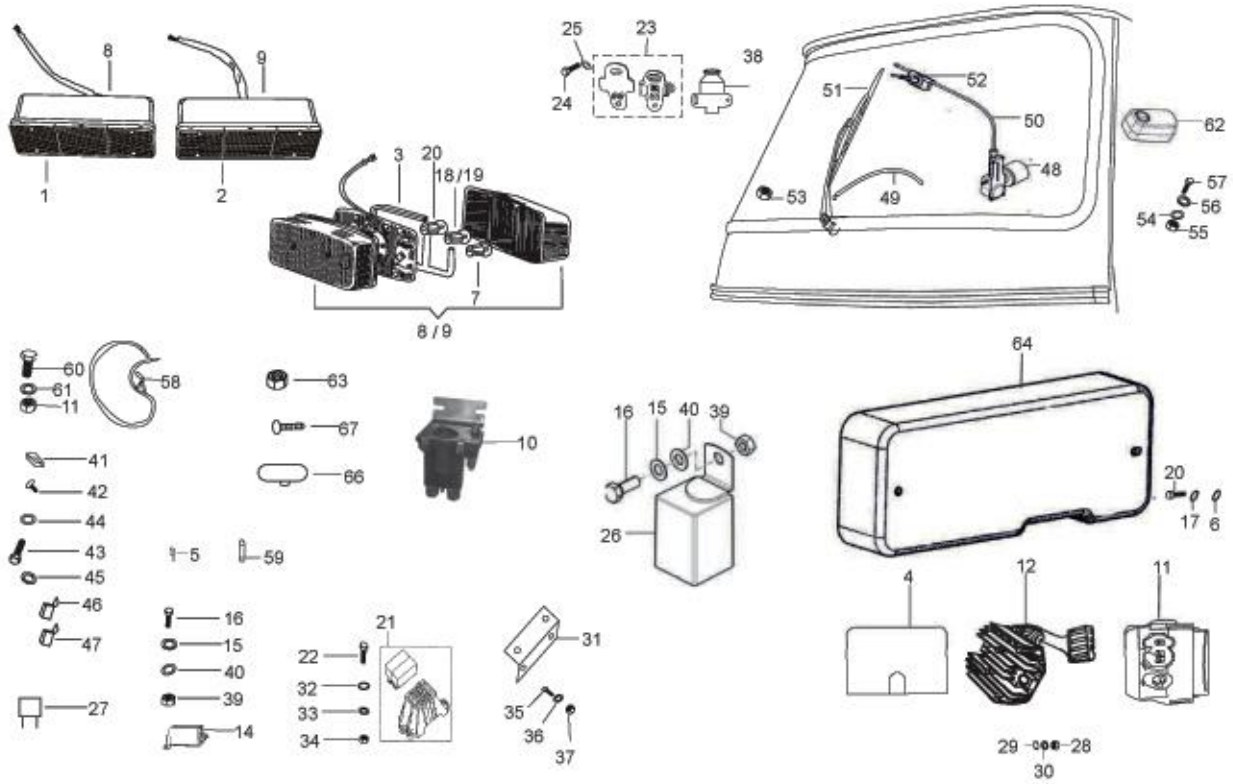
8
9
1
2
25
23
24
38
51
52
50
62
3
20
18/19
48
53
49
57
56
54
55
7
8 / 9
60
61
11
58
63
67
66
10
16
15
40
39
64
41
42
44
43
45
46
47
5
59
26
20
17
6
4
12
11
16
15
40
39
14
27
21
22
32
33
34
31
35
36
37
29
28
30

77

Print Date: 07-Apr-2022

**PLATE-28**

**Electrical Devices**

| Fig. No. | Part No. | Description | Qty | Remarks |
|---|---|---|---|---|
| 66 | B074491 | ENGINE COMPARTMENT LAMP WITH PIGTAIL (UP) | 1 | |
| 67 | B074539 | PHILIPS COUNTER HEAD SCREW | 2 | |

78

Print Date: 07-Apr-2022

**PLATE-29**
**Front Fascia**

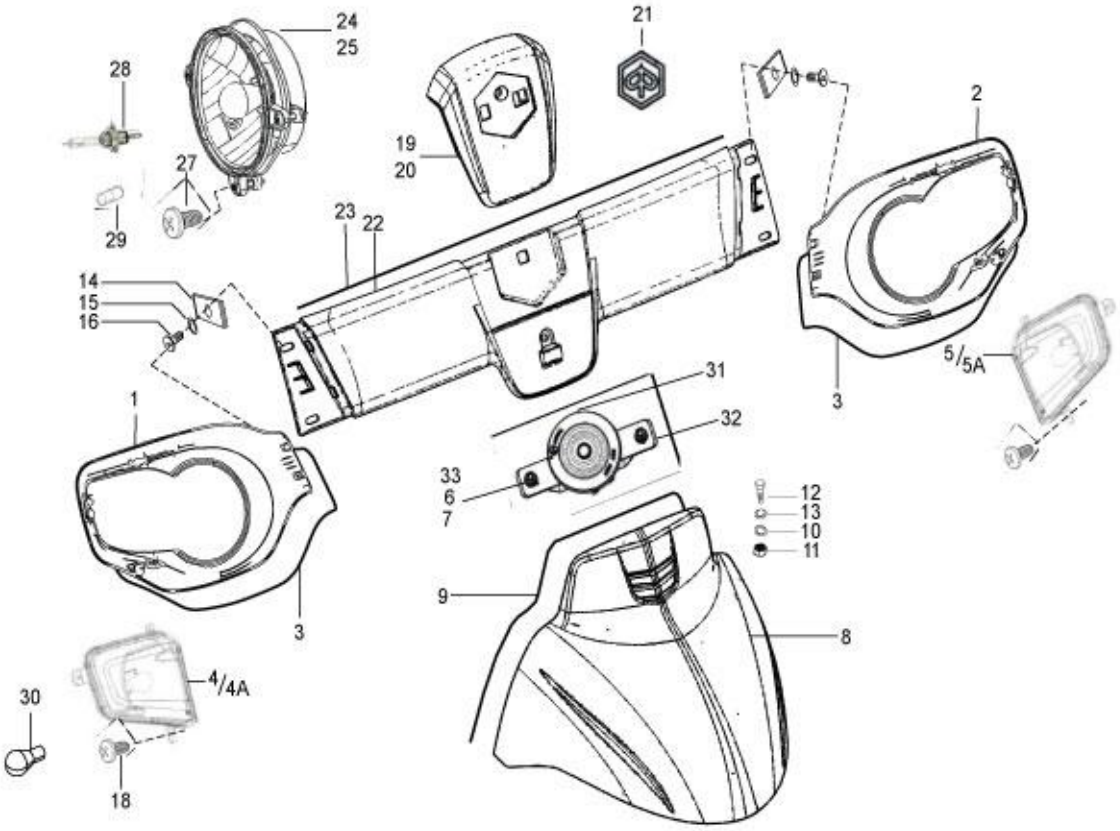
24
25
21
28
2
19
20
27
29
23
22
14
15
16
5/5A
31
3
1
32
33
6
7
12
13
10
11
9
8
3
4/4A
30
18

79

Print Date: 07-Apr-2022

**PLATE-29**

**Front Fascia**

| Fig. No. | Part No. | Description | Qty | Remarks |
|---|---|---|---|---|
| 1 | B074434 | BEZEL_HEADLAMP BLINKER (RH) | 1 | E - Marked (Export) |
| 2 | B074433 | BEZEL_HEADLAMP BLINKER (LH) | 1 | E - Marked (Export) |
| 3 | B073969 | HL BEZEL BEADING | 2 | |
| 4 | 6D000146R | FRONT DIRECTION INDICATORS RH | 1 | E - Marked (Export) |
| 4A | B078272 | BLINKER HOUSING (RH)-(HOUSING + GLASS) | 1 | |
| 5 | 6D000145R | FRONT DIRECTION INDICATORS LH | 1 | E - Marked (Export) |
| 5A | B078274 | BLINKER HOUSING (LH)-(HOUSING + GLASS) | 1 | |
| 6 | 3056 | PLAIN WASHER M6 OD12 | 4 | |
| 7 | 20106 | HEX NUT M6 | 4 | |
| 8 | B073882WR | FRONT MUDGUARD - PAINTED-WR | 1 | |
| 8 | B073882BW | FRONT MUDGUARD - PAINTED-BW | 1 | |
| 8 | B073882GY | FRONT MUDGUARD - PAINTED - GY | 1 | |
| 8 | B073882CB | FRONT MUDGUARD - PAINTED -CB | 1 | |
| 8 | B073882EG | FRONT MUDGUARD - PAINTED - EG | 1 | |
| 8 | B073882NB | FRONT MUDGUARD - PAINTED - NB | 1 | |
| 8 | B073882BL | FRONT MUDGUARD - PAINTED - BL | 1 | |
| 9 | - | NOT SERVICEABLE | 1 | NS |
| 10 | 013880 | PLAIN WASHER | 8 | |
| 11 | 20106 | HEX NUT M6 | 4 | |
| 12 | 31089 | HEX HEAD SCREW M6X18 CL 8.8 | 4 | |
| 13 | 78307 | BENT SPRING WASHER M6 | 4 | |
| 14 | 8080 | SPRING PLATE | 4 | |
| 15 | 3055 | PLAIN WASHER M5 | 10 | |
| 16 | 660168 | PAN SELF TP. SCREW 10 SGX13AB | 5 | |
| 17 | 157716 | SCREW ANCHORE | 8 | |
| 18 | B074539 | PHILIPS COUNTER HEAD SCREW | 4 | |
| 19 | B073875 | LOGO SUPPORT - NOT PAINTED | 1 | |
| 20 | B073875SL | LOGO SUPPORT - PAINTED | 1 | |
| 21 | B076120 | HEXAGONAL EMBLEM | 1 | |
| 22 | B073872 | CENTRAL FACIA | 1 | |
| 23 | B073970 | CENTRAL FACIA BEADING UPPER | 1 | |
| 24 | 6D000143R | HEAD LAMP ASSLY LH - NUOVO | 1 | E - Marked (Export) |
| 25 | 6D000144R | HEAD LAMP ASSLY - RH (NUOVO) | 1 | E - Marked (Export) |
| 26 | 119735 | PROTECTION SECURING SPRING/SPR. FOR PROTECTION | 2 | |
| 27 | 15900 | HEAD LAMP SECURING SCREW/PAN SELF TAP SCREW | 6 | |

80

Print Date: 07-Apr-2022

**PLATE-29**
**Front Fascia**

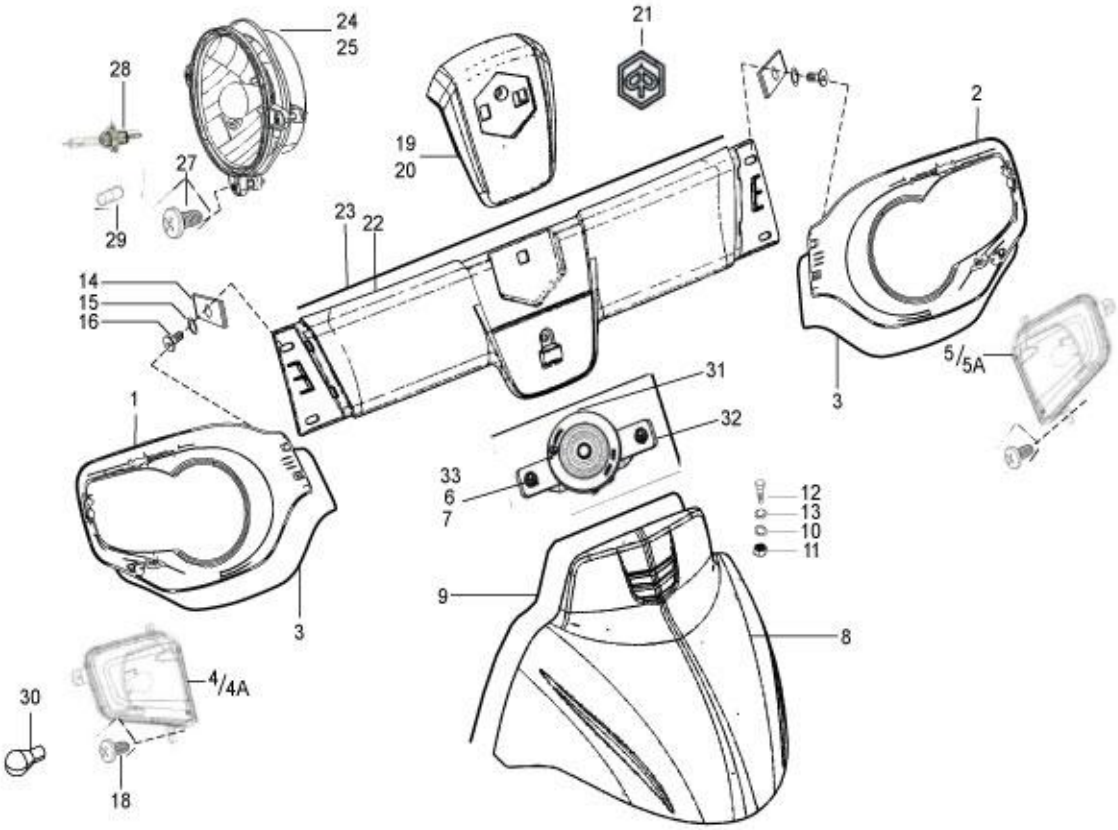
24
25
21
28
2
19
20
27
29
23
22
14
15
16
5/5A
31
1
32
3
33
6
7
12
13
10
11
9
8
3
4/4A
30
18

81

Print Date: 07-Apr-2022

**PLATE-29**

**Front Fascia**

| Fig. No. | Part No. | Description | Qty | Remarks |
|---|---|---|---|---|
| 28 | B078286R | HS1_BULB ( 12 V _35/35W | 2 | |
| 29 | 567593 | BULB 12V 5W / LAMP 4W | 2 | |
| 30 | 925581 | INDICATOR LIGHT BULB 12V 21W AMBER COLOUR | 2 | |
| 31 | B074033 | HORN ASSLY(DIA 70) | 1 | E - Marked (Export) |
| 32 | B073953 | HORN MTG. BKT S/A | 1 | |
| 33 | 016406 | SPRING WASHER | 4 | |
| 34 | 3056 | PLAIN WASHER M6 OD12 | 4 | |
| 35 | 20106 | HEX NUT M6 | 4 | |

82

Print Date: 07-Apr-2022

**PLATE-30**

**Open Box Body (Pick UP)**

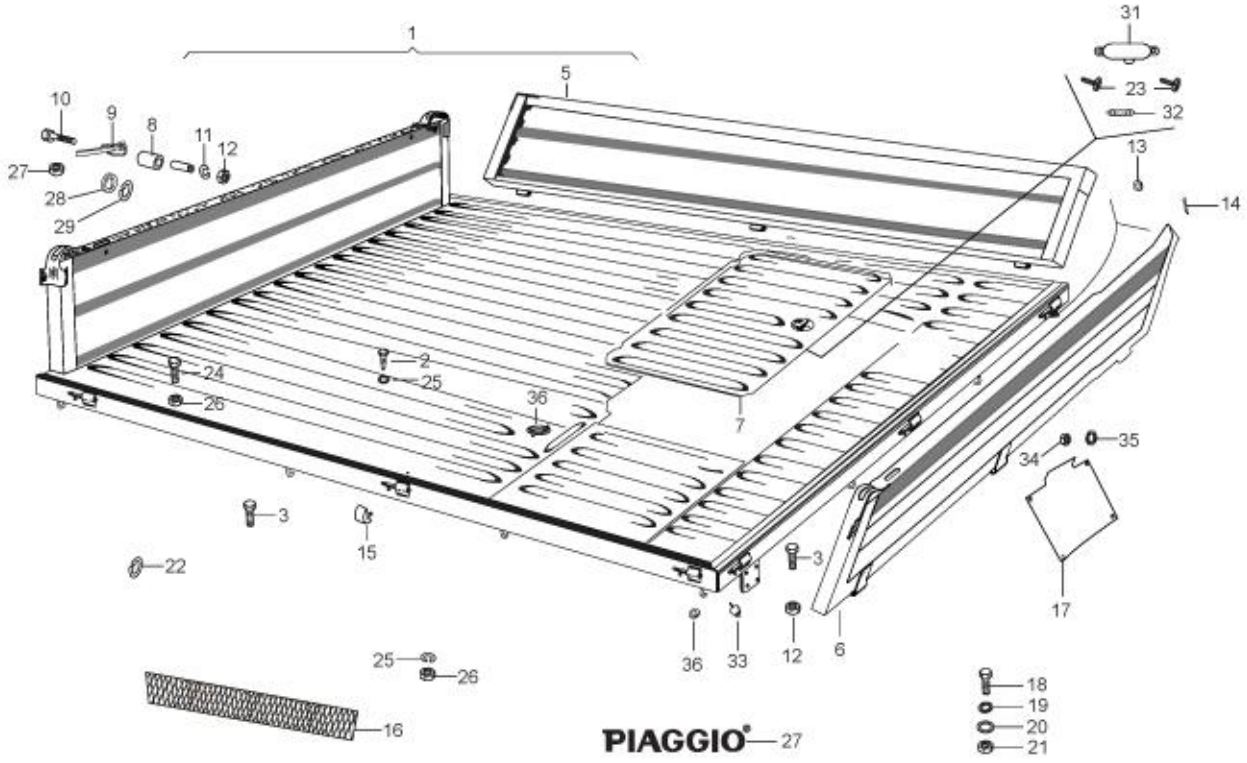
1
5
31
23
32
13
14
10
9
8
11
12
27
28
29
2
25
24
26
36
7
35
34
3
15
22
3
17
36
33
12
6
25
26
16
PIAGGIO
27
18
19
20
21

83

Print Date: 07-Apr-2022

**PLATE-30**

**Open Box Body (Pick UP)**

| Fig. No. | Part No. | Description | Qty | Remarks |
|---|---|---|---|---|
| 1 | B073531EG | APE CITY CARGO BODY ASSLY PUP-CNG/LPG-EG | 1 | |
| 1 | B073531CO | APE CITY CARGO BODY ASSLY PUP-CNG/LPG-CO | 1 | |
| 1 | B073531GY | APE CITY CARGO BODY ASSLY PUP - CNG/LPG-GY | 1 | |
| 1 | B073531CB | APE CITY CARGO BODY ASSLY PUP - CNG/LPG-CB | 1 | |
| 1 | B073531BW | APE CITY CARGO BODY ASSLY PUP - CNG/LPG-BW | 1 | |
| 1 | B073531SY | APE CITY CARGO BODY ASSLY PUP - CNG/LPG-SY | 1 | |
| 1 | B076050EG | APE CITY CARGO BODY ASSLY PUP - PETROL-EG | 1 | |
| 1 | B076050CO | APE CITY CARGO BODY ASSLY PUP - PETROL-CO | 1 | |
| 1 | B076050GY | APE CITY CARGO BODY ASSLY PUP - PETROL-GY | 1 | |
| 1 | B076050CB | APE CITY CARGO BODY ASSLY PUP - PETROL-CB | 1 | |
| 1 | B076050BW | APE CITY CARGO BODY ASSLY PUP - PETROL-BW | 1 | |
| 1 | B076050SY | APE CITY CARGO BODY ASSLY PUP - PETROL-SY | 1 | |
| 2 | 8265 | SELF TAPPING SCREW | 12 | |
| 3 | 31119 | HEX HD SCREW M8 X 25 | 6 | |
| 4 | 643500 | LOCK SET WITH KEYS (PU) (COMMON KEY) | 1 | |
| 5 | B073523ED | SIDE PANEL ASSLY APE CITY CARGO -BSIV | 1 | |
| 6 | B073526ED | TAIL GATE PANEL ASSLY APE CITY CARGO-BSIV | 1 | |
| 7 | B075186ED | ENGINE INSPECTION DOOR PAX CARGO | 1 | |
| 8 | 109361 | BUFFER (ENGINE INSPECTION COVER) | 2 | |
| 9 | 128804ED | LH LEVER FOR CLAMPING THE SIDE PANEL CED | 1 | |
| 9 | 128805ED | RH LEVER FOR CLAMPING THE SIDE PANEL CED | 1 | |
| 10 | 30074 | HEX HEAD BOLT M8 X 40 CL 8.8 | 2 | |
| 11 | 016408 | SPRING WASHER | 8 | |
| 12 | 20108 | HEX NUT M8 | 4 | |
| 13 | 3057 | PL. WASHER 13 X 7 X 1 | 4 | |
| 15 | B077358 | STOP BUFFER | 4 | |
| 16 | 661262 | YELLOW REFLECTIVE TAPE | 2 | |
| 17 | 643661 | LICENSE PLATE MTG. BKT. | 1 | |
| 18 | 31058 | HEX HEAD SCREW M5 X 16 CC8.8 | 4 | |
| 19 | 16405 | SPRING WASHER M5 | 4 | |
| 20 | 3055 | PLAIN WASHER M5 | 4 | |
| 21 | 20105 | PLAIN NUT M5 | 4 | |
| 22 | 16603 | PLAIN WASHER (METALLIC) | 8 | |
| 23 | 15727 | PAN SELF TAPPING SCREW | 4 | |
| 24 | 31089 | HEX HEAD SCREW M6X18 CL 8.8 | 6 | |

| | | | | |
|---|---|---|---|---|
| | | | | |

84

Print Date: 07-Apr-2022

**PLATE-30**

**Open Box Body (Pick UP)**

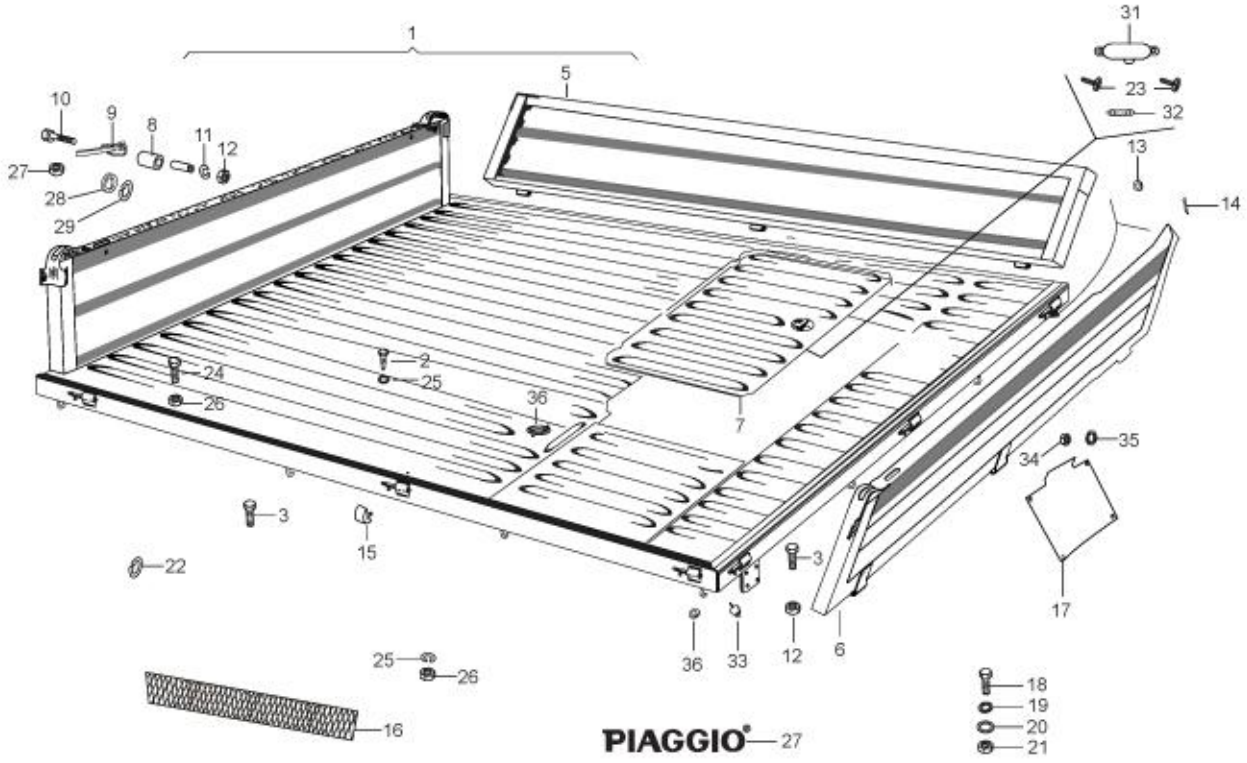
1
5
31
23
32
13
14
10
9
8
11
12
27
28
29
2
25
24
26
36
7
35
34
3
15
22
3
17
36
33
12
6
25
26
16
PIAGGIO
27
18
19
20
21

85

Print Date: 07-Apr-2022

**PLATE-30**

**Open Box Body (Pick UP)**

| Fig. No. | Part No. | Description | Qty | Remarks |
|---|---|---|---|---|
| 25 | 016406 | SPRING WASHER | 4 | |
| 26 | 20106 | HEX NUT M6 | 4 | |
| 28 | 12138 | NYLOCK NUT M6 | 2 | |
| 27 | 662323 | PIAGGIO TAIL GATE (YESHSHREE) STICKER FOR LIGHT COLOUR SHADE | 1 | |
| 29 | 3058 | PLAIN WASHER 15X8.4X1.5 | 8 | |
| 30 | 005967 | CIRCLIP / DIA 7E | 4 | |
| 31 | 150041R | CABIN LIGHT ASSY. (W/O BULB) | 1 | |
| 32 | 71633 | STOP AND PARKING BULB 12V 10/5 W | 1 | |
| 33 | 567732 | BUFFER | 2 | |
| 34 | 20106 | HEX NUT M6 | 2 | |
| 35 | 016406 | SPRING WASHER | 2 | |
| 36 | B024501 | PLASTIC COVER PLUG-CARGO | 4 | |
| 37 | 30074 | HEX HEAD BOLT M8 X 40 CL 8.8 | 1 | |

86

Print Date: 07-Apr-2022

**PLATE-31**
**Wiring Harness**

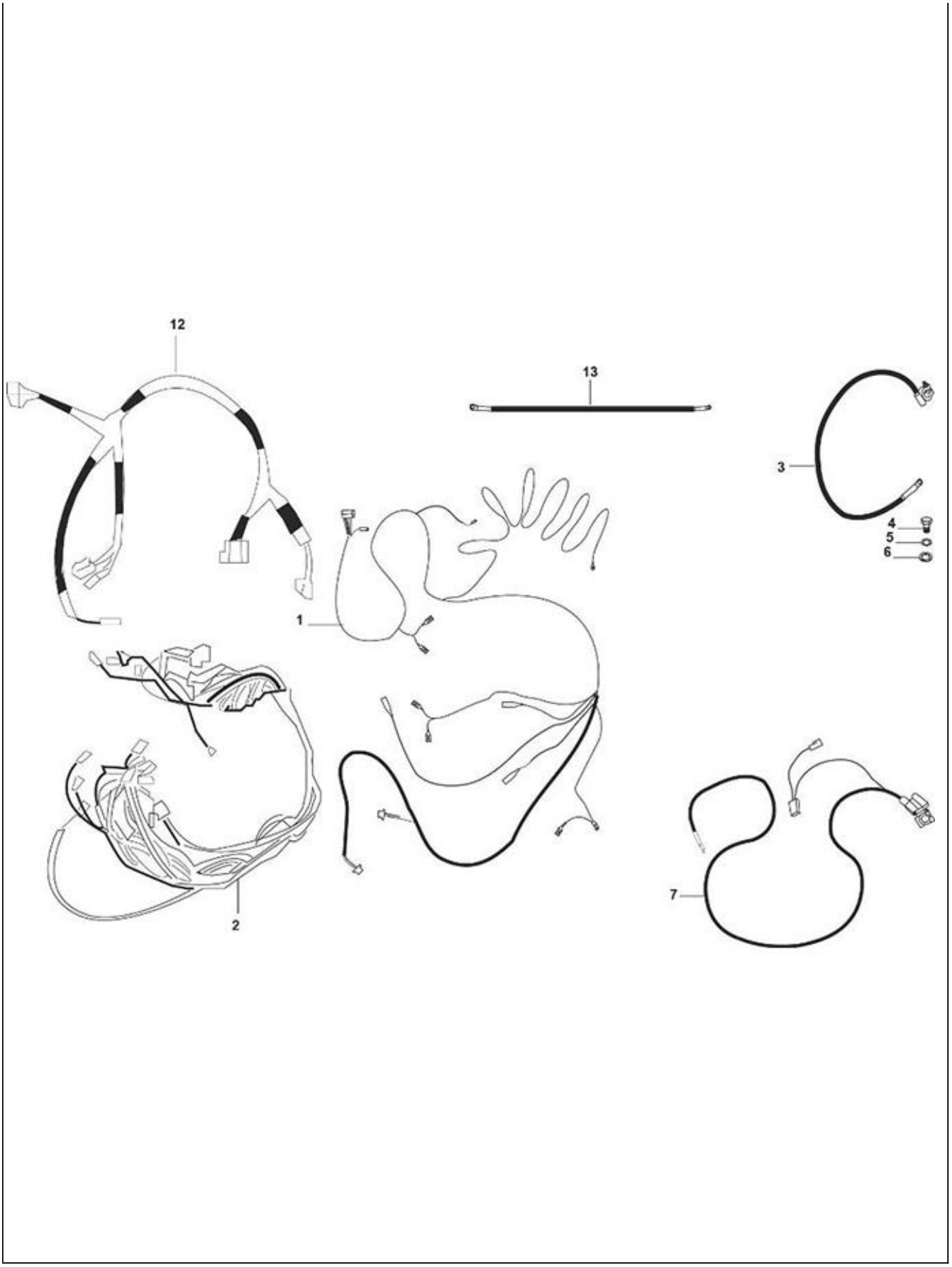
12
13
3
4
5
6
1
2
7

87

Print Date: 07-Apr-2022

**PLATE-31**

**Wiring Harness**

| Fig. No. | Part No. | Description | Qty | Remarks |
|---|---|---|---|---|
| 1 | B077249 | WIRING HARNESS INSTRUMENT PANEL-PETROL | 1 | |
| 1 | B077250 | WHS MAIN _ CITY BS IV _ LPG ( SN) | 1 | |
| 1 | B077251 | W/HS MAIN_CITY CARGO BSIV (CNG) | 1 | |
| 2 | B077249 | WIRING HARNESS INSTRUMENT PANEL-PETROL | 1 | |
| 2 | B073979 | WIRING HARNESS INSTRUMENT PANEL (CNG/LPG) | 1 | |
| 3 | 644838R | BATTERY CABLE -VE | 1 | |
| 4 | 31088 | HEX HD SCREW M6 X 16 CL 8.8 (811061623) | 1 | |
| 5 | 3056 | PLAIN WASHER M6 OD12 | 1 | |
| 6 | 016406 | SPRING WASHER | 1 | |
| 7 | B078213 | BATTERY +VE CABLE-CUT STARTER MOTOR (LPG/CNG) | 1 | |
| 7 | B074214 | BATTERY CABLE POSITIVE NO.1 CITY CARGO P | 1 | |
| 8 | B003110R | PIG TAIL FUEL TANK | 1 | |
| 9 | B073320R | PIG TAIL- CABIN LAMP (NEW)-PASSENGER | 1 | |
| 10 | B078003 | GAS KIT W/ HS- LPG- PAX 200- ( RH SHIFT) | 1 | |
| 10 | B078002 | GASKIT W/HS - LPG (PAX 200 CARGO) | 1 | |
| 11 | - | NOT SERVICEABLE | 1 | |
| 12 | B023968 | ENGINE WIRING HARNESS (PET) (CNG&LPG) | 1 | |
| 13 | 1D001894 | GROUND WIRE | 1 | |
| 14 | B075108 | ADAPTOR PIGTAIL -ACCESSORIES(3WH) | 1 | |

88

Print Date: 07-Apr-2022

**PLATE-32**

**Front Brake Assembly**

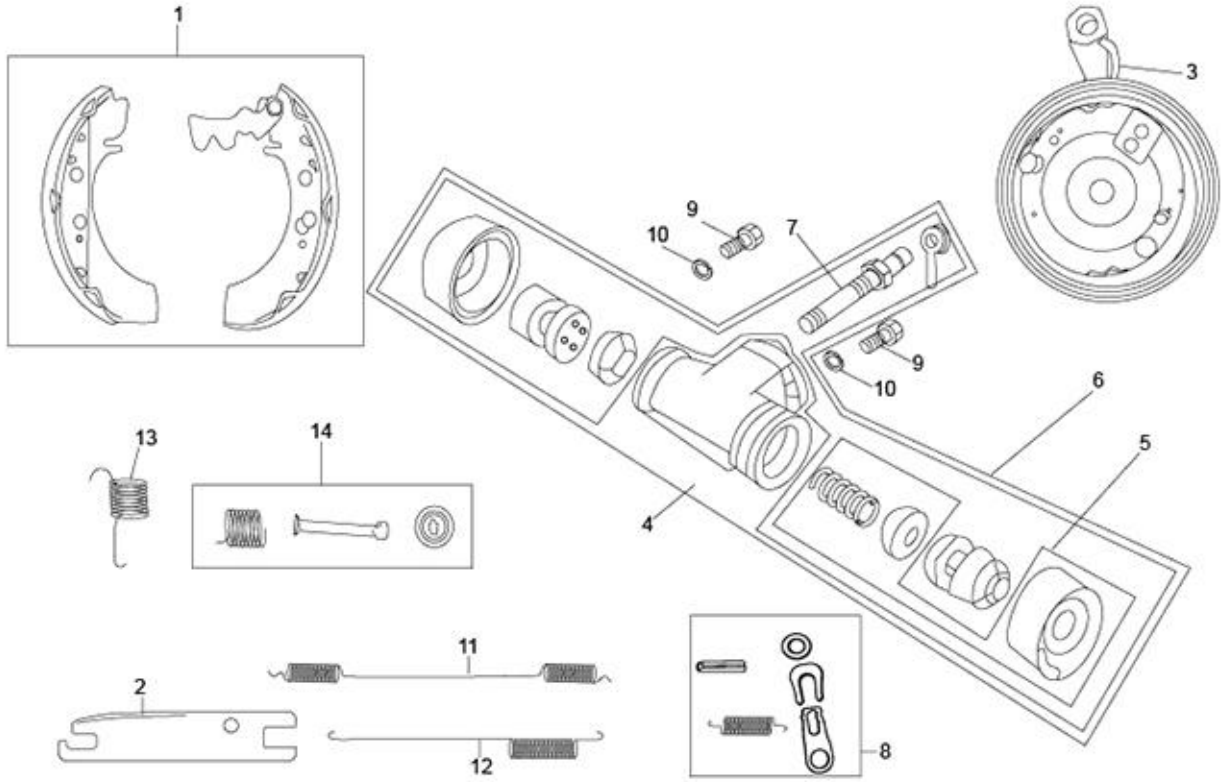
1
3
9
10
7
9
10
6
5
13
14
4
11
2
12
8

89

Print Date: 07-Apr-2022

**PLATE-32**

**Front Brake Assembly**

| Fig. No. | Part No. | Description | Qty | Remarks |
|---|---|---|---|---|
| 1 | KIT95033 | FRONT BRAKE LINERS KIT | 1 | |
| 2 | B003008 | STRUT FRONT | 1 | |
| 3a | B024113 | FRONT BRAKE ASSY. | 1 | |
| 4 | B003017 | WHEEL CYLINDER ASSY. | 1 | |
| 5 | B003325 | MINOR KIT WHEEL CYLINDER | 1 | |
| 6 | B003324 | MAJOR KIT WHEEL CYLINDER | 1 | |
| 7 | B003300 | BLEEDER SCREW | 1 | |
| 8 | B006509 | CLIP & PIN KIT | 1 | |
| 9 | 63440 | BOLT M6X12 | 2 | |
| 10 | 12536 | SPRING WASHER | 2 | |
| 11 | B003004 | SHOE RETURN SPRING (UPPER) | 1 | |
| 12 | B003003 | SHOE RETURN SPRING (LOWER) | 1 | |
| 13 | B003002 | STRUT SPRING | 1 | |
| 14 | KIT95036 | SHOE HOLD DOWN KIT | 1 | |

90

Print Date: 07-Apr-2022

**PLATE-33**

**Rear Brake Assembly**

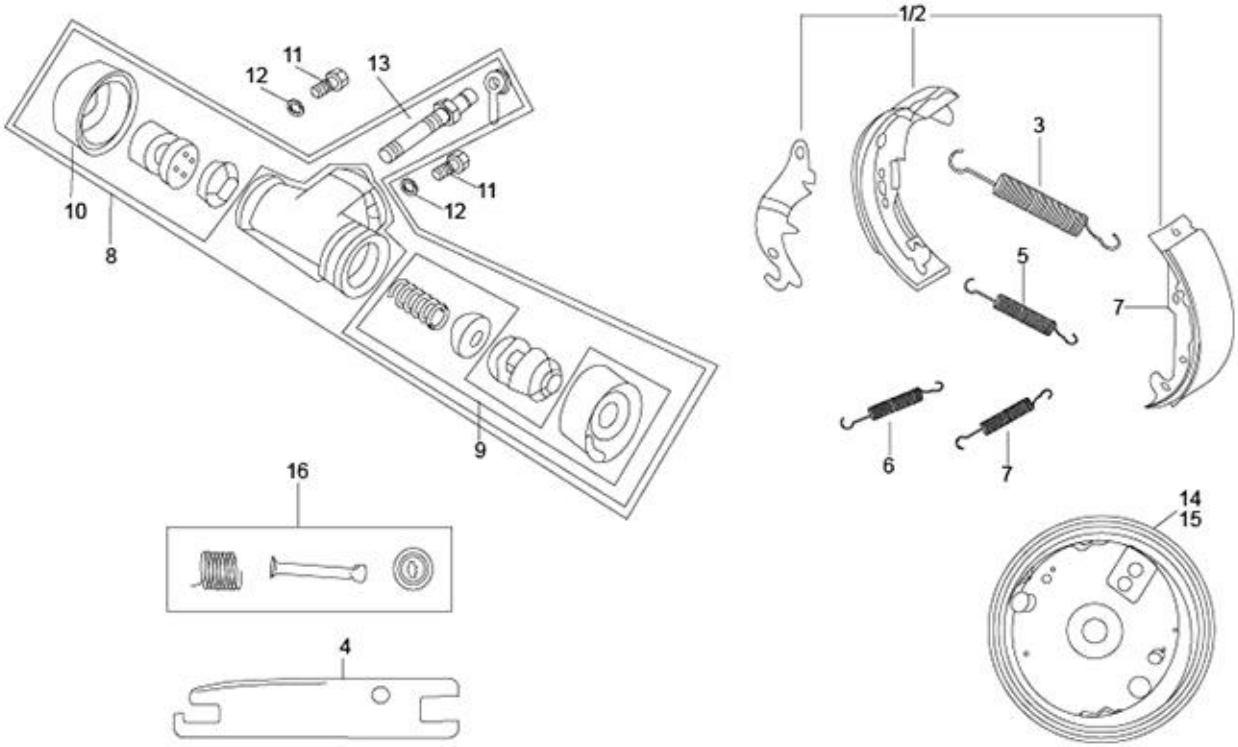
1/2
11
12
13
3
11
12
10
8
5
7
9
6
7
16
14
15
4

91

Print Date: 07-Apr-2022

**PLATE-33**

**Rear Brake Assembly**

| Fig. No. | Part No. | Description | Qty | Remarks |
|---|---|---|---|---|
| 1 | B003330 | REAR BRAKE SHOE KIT LH | 1 | |
| 2 | B003331 | REAR BRAKE SHOE KIT RH (NI) | 1 | |
| 3 | B003004 | SHOE RETURN SPRING (UPPER) | 2 | |
| 4 | B003012 | STRUT REAR | 2 | |
| 5 | B003003 | SHOE RETURN SPRING (LOWER) | 2 | |
| 6 | B003011 | STRUT SPRING RH | 1 | |
| 7 | B003002 | STRUT SPRING | 1 | |
| 8 | B003014 | WHEEL CYLINDER ASSY. DIA.25.4 MM | 1 | |
| 9 | 925574 | MINOR KIT WHL CYL. RR | 1 | |
| 10 | B003328 | MAJOR KIT WHEEL CYLINDER | 1 | |
| 11 | B002486 | BOLT M8 X 35 6G CL 12.9 | 4 | |
| 12 | 12536 | SPRING WASHER | 4 | |
| 13 | B003300 | BLEEDER SCREW | 2 | |
| 14 | B001228 | BRAKE PLATE ASSY. RH | 1 | |
| 15 | B001225 | BRAKE PLATE ASSY. LH (N.I.) | 1 | |
| 16 | B003327 | SHOE HOLD DOWN KIT | 1 | |

92

Print Date: 07-Apr-2022

**PLATE-34**

**Cables**

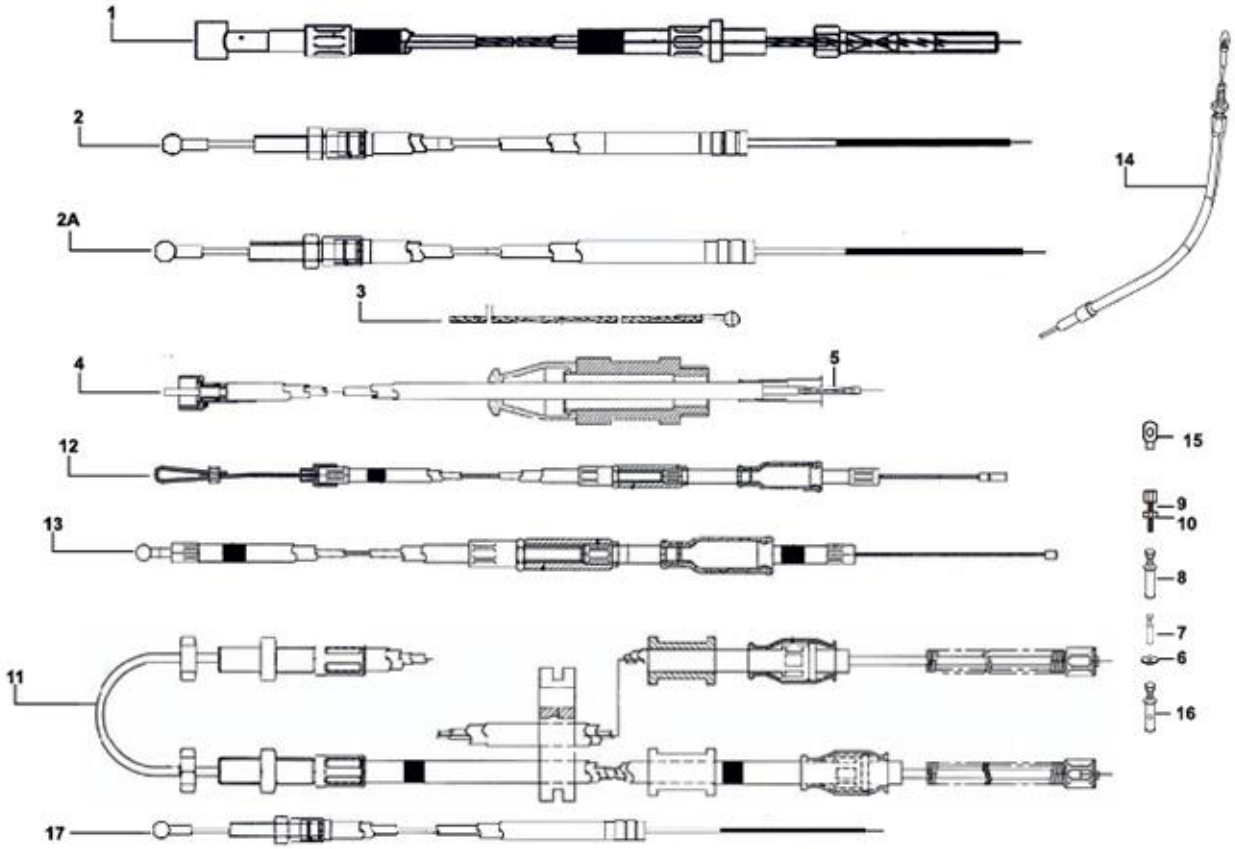
1
2
2A
3
4
5
12
13
11
17
14
15
9
10
8
7
6
16

93

Print Date: 07-Apr-2022

**PLATE-34**
**Cables**

| Fig. No. | Part No. | Description | Qty | Remarks |
|---|---|---|---|---|
| 1 | B075566 | CLUTCH CONTROL TRANSMISSION ASSLY. | 1 | |
| 2 | B073469 | CABLE,GEAR CONTROL ASSLY NO.2 | 1 | |
| 2A | B075716 | CABLE,GEAR CONTROL ASSLY -WHITE | 1 | |
| 3 | 6A000068 | INNER GEAR CONTROL CABLE (BLACK/WHITE) | 1 | |
| 3 | 6A000069 | SHIFT CONTROL CABLE INNER (WHITE) | 1 | |
| 4 | 645124 | SPEEDO CABLE | 1 | PTL |
| 4 | B076208 | SPEEDO CABLE | 1 | CNG/LPG |
| 5 | 6A001834 | FLEXIBLE TRANSMISSION CABLE WITH WASHER | 1 | Speedo Inner for B076208 |
| 7 | B076078 | SCREW TERMINAL ASSLY(REVERSE CABLE) | 1 | |
| 8 | B076364 | SCREW TERMINAL ASSY. - GEAR CONTROL | 2 | |
| 9 | 197071 | ADJUSTER SCREW M6 | 2 | |
| 10 | 20106 | HEX NUT M6 | 2 | |
| 11 | B041774 | PARKING BRAKE CABLE ASSY | 1 | |
| 12 | B075565 | CABLE ASSLY CHOKE CONTROL | 1 | |
| 13 | B042356 | ACCELERATOR CABLE WITH JONT (NEW) | 1 | |
| 14 | B076036 | ASSLY REVERSE GEAR CONTROL CABLE | 1 | |
| 14.1 | 6A000070 | REVERSE GEAR INNER CABLE | 1 | NI |
| 15 | 1A008804 | REVERSE CABLE REACTION BRACKET | 1 | |
| 16 | B076364 | SCREW TERMINAL ASSY. - GEAR CONTROL | 1 | |
| 17 | B076036 | ASSLY REVERSE GEAR CONTROL CABLE | 1 | |

94

Print Date: 07-Apr-2022

**PLATE-35**
**CNG Kit**

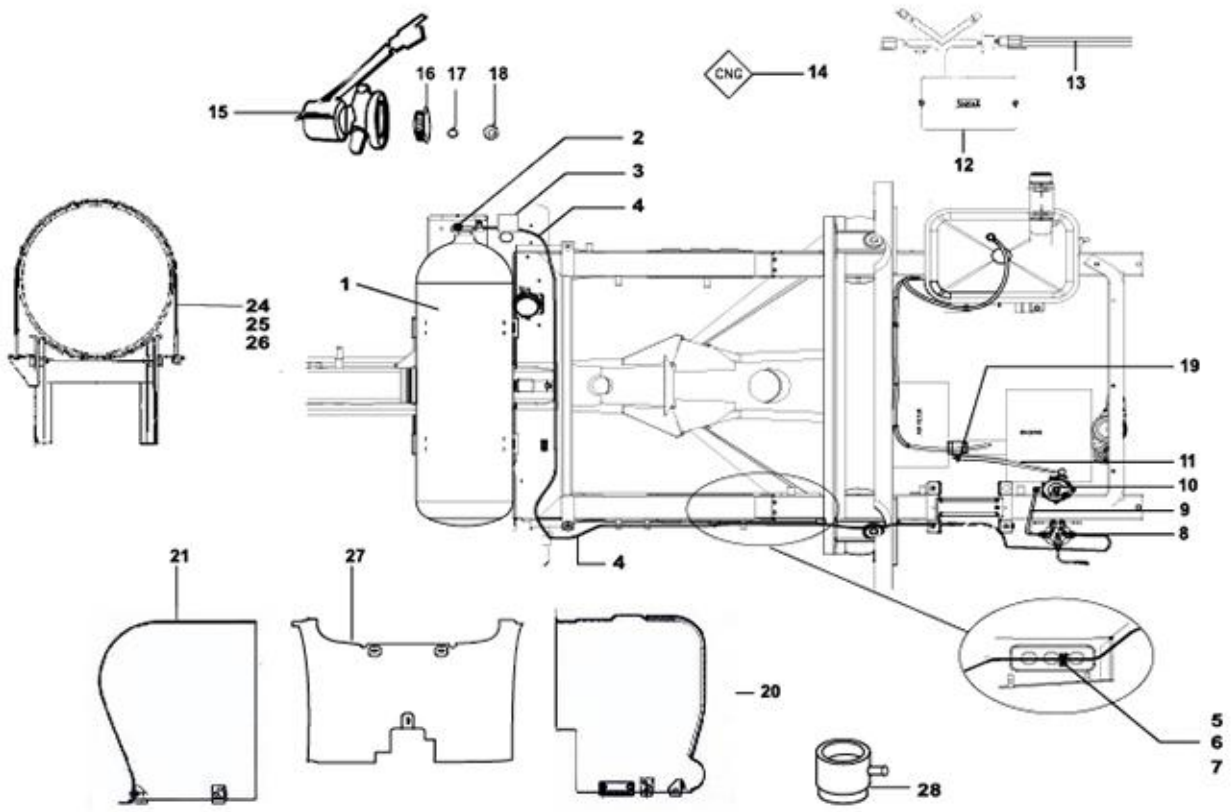
15
16
17
18
CNG
14
13
12
2
3
4
1
24
25
26
19
11
10
9
8
4
21
27
20
5
6
7
28

95

Print Date: 07-Apr-2022

**PLATE-35**
**CNG Kit**

| Fig. No. | Part No. | Description | Qty | Remarks |
|---|---|---|---|---|
| 1 | B024601R | GAS CYLINDER 30LTR. | 1 | |
| 2 | B041784 | CNG PRESSURE GAUGE WITH SENSOR | 1 | |
| 3 | B024131 | FIRST STAGE REDUCTION UNIT (HPR) | 1 | |
| 4 | B075043 | FLEXIBLE HOSE ASSLY (HPR TO FSV) | 1 | |
| 5 | B024194 | CLAMP | 3 | |
| 6 | 643964 | SCREW | 3 | |
| 7 | 861990 | WASHER | 3 | |
| 8 | B075638 | FILTER SOLENOID VALVE (CNG) | 1 | |
| 9 | B075982 | LOW PRESS CNG HOSE | 1 | |
| 10 | B077333 | 2 STAGE CNG REGULATOR | 1 | |
| 11 | B077643 | LOW PRESS CNG HOSE | 1 | |
| 12 | B075862 | ECU_( W/O LED & SW) _CITY BS IV_ CNG | 1 | |
| 13 | 6D000408 | GASKIT W/HS - CNG (PAX 200 CARGO) | 1 | |
| 14 | 643850 | STICKER | 2 | |
| 15 | 932273 | COIL ASSEMBLY | 1 | |
| 16 | 932274 | PAPER FILTER | 1 | |
| 17 | 932275 | O RING | 1 | |
| 18 | 932276 | DRAIN PLUG | 1 | |
| 19 | 932646 | RESTRICTOR -2 FOR CNG | 1 | NS |
| 20 | B076202 | CYLINDER COVER - LPG LH | 1 | |
| 20 | B076203 | CYLINDER COVER - CNG LH | 1 | |
| 21 | B076201 | CYLINDER COVER - RH-COMMON CNG/LPG | 1 | |
| 22 | B009159 | SPIGOT ASSY. | 1 | |
| 23 | B024147 | CLIP | 2 | |
| 24 | B075621 | STRAP ASSLY ( CNG ) | 2 | |
| 25 | 632185 | LOWER STRAPS ASSY. | 2 | |
| 26 | 604863 | UPPER STRAPS ASSY. | 2 | |
| 27 | B076200 | CYLINDER COVER - CENTRAL-COMMON CNG/LPG | 1 | |
| 28 | B076435 | MIXER ASSEMBLY-CNG | 1 | |

96

Print Date: 07-Apr-2022

**PLATE-36**

**Two Stage CNG Regulator**

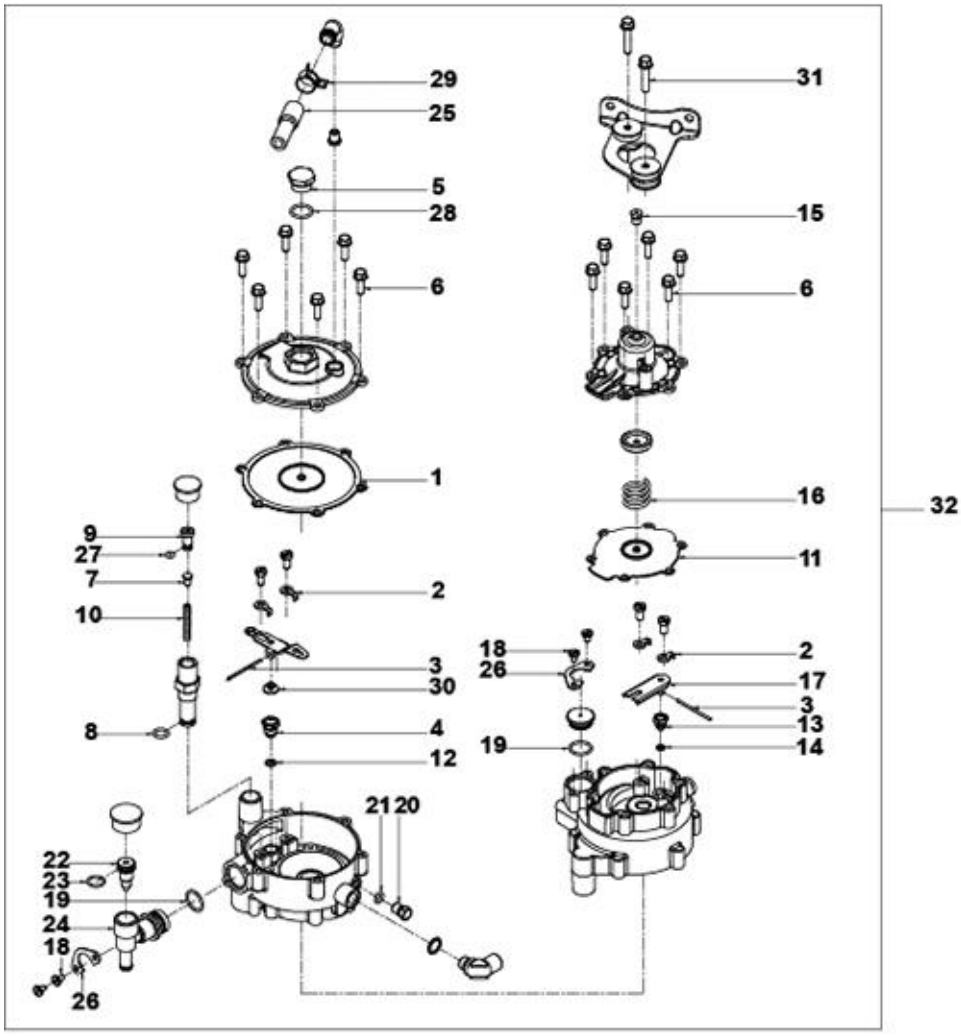
29
25
5
28
6
1
9
27
7
10
8
2
3
30
4
12
21 20
22
23
19
24
18
26
31
15
6
16
11
32
18
26
2
17
3
13
14
19

97

Print Date: 07-Apr-2022

**PLATE-36**

**Two Stage CNG Regulator**

| Fig. No. | Part No. | Description | Qty | Remarks |
|---|---|---|---|---|
| 1 | 932207 | DIAPHRAGM SUB ASSY. | 1 | |
| 2 | 932208 | WASHER | 4 | |
| 3 | 932210 | LEVER PIN | 1 | |
| 4 | 932211 | SEAT | 1 | |
| 5 | 932229 | PLUG | 1 | |
| 6 | 932232 | FLANGE SCREW | 12 | |
| 7 | 932212 | SPRING GUIDE | 1 | |
| 8 | 925781 | O RING | 1 | |
| 9 | 932226 | IDLE SCREW | 1 | |
| 10 | 932213 | SPRING | 1 | |
| 11 | 932215 | DIAPHRAGM SUB ASSY. | 1 | |
| 12 | 932214 | WASHER | 1 | |
| 13 | 932218 | SEAT | 1 | |
| 14 | 932219 | WASHER | 1 | |
| 15 | 932230 | BREATHER-I | 1 | |
| 16 | 932216 | SPRING | 1 | |
| 17 | 932217 | LEVER SUB ASSY. | 1 | |
| 18 | 932220 | CHEESE HEAD SCREW | 1 | |
| 19 | 932221 | O RING | 1 | |
| 20 | 932222 | PLUG | 1 | |
| 21 | 932265 | O RING (R-8101-760) PAXX 200 LPG | 1 | |
| 22 | 932225 | FLOW ADJUSTING SCREW | 1 | |
| 23 | 932242 | ORING | 1 | |
| 24 | 932224 | FLOW CONTROL BODY | 1 | |
| 25 | 932227 | BREATHER HOSE | 1 | |
| 26 | 932228 | CLAMP | 2 | |
| 27 | 932240 | O RING | 1 | |
| 28 | 932231 | O RING | 1 | |
| 29 | 932254 | CLIP | 1 | |
| 30 | 925768 | PAD | 1 | |
| 31 | 932255 | FLANGE SCREW | 1 | |
| 32 | B077333 | 2 STAGE CNG REGULATOR | 1 | |

98

Print Date: 07-Apr-2022

**PLATE-37**

**First Stage Reduction Unit**

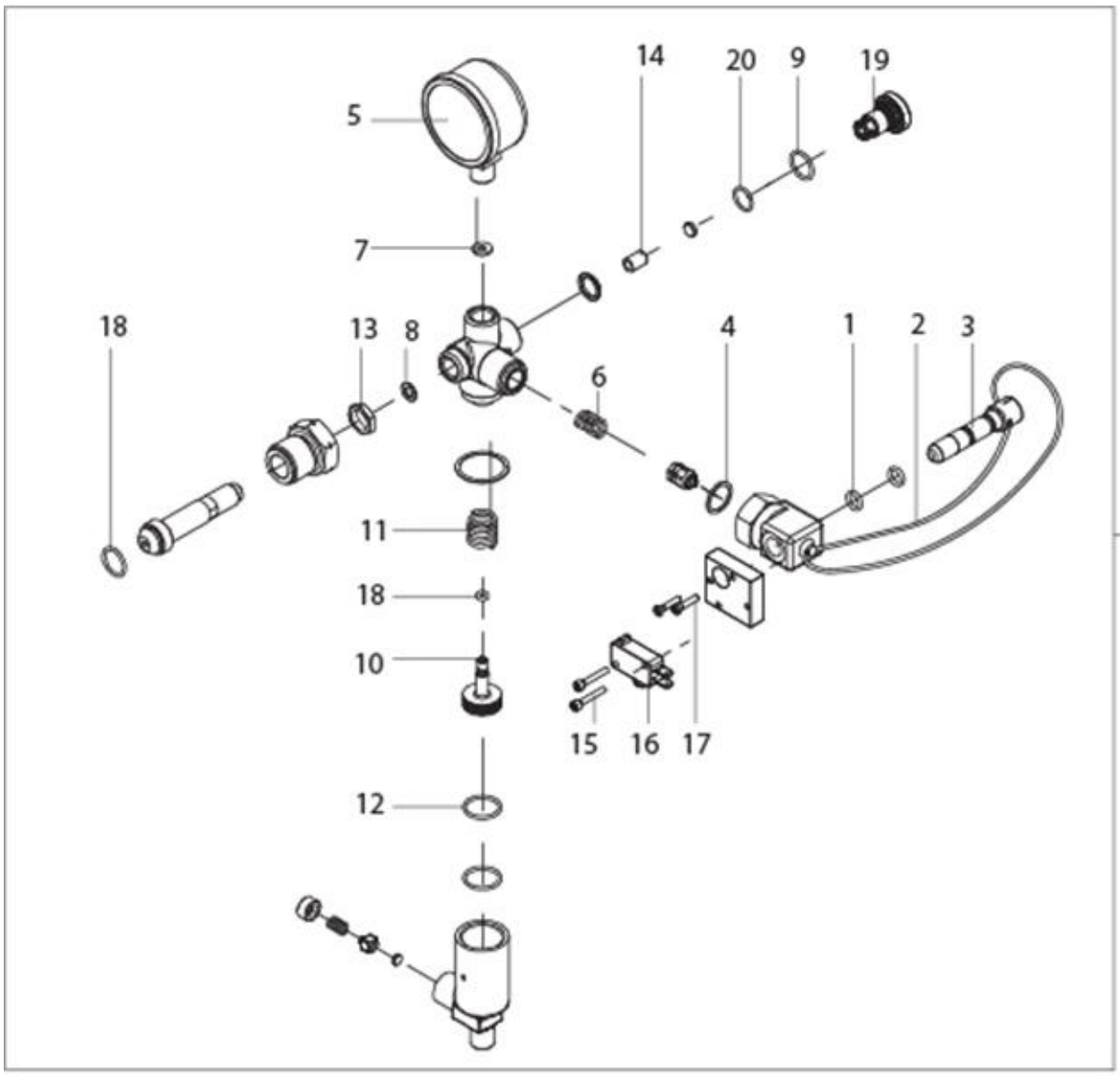
14
20
9
19
5
7
18
13
8
4
1
2
3
6
21
11
18
10
15
16
17
12

99

Print Date: 07-Apr-2022

**PLATE-37**

**First Stage Reduction Unit**

| Fig. No. | Part No. | Description | Qty | Remarks |
|---|---|---|---|---|
| 1 | 929931 | O RING | 2 | |
| 2 | 929933 | STRING | 1 | |
| 3 | 661399 | DUST PLUG | 1 | |
| 4 | 929934 | SEALING WASHER | 1 | |
| 5 | B041784 | CNG PRESSURE GAUGE WITH SENSOR | 1 | |
| 6 | 929935 | SPRING | 1 | |
| 7 | 932233 | WASHER | 1 | |
| 8 | 929936 | WASHER | 1 | |
| 9 | 932235 | O RING | 2 | |
| 10 | 932237 | PISTON SUB ASSY. | 1 | |
| 11 | 932236 | SPRING | 1 | |
| 12 | 932238 | O RING | 1 | |
| 13 | 932239 | LOCK NUT | 1 | |
| 14 | 932243 | FILTER | 1 | |
| 15 | 929938 | PHILIPS HEAD SCREW M3 X 20L | 2 | |
| 16 | 929939 | MICROSWITCH | 1 | |
| 17 | 929940 | PHILIPS HEAD SCREW M3 X 15L | 2 | |
| 18 | 932240 | O RING | 1 | |
| 19 | 932241 | RETAINER | 1 | |
| 20 | 932242 | ORING | 1 | |
| 21 | B024131 | FIRST STAGE REDUCTION UNIT (HPR) | 1 | |

**100**

Print Date: 07-Apr-2022

**PLATE-38**
**LPG Kit**

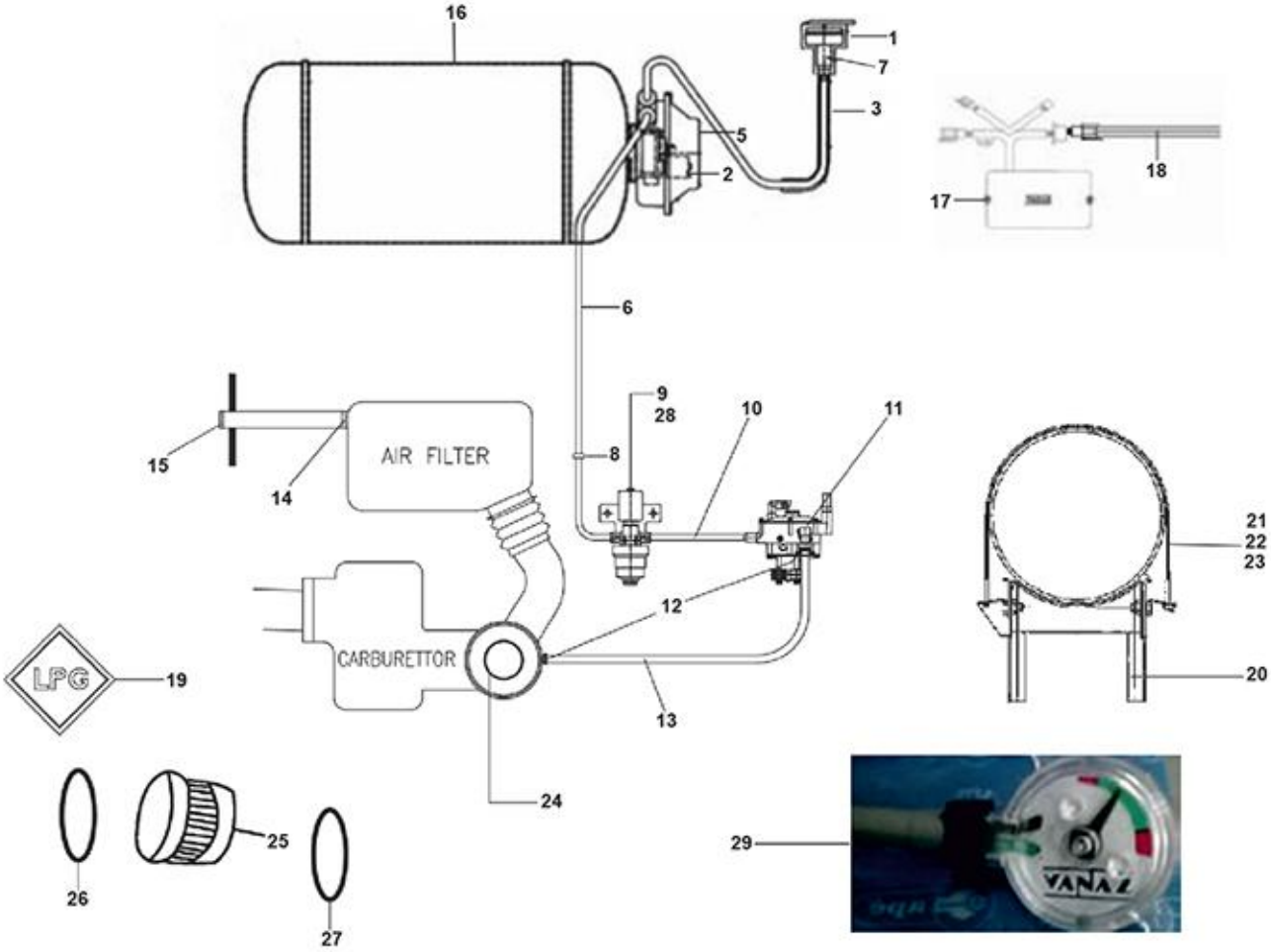
16
1
7
3
5
2
18
17
6
9
28
10
11
15
14
AIR FILTER
8
21
22
23
12
CARBURETTOR
LPG
19
20
13
24
29
25
26
27

101

Print Date: 07-Apr-2022

**PLATE-38**
**LPG Kit**

| Fig. No. | Part No. | Description | Qty | Remarks |
|---|---|---|---|---|
| 1 | 925743 | FILLER CONNECTOR WITH CAP | 1 | |
| 2 | B075426 | MULTIFUNCTION VALVE VANAZ | 1 | |
| 3 | B041491 | VENT HOSE ASSY - 1 | 1 | |
| 3A | B073085 | LPG FLEX. HOSE ASSY. - FOR REFUELING | 1 | |
| 4 | B073084 | SEAL BOX | 6 | |
| 5 | B073084 | SEAL BOX | 1 | |
| 6 | B074851 | LPG FLEXIBLE HOSE ASSY (MFV TO FSV) | 1 | |
| 6 | B077882 | LPG FLEXIBLE HOSE ASSY (MFV TO LPR) | 1 | W/O filter sole. valve Vehicle |
| 7 | 929925 | HOUSING ASSEMBLY FOR FILLER CONNECTOR | 2 | |
| 8 | B024147 | CLIP | 2 | |
| 9 | B075636 | FILTER SOLENOID VALVE (LPG) | 1 | |
| 10 | 932306 | LPG FLEXIBLE HOSE ASSY -FROM FSV TO LPR | 1 | |
| 11 | B076438 | 2 STAGE LPG REGULATOR | 1 | |
| 12 | B042199 | CLIP | 1 | |
| 13 | B042750 | HOSE REGULATOR TO CARBURETTOR | 1 | |
| 14 | B041090 | RESTRACTOR FOR AIR FILTER-SNORKEL LPG | 1 | |
| 15 | 940064 | COIL ASSEMBLY-LPG(K-0440-03-I-170) | 1 | |
| 16 | B073024 | LPG CYLINDER | 1 | |
| 17 | B075861 | ECU | 1 | |
| 18 | B075327 | GAS KIT W/ HS- LPG- ( RH SHIFT) (FOR SNORKEL VEH.) | 1 | |
| 19 | 643882 | STICKER(VANAZ PT NO K-0401-13) | 1 | |
| 20 | B041782 | ASSY CENTRAL BRACKET | 2 | |
| 21 | B075622 | RUBBER STRAP | 2 | |
| 22 | 632184 | RUBBER STRAP UPPER | 2 | |
| 23 | 632185 | LOWER STRAPS ASSY. | 2 | |
| 24 | B076437 | MIXER ASSLY LPG | 1 | |
| 25 | 925737 | FILTER ELEMENT(K-0301-12-050) | 1 | |
| 26 | 929949 | O RING | 1 | |
| 27 | 929948 | O RING | 1 | |
| 28 | 920012 | SOLENOID SWITCH (MFV) | 1 | |
| 29 | B077513 | CONTENT GAUGE LPG (ZERO DEGREE) | 1 | |

**102**

Print Date: 07-Apr-2022

**PLATE-39**

**Two Stage LPG Regulator**

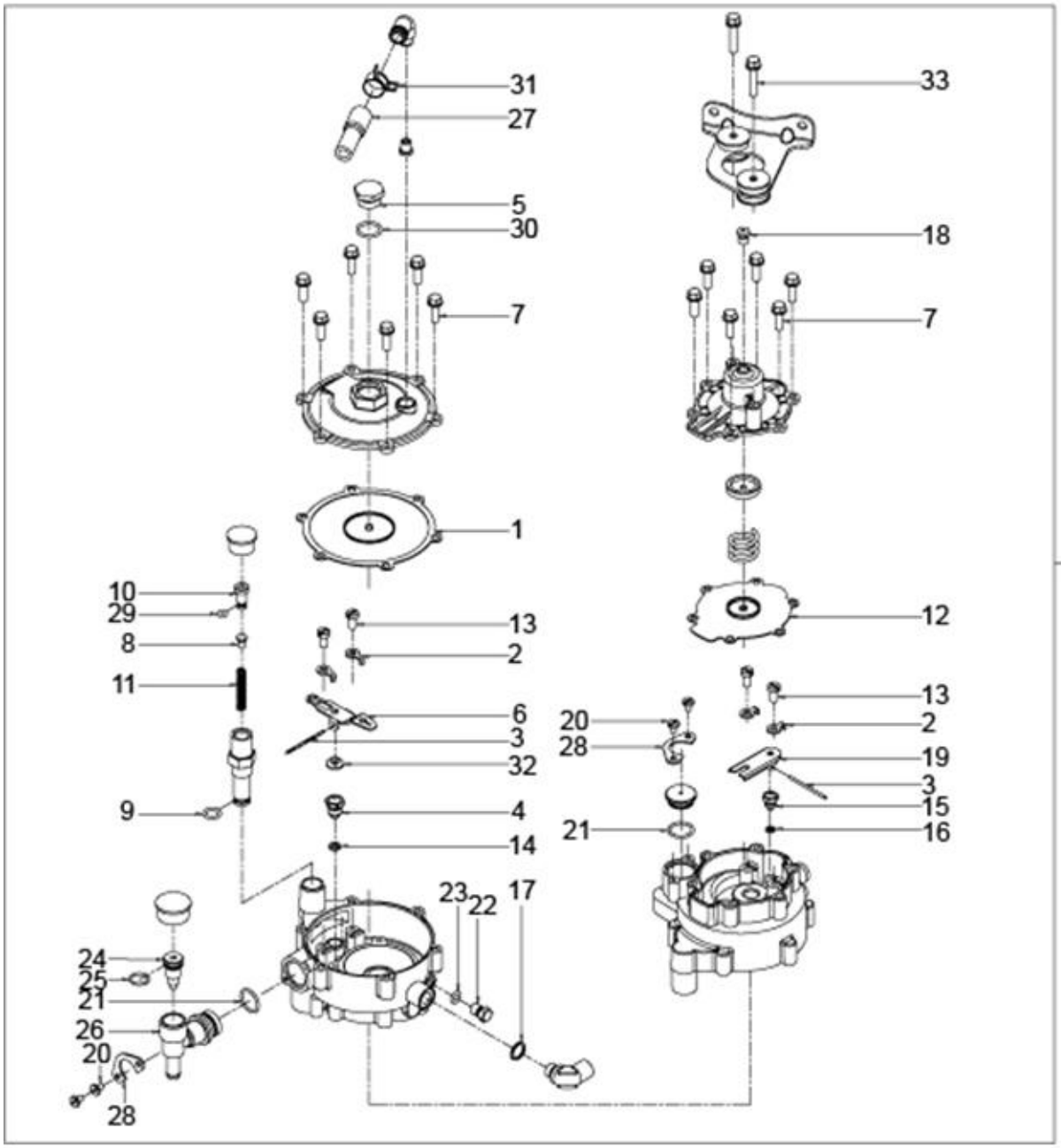
31
27
5
30
7
1
10
29
8
11
9
13
2
6
3
32
4
14
23
22
17
24
25
21
26
20
28
33
18
7
34
12
13
2
20
28
19
3
15
21
16

103

Print Date: 07-Apr-2022

**PLATE-39**

**Two Stage LPG Regulator**

| Fig. No. | Part No. | Description | Qty | Remarks |
|---|---|---|---|---|
| 1 | 932207 | DIAPHRAGM SUB ASSY. | 1 | |
| 2 | 932208 | WASHER | 4 | |
| 3 | 932210 | LEVER PIN | 1 | |
| 4 | 932263 | SEAT | 1 | |
| 5 | 932229 | PLUG | 1 | |
| 6 | 932209 | LEVER SUB ASSY | 1 | |
| 7 | 932232 | FLANGE SCREW | 12 | |
| 8 | 932212 | SPRING GUIDE | 1 | |
| 9 | 925781 | O RING | 1 | |
| 10 | 932226 | IDLE SCREW | 1 | |
| 11 | 932264 | SPRING | 1 | |
| 12 | 932215 | DIAPHRAGM SUB ASSY. | 1 | |
| 13 | 661909 | CHEESE HEAD SCREW | 4 | |
| 14 | 932214 | WASHER | 1 | |
| 15 | 932218 | SEAT | 1 | |
| 16 | 932219 | WASHER | 1 | |
| 17 | 920008 | WASHER | 1 | |
| 18 | 932230 | BREATHER-I | 1 | |
| 19 | 932217 | LEVER SUB ASSY. | 1 | |
| 20 | 932220 | CHEESE HEAD SCREW | 1 | |
| 21 | 932221 | O RING | 1 | |
| 22 | 932222 | PLUG | 1 | |
| 23 | 925783 | O RING | 1 | |
| 24 | 932225 | FLOW ADJUSTING SCREW | 1 | |
| 25 | 932242 | ORING | 1 | |
| 26 | 932224 | FLOW CONTROL BODY | 1 | |
| 27 | 932227 | BREATHER HOSE | 1 | |
| 28 | 932228 | CLAMP | 2 | |
| 29 | 932240 | O RING | 1 | |
| 30 | 932231 | O RING | 1 | |
| 31 | 932270 | CLIP | 1 | |
| 32 | 925768 | PAD | 1 | |
| 33 | 932255 | FLANGE SCREW | 1 | |
| 34 | B077331 | 2 STAGE LPG REGULATOR | 1 | |

**104**

Print Date: 07-Apr-2022

**PLATE-40**

**Tools And Accessories**

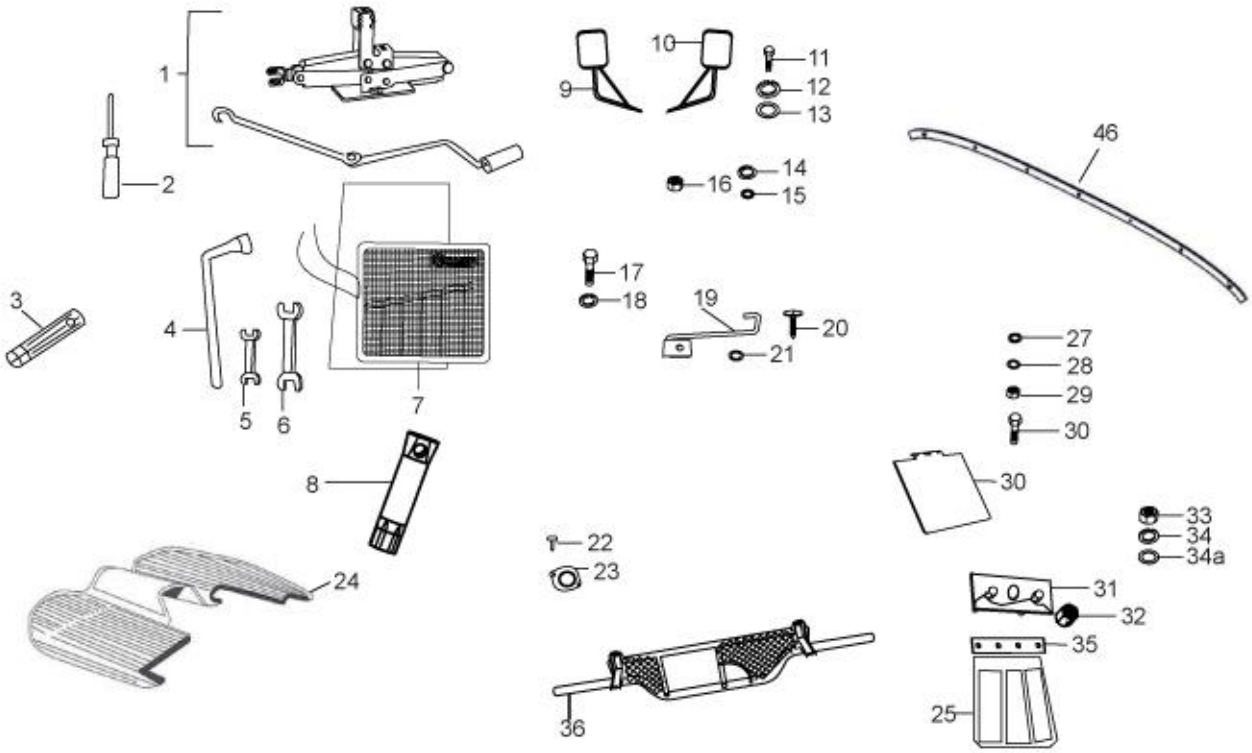
1
2
3
4
5
6
7
8
9
10
11
12
13
14
15
16
17
18
19
20
21
22
23
24
25
27
28
29
30
30
31
32
33
34
34a
35
36
46

105

Print Date: 07-Apr-2022

**PLATE-40**

**Tools And Accessories**

| Fig. No. | Part No. | Description | Qty | Remarks |
|---|---|---|---|---|
| 1 | B076650R | JACK ASSLY | 1 | |
| 2 | 567458 | SCREW DRIVER (-)&(+) 80 | 1 | |
| 3 | B041787 | SPARK PLUG SPANNER | 1 | |
| 4 | B076142 | L TYPE SPANNER - A/F 16 | 1 | |
| 5 | 567454 | DOUBLE END SPANNER7/8 | 1 | |
| 6 | 567456 | DOUBLE END SPANNER 12/14 | 1 | |
| 7 | B041876 | TOOL BAG | 1 | |
| 8 | B041787 | SPARK PLUG SPANNER | 1 | |
| 9 | 643685R | OUTER REAR VIEW MIRROR LH ASSY. | 1 | |
| 9A | B008617 | OUTER REAR VIEW MIRROR LH ASSLY ( EXP) | 1 | STEP-2 BS3 HS LAM PTL |
| 10 | 643684R | OUTER REAR VIEW MIRROR RH ASSY. | 1 | |
| 10A | B008616 | OUTER REAR-VIEW MIRROR RH ASSLY.( EXP ) | 1 | STEP-2 BS3 HS LAM PTL |
| 11 | 31118 | SCREW M8X20 | 2 | |
| 12 | 016408 | SPRING WASHER | 6 | |
| 13 | 3058 | PLAIN WASHER 15X8.4X1.5 | 20 | |
| 14 | 016408 | SPRING WASHER | 4 | |
| 15 | 3058 | PLAIN WASHER 15X8.4X1.5 | 4 | |
| 16 | 20108 | HEX NUT M8 | 4 | |
| 17 | 31116 | HEX HD. SCREW M8X16 | 1 | |
| 18 | 016408 | SPRING WASHER | 1 | |
| 19 | B001887 | STOPPER ASSLY. | 1 | |
| 20 | 15911 | PAN SELF TAP SCREW 8SG X 16 AB | 1 | |
| 21 | 16670 | PLAIN WASHER 12X4.5X1 | 1 | |
| 22 | 8451 | PAN SELF TP SCREW 6 SGX13 AB | 4 | |
| 23 | B003076 | COVER SHOCKER MTG. HOLE | 2 | |
| 24 | B075254 | FARE METERÂ Â  MTG. BKT. | 1 | |
| 25 | B001789 | MUDFLAP MUDGAURD REAR | 2 | |
| 26 | 643661 | LICENSE PLATE MTG. BKT. | 1 | |
| 27 | 13861 | PLAIN WASHER 20X8.2X2.5 | 2 | |
| 28 | 12540 | SPRING WASHER M8 | 2 | |
| 29 | 20108 | HEX NUT M8 | 2 | |
| 30 | 30072 | HEX HEAD BOLT M8 X 35 | 2 | |
| 31 | B002208 | STRAP WITH PIN SPARE WHEEL MTG. | 1 | |
| 32 | 20108 | HEX NUT M8 | 2 | |
| 33 | 20106 | HEX NUT M6 | 12 | |

**106**

Print Date: 07-Apr-2022

**PLATE-40**

**Tools And Accessories**

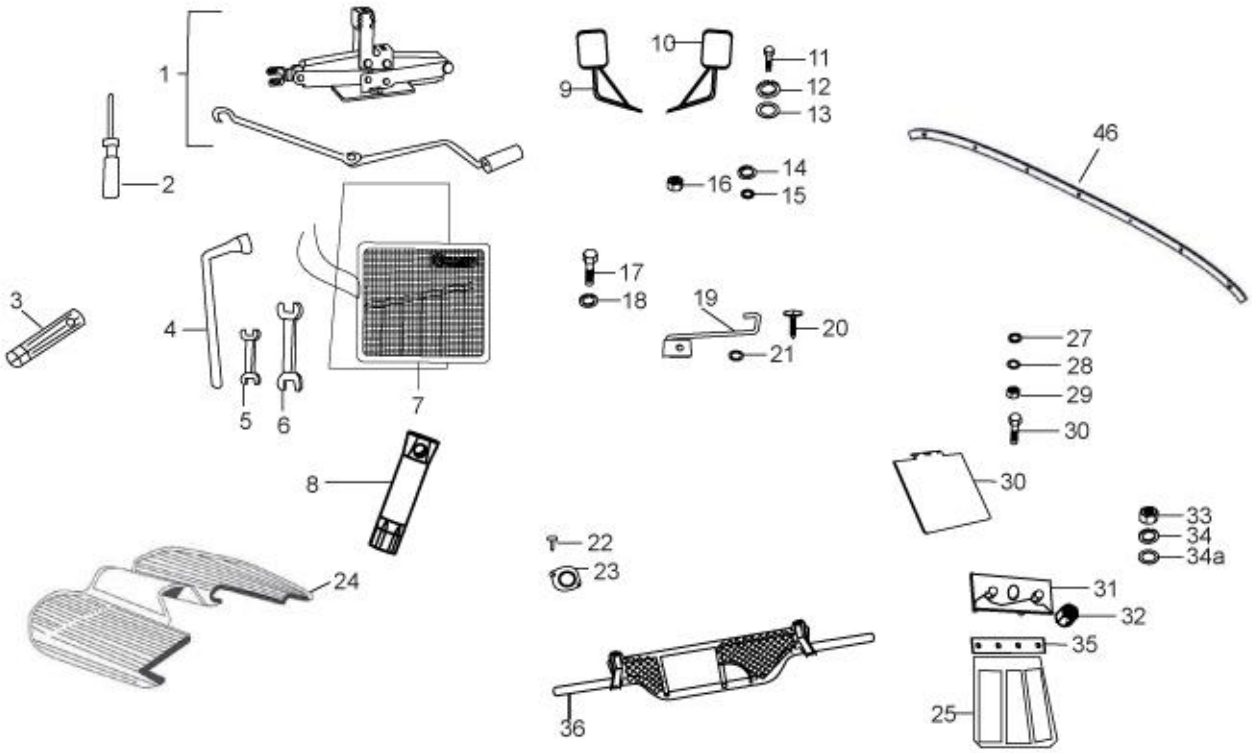
1
2
3
4
5
6
7
8
9
10
11
12
13
14
15
16
17
18
19
20
21
22
23
24
25
27
28
29
30
30
31
32
33
34
34a
35
36
46

107

Print Date: 07-Apr-2022

**PLATE-40**

**Tools And Accessories**

| Fig. No. | Part No. | Description | Qty | Remarks |
|---|---|---|---|---|
| 34 | 016406 | SPRING WASHER | 12 | |
| 34a | 013880 | PLAIN WASHER | 12 | |
| 35 | B001788 | CLAMP MUDFLAP REAR | 2 | |
| 36 | B075102 | VISUAL BARRIER APE CITY CARGO | 1 | |

**108**

Print Date: 07-Apr-2022

# PARTS INDEX

## ape City Xtra Step-II AF BS-IV Exp LAM

**109**

Print Date: 07-Apr-2022

| PART NO | BLOCK | PART NO | BLOCK | PART NO | BLOCK |
|---|---|---|---|---|---|
| ---- | PLATE-12 | 018639 | PLATE-7 | 122032014 | PLATE-17 |
| --- | PLATE-3 | 018639 | PLATE-9 | 125181 | PLATE-26 |
| - | PLATE-11 | 018639 | PLATE-13 | 125289 | PLATE-25 |
| - | PLATE-29 | 107718 | PLATE-25 | 12536 | PLATE-32 |
| - | PLATE-31 | 107826 | PLATE-25 | 12536 | PLATE-33 |
| 000267 | PLATE-12 | 107827 | PLATE-24 | 12540 | PLATE-40 |
| 002139 | PLATE-17 | 107871 | PLATE-25 | 12540 | PLATE-22 |
| 003054 | PLATE-28 | 108785 | PLATE-27 | 125411 | PLATE-27 |
| 005967 | PLATE-30 | 108800 | PLATE-22 | 12546 | PLATE-22 |
| 009101 | PLATE-10 | 108801 | PLATE-22 | 12546 | PLATE-28 |
| 009101 | PLATE-17 | 108804 | PLATE-22 | 126902 | PLATE-26 |
| 013880 | PLATE-40 | 108873 | PLATE-25 | 127012019 | PLATE-2 |
| 013880 | PLATE-9 | 108874 | PLATE-25 | 127013013 | PLATE-2 |
| 013880 | PLATE-19 | 109012 | PLATE-20 | 127016015 | PLATE-9 |
| 013880 | PLATE-27 | 109064 | PLATE-25 | 127111011 | PLATE-6 |
| 013880 | PLATE-29 | 109066 | PLATE-25 | 127185012 | PLATE-2 |
| 016406 | PLATE-40 | 109117 | PLATE-25 | 127451 | PLATE-26 |
| 016406 | PLATE-11 | 109227 | PLATE-21 | 127460010 | PLATE-2 |
| 016406 | PLATE-18 | 109227 | PLATE-26 | 12790 | PLATE-24 |
| 016406 | PLATE-26 | 109227 | PLATE-26 | 127927R | PLATE-27 |
| 016406 | PLATE-27 | 109263 | PLATE-22 | 128633 | PLATE-24 |
| 016406 | PLATE-28 | 109265 | PLATE-25 | 128804ED | PLATE-30 |
| 016406 | PLATE-28 | 109361 | PLATE-30 | 128805ED | PLATE-30 |
| 016406 | PLATE-28 | 109404 | PLATE-26 | 132129 | PLATE-5 |
| 016406 | PLATE-29 | 109635 | PLATE-26 | 132134 | PLATE-5 |
| 016406 | PLATE-6 | 109775 | PLATE-26 | 132244 | PLATE-5 |
| 016406 | PLATE-30 | 109892 | PLATE-24 | 136434 | PLATE-25 |
| 016406 | PLATE-30 | 111353 | PLATE-9 | 136451R | PLATE-24 |
| 016406 | PLATE-31 | 111356 | PLATE-6 | 136916 | PLATE-27 |
| 016408 | PLATE-40 | 111498 | PLATE-6 | 137235 | PLATE-25 |
| 016408 | PLATE-40 | 112867R | PLATE-6 | 13812 | PLATE-22 |
| 016408 | PLATE-40 | 112898 | PLATE-9 | 138237 | PLATE-27 |
| 016408 | PLATE-11 | 113278 | PLATE-6 | 13861 | PLATE-40 |
| 016408 | PLATE-18 | 116971 | PLATE-22 | 13861 | PLATE-21 |
| 016408 | PLATE-18 | 117401 | PLATE-9 | 13861 | PLATE-22 |
| 016408 | PLATE-18 | 117402 | PLATE-9 | 13935 | PLATE-22 |
| 016408 | PLATE-20 | 119735 | PLATE-29 | 140603 | PLATE-22 |
| 016408 | PLATE-21 | 120164019 | PLATE-2 | 141925 | PLATE-26 |
| 016408 | PLATE-21 | 120170018 | PLATE-2 | 150041R | PLATE-30 |
| 016408 | PLATE-24 | 12136 | PLATE-22 | 150579 | PLATE-25 |
| 016408 | PLATE-27 | 12136 | PLATE-28 | 152025 | PLATE-22 |
| 016408 | PLATE-27 | 12138 | PLATE-26 | 15335 | PLATE-18 |
| 016408 | PLATE-30 | 12138 | PLATE-30 | 15478 | PLATE-18 |

| | | |
|---|---|---|
| | | |

**110**

Print Date: 07-Apr-2022

| PART NO | BLOCK | PART NO | BLOCK | PART NO | BLOCK |
|---|---|---|---|---|---|
| 15594 | PLATE-24 | 182662 | PLATE-22 | 1A006988 | PLATE-12 |
| 157103 | PLATE-24 | 182663 | PLATE-22 | 1A007026 | PLATE-9 |
| 157103 | PLATE-24 | 18630 | PLATE-20 | 1A007028 | PLATE-9 |
| 15727 | PLATE-22 | 193724 | PLATE-22 | 1A007029 | PLATE-17 |
| 15727 | PLATE-30 | 197071 | PLATE-34 | 1A007047 | PLATE-4 |
| 157716 | PLATE-29 | 1A000024 | PLATE-13 | 1A007051 | PLATE-6 |
| 15900 | PLATE-29 | 1A000402 | PLATE-16 | 1A007409 | PLATE-7 |
| 15911 | PLATE-40 | 1A000542 | PLATE-7 | 1A007501 | PLATE-6 |
| 15996 | PLATE-28 | 1A000612 | PLATE-9 | 1A007565 | PLATE-14 |
| 16319 | PLATE-26 | 1A000708 | PLATE-9 | 1A007599 | PLATE-10 |
| 163659 | PLATE-22 | 1A000708 | PLATE-2 | 1A007605 | PLATE-6 |
| 163660 | PLATE-22 | 1A000742 | PLATE-16 | 1A007663R | PLATE-9 |
| 163661 | PLATE-22 | 1A000831 | PLATE-13 | 1A007664R | PLATE-9 |
| 163663 | PLATE-22 | 1A001073 | PLATE-12 | 1A007774 | PLATE-9 |
| 163665 | PLATE-22 | 1A001187R | PLATE-16 | 1A008077 | PLATE-2 |
| 163666SP | PLATE-22 | 1A001794 | PLATE-9 | 1A008397 | PLATE-14 |
| 163667SP | PLATE-22 | 1A001795 | PLATE-9 | 1A008547 | PLATE-5 |
| 16405 | PLATE-19 | 1A002358 | PLATE-14 | 1A008547 | PLATE-6 |
| 16405 | PLATE-20 | 1A002661 | PLATE-16 | 1A008559 | PLATE-9 |
| 16405 | PLATE-21 | 1A002685 | PLATE-9 | 1A008672 | PLATE-12 |
| 16405 | PLATE-28 | 1A002691 | PLATE-11 | 1A008715 | PLATE-16 |
| 16405 | PLATE-30 | 1A002691 | PLATE-13 | 1A008804 | PLATE-34 |
| 16410 | PLATE-18 | 1A003060 | PLATE-10 | 1A008804 | PLATE-6 |
| 16410 | PLATE-18 | 1A005176 | PLATE-6 | 1A008823 | PLATE-9 |
| 16410 | PLATE-24 | 1A005178 | PLATE-10 | 1A009093 | PLATE-6 |
| 16410 | PLATE-24 | 1A006002 | PLATE-12 | 1A009125 | PLATE-11 |
| 16410 | PLATE-25 | 1A006115 | PLATE-17 | 1A009251 | PLATE-28 |
| 16410 | PLATE-25 | 1A006545 | PLATE-11 | 1A009352 | PLATE-28 |
| 16410 | PLATE-26 | 1A006687 | PLATE-17 | 1A009353 | PLATE-28 |
| 16410 | PLATE-6 | 1A006701 | PLATE-10 | 1A009586 | PLATE-16 |
| 165121014 | PLATE-9 | 1A006740 | PLATE-13 | 1A009587 | PLATE-16 |
| 16603 | PLATE-21 | 1A006742 | PLATE-13 | 1A009588 | PLATE-16 |
| 16603 | PLATE-30 | 1A006743 | PLATE-13 | 1A009589 | PLATE-16 |
| 16620 | PLATE-26 | 1A006751 | PLATE-16 | 1A009590 | PLATE-16 |
| 16626 | PLATE-26 | 1A006806 | PLATE-6 | 1A009591 | PLATE-16 |
| 16670 | PLATE-40 | 1A006812 | PLATE-4 | 1A009592 | PLATE-16 |
| 16670 | PLATE-20 | 1A006856 | PLATE-9 | 1A009593 | PLATE-16 |
| 178610 | PLATE-18 | 1A006858 | PLATE-16 | 1A009621R | PLATE-15 |
| 180431 | PLATE-25 | 1A006859 | PLATE-10 | 1A009632 | PLATE-7 |
| 181746 | PLATE-28 | 1A006877 | PLATE-4 | 1A009706 | PLATE-11 |
| 181747 | PLATE-28 | 1A006899 | PLATE-14 | 1A009762 | PLATE-4 |
| 182660R | PLATE-22 | 1A006901 | PLATE-14 | 1A009779 | PLATE-6 |
| 182661R | PLATE-22 | 1A006970 | PLATE-17 | 1A010001 | PLATE-13 |

| | | |
|---|---|---|
| | | |

111

Print Date: 07-Apr-2022

| PART NO | BLOCK | PART NO | BLOCK | PART NO | BLOCK |
|---|---|---|---|---|---|
| 1A010008 | PLATE-10 | 1A012011 | PLATE-10 | 20106 | PLATE-27 |
| 1A010023 | PLATE-7 | 1A012039 | PLATE-10 | 20106 | PLATE-28 |
| 1A010024 | PLATE-7 | 1A012150 | PLATE-3 | 20106 | PLATE-28 |
| 1A010025 | PLATE-7 | 1A012151 | PLATE-3 | 20106 | PLATE-29 |
| 1A010026 | PLATE-7 | 1A012152 | PLATE-3 | 20106 | PLATE-29 |
| 1A010035 | PLATE-10 | 1A012153 | PLATE-3 | 20106 | PLATE-29 |
| 1A010088 | PLATE-7 | 1A012154 | PLATE-3 | 20106 | PLATE-30 |
| 1A010089 | PLATE-7 | 1A012155 | PLATE-3 | 20106 | PLATE-30 |
| 1A010090 | PLATE-7 | 1A012156 | PLATE-3 | 20108 | PLATE-40 |
| 1A010091 | PLATE-7 | 1A012157 | PLATE-3 | 20108 | PLATE-40 |
| 1A010092 | PLATE-7 | 1A012158 | PLATE-3 | 20108 | PLATE-40 |
| 1A010095 | PLATE-7 | 1A012159 | PLATE-3 | 20108 | PLATE-18 |
| 1A010096 | PLATE-7 | 1A012160 | PLATE-3 | 20108 | PLATE-18 |
| 1A010097 | PLATE-7 | 1A012161 | PLATE-3 | 20108 | PLATE-18 |
| 1A010098 | PLATE-7 | 1A012182 | PLATE-10 | 20108 | PLATE-21 |
| 1A010100 | PLATE-7 | 1A012334 | PLATE-10 | 20108 | PLATE-21 |
| 1A010101 | PLATE-7 | 1A012846 | PLATE-17 | 20108 | PLATE-21 |
| 1A010102 | PLATE-7 | 1A013013 | PLATE-14 | 20108 | PLATE-22 |
| 1A010119 | PLATE-3 | 1A013159 | PLATE-12 | 20108 | PLATE-22 |
| 1A010136 | PLATE-2 | 1A014399 | PLATE-16 | 20108 | PLATE-27 |
| 1A010150 | PLATE-12 | 1A015692 | PLATE-14 | 20108 | PLATE-27 |
| 1A010159 | PLATE-17 | 1A015723R | PLATE-11 | 20108 | PLATE-30 |
| 1A010160 | PLATE-17 | 1A016737 | PLATE-4 | 20110 | PLATE-18 |
| 1A010161 | PLATE-17 | 1A016964 | PLATE-6 | 20110 | PLATE-24 |
| 1A010162 | PLATE-17 | 1A018212 | PLATE-16 | 20110 | PLATE-24 |
| 1A010166 | PLATE-17 | 1A020456 | PLATE-16 | 20110 | PLATE-25 |
| 1A010187 | PLATE-10 | 1A021204 | PLATE-16 | 20110 | PLATE-25 |
| 1A010208 | PLATE-3 | 1D000425R | PLATE-16 | 20110 | PLATE-26 |
| 1A010461 | PLATE-3 | 1D000510 | PLATE-28 | 20359 | PLATE-24 |
| 1A010548 | PLATE-2 | 1D000671R | PLATE-28 | 21118 | PLATE-24 |
| 1A010561 | PLATE-3 | 1D001138 | PLATE-9 | 21216 | PLATE-27 |
| 1A010632 | PLATE-5 | 1D001846 | PLATE-16 | 217280 | PLATE-19 |
| 1A010632 | PLATE-6 | 1D001847 | PLATE-12 | 220575 | PLATE-5 |
| 1A010696R | PLATE-16 | 1D001894 | PLATE-31 | 226596 | PLATE-24 |
| 1A010720 | PLATE-9 | 1E002770 | PLATE-26 | 226661 | PLATE-24 |
| 1A010781 | PLATE-8 | 20104 | PLATE-20 | 226662 | PLATE-24 |
| 1A011044 | PLATE-17 | 20105 | PLATE-20 | 229524 | PLATE-27 |
| 1A011246 | PLATE-9 | 20105 | PLATE-28 | 231370 | PLATE-18 |
| 1A011246 | PLATE-9 | 20105 | PLATE-28 | 231370 | PLATE-18 |
| 1A011289 | PLATE-17 | 20105 | PLATE-28 | 231370 | PLATE-24 |
| 1A011500 | PLATE-9 | 20105 | PLATE-30 | 231370 | PLATE-24 |
| 1A011914 | PLATE-7 | 20106 | PLATE-34 | 231370 | PLATE-24 |
| 1A011940 | PLATE-2 | 20106 | PLATE-40 | 231370 | PLATE-6 |

| | | |
|---|---|---|
| | | |

112

Print Date: 07-Apr-2022

| PART NO | BLOCK | PART NO | BLOCK | PART NO | BLOCK |
|---|---|---|---|---|---|
| 237246 | PLATE-24 | 3058 | PLATE-40 | 483711 | PLATE-11 |
| 2383 | PLATE-18 | 3058 | PLATE-21 | 485655 | PLATE-9 |
| 2383 | PLATE-18 | 3058 | PLATE-21 | 485703 | PLATE-9 |
| 243303R | PLATE-24 | 3058 | PLATE-21 | 485703 | PLATE-11 |
| 265091 | PLATE-18 | 3058 | PLATE-27 | 485868 | PLATE-14 |
| 267065 | PLATE-18 | 3058 | PLATE-30 | 566545 | PLATE-25 |
| 267065 | PLATE-24 | 3068 | PLATE-19 | 567454 | PLATE-40 |
| 267068 | PLATE-24 | 3068 | PLATE-24 | 567456 | PLATE-40 |
| 269755 | PLATE-9 | 31056 | PLATE-19 | 567458 | PLATE-40 |
| 269755 | PLATE-11 | 31057 | PLATE-28 | 567461 | PLATE-27 |
| 272178 | PLATE-18 | 31058 | PLATE-22 | 567473 | PLATE-25 |
| 285536 | PLATE-4 | 31058 | PLATE-28 | 567498R | PLATE-28 |
| 286328 | PLATE-18 | 31058 | PLATE-28 | 567498R | PLATE-28 |
| 286328 | PLATE-18 | 31058 | PLATE-30 | 567562 | PLATE-21 |
| 286328 | PLATE-18 | 31088 | PLATE-19 | 567581 | PLATE-28 |
| 286328 | PLATE-24 | 31088 | PLATE-19 | 567593 | PLATE-29 |
| 288730 | PLATE-5 | 31088 | PLATE-28 | 567690 | PLATE-27 |
| 30072 | PLATE-40 | 31088 | PLATE-28 | 567706 | PLATE-28 |
| 30074 | PLATE-11 | 31088 | PLATE-28 | 567732 | PLATE-30 |
| 30074 | PLATE-30 | 31088 | PLATE-31 | 567746G1 | PLATE-27 |
| 30074 | PLATE-30 | 31089 | PLATE-11 | 567878R | PLATE-19 |
| 30104 | PLATE-26 | 31089 | PLATE-26 | 567898 | PLATE-27 |
| 30104 | PLATE-26 | 31089 | PLATE-29 | 567899 | PLATE-27 |
| 30209R | PLATE-25 | 31089 | PLATE-30 | 567920 | PLATE-27 |
| 30242 | PLATE-20 | 31092 | PLATE-6 | 567920 | PLATE-27 |
| 30242 | PLATE-22 | 31116 | PLATE-40 | 567990 | PLATE-25 |
| 3055 | PLATE-20 | 31118 | PLATE-40 | 567991 | PLATE-25 |
| 3055 | PLATE-26 | 31118 | PLATE-21 | 567992 | PLATE-25 |
| 3055 | PLATE-27 | 31119 | PLATE-18 | 567993 | PLATE-25 |
| 3055 | PLATE-28 | 31119 | PLATE-18 | 568095 | PLATE-25 |
| 3055 | PLATE-28 | 31119 | PLATE-21 | 568131 | PLATE-21 |
| 3055 | PLATE-28 | 31119 | PLATE-30 | 568140 | PLATE-18 |
| 3055 | PLATE-29 | 31154 | PLATE-18 | 568161 | PLATE-27 |
| 3055 | PLATE-30 | 432142 | PLATE-9 | 568288 | PLATE-21 |
| 3056 | PLATE-11 | 433122 | PLATE-11 | 568671 | PLATE-23 |
| 3056 | PLATE-28 | 434541 | PLATE-14 | 568682 | PLATE-21 |
| 3056 | PLATE-28 | 434541 | PLATE-15 | 568689 | PLATE-18 |
| 3056 | PLATE-29 | 434716 | PLATE-11 | 568692 | PLATE-20 |
| 3056 | PLATE-6 | 435571 | PLATE-15 | 568692 | PLATE-28 |
| 3056 | PLATE-29 | 436947 | PLATE-11 | 568713 | PLATE-20 |
| 3056 | PLATE-31 | 478261 | PLATE-2 | 568721 | PLATE-28 |
| 3057 | PLATE-30 | 48197 | PLATE-27 | 568737 | PLATE-27 |
| 3058 | PLATE-40 | 482335 | PLATE-15 | 569156 | PLATE-22 |

| | | |
|---|---|---|
| | | |

**113**

Print Date: 07-Apr-2022

| PART NO | BLOCK | PART NO | BLOCK | PART NO | BLOCK |
|---|---|---|---|---|---|
| 569157 | PLATE-22 | 6078 | PLATE-28 | 645124 | PLATE-34 |
| 569165 | PLATE-28 | 616649 | PLATE-21 | 645141 | PLATE-21 |
| 569244 | PLATE-18 | 616738R | PLATE-19 | 652001 | PLATE-27 |
| 569375 | PLATE-18 | 6173 | PLATE-27 | 652105 | PLATE-19 |
| 569504 | PLATE-19 | 632056 | PLATE-27 | 652105 | PLATE-19 |
| 5745 | PLATE-22 | 632109 | PLATE-19 | 652253R | PLATE-21 |
| 587617 | PLATE-24 | 632158 | PLATE-26 | 660109 | PLATE-28 |
| 587624R | PLATE-27 | 632184 | PLATE-38 | 660168 | PLATE-21 |
| 587671R | PLATE-28 | 632185 | PLATE-35 | 660168 | PLATE-23 |
| 587829 | PLATE-27 | 632185 | PLATE-38 | 660168 | PLATE-29 |
| 587902 | PLATE-26 | 632238 | PLATE-22 | 661262 | PLATE-30 |
| 587905PC | PLATE-21 | 632247 | PLATE-18 | 661266 | PLATE-24 |
| 587928 | PLATE-27 | 632292 | PLATE-28 | 661267 | PLATE-24 |
| 587963 | PLATE-20 | 632299 | PLATE-18 | 661282 | PLATE-24 |
| 5969 | PLATE-27 | 632299 | PLATE-18 | 661399 | PLATE-37 |
| 6018 | PLATE-22 | 632508 | PLATE-21 | 661909 | PLATE-39 |
| 604535 | PLATE-24 | 632604 | PLATE-21 | 662323 | PLATE-30 |
| 604553 | PLATE-8 | 63440 | PLATE-32 | 6650 | PLATE-24 |
| 604557 | PLATE-28 | 6410 | PLATE-6 | 6733 | PLATE-25 |
| 604558 | PLATE-22 | 6411 | PLATE-27 | 680166 | PLATE-28 |
| 604606 | PLATE-21 | 642537 | PLATE-9 | 6965 | PLATE-22 |
| 604717 | PLATE-27 | 64263 | PLATE-22 | 6965 | PLATE-28 |
| 604751 | PLATE-21 | 643149 | PLATE-9 | 6965 | PLATE-28 |
| 604756 | PLATE-8 | 643156 | PLATE-9 | 6A000068 | PLATE-34 |
| 604756 | PLATE-19 | 643367 | PLATE-11 | 6A000069 | PLATE-34 |
| 604758 | PLATE-25 | 643500 | PLATE-30 | 6A000070 | PLATE-34 |
| 604758 | PLATE-25 | 643661 | PLATE-40 | 6A001657 | PLATE-19 |
| 604759 | PLATE-25 | 643661 | PLATE-30 | 6A001834 | PLATE-34 |
| 604760 | PLATE-27 | 643684R | PLATE-40 | 6B000361BW | PLATE-21 |
| 604761 | PLATE-21 | 643685R | PLATE-40 | 6B000361CB | PLATE-21 |
| 604863 | PLATE-35 | 643691 | PLATE-23 | 6B000361EG | PLATE-21 |
| 604877 | PLATE-27 | 643692 | PLATE-27 | 6B000361GY | PLATE-21 |
| 604908 | PLATE-19 | 643704R | PLATE-28 | 6B000377 | PLATE-21 |
| 604909 | PLATE-19 | 643705R | PLATE-28 | 6B000378 | PLATE-21 |
| 604948 | PLATE-18 | 643741 | PLATE-24 | 6B000404BW | PLATE-21 |
| 604954 | PLATE-21 | 643772R | PLATE-25 | 6B000404CB | PLATE-21 |
| 605389 | PLATE-22 | 643850 | PLATE-35 | 6B000404CO | PLATE-21 |
| 60565 | PLATE-26 | 643882 | PLATE-38 | 6B000404EG | PLATE-21 |
| 6066 | PLATE-24 | 643964 | PLATE-35 | 6B000404GY | PLATE-21 |
| 6066 | PLATE-25 | 644814R | PLATE-27 | 6B000406BW | PLATE-21 |
| 6078 | PLATE-22 | 644824 | PLATE-19 | 6B000406CB | PLATE-21 |
| 6078 | PLATE-23 | 644838R | PLATE-31 | 6B000406ECO | PLATE-21 |
| 6078 | PLATE-28 | 644852 | PLATE-21 | 6B000406EG | PLATE-21 |

| | | |
|---|---|---|
| | | |

114

Print Date: 07-Apr-2022

| PART NO | BLOCK | PART NO | BLOCK | PART NO | BLOCK |
|---|---|---|---|---|---|
| 6B000406EGY | PLATE-21 | 87067 | PLATE-25 | 932212 | PLATE-36 |
| 6C000016 | PLATE-6 | 872816 | PLATE-9 | 932212 | PLATE-39 |
| 6C000041 | PLATE-6 | 8771 | PLATE-25 | 932213 | PLATE-36 |
| 6C000190 | PLATE-25 | 878941 | PLATE-9 | 932214 | PLATE-36 |
| 6C000191 | PLATE-25 | 8808 | PLATE-22 | 932214 | PLATE-39 |
| 6C000312R | PLATE-6 | 884222808 | PLATE-9 | 932215 | PLATE-36 |
| 6C000430 | PLATE-24 | 8847 | PLATE-22 | 932215 | PLATE-39 |
| 6C000430 | PLATE-25 | 920008 | PLATE-39 | 932216 | PLATE-36 |
| 6C000530 | PLATE-24 | 920012 | PLATE-38 | 932217 | PLATE-36 |
| 6D000143R | PLATE-29 | 920083 | PLATE-28 | 932217 | PLATE-39 |
| 6D000144R | PLATE-29 | 920084 | PLATE-28 | 932218 | PLATE-36 |
| 6D000145R | PLATE-29 | 920088 | PLATE-8 | 932218 | PLATE-39 |
| 6D000146R | PLATE-29 | 925574 | PLATE-33 | 932219 | PLATE-36 |
| 6D000408 | PLATE-35 | 925581 | PLATE-28 | 932219 | PLATE-39 |
| 6D001087 | PLATE-19 | 925581 | PLATE-29 | 932220 | PLATE-36 |
| 7066R | PLATE-9 | 925603 | PLATE-28 | 932220 | PLATE-39 |
| 71633 | PLATE-30 | 925737 | PLATE-38 | 932221 | PLATE-36 |
| 74521 | PLATE-25 | 925743 | PLATE-38 | 932221 | PLATE-39 |
| 75708 | PLATE-25 | 925768 | PLATE-36 | 932222 | PLATE-36 |
| 78307 | PLATE-29 | 925768 | PLATE-39 | 932222 | PLATE-39 |
| 808000826 | PLATE-20 | 925781 | PLATE-36 | 932224 | PLATE-36 |
| 8080 | PLATE-23 | 925781 | PLATE-39 | 932224 | PLATE-39 |
| 8080 | PLATE-29 | 925783 | PLATE-39 | 932225 | PLATE-36 |
| 812061656 | PLATE-24 | 925786 | PLATE-28 | 932225 | PLATE-39 |
| 812061656 | PLATE-25 | 929925 | PLATE-38 | 932226 | PLATE-36 |
| 812061656 | PLATE-27 | 929931 | PLATE-37 | 932226 | PLATE-39 |
| 82635R | PLATE-4 | 929933 | PLATE-37 | 932227 | PLATE-36 |
| 8265 | PLATE-30 | 929934 | PLATE-37 | 932227 | PLATE-39 |
| 829661 | PLATE-9 | 929935 | PLATE-37 | 932228 | PLATE-36 |
| 83040R | PLATE-14 | 929936 | PLATE-37 | 932228 | PLATE-39 |
| 83041R | PLATE-14 | 929938 | PLATE-37 | 932229 | PLATE-36 |
| 83054R | PLATE-11 | 929939 | PLATE-37 | 932229 | PLATE-39 |
| 842001600 | PLATE-2 | 929940 | PLATE-37 | 932230 | PLATE-36 |
| 842001600 | PLATE-2 | 929948 | PLATE-38 | 932230 | PLATE-39 |
| 843000500 | PLATE-6 | 929949 | PLATE-38 | 932231 | PLATE-36 |
| 843000809 | PLATE-2 | 932207 | PLATE-36 | 932231 | PLATE-39 |
| 843307 | PLATE-11 | 932207 | PLATE-39 | 932232 | PLATE-36 |
| 8451 | PLATE-40 | 932208 | PLATE-36 | 932232 | PLATE-39 |
| 8451 | PLATE-22 | 932208 | PLATE-39 | 932233 | PLATE-37 |
| 8451 | PLATE-28 | 932209 | PLATE-39 | 932235 | PLATE-37 |
| 847928 | PLATE-14 | 932210 | PLATE-36 | 932236 | PLATE-37 |
| 847928 | PLATE-15 | 932210 | PLATE-39 | 932237 | PLATE-37 |
| 861990 | PLATE-35 | 932211 | PLATE-36 | 932238 | PLATE-37 |

| | | |
|---|---|---|
| | | |

**115**

Print Date: 07-Apr-2022

| PART NO | BLOCK | PART NO | BLOCK | PART NO | BLOCK |
|---|---|---|---|---|---|
| 932239 | PLATE-37 | B001317 | PLATE-24 | B006509 | PLATE-32 |
| 932240 | PLATE-36 | B001319 | PLATE-24 | B006544 | PLATE-21 |
| 932240 | PLATE-37 | B001323 | PLATE-25 | B006853 | PLATE-26 |
| 932240 | PLATE-39 | B001386 | PLATE-20 | B008616 | PLATE-40 |
| 932241 | PLATE-37 | B001788 | PLATE-40 | B008617 | PLATE-40 |
| 932242 | PLATE-36 | B001789 | PLATE-40 | B008637 | PLATE-21 |
| 932242 | PLATE-37 | B001887 | PLATE-40 | B008638 | PLATE-21 |
| 932242 | PLATE-39 | B002208 | PLATE-40 | B009159 | PLATE-35 |
| 932243 | PLATE-37 | B002486 | PLATE-24 | B014063 | PLATE-9 |
| 932254 | PLATE-36 | B002486 | PLATE-33 | B014066 | PLATE-9 |
| 932255 | PLATE-36 | B002539 | PLATE-21 | B014555 | PLATE-15 |
| 932255 | PLATE-39 | B002630 | PLATE-19 | B014684 | PLATE-11 |
| 932263 | PLATE-39 | B002847 | PLATE-22 | B014705 | PLATE-11 |
| 932264 | PLATE-39 | B002848 | PLATE-22 | B014706 | PLATE-11 |
| 932265 | PLATE-36 | B003002 | PLATE-32 | B014732 | PLATE-11 |
| 932270 | PLATE-39 | B003002 | PLATE-33 | B014755 | PLATE-9 |
| 932273 | PLATE-35 | B003003 | PLATE-32 | B014760 | PLATE-14 |
| 932274 | PLATE-35 | B003003 | PLATE-33 | B015288 | PLATE-11 |
| 932275 | PLATE-35 | B003004 | PLATE-32 | B015483 | PLATE-14 |
| 932276 | PLATE-35 | B003004 | PLATE-33 | B015543 | PLATE-7 |
| 932306 | PLATE-38 | B003008 | PLATE-32 | B015592 | PLATE-9 |
| 932646 | PLATE-35 | B003011 | PLATE-33 | B015598 | PLATE-4 |
| 940028 | PLATE-5 | B003012 | PLATE-33 | B015943 | PLATE-4 |
| 940028 | PLATE-5 | B003014 | PLATE-33 | B016016 | PLATE-7 |
| 940028 | PLATE-5 | B003017 | PLATE-32 | B016120 | PLATE-16 |
| 940064 | PLATE-38 | B003076 | PLATE-40 | B016144 | PLATE-12 |
| 940065 | PLATE-25 | B003110R | PLATE-31 | B016148 | PLATE-16 |
| 940066 | PLATE-25 | B003115 | PLATE-19 | B016192 | PLATE-13 |
| 940069 | PLATE-8 | B003115 | PLATE-19 | B016368 | PLATE-11 |
| 940071 | PLATE-8 | B003228 | PLATE-27 | B016552 | PLATE-9 |
| 940072 | PLATE-8 | B003286 | PLATE-18 | B016620 | PLATE-13 |
| 963486 | PLATE-15 | B003300 | PLATE-32 | B016774 | PLATE-7 |
| 97756 | PLATE-22 | B003300 | PLATE-33 | B016774 | PLATE-14 |
| 97756 | PLATE-22 | B003324 | PLATE-32 | B016774 | PLATE-16 |
| B001225 | PLATE-33 | B003325 | PLATE-32 | B016774 | PLATE-5 |
| B001228 | PLATE-33 | B003327 | PLATE-33 | B016822 | PLATE-7 |
| B001301 | PLATE-25 | B003328 | PLATE-33 | B016823 | PLATE-7 |
| B001302 | PLATE-25 | B003330 | PLATE-33 | B016824 | PLATE-7 |
| B001315 | PLATE-22 | B003331 | PLATE-33 | B016825 | PLATE-7 |
| B001315 | PLATE-25 | B003864 | PLATE-22 | B016827 | PLATE-7 |
| B001316 | PLATE-22 | B003865 | PLATE-22 | B016828 | PLATE-7 |
| B001316 | PLATE-24 | B003929 | PLATE-19 | B016829 | PLATE-7 |
| B001316 | PLATE-25 | B003978 | PLATE-21 | B016834 | PLATE-7 |

| | | |
|---|---|---|
| | | |

**116**

Print Date: 07-Apr-2022

| PART NO | BLOCK | PART NO | BLOCK | PART NO | BLOCK |
|---|---|---|---|---|---|
| B016869 | PLATE-7 | B024373 | PLATE-24 | B042878 | PLATE-22 |
| B016939 | PLATE-15 | B024374 | PLATE-24 | B042976 | PLATE-27 |
| B017113 | PLATE-14 | B024501 | PLATE-30 | B042977 | PLATE-27 |
| B017165 | PLATE-14 | B024532 | PLATE-28 | B073024 | PLATE-38 |
| B017165 | PLATE-15 | B024601R | PLATE-35 | B073084 | PLATE-38 |
| B017189 | PLATE-16 | B024614 | PLATE-6 | B073084 | PLATE-38 |
| B017230 | PLATE-11 | B024641 | PLATE-28 | B073085 | PLATE-38 |
| B017323 | PLATE-14 | B024733 | PLATE-22 | B073320R | PLATE-31 |
| B017336 | PLATE-11 | B024734 | PLATE-22 | B073441 | PLATE-8 |
| B017431 | PLATE-14 | B024892 | PLATE-19 | B073469 | PLATE-34 |
| B017438 | PLATE-11 | B024937 | PLATE-8 | B073478R | PLATE-23 |
| B017456 | PLATE-11 | B024948R | PLATE-28 | B073479R | PLATE-23 |
| B017542 | PLATE-7 | B041089 | PLATE-8 | B073481R | PLATE-23 |
| B017746 | PLATE-14 | B041090 | PLATE-38 | B073492 | PLATE-28 |
| B018262 | PLATE-13 | B041090 | PLATE-8 | B073523ED | PLATE-30 |
| B018442 | PLATE-7 | B041160 | PLATE-27 | B073526ED | PLATE-30 |
| B018533 | PLATE-11 | B041161 | PLATE-27 | B073531BW | PLATE-30 |
| B018718 | PLATE-14 | B041181 | PLATE-25 | B073531CB | PLATE-30 |
| B018853 | PLATE-2 | B041445 | PLATE-8 | B073531CO | PLATE-30 |
| B018853 | PLATE-16 | B041491 | PLATE-38 | B073531EG | PLATE-30 |
| B018854 | PLATE-15 | B041600 | PLATE-26 | B073531GY | PLATE-30 |
| B018946 | PLATE-14 | B041774 | PLATE-34 | B073531SY | PLATE-30 |
| B019047 | PLATE-13 | B041774 | PLATE-27 | B073600 | PLATE-28 |
| B019220 | PLATE-2 | B041782 | PLATE-38 | B073667SP | PLATE-25 |
| B019420 | PLATE-16 | B041784 | PLATE-35 | B073682 | PLATE-28 |
| B019420 | PLATE-3 | B041784 | PLATE-37 | B073685 | PLATE-28 |
| B023727R | PLATE-28 | B041787 | PLATE-40 | B073690 | PLATE-25 |
| B023727R | PLATE-28 | B041787 | PLATE-40 | B073715 | PLATE-28 |
| B023727R | PLATE-28 | B041876 | PLATE-40 | B073810 | PLATE-23 |
| B023786R | PLATE-27 | B042199 | PLATE-38 | B073811 | PLATE-23 |
| B023940 | PLATE-6 | B042317 | PLATE-27 | B073812 | PLATE-23 |
| B023968 | PLATE-31 | B042356 | PLATE-34 | B073814 | PLATE-23 |
| B023976 | PLATE-23 | B042390 | PLATE-19 | B073821 | PLATE-28 |
| B024056 | PLATE-28 | B042396 | PLATE-27 | B073829 | PLATE-19 |
| B024113 | PLATE-25 | B042438 | PLATE-25 | B073835 | PLATE-19 |
| B024113 | PLATE-32 | B042486 | PLATE-9 | B073837 | PLATE-19 |
| B024131 | PLATE-35 | B042599 | PLATE-27 | B073850R | PLATE-26 |
| B024131 | PLATE-37 | B042612 | PLATE-21 | B073872 | PLATE-29 |
| B024147 | PLATE-35 | B042693 | PLATE-27 | B073875 | PLATE-29 |
| B024147 | PLATE-38 | B042750 | PLATE-38 | B073875SL | PLATE-29 |
| B024168 | PLATE-19 | B042794 | PLATE-27 | B073882BL | PLATE-29 |
| B024169 | PLATE-23 | B042814 | PLATE-22 | B073882BW | PLATE-29 |
| B024194 | PLATE-35 | B042816 | PLATE-21 | B073882CB | PLATE-29 |

| | | |
|---|---|---|
| | | |

117

Print Date: 07-Apr-2022

| PART NO | BLOCK | PART NO | BLOCK | PART NO | BLOCK |
|---|---|---|---|---|---|
| B073882EG | PLATE-29 | B075565 | PLATE-34 | B076295 | PLATE-18 |
| B073882GY | PLATE-29 | B075566 | PLATE-34 | B076304 | PLATE-28 |
| B073882NB | PLATE-29 | B075593 | PLATE-18 | B076364 | PLATE-34 |
| B073882WR | PLATE-29 | B075595 | PLATE-18 | B076364 | PLATE-34 |
| B073953 | PLATE-29 | B075621 | PLATE-35 | B076435 | PLATE-35 |
| B073969 | PLATE-29 | B075622 | PLATE-38 | B076437 | PLATE-38 |
| B073970 | PLATE-29 | B075636 | PLATE-38 | B076438 | PLATE-38 |
| B073979 | PLATE-31 | B075638 | PLATE-35 | B076650R | PLATE-40 |
| B074033 | PLATE-29 | B075687ED | PLATE-26 | B076749 | PLATE-19 |
| B074040 | PLATE-26 | B075693 | PLATE-28 | B076750 | PLATE-19 |
| B074173 | PLATE-22 | B075694 | PLATE-25 | B076752 | PLATE-19 |
| B074214 | PLATE-31 | B075703 | PLATE-23 | B076753 | PLATE-19 |
| B074216 | PLATE-23 | B075716 | PLATE-34 | B076753 | PLATE-19 |
| B074262 | PLATE-23 | B075732 | PLATE-23 | B077245 | PLATE-24 |
| B074275 | PLATE-23 | B075790 | PLATE-19 | B077245 | PLATE-25 |
| B074433 | PLATE-29 | B075798 | PLATE-18 | B077249 | PLATE-31 |
| B074434 | PLATE-29 | B075807 | PLATE-24 | B077249 | PLATE-31 |
| B074491 | PLATE-28 | B075808 | PLATE-24 | B077250 | PLATE-31 |
| B074498 | PLATE-26 | B075838 | PLATE-27 | B077251 | PLATE-31 |
| B074539 | PLATE-28 | B075861 | PLATE-38 | B077331 | PLATE-39 |
| B074539 | PLATE-29 | B075862 | PLATE-35 | B077333 | PLATE-35 |
| B074588R | PLATE-22 | B075982 | PLATE-35 | B077333 | PLATE-36 |
| B074588R | PLATE-24 | B076036 | PLATE-34 | B077358 | PLATE-30 |
| B074590R | PLATE-22 | B076036 | PLATE-34 | B077458 | PLATE-24 |
| B074590R | PLATE-24 | B076050BW | PLATE-30 | B077458 | PLATE-24 |
| B074851 | PLATE-38 | B076050CB | PLATE-30 | B077461 | PLATE-25 |
| B074905 | PLATE-23 | B076050CO | PLATE-30 | B077465 | PLATE-25 |
| B074999 | PLATE-27 | B076050EG | PLATE-30 | B077469 | PLATE-23 |
| B075043 | PLATE-35 | B076050GY | PLATE-30 | B077470 | PLATE-23 |
| B075102 | PLATE-40 | B076050SY | PLATE-30 | B077481 | PLATE-24 |
| B075108 | PLATE-31 | B076078 | PLATE-34 | B077513 | PLATE-38 |
| B075186ED | PLATE-30 | B076098ED | PLATE-20 | B077643 | PLATE-35 |
| B075253 | PLATE-19 | B076112 | PLATE-8 | B077882 | PLATE-38 |
| B075254 | PLATE-40 | B076120 | PLATE-29 | B078002 | PLATE-31 |
| B075255 | PLATE-23 | B076142 | PLATE-40 | B078003 | PLATE-31 |
| B075313 | PLATE-26 | B076164 | PLATE-23 | B078213 | PLATE-31 |
| B075327 | PLATE-38 | B076200 | PLATE-35 | B078272 | PLATE-29 |
| B075337 | PLATE-19 | B076201 | PLATE-35 | B078274 | PLATE-29 |
| B075426 | PLATE-38 | B076202 | PLATE-35 | B078286R | PLATE-29 |
| B075459 | PLATE-18 | B076203 | PLATE-35 | CM166102 | PLATE-7 |
| B075488 | PLATE-27 | B076208 | PLATE-34 | CM166103 | PLATE-7 |
| B075489 | PLATE-27 | B076226 | PLATE-21 | CM167704 | PLATE-7 |
| B075492 | PLATE-27 | B076290 | PLATE-24 | CM167708 | PLATE-7 |

| | | |
|---|---|---|
| | | |

118